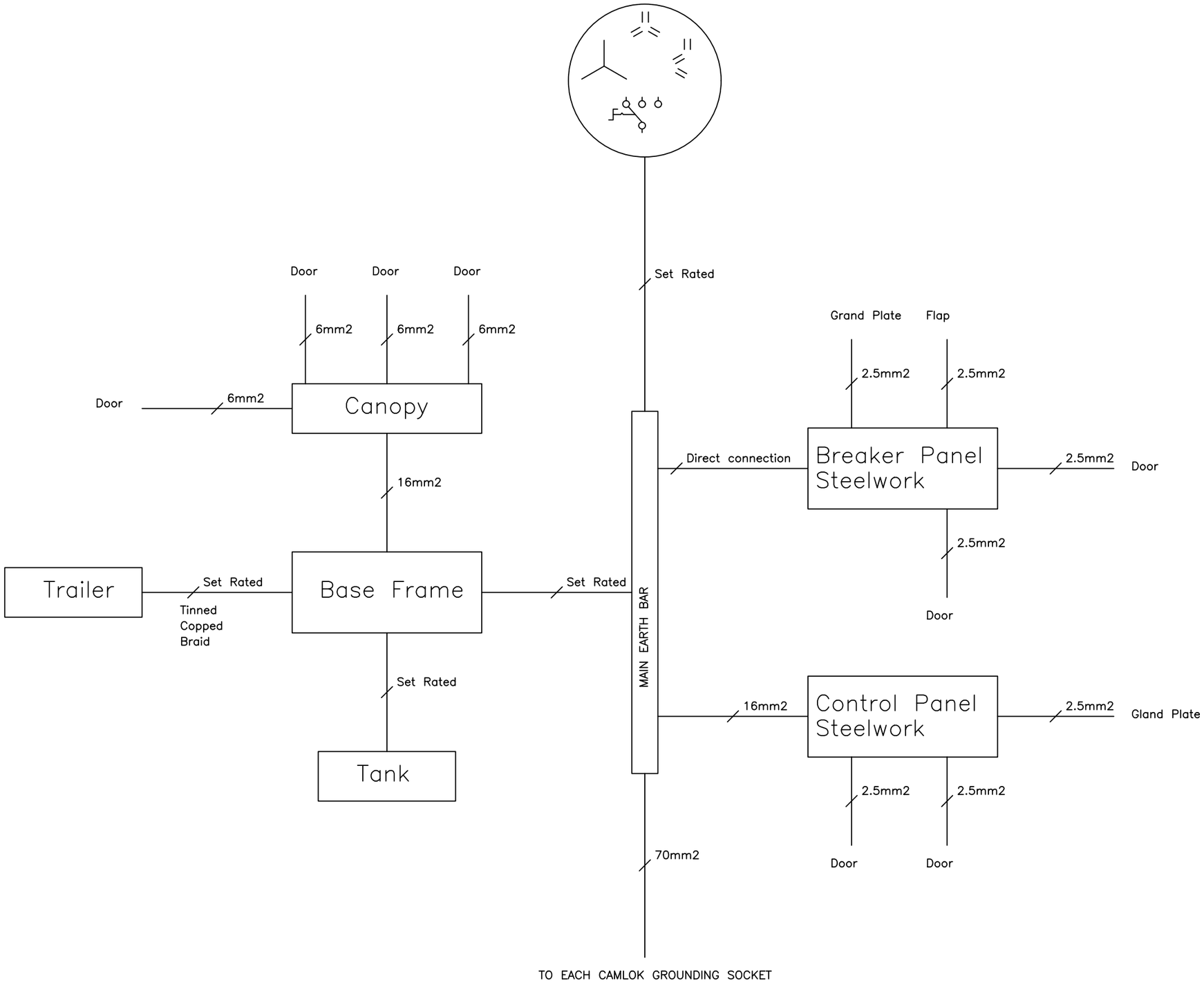

OUTPUT CIRCUIT GROUNDING

GENSET	SET RATING
G70RST4F	= 35 mm2
G125RST4F	= 35 mm2
G220RST4F	= 70 mm2
G400RST4F	= 95 mm2
G625RST4F	= 150 mm2

DIRECT CONNECTION

GENSET	SET RATING
G70RST4F	= 60X10 COPPER BAR
G125RST4F	= 60X10 COPPER BAR
G220RST4F	= 60X10 COPPER BAR
G400RST4F	= 80X8 COPPER BAR
G625RST4F	= 80X8 COPPER BAR

TITLE:	TF4 EARTH SCHEMATICS		
SCALE:	NTS		
SHEET:	1	DATE:	
DRAWING NO.			ISSUE
401/H2922			1

JCB POWER PRODUCTS

JCB Power Products Limited
Airfield Industrial Estate, Hixon, Stafford,
ST18 0PF, United Kingdom.
tel: +44 (0) 1889 272 200

www.jcbpowerproducts.com