A48D Helpfile

USER MANUAL

© 2026 JCB INDIA LTD
Ravi Dogne

This page is intentionally left blank.
Remove this text from the manual
template if you want it completely blank.

1. Introduction 17

1.1 Contents 19

2. Machine Details 21

2.1 CAN Layout 23

2.2 Harness Layout 23

2.3 Battery Lead Layout 24

2.4 Machine Structural Overview 25

2.5 Earth Point Locations 33

2.5.1 Earth Point Platform 33

2.5.2 Earth Point Turn Table 34

2.5.3 Earth Point Chassis 35

2.5.4 Earth Point Generator 36

3. System Level Function 39

3.1 Ignition 41

3.2 Horn 43

3.3 Electric Pump 45

3.4 Emergency Stop 49

3.5 Engine Start & Stop 52

3.6 Grid Heater 55

3.7 Engine Speed 58

3.8 Engine Alternator 60

3.9 Air Filter Blocked 64

3.10 Crush Protection System 66

3.11 High Torque 69

3.12 Steering 72

3.13 Slew 76

3.14 Limit Switch Position 80

3.15 Platform Rotate 80

3.16 Overload 84

3.17 Main Boom 88

3.18 Leveling 92

3.19 Jib 95

3.20 Tilt 98

© 2026 JCB INDIA LTD

3.21 Telescope 100
3.22 Articulate 104
3.23 Generator 107
3.24 Fuel Level 109
3.25 Oscillating Axle 112
3.26 Override 115
3.27 Drive 116
3.28 Display Functions 119
3.28.1 Setting Time 119
3.28.2 Setting Date 121
3.28.3 Setting Units 122
3.28.4 Setting Brightness 123
3.28.5 Speed Configuration 125
3.28.6 Setting Travel Alarm 127
3.28.7 Setting Language 128
3.28.8 Setting Load Cell Calibration 130

4. Components 133

4.1 PF01 Electric Pump 136
4.2 PF02 Control System Primary 139
4.3 PF03 Grid Heater 142
4.4 Water In Fuel Sensor (WIF) 145
4.5 Fuel Pump 149
4.6 Fuel Level Sensor 153
4.7 Air Filter Vacuum Switch 157
4.8 Grid Heater 160
4.9 Grid Heater Relay 163
4.10 Main Boom Lower Limit switch 166
4.11 Main Boom Telescope retract Limit switch 172
4.12 Articulated Boom Lower Limit Switch 176
4.13 Slew Position Limit Switch 180
4.14 Alternator & Resistor 185
4.15 Engine POD Box 189
4.16 Work Light (Optional Fit) 193
4.17 Batteries 198
4.18 White Noise Alarm 205

© 2026 JCB INDIA LTD

4.19 Beacon 208
4.20 Isolator 212
4.21 Kohler Engine ECU 215
4.22 Horn 218
4.23 Axle Lock Pressure Sensor 223
4.24 Platform and Jib Valve Block 228
4.25 Weight Sensor 232
4.26 DC Contactor 238
4.27 Tilt Sensor 242
4.28 Slew Limit Switch 246
4.29 Main Valve Block 249
4.30 Brake Valve Block 262
4.31 Electric Pump 268
4.32 Hydraulic Generator 271
4.33 AC Connector 276
4.34 Diagnostic Connector 279
4.35 Customer Telematics 284
4.36 LiveLink ECU 288
4.37 Base Bosch ECU 292
4.38 Transmission Pump 304
4.39 CAN Network 308
4.40 Platform & Control Panel 312
4.40.1 Foot Pedal Switch 313
4.40.2 Crush Protection 317
4.40.3 Platform Control Panel 321
4.40.4 Platform ECU 325
4.40.5 Platform Buzzer 338
4.40.6 Drive and Steer Joystick 342
4.40.7 Slew & Main Boom Up/Down Joystick 345
4.40.8 Main Boom Telescope Extend/Retract Switch(PCP) 348
4.40.9 Articulated Raise/Lower Switch(PCP) 352
4.40.10 Jib Up/Down Switch(PCP) 357
4.40.11 Platform Rotate Left/Right Switch(PCP) 361
4.40.12 Platform Leveling Up/Down Switch(PCP) 367
4.40.13 Potentiometer 371
4.40.14 Slew Acknowledgement Switch with LED 374
4.40.15 Horn Switch(PCP) 378

© 2026 JCB INDIA LTD

4.40.16 Emergency Stop Switch(PCP) 381
4.40.17 Engine Start Switch(PCP) 383
4.40.18 High Torque Selection Switch with LED 386
4.40.19 High Speed Switch with LED 389
4.40.20 Hydraulic Generator Switch with LED 392
4.40.21 Worklight Switch with LED 395
4.40.22 Electric Pump Switch (AUX) 399
4.40.23 Power LED 402
4.40.24 User Caution LED 405
4.40.25 Fault LED 408
4.40.26 Tilt Sensor LED 410
4.40.27 Overload LED 412
4.40.28 Low Fuel Level LED 415
4.40.29 PCP Interface Connectors 418
4.40.30 Jumper Bars 422
4.40.31 Din Rail Terminals - Small 425
4.40.32 USB Connection 433
4.41 Turntable Control Panel 436
4.41.1 Ignition Relay 436
4.41.2 Horn Relay 440
4.41.3 D+ Relay 443
4.41.4 Fusing Turntable Control Panel 447
4.41.5 Large Jumper Bar 456
4.41.6 Ignition Switch 460
4.41.7 Emergency STOP Switch(TCP) 464
4.41.8 Slew Switch(TCP) 468
4.41.9 Horn Switch(TCP) 472
4.41.10 Large Din Rail Terminal 476
4.41.11 Engine Start Switch(TCP) 481
4.41.12 Base/Platform Enable Switch 485
4.41.13 Main Boom Raise/Lower Switch(TCP) 489
4.41.14 Articulated Boom Raise/Lower switch(TCP) 493
4.41.15 Jib Raise/Lower Switch(TCP) 496
4.41.16 Main Boom Telescope Extend/Retract Switch(TCP) 500
4.41.17 Platform Rotate Left/Right Switch(TCP) 503
4.41.18 Platform Leveling Raise/Lower Switch(TCP) 507
4.41.19 Over Ride Switch 510
4.41.20 Buzzer(TCP) 515
4.41.21 Display 7'' 518
4.41.22 TCP Interface Connector 522

© 2026 JCB INDIA LTD

5. Machine Fault Codes 531

5.1 DTC ERROR CODE 532

5.1.1 B1001-17 544
5.1.2 B1005-17 545
5.1.3 B1006-17 546
5.1.4 B1007-16 547
5.1.5 B1008-16 549
5.1.6 B1009-16 550
5.1.7 B1010-13 551
5.1.8 B1011-17 553
5.1.9 B1012-17 554
5.1.10 B1013-16 555
5.1.11 B1014-13 556
5.1.12 B1015-16 557
5.1.13 B1016-92 558
5.1.14 B1017-17 559
5.1.15 B1018-16 560
5.1.16 B1019-17 562
5.1.17 B1020-17 563
5.1.18 B1021-16 564
5.1.19 B1022-13 566
5.1.20 B1023-16 567
5.1.21 B1024-92 568
5.1.22 B1025-13 569
5.1.23 B1026-17 570
5.1.24 B1027-16 571
5.1.25 B1028-16 572
5.1.26 B1029-17 573
5.1.27 B1030-17 574
5.1.28 B1031-16 575
5.1.29 B1032-13 576
5.1.30 B1033-17 577
5.1.31 B1034-16 578
5.1.32 B1035-13 579
5.1.33 B1036-17 581
5.1.34 B1037-16 582
5.1.35 B1038-13 583
5.1.36 B1039-17 584
5.1.37 B1040-16 585
5.1.38 B1041-17 586

© 2026 JCB INDIA LTD

5.1.39 B1042-16 587
5.1.40 B1043-17 588
5.1.41 B1044-16 589
5.1.42 B1045-13 590
5.1.43 B1046-17 591
5.1.44 B1047-16 592
5.1.45 B1048-17 593
5.1.46 B1049-16 595
5.1.47 B1050-17 596
5.1.48 B1051-16 597
5.1.49 B1052-24 598
5.1.50 B1053-17 599
5.1.51 B1054-16 601
5.1.52 B1055-17 602
5.1.53 B1056-16 603
5.1.54 B1058-17 604
5.1.55 B1059-16 605
5.1.56 B1060-13 606
5.1.57 B1061-17 607
5.1.58 B1062-16 608
5.1.59 B1063-92 609
5.1.60 B1064-17 611
5.1.61 B1065-16 612
5.1.62 B1066-24 613
5.1.63 B1067-17 614
5.1.64 B1069-17 615
5.1.65 B1070-16 617
5.1.66 B1071-17 618
5.1.67 B1072-17 619
5.1.68 B1073-92 620
5.1.69 B1074-16 621
5.1.70 B1075-16 622
5.1.71 B1076-17 623
5.1.72 B1077-16 624
5.1.73 B1078-13 625
5.1.74 B1079-17 626
5.1.75 B1080-17 627
5.1.76 B1081-16 628
5.1.77 B1082-13 628
5.1.78 B1083-17 630
5.1.79 B1084-17 630

© 2026 JCB INDIA LTD

5.1.80 B1086-13 631
5.1.81 B1087-17 632
5.1.82 B1088-17 633
5.1.83 B1089-16 634
5.1.84 B1090-13 634
5.1.85 B1091-17 635
5.1.86 B1092-17 636
5.1.87 B1093-16 637
5.1.88 B1094-13 638
5.1.89 B1095-92 639
5.1.90 B1096-17 639
5.1.91 B1097-17 640
5.1.92 B1098-92 641
5.1.93 B1099-16 643
5.1.94 B1100-16 644
5.1.95 B1101-17 645
5.1.96 B1102-17 646
5.1.97 B1103-92 647
5.1.98 B1104-16 649
5.1.99 B1105-16 651
5.1.100 B1106-17 652
5.1.101 B1107-17 653
5.1.102 B1108-92 655
5.1.103 B1109-16 656
5.1.104 B1110-16 658
5.1.105 B1111-17 660
5.1.106 B1112-17 661
5.1.107 B1113-92 662
5.1.108 B1114-16 664
5.1.109 B1115-16 666
5.1.110 B1116-17 667
5.1.111 B1117-17 669
5.1.112 B1118-92 670
5.1.113 B1119-16 671
5.1.114 B1120-16 673
5.1.115 B1121-17 675
5.1.116 B1122-17 676
5.1.117 B1123-92 678
5.1.118 B1124-16 679
5.1.119 B1125-16 681
5.1.120 B1126-17 682

© 2026 JCB INDIA LTD

5.1.121 B1127-17 683
5.1.122 B1128-16 684
5.1.123 B1129-13 685
5.1.124 B1130-16 687
5.1.125 B1131-2F 689
5.1.126 B1133-17 690
5.1.127 B1134-16 691
5.1.128 B1135-13 693
5.1.129 B1136-16 694
5.1.130 B1138-17 695
5.1.131 B1139-17 696
5.1.132 B1140-16 697
5.1.133 B1141-13 698
5.1.134 B1142-16 699
5.1.135 B1143-92 701
5.1.136 B1144-17 702
5.1.137 B1145-16 703
5.1.138 B1146-17 704
5.1.139 B1147-16 705
5.1.140 B1148-17 706
5.1.141 B1149-16 708
5.1.142 B1150-17 709
5.1.143 B1151-16 710
5.1.144 B1154-16 712
5.1.145 B1167-13 713
5.1.146 B1168-16 714
5.1.147 B1169-13 715
5.1.148 B1170-16 716
5.1.149 B1171-13 717
5.1.150 B1172-16 718
5.1.151 B1173-13 719
5.1.152 B1174-16 720
5.1.153 B1175-13 721
5.1.154 B1176-16 722
5.1.155 B1177-16 723
5.1.156 B1178-13 725
5.1.157 B1179-13 726
5.1.158 B1180-16 728
5.1.159 B1181-16 729
5.1.160 B1182-13 730
5.1.161 B1183-16 731

© 2026 JCB INDIA LTD

5.1.162 B1184-13 733
5.1.163 B1186-16 734
5.1.164 B1187-13 735
5.1.165 B1188-16 737
5.1.166 B1189-13 738
5.1.167 B1190-16 739
5.1.168 B1191-17 740
5.1.169 B1192-16 741
5.1.170 B1193-13 743
5.1.171 B1194-16 744
5.1.172 B1195-13 745
5.1.173 B1196-16 746
5.1.174 B1197-13 747
5.1.175 B1198-16 748
5.1.176 B1199-17 750
5.1.177 B1202-16 751
5.1.178 B1203-13 752
5.1.179 B1204-16 753
5.1.180 B1205-13 754
5.1.181 B1206-17 755
5.1.182 B1207-16 757
5.1.183 B1208-24 758
5.1.184 B1209-17 759
5.1.185 B1210-16 760
5.1.186 B1211-24 761
5.1.187 B1212-17 762
5.1.188 B1213-16 764
5.1.189 B1214-24 765
5.1.190 B1215-17 766
5.1.191 B1216-16 767
5.1.192 B1217-24 768
5.1.193 B1221-17 769
5.1.194 B1222-16 772
5.1.195 B1223-17 774
5.1.196 B1224-16 776
5.1.197 B1225-2F 778
5.1.198 B1227-17 780
5.1.199 B1228-16 782
5.1.200 B1232-17 783
5.1.201 B1233-16 784
5.1.202 B1235-17 785

© 2026 JCB INDIA LTD

5.1.203 B1236-2F 786
5.1.204 B1238-2F 788
5.1.205 B1239-17 790
5.1.206 B1240-16 791
5.1.207 B1241-24 792
5.1.208 B1242-17 793
5.1.209 B1243-17 794
5.1.210 B1244-92 795
5.1.211 B1245-16 796
5.1.212 B1246-16 797
5.1.213 B1247-17 799
5.1.214 B1248-17 800
5.1.215 B1249-92 801
5.1.216 B1250-16 802
5.1.217 B1251-16 803
5.1.218 B1252-17 804
5.1.219 B1253-17 805
5.1.220 B1254-92 806
5.1.221 B1255-16 807
5.1.222 B1256-16 808
5.1.223 B1257-17 809
5.1.224 B1258-17 810
5.1.225 B1259-92 811
5.1.226 B1260-16 813
5.1.227 B1261-16 814
5.1.228 B1262-17 815
5.1.229 B1263-17 816
5.1.230 B1264-92 817
5.1.231 B1265-16 818
5.1.232 B1266-16 819
5.1.233 B1267-17 821
5.1.234 B1268-16 822
5.1.235 B1269-16 824
5.1.236 B1270-17 825
5.1.237 B1272-2F 826
5.1.238 B1273-17 828
5.1.239 B1274-16 829
5.1.240 B1275-24 830
5.1.241 B1276-24 831
5.1.242 B1277-24 832
5.1.243 B1278-17 834

© 2026 JCB INDIA LTD

5.1.244 B1279-16 836
5.1.245 B1281-16 837
5.1.246 B1282-13 839
5.1.247 B1283-16 840
5.1.248 B1284-16 841
5.1.249 B1285-16 842
5.1.250 B1286-16 843
5.1.251 B1287-2F 844
5.1.252 B1288-2F 845
5.1.253 B1300-2F 846
5.1.254 B1301-2F 848
5.1.255 B1302-2F 849
5.1.256 B1303-2F 850
5.1.257 B1304-24 852
5.1.258 B1305-24 852
5.1.259 B1306-24 853
5.1.260 B1307-24 854
5.1.261 B1308-24 855
5.1.262 B1309-24 857
5.1.263 B1310-24 859
5.1.264 B1311-24 860
5.1.265 B1312-24 860
5.1.266 B1313-24 861
5.1.267 B1314-24 862
5.1.268 B1315-24 863
5.1.269 B1316-24 864
5.1.270 B1317-24 865
5.1.271 B1318-24 868
5.1.272 B1319-24 869
5.1.273 B1320-24 871
5.1.274 B1321-24 873
5.1.275 B1329-13 874
5.1.276 B1330-16 876
5.1.277 B1331-13 877
5.1.278 B1332-17 879
5.1.279 B1333-16 879
5.1.280 B1334-13 880
5.1.281 B1335-17 881
5.1.282 B1336-16 883
5.1.283 B1337-13 884
5.1.284 B1338-17 885

© 2026 JCB INDIA LTD

5.1.285 B1339-16 887
5.1.286 B1340-13 888
5.1.287 B1341-17 890
5.1.288 B1342-16 890
5.1.289 B1344-17 891
5.1.290 B1345-16 892
5.1.291 B1347-17 893
5.1.292 B1348-16 895
5.1.293 B1349-13 896
5.1.294 B1350-17 898
5.1.295 B1351-16 899
5.1.296 B1353-16 900
5.1.297 B1354-13 901
5.1.298 B1355-16 902
5.1.299 B1356-13 903
5.1.300 B1357-16 904
5.1.301 B1358-13 905
5.1.302 B1541-13 906
5.1.303 B1681-13 908
5.1.304 B1682-13 909
5.1.305 B1694-17 911
5.1.306 B1695-16 912
5.1.307 B1696-13 913
5.1.308 B1697-92 914
5.1.309 U0073-87 915
5.1.310 U0411-87 916
5.1.311 U1001-87 917
5.1.312 U1293-87 918
5.1.313 U1294-56 920
5.1.314 U1295-41 923
5.1.315 U1296-87 925
5.1.316 U1298-41 927
5.1.317 U1297-56 929
5.1.318 U1299-87 931
5.1.319 U1323-56 933
5.1.320 U1324-56 936
5.1.321 U1325-56 938
5.1.322 U1326-41 940
5.1.323 U1327-41 942
5.1.324 U1328-41 944
5.1.325 U1900-16 946

© 2026 JCB INDIA LTD

5.1.326 U1901-16 947
5.1.327 U1904-85 948
5.1.328 U1905-84 948
5.1.329 U1906-96 949
5.1.330 U1907-09 949
5.1.331 U1908-09 950
5.1.332 U1909-96 951
5.1.333 U190A-09 952
5.1.334 U190B-96 953
5.1.335 U190C-96 954
5.2 General Sensor Fault Table (2) 955
5.2.1 General Sensor Fault Table (2) 956
5.3 Fault Code Types 957
5.3.1 Fault Code Types 957

6. Machine Setup & Calibration 965

6.1 Machine Setup 966
6.1.1 VIN Number 966
6.2 Machine Calibration from Service Master 968
6.2.1 Load Calibration 968
6.3 Machine Calibration from Display 970
6.3.1 Known Load Calibration 970
6.4 Tilt Sensor Calibration 976
6.4.1 Tilt Sensor Calibration 976
6.5 Flashing of Controller 979
6.5.1 Display Flashing 980
6.5.2 Flashing Base & Platform Controller 982

7. Service Master Tools Help 989

7.1 Install Software - Service Master 990
7.2 Using JCB Service Master 992
7.3 Using DLA (Data Link Adapter) 993
7.4 Diagnostic Tool 998
7.5 Flashloader Tool 999

Index 0

© 2026 JCB INDIA LTD

This page is intentionally left blank.
Remove this text from the manual
template if you want it completely blank.

Introduction

1 Introduction

Introduction

List of Introduction 18

Sr Number	Component
1	Contents 19



AJ48D HELPFILE

© 2026 JCB INDIA LTD

1.1 Contents

Contents

Introduction 18 > Contents

Contents

Sr Number	Component
1	Machine Details 22
2	System Level Function 40
3	Components 134
4	Machine Fault Codes 532
5	Software Flashing 966
6	Service Master Tool Help 990

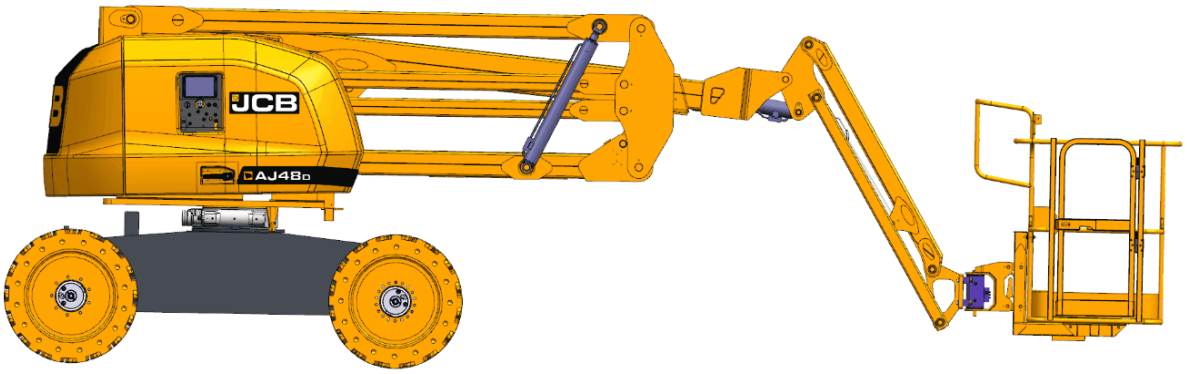

© 2026 JCB INDIA LTD

This page is intentionally left blank.
Remove this text from the manual
template if you want it completely blank.

Machine Details

2 Machine Details

Machine Details



List of Machine Details 22

Sr Number	Component
1	Can Layout 23
2	Harness Layout 23
3	Battery Lead Layout 24
4	Machine Structural Overview 25
5	Earth Point Location 33

© 2026 JCB INDIA LTD

2.1 CAN Layout



Machine Details 22 > CAN Layout

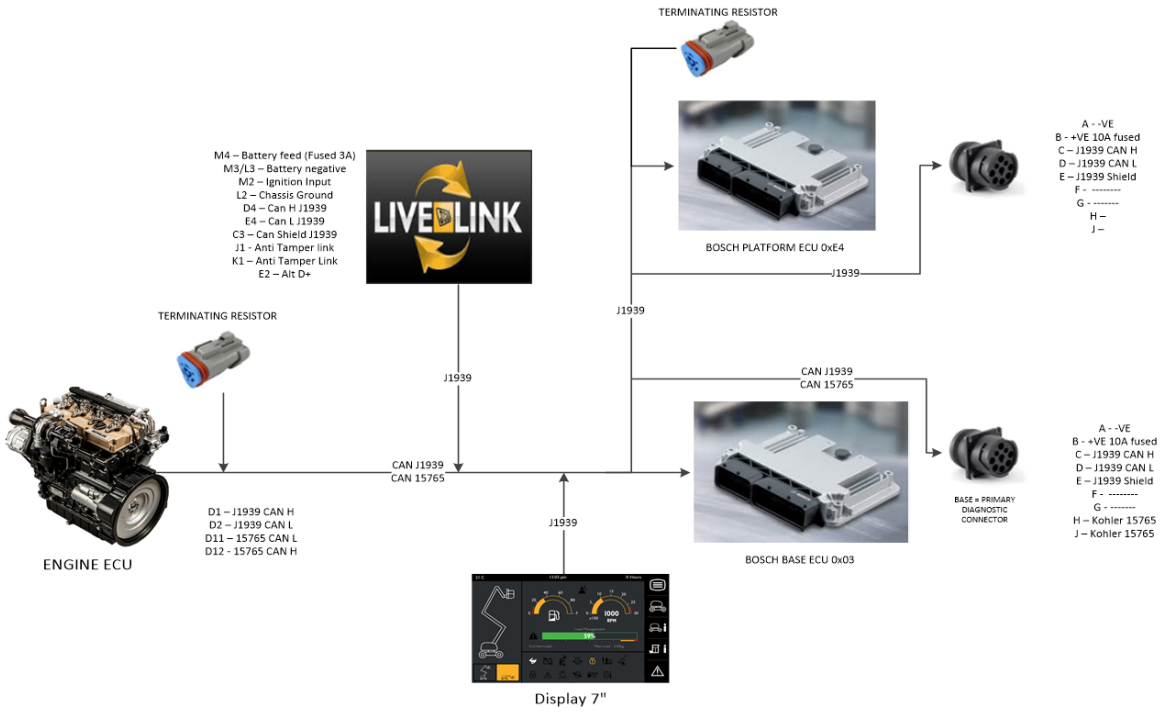

2.2 Harness Layout



Machine Details 22 > Harness Layout

© 2026 JCB INDIA LTD

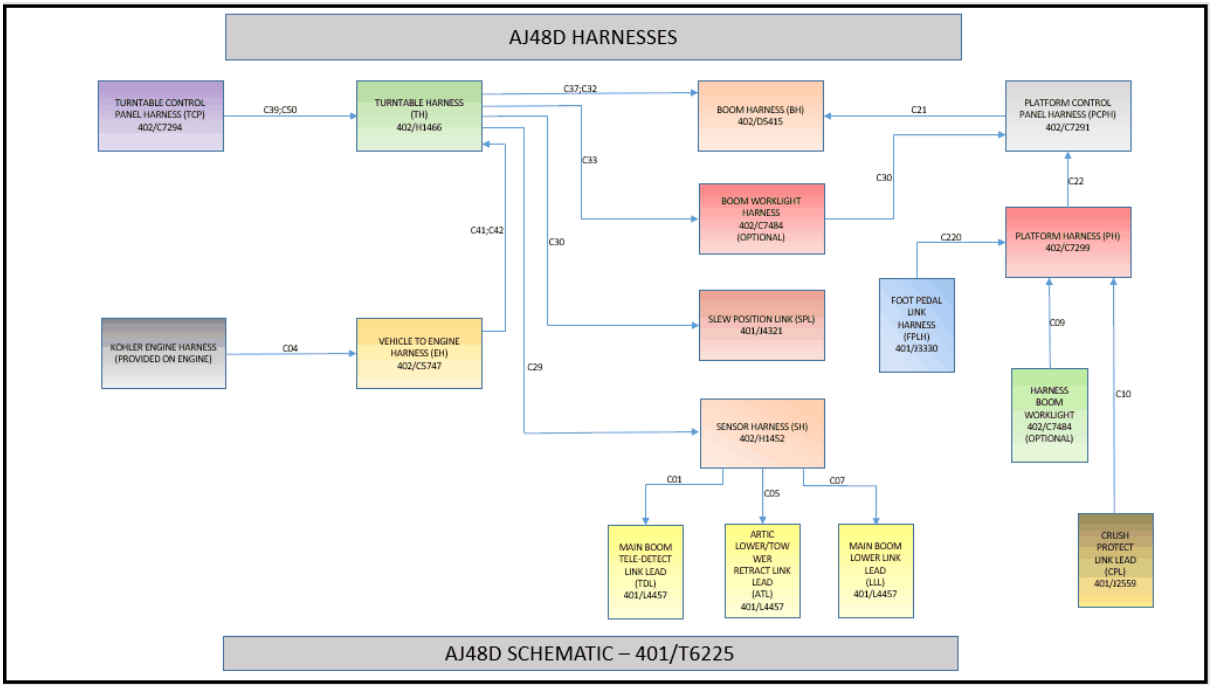

2.3 Battery Lead Layout



Machine Details 22 > Battery Lead Layout

© 2026 JCB INDIA LTD

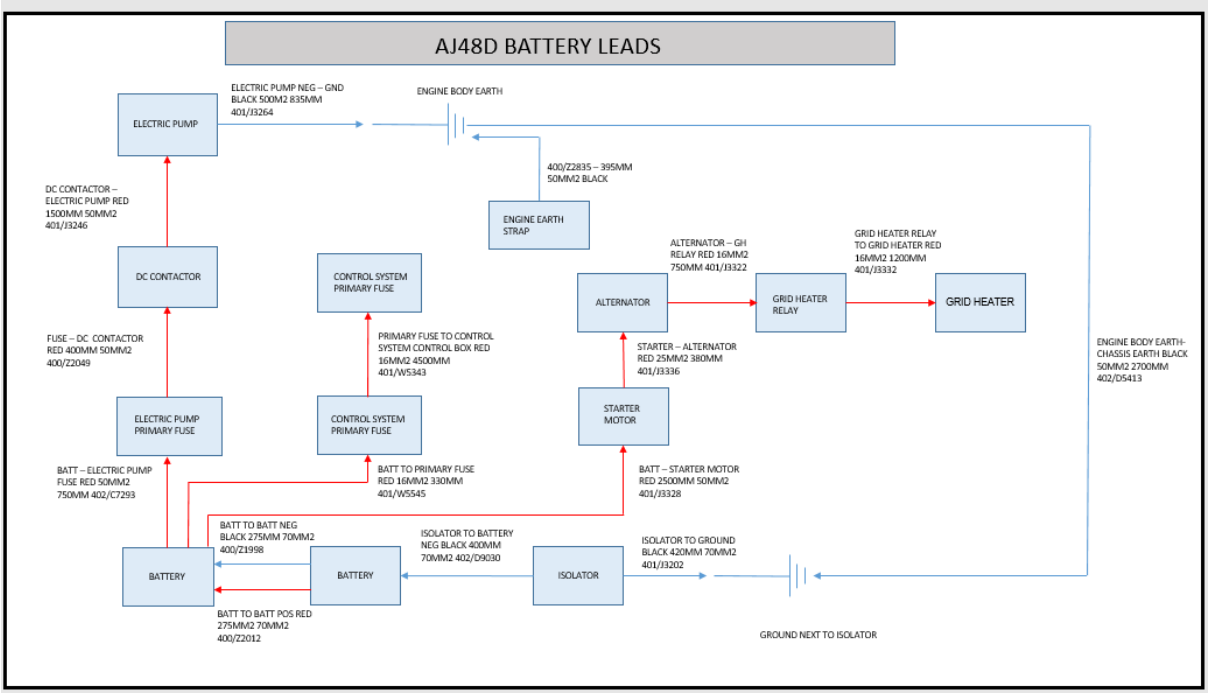

2.4 Machine Structural Overview

Machine Structural Overview

© 2026 JCB INDIA LTD

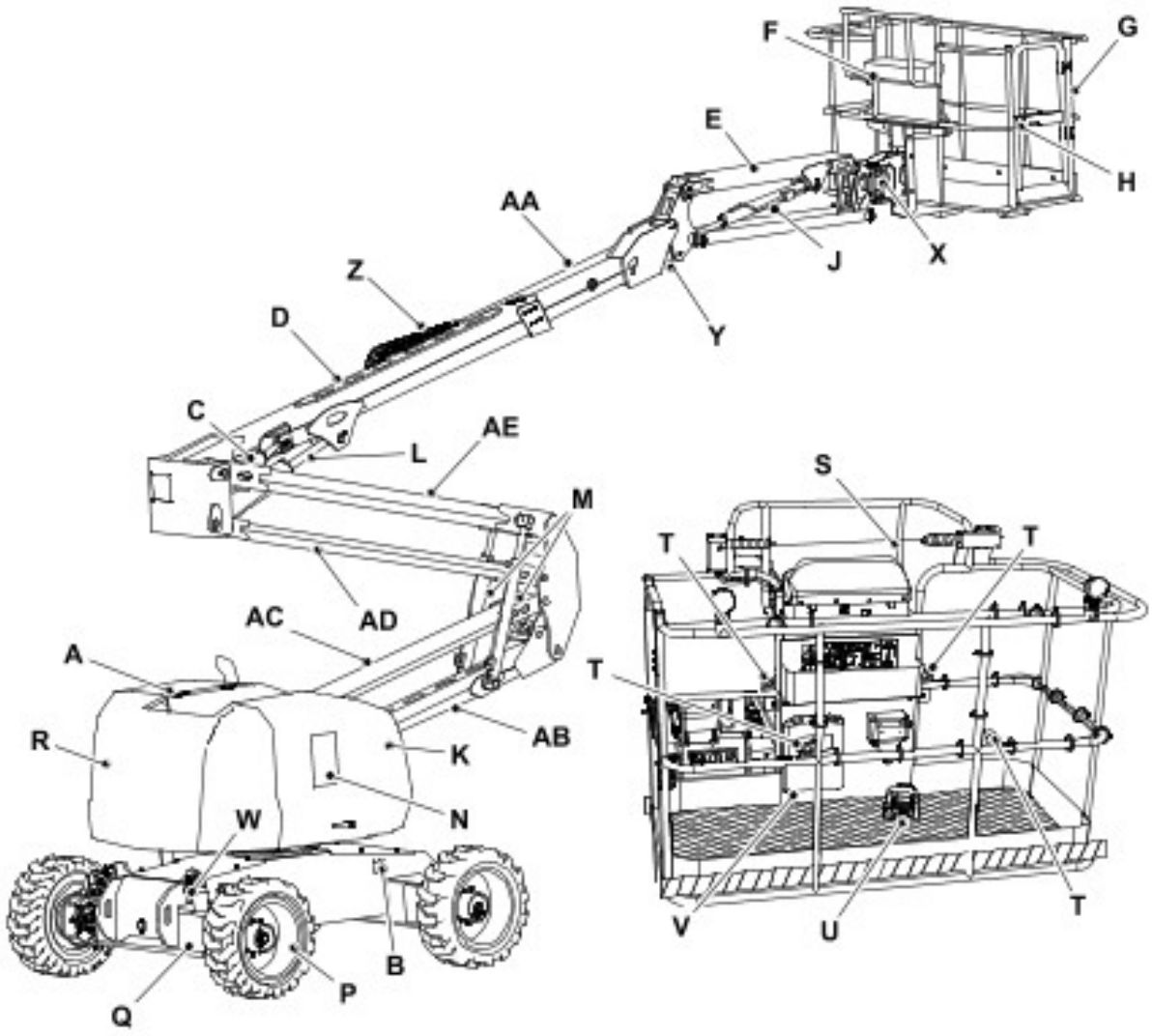

A	Engine canopy	**R**	Counter weight
B	Battery isolator	**S**	Secondary guarding system
C	Lower leveling cylinder	**T**	Safety harness anchorage point
D	Telescopic boom (Stage 1)	**U**	Foot pedal switch
E	Jib	**V**	Documents box
F	Platform controller	**W**	Oscillating axle cylinder
G	Work platform	**X**	Rotary actuator
H	Platform entry gate	**Y**	Upper leveling cylinder
J	Jib lift cylinder	**Z**	Drag chain
K	Control side canopy	**AA**	Telescopic boom (Stage 2)
L	Telescopic boom lift cylinder	**AB**	Articulated boom (Stage 1)
M	Articulated boom lift cylinder	**AC**	Articulated boom (Stage 2)

© 2026 JCB INDIA LTD

N	Base control panel	**AD**	Articulated boom (Stage 3)
P	Wheel	**AE**	Articulated boom (Stage 4)
Q	Front axle		

RHS Canopy Overview

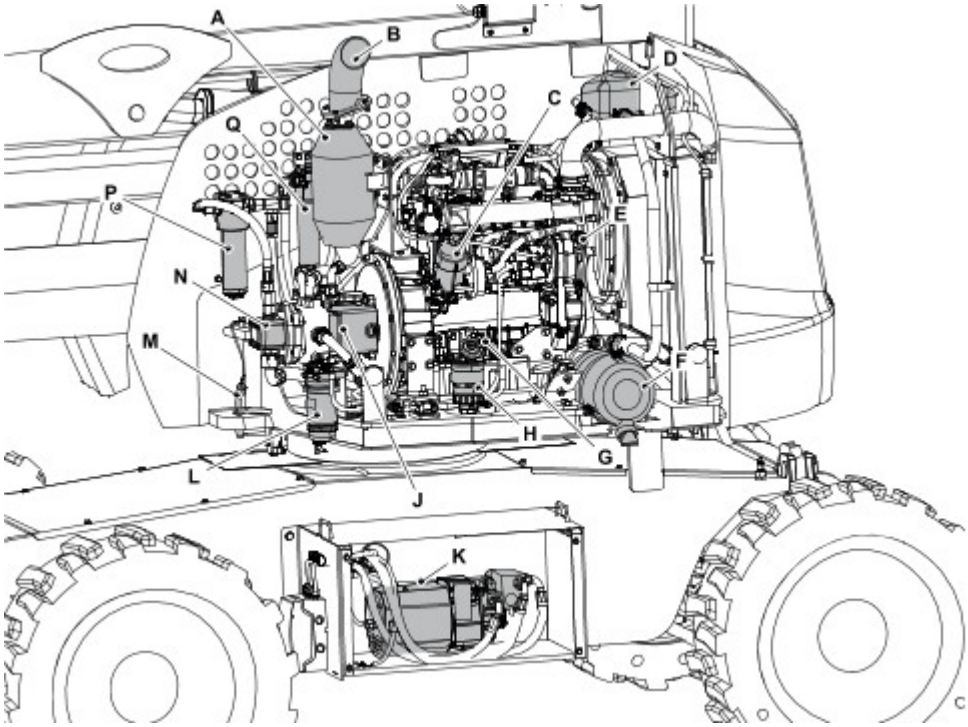

A	Engine exhaust	**J**	Hydraulic transmission pump
B	Exhaust outlet pipe	**K**	Hydraulic generator (optional)
C	Oil filter	**L**	Fuel pre-filter
D	Coolant expansion bottle	**M**	Locking pin
E	Oil filler	**N**	Hydraulic boom pump
F	Air cleaner	**P**	Hydraulic high pressure filter
G	Dipstick	**Q**	Charge pump filter
H	Engine fuel filter		

LHS Canopy Overview

© 2026 JCB INDIA LTD

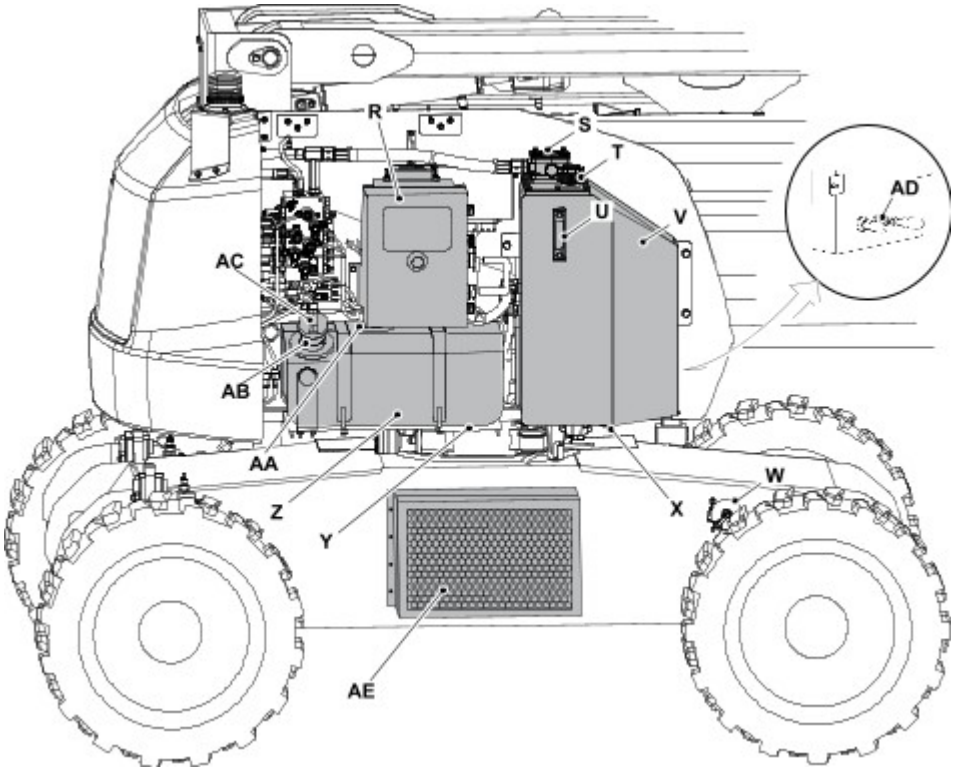

R	Base control panel	**Y**	Fuel tank drain plug
S	Return line filter	**Z**	Fuel tank
T	Filler breather	**AA**	Fuel sender
U	Level gauge/ oil temperature	**AB**	Fuel filler
V	Hydraulic tank	**AC**	Fuel filler cap
W	Battery isolator	**AD**	Suction strainer
X	Hydraulic tank drain plug	**AE**	Hot weather kit (Not applicable for US market)

Base Control Overview

© 2026 JCB INDIA LTD

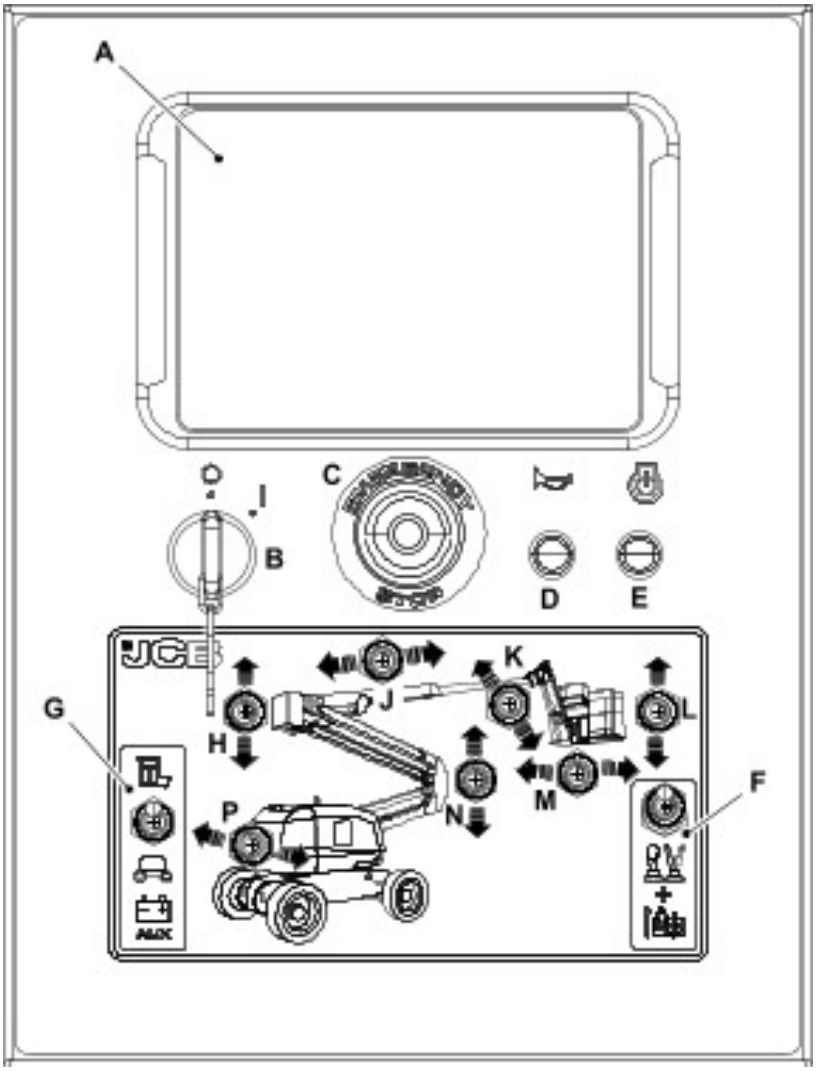

A	Base control display	**H**	Main boom raise/lower switch
B	Ignition switch	**J**	Telescopic boom extend/retract switch
C	Emergency stop button	**K**	Jib raise/lower switch
D	Horn button	**L**	Platform level switch
E	Engine start/stop button	**M**	Platform rotate switch
F	Emergency override switch	**N**	Articulated boom raise/lower switch
G	Base control enable switch	**P**	Slew left/right switch

Base Display

© 2026 JCB INDIA LTD

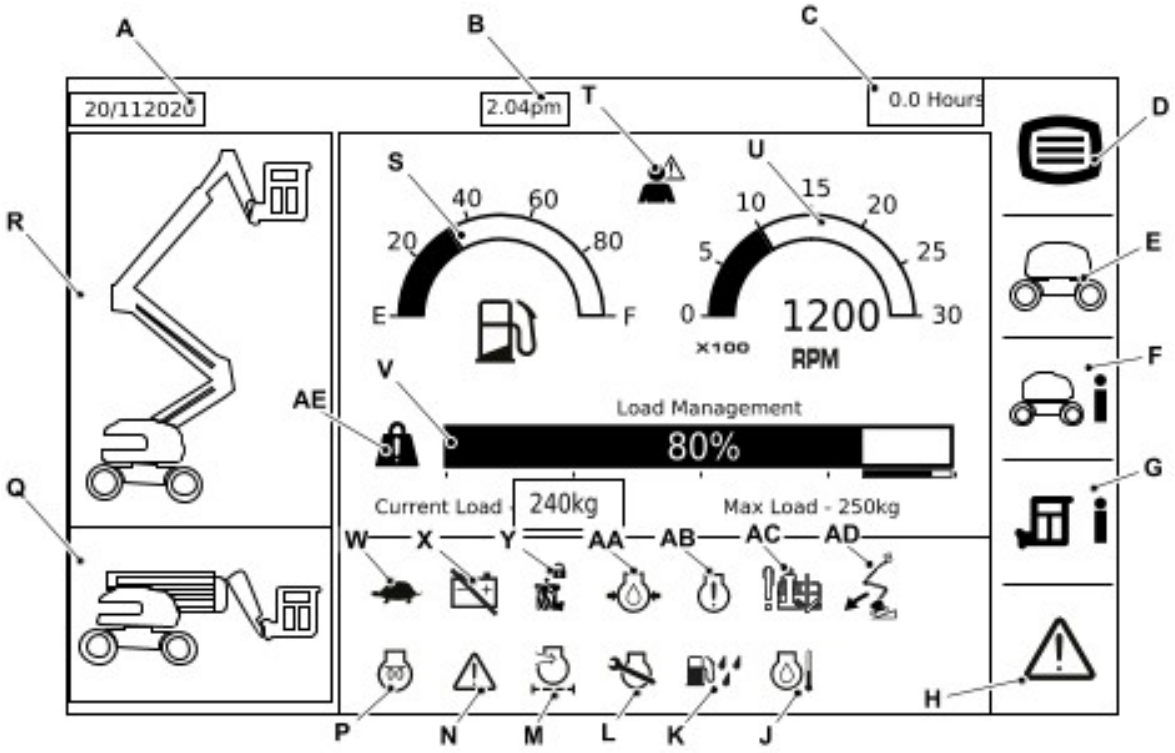

Callout	Indicator	Description
A	Date	Displays current date.
B	Time	Displays current time.
C	Machine hour	Displays machine running hours.
D	Sub-menu button for Display Settings	Displays settings for the display.
E	Sub-menu button for Machine Settings	Displays various settings of the machine.
F	Sub-menu button for Base information	Displays base information of machine like input, output and machine information.
G	Sub-menu button for Platform information	Displays platform input/output information.
H	Sub-menu button for Faults	Displays live and historic faults.
J	Coolant temperature	Displays when coolant temperature is high.
K	Water in fuel	Displays if moisture is detected in fuel.
L	Service indicator	Displays when the engine service is due.
M	Blocked air filter	Displays when the engine air filter is blocked.
N	Fault indicator	Displays when there is a fault on the machine.
P	Engine pre-heater	Applicable for machines fitted with grid heater. Displays active engine pre-heat before cranking of engine.
Q	Machine stowed position	Displays when machine is in stowed position.
R	Machine raised position	Displays when machine is in raised position.

© 2026 JCB INDIA LTD

S	Fuel level indicator	Displays the level of diesel fuel in the tank. Do not let the tank run dry; air will enter the fuel system. Do not run the engine if the indicator needle goes into the red area. First segment of fuel gauge blinks to show reserve capacity.
T	Operator error or caution alarm	Displays when machine is operated outside the limits.
U	Engine speed indicator	Displays the engine RPM (Revolutions Per Minute).
V	Platform load indicator	Displays the amount of load, machine is carrying in percentage.
W	Engine mode	Displays engine high or low RPM.
X	Alternator indicator	Displays if there is a battery charging circuit fault while the engine is running.
Y	Secondary guarding	Displays when the platform secondary guarding is activated.
AA	Engine oil pressure	Displays if the engine oil pressure is too low.
AB	Engine warning indicator	Displays during fault state of engine.
AC	Emergency mode used	Displays when emergency override has been activated.
AD	Tilt limit exceeded	Displays when machine tilt limit is exceeded. Solid lamp if the machine is stowed. Flashing lamp if the machine is raised.
AE	Overload indicator	Displays when the platform load limit is exceeded. Solid lamp if the load is approaching the limit. Flashing lamp if the load is above the limit.

Platform Control Overview

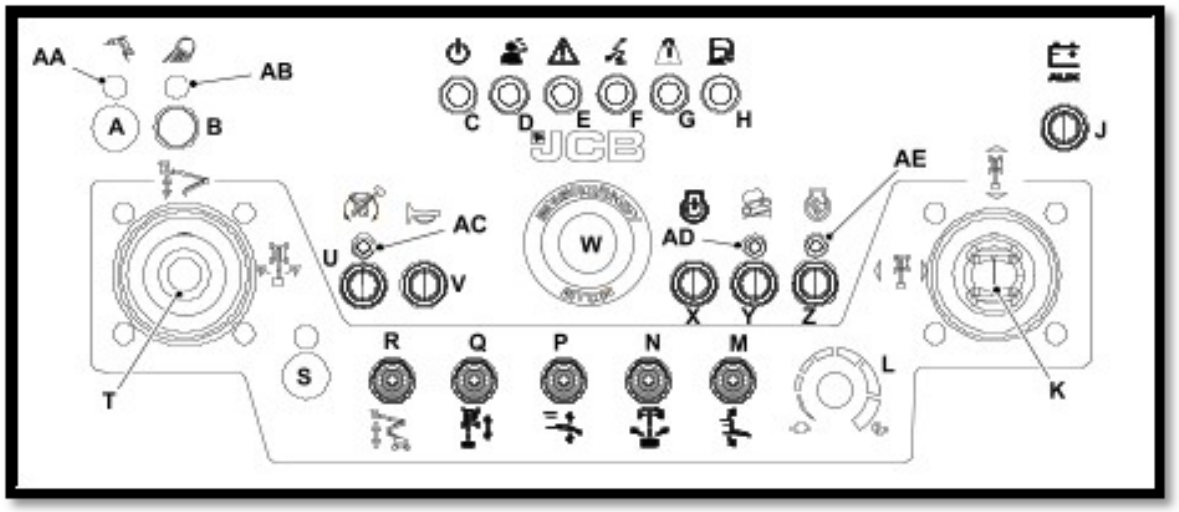

A	Hydraulic generator ON/OFF button	**R**	Articulated boom up/down function switch
B	Work lights ON/OFF button	**S**	N/A
D	Operator error/caution alarm	**T**	Main boom lift and slew joystick
J	Auxiliary power button	**U**	Slew acknowledgment button

© 2026 JCB INDIA LTD

K	Drive and steer joystick	**V**	Horn button
L	Proportional speed control	**W**	Emergency stop button
M	Manual platform level switch	**X**	Engine stop/start button
N	Platform rotate switch	**Y**	High torque button
P	Jib boom up/down switch	**Z**	Engine high/low speed select button
Q	Telescope in/out function switch		

Callout	Indicator	Description
A	Hydraulic generator ON/OFF button	Lets user set hydraulic generator ON/OFF.
B	Work lights ON/OFF button	Lets user set work lights ON/OFF
C	Power ON/OFF indicator	Indicates (Constant ON) machine ignition is ON.
D	Operator error/caution indicator	Indicates (Flashing) an operator input is disabled. Indicates (Flashing) the platform secondary guarding system is activated.
E	Error indicator	Indicates (Flashing) a critical fault has occurred. Indicates (Constant ON) a non-critical fault has occurred.
F	Tilt limit warning indicator	Indicates (Flashing) the gradient is more than the rated slope and the machine is in the raised condition. Indicates (Constant ON) the gradient is more than the rated slope and the machine is in the stowed condition.
G	Overload warning indicator	Indicates (Flashing) the platform load is above the rated load limit. Indicates (Constant ON) the platform load is approaching the rated load limit.
H	Low fuel level indicator	Indicates (Flashing) the fuel level is below 10% tank capacity. Indicates (Constant ON) the fuel level is below 25% tank capacity.
S	N/A	N/A
U	Slew acknowledgment button	It lets operator acknowledged the slew position.
Y	High torque selection button	It lets operator set the machine to high torque low speed mode.
Z	Engine high/low speed select button	It lets operator set the high or low engine speed.
AA	Hydraulic generator ON/OFF indicator	Indicates (Constant ON) generator is ON.
AB	Work-lights ON/OFF indicator	Indicates (Constant ON) work lights are ON.
AC	Slew acknowledgment indicator	Indicates (Flashing) the slew position is not in the forward condition. Indicates (Constant ON) the operator has acknowledged the slew position.
AD	High torque indicator	Indicates (Constant ON) high torque is set ON.
AE	Engine high-speed indicator	Indicates (Constant ON) engine speed is set to high.

© 2026 JCB INDIA LTD

2.5 Earth Point Locations



Machine Details 22 > Earth Point Locations

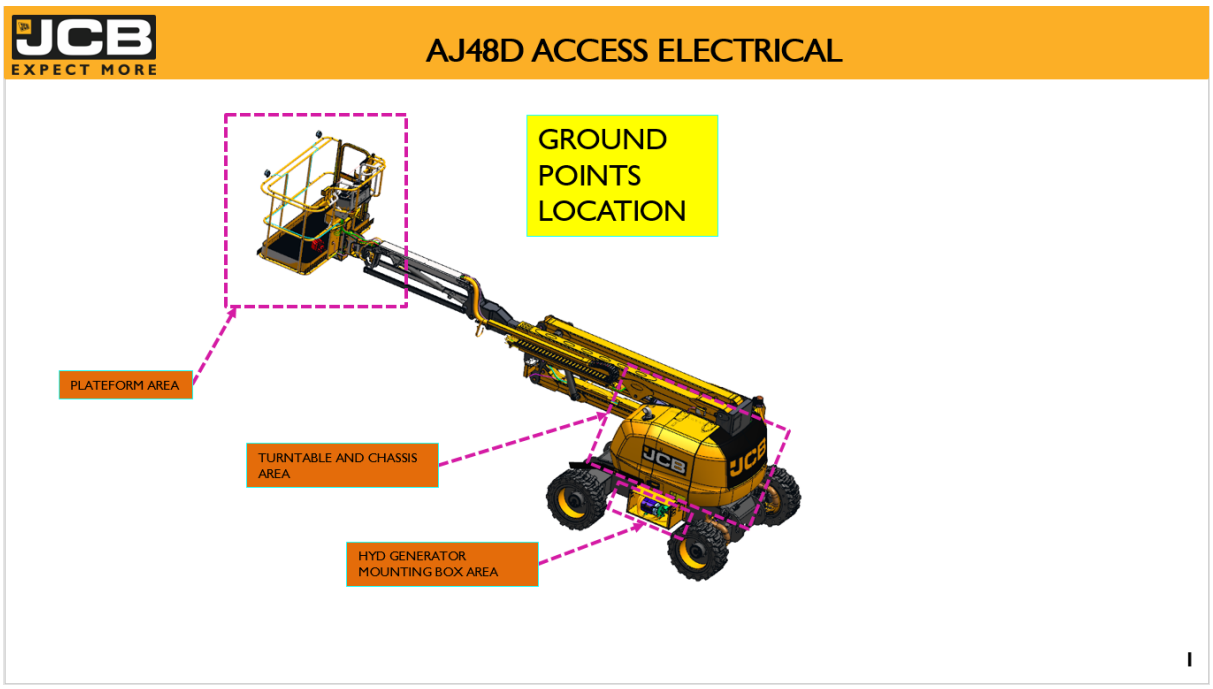

2.5.1 Earth Point Platform



© 2026 JCB INDIA LTD

Machine Details 22 > Earth Point Locations 33 > Earth Point Platform

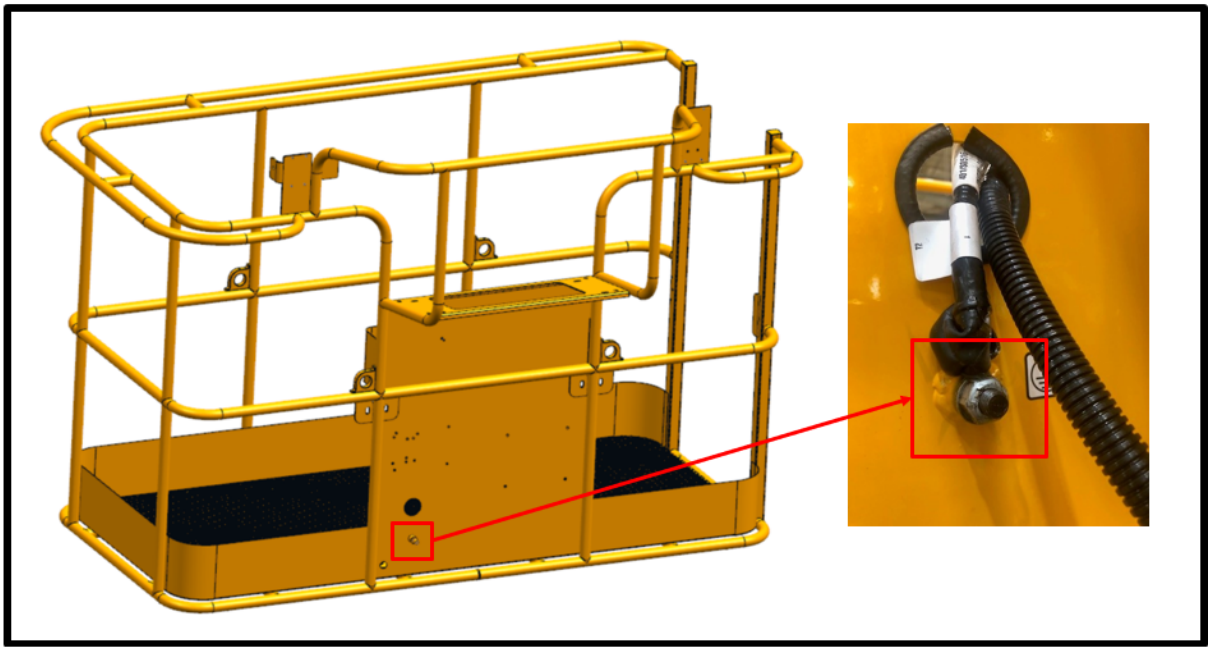

2.5.2 Earth Point Turn Table



Machine Details 22 > Earth Point Locations 33 > Earth Point Turn Table

© 2026 JCB INDIA LTD

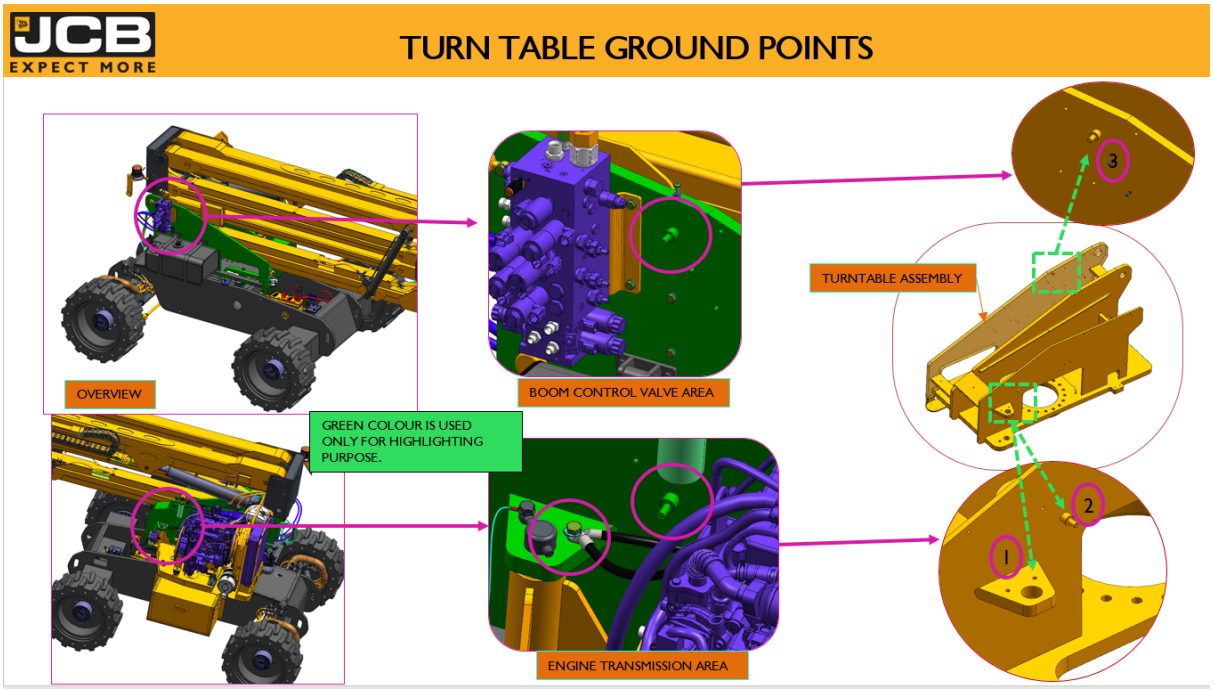

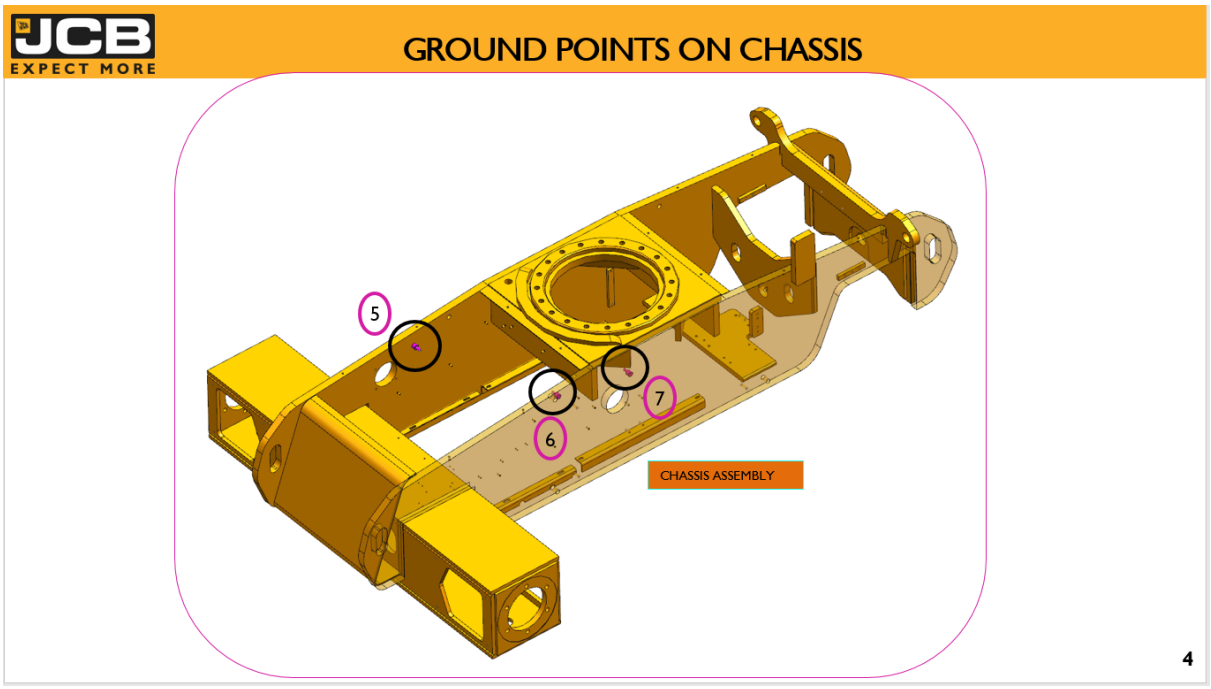

2.5.3 Earth Point Chassis

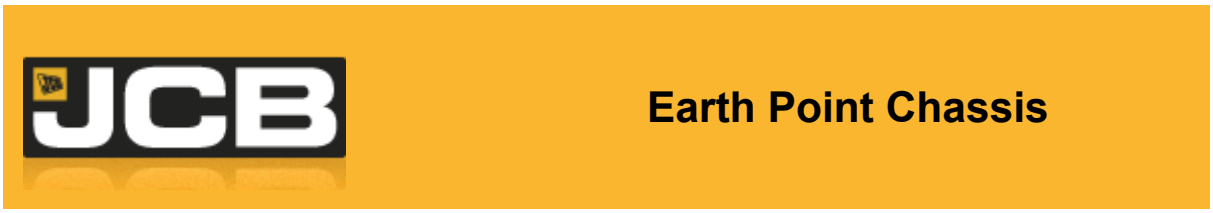

© 2026 JCB INDIA LTD

Machine Details 22 > Earth Point Locations 33 > Earth Point Chassis

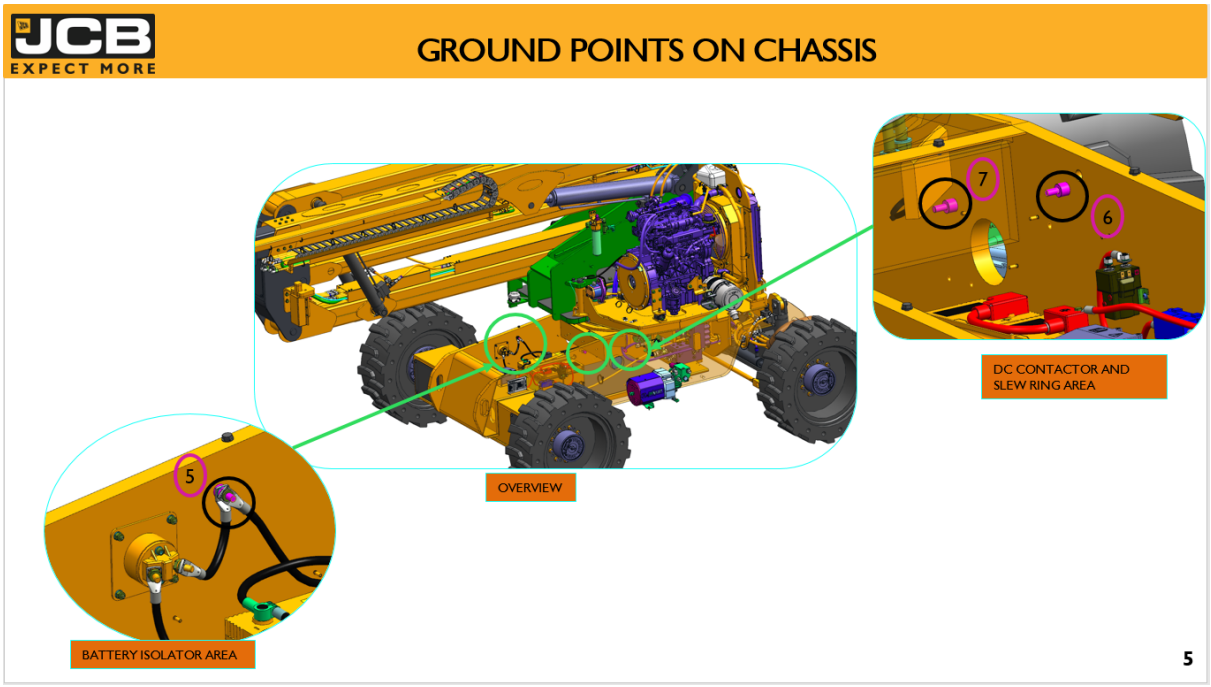

2.5.4 Earth Point Generator



Machine Details 22 > Earth Point Locations 33 > Earth Point Generator

© 2026 JCB INDIA LTD

GROUND POINTS INSIDE HYD GENERATOR BOX

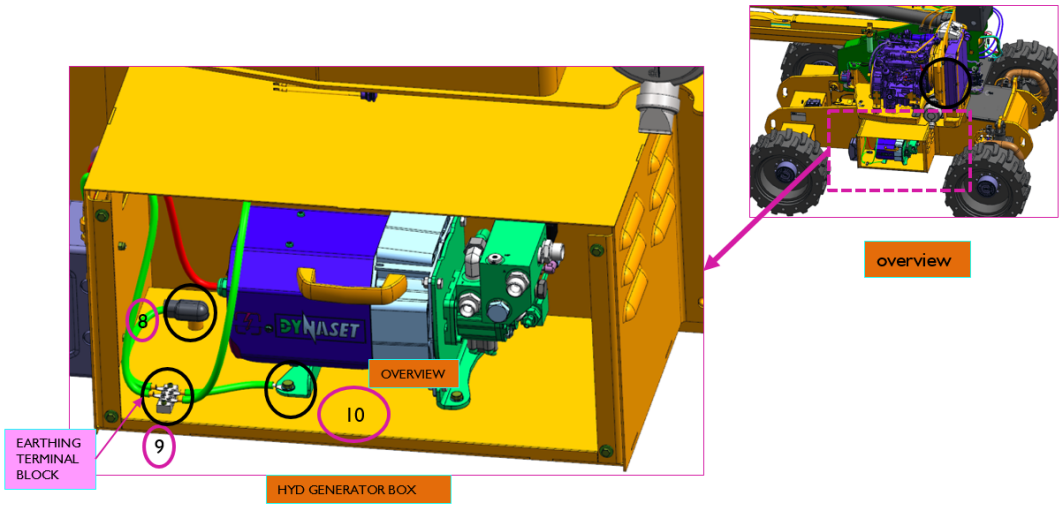

6

© 2026 JCB INDIA LTD

This page is intentionally left blank.
Remove this text from the manual
template if you want it completely blank.

System Level Function

3 System Level Function



List of System Level Function 40

Sr No.	Component
1	Ignition 41
2	Horn 43
3	Electric Pump (Aux) 45
4	Emergency Stop 49
5	Engine Start & Stop 52
6	Grid Heater 55
7	Engine Speed 58
8	Engine Alternator 60
9	Air Filter Blocked 64
10	Crush Protection System 66
11	High Torque 69
12	Steering 72
13	Slew 76
14	Limit Switch Position 80
15	Platform Rotate 80
16	Overload 84
17	Main Boom 88
18	Leveling 92
19	Jib 95
20	Tilt 98
21	Telescope Boom 100
22	Articulated Boom 104
23	Generator 107
24	Fuel Level 109
25	Oscillating Axle 112
26	Override 115
27	Drive 116
28	Display Functions 119

© 2026 JCB INDIA LTD

3.1 Ignition

Ignition

System Level Function 40 > Ignition

Function

•The ignition turns on and off the main power of the machine.

•The system diagram is assuming the isolator key is fitted and 'ON'

•The diagram below shows the main components that will turn on when the ignition is cycled 'ON'

•When the key is turned on there should be 3 beeps from the base and platform buzzers

Signal

•The main power is fed from the battery into the lower control box through an 80A primary fuse and into the large din rail terminal S11-21.

•The din rail terminals are connected together with large jumper bars to S11-24, which then fed FU16_TCP (7.5A) Fuse.

•FU16_TCP then feds power to the ignition key. This signal is a permanent fed as long as there is power in the batteries and no fuse is blown.

•From the ignition key feds S11-9 din rail terminal that feeds out to the 4 ignition relays.

System diagram

Below shows an overview on what the operator should see when the ignition key is set to the 'ON' position.

© 2026 JCB INDIA LTD

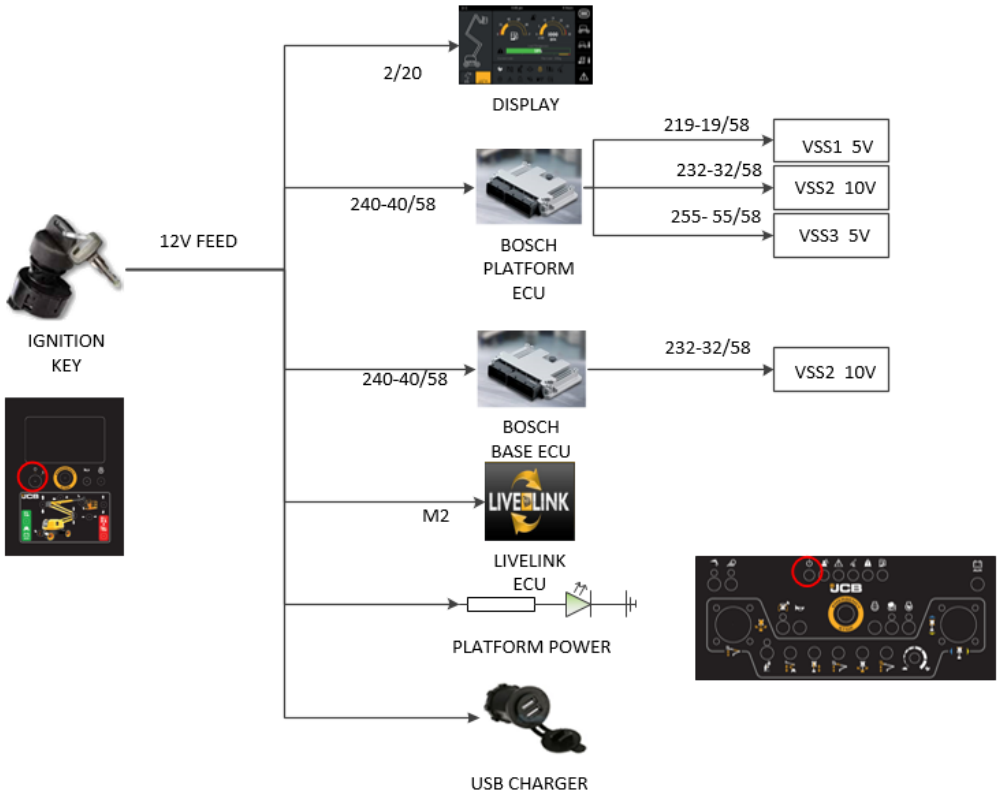

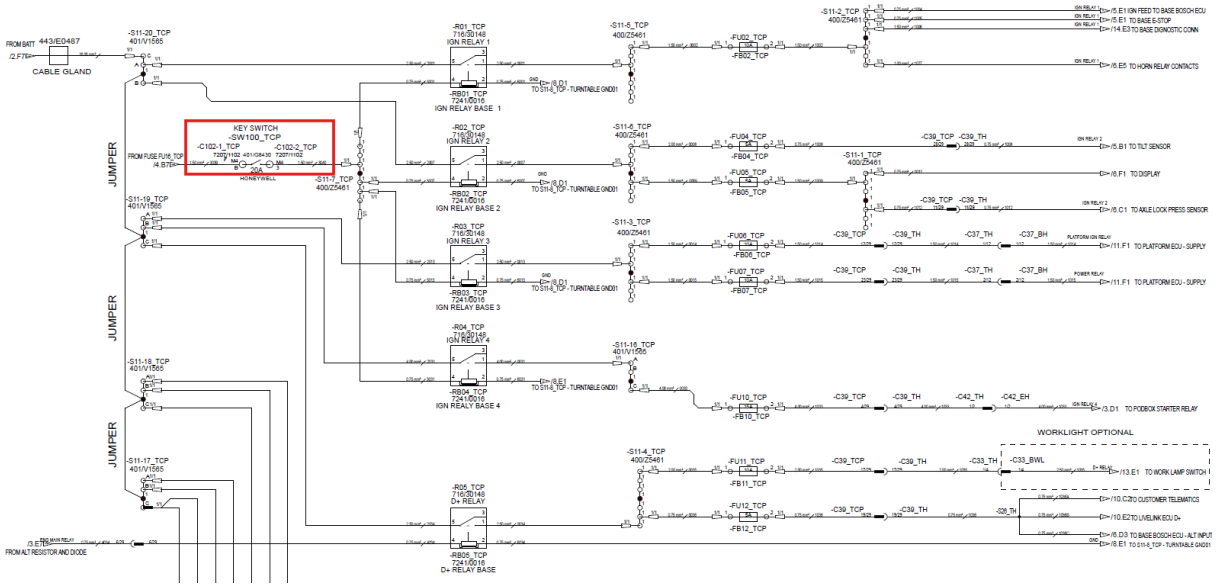

Parts in Circuit

- Ignition Switch 460
- Base Bosch ECU 292
- Platform ECU 325

© 2026 JCB INDIA LTD

- Large Jumper Bar 422
- Large Din Rail Terminal 476
- PF02 - Control System Primary 139

Related Fault Codes

Fault Code	Description
B1353-16 900	Engine ignition - Circuit short to low
B1354-13 901	Engine ignition - Circuit open or short to high (12v)

3.2 Horn



System Level Function 40 > Horn

Function

• The horn can be pressed from the Base or Platform control station. There is only one horn output which is below the base control box.

• The horn must be working correctly for safe machine operation.

• The horn can be operated from the platform and base control panel. The horn is located under the turntable. An improperly functioning horn may prevent the operator from alerting the ground personnel of hazards or unsafe conditions.

© 2026 JCB INDIA LTD

- Use the horn wherever necessary, particularly at blind corners.

System Diagram

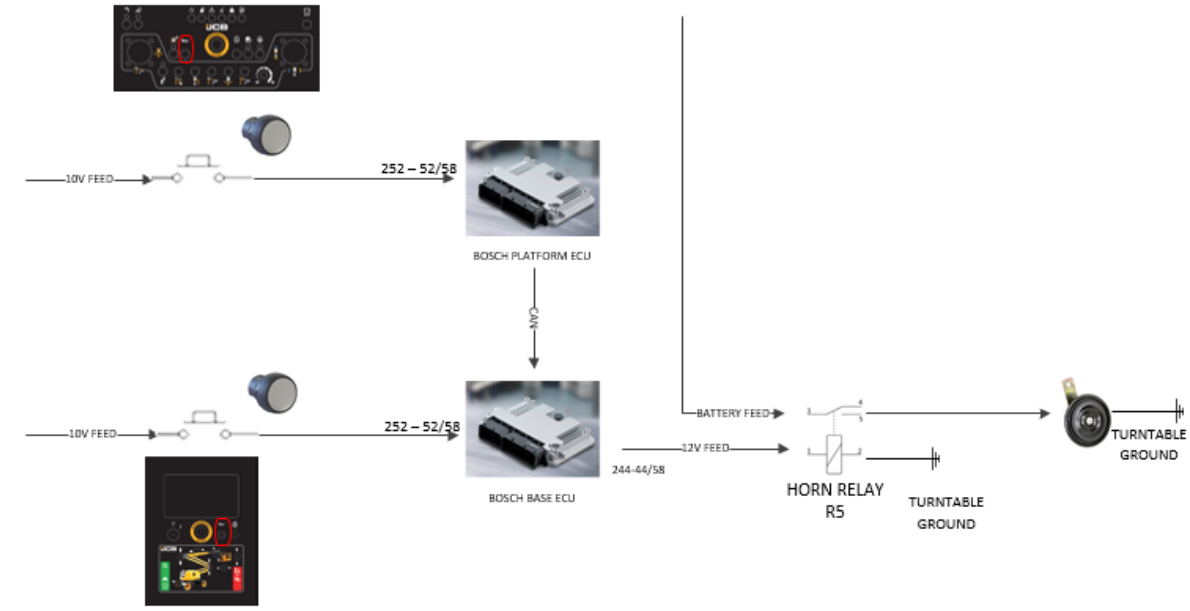

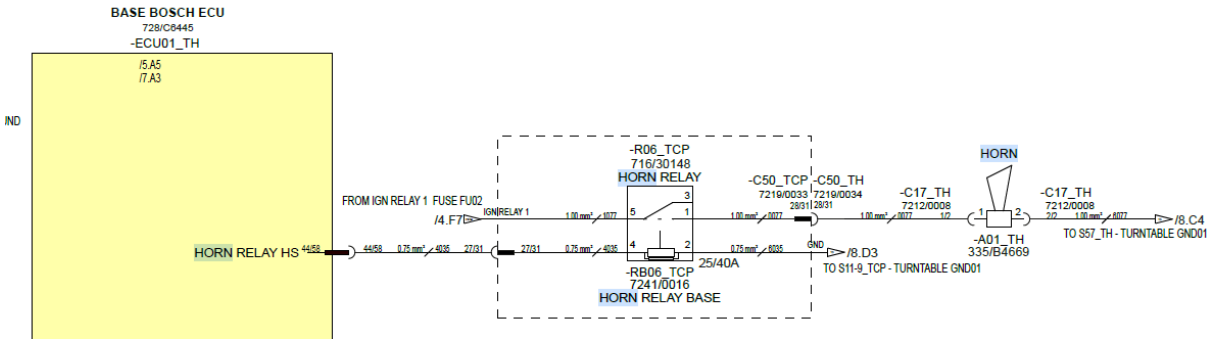

Parts in system

- Base Bosch ECU 292
- Platform ECU 325
- Horn Switch(TCP) 472
- Horn Switch(PCP) 378
- Horn Relay 440
- Horn 218

© 2026 JCB INDIA LTD

Related Fault Codes

Fault Code	Fault Description
B1181-16 729	Horn relay - Circuit short to low
B1182-13 730	Horn relay - Circuit open
B1206-17 755	Horn turntable button - Circuit short to high (10v)
B1207-16 757	Horn turntable button - Circuit short to low
B1208-24 758	Horn turntable button - Signal stuck high
B1273-17 828	Horn platform button - Circuit short to high (10v)
B1274-16 829	Horn platform button - Circuit short to low
B1275-24 830	Horn platform button - Signal stuck high

3.3 Electric Pump



System Level Function 40 > Electric Pump

Function

- The electric pump is there for recovering an operator or very low usage of the booms. Using the recovery system will be explained in override procedure

© 2026 JCB INDIA LTD

- The isolator and ignition key must both be in the 'ON' position.It is advised that only one function at a time should be used.

To use the electric pump from the base control station.

- The engine should not be running,
- Press and hold base enable switch
- Operate function button while keeping the base enable pressed
- Only one function may be operated at a time
- To use the electric pump from the platform
- Platform enable button on base control station (default position)
- Press the foot pedal and hold
- Press the AUX button and hold
- Press required function

The following functions will not work with the electric pump:

- Drive
- Steer
- Hydraulic Generator

System Diagram

© 2026 JCB INDIA LTD

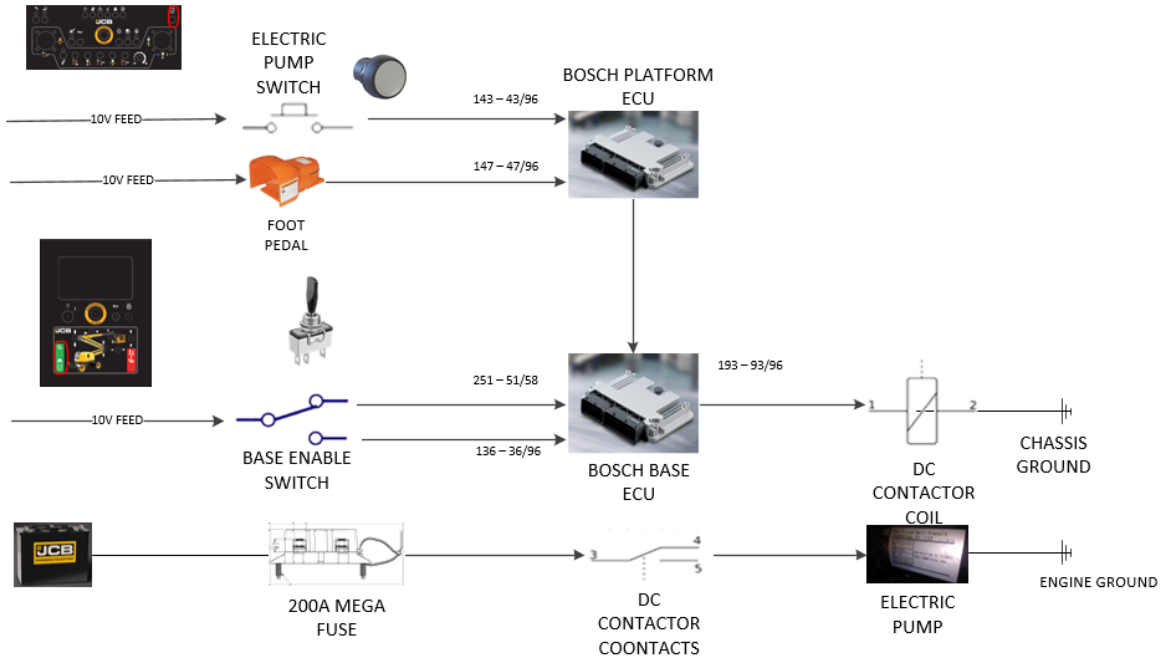

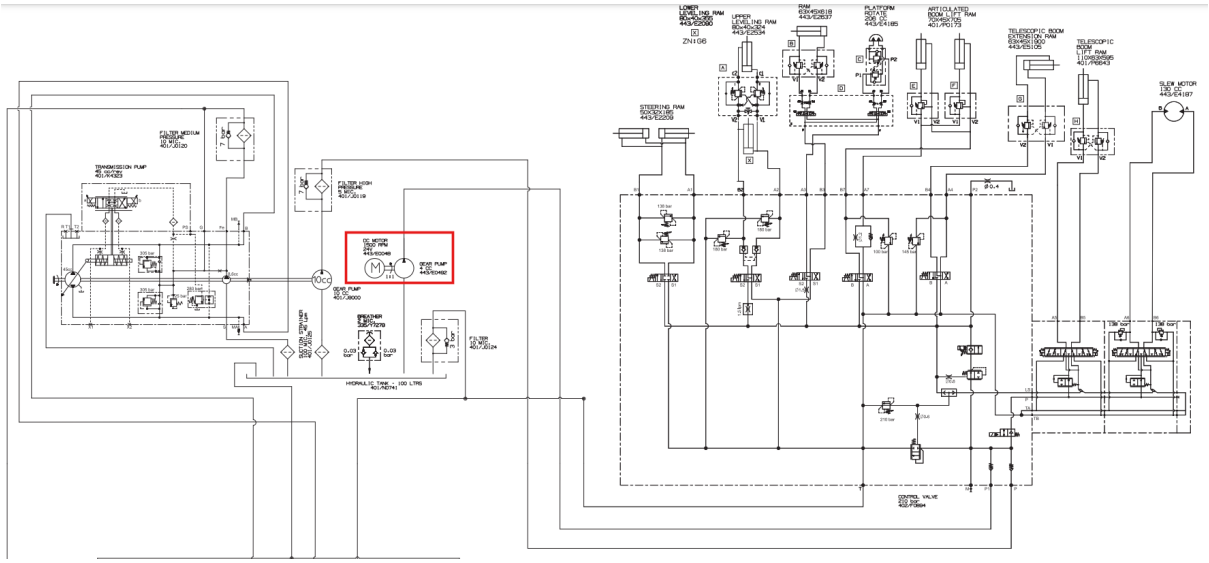

Parts in system

- Electric Pump 268
- Base ECU 292
- Platform ECU 325

© 2026 JCB INDIA LTD

- Foot Switch 313
- DC Contactor 238

Related Fault Codes

Fault Code	Fault Description
B1055-17 602	AUX / Overload override button pressed condition - Circuit short to high (10v)
B1056-16 603	AUX / Overload override button pressed condition - Circuit short to low
B1694-17 911	AUX / Overload override button unpressed condition - Circuit short to high (10v)
B1695-16 912	AUX / Overload override button unpressed condition - Circuit short to low
B1696-13 913	AUX / Overload override button both conditions - Signal plausibility failure (Circuit open)
B1697-92 914	AUX / Overload override button both conditions - Signal plausibility failure (10v)

© 2026 JCB INDIA LTD

3.4 Emergency Stop

Emergency Stop

System Level Function 40 > Emergency Stop

Function

The emergency stop is the for the operator to stop all machine movement immediately.

This will not turn power on the machine off and only disable outputs from the machine controllers.

System Diagram

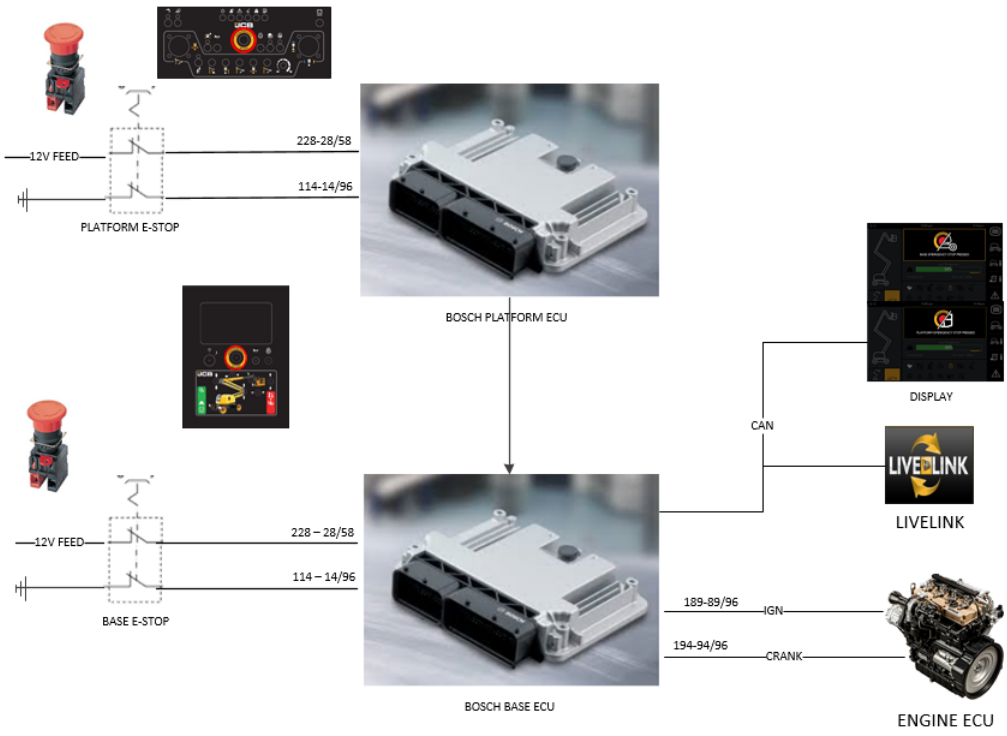

© 2026 JCB INDIA LTD

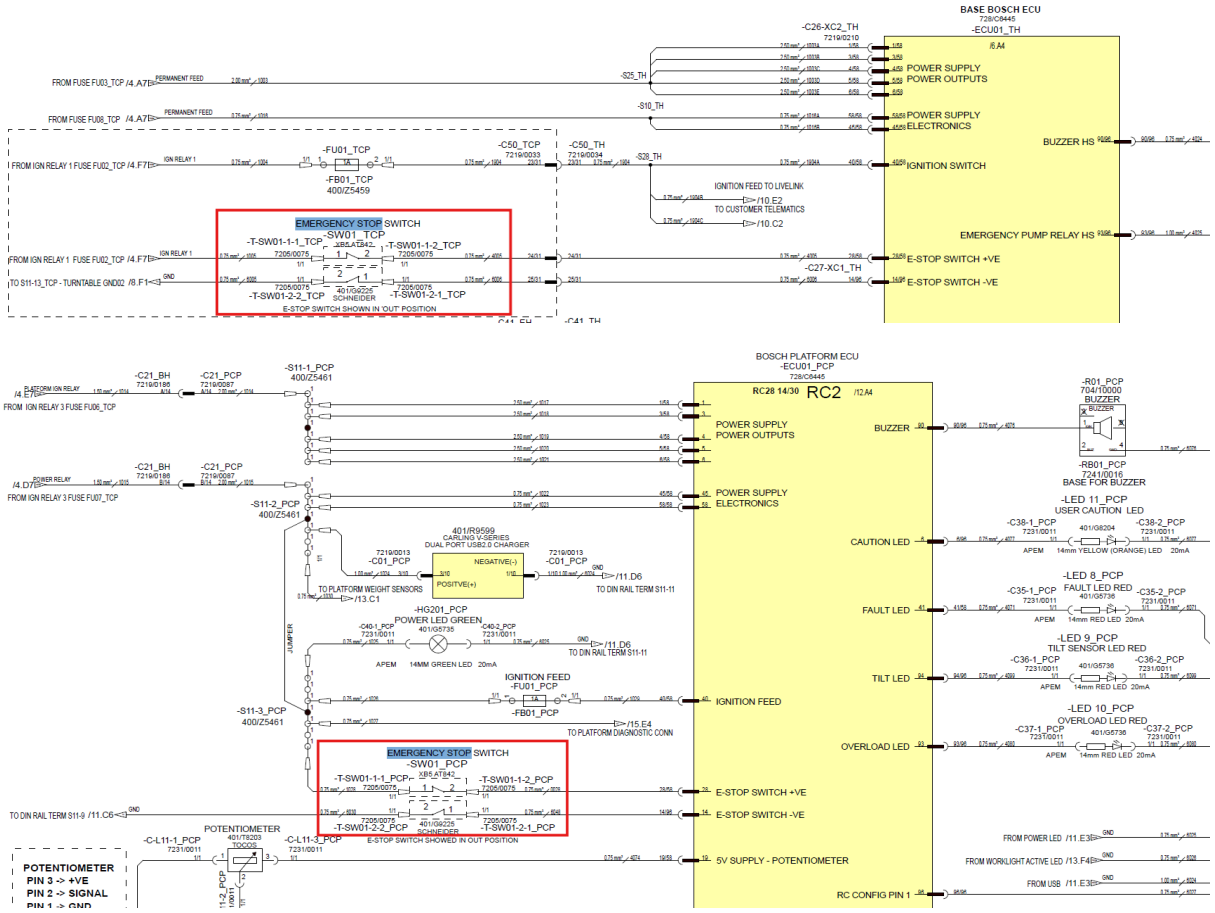

Signal

- There are 2 signals used by the control system.
- A 12V signal and a Ground signal.
- For the control system to operate both signals need to be on at the same time, if either is incorrect the control system will be blocked.

Parts in Circuit

- E-Stop Base 464
- E-Stop Platform 381
- Platform ECU 325
- Base ECU 292

© 2026 JCB INDIA LTD

- Ignition Relays 436
- Ignition Switch 460

Related Fault Codes

Fault Code	Fault Description
B1001-17 544	E-stop turntable button - Signal plausibility failure
B1235-17 785	E-stop platform button - Signal plausibility failure

© 2026 JCB INDIA LTD

3.5 Engine Start & Stop



System Level Function 40 > Engine Start & Stop

Function

- This function is to start and stop the engine.
- The isolator and ignition should be in the 'ON' position
- There should be no enable pressed by the operator, this is base enable or the foot pedal at the platform.
- The E-stop should be un-pressed
- The should be no other buttons pressed at same time as engine start.
- The engine may be started or stopped from either control station
- The engine Ignition is controlled via Bosch base ecu.

Signal

- From either control station the engine start button is fed from the 10V feed from the respective ECU.
- When the push button is pressed a 10V signal is sent to the ecu. (this is a momentary signal while pressed)
- The platform ecu sends this to base ecu and the base ecu makes a decision if it is safe to start the engine.
- The Bosch ecu will send out an RPM value over CAN 1 to the engine and also a hardwired crank signal via pin 94/96
- When the engine is ready to start this will ground pin B6 in the engine harness which will allow the starter relay (in pod box) to engage allow power to travel to the starter motor via pin G2 of the engine harness

Logical Overview

© 2026 JCB INDIA LTD

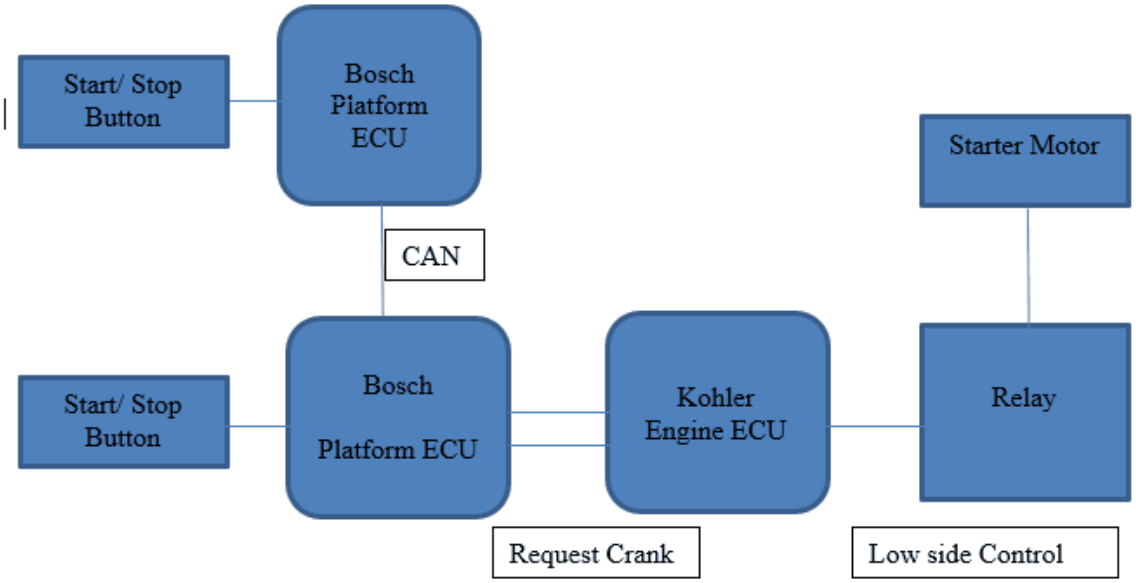

System Diagram

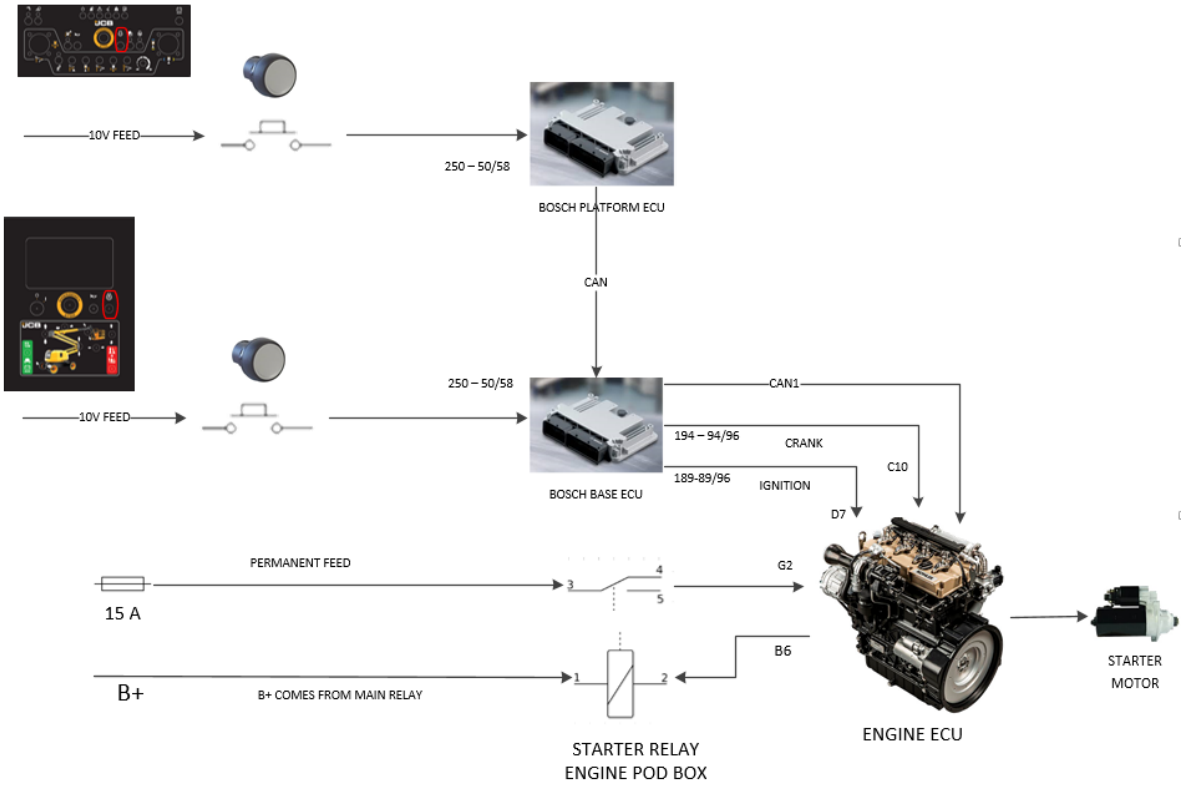

© 2026 JCB INDIA LTD

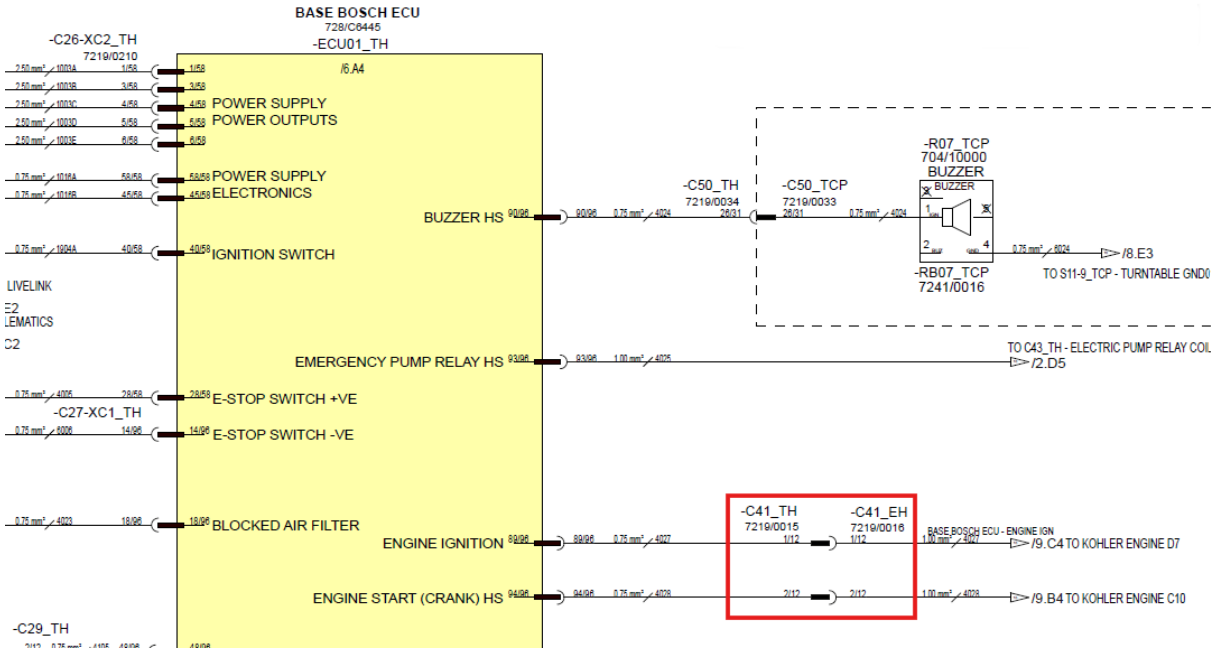

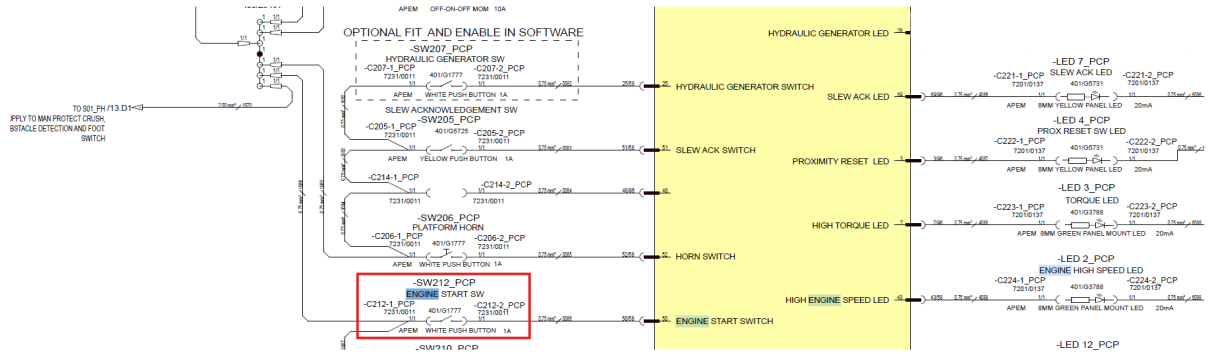

Parts in Circuit

- E-Stop Base 464
- E-Stop Platform 381
- Platform ECU 325
- Base ECU 292
- Kohler Engine ECU 215

© 2026 JCB INDIA LTD

- Ignition Relays 436
- Ignition Switch 460

Related Fault Codes

Fault Code	Fault Description
B1050-17 596	Engine start / stop turntable button - Circuit short to high (10v)
B1051-16 597	Engine start / stop turntable button - Circuit short to low
B1052-24 598	Engine start / stop turntable button - Signal stuck high
B1239-17 790	Engine start / stop platform button - Circuit short to high (10v)
B1240-16 791	Engine start / stop platform button - Circuit short to low
B1241-24 792	Engine start / stop platform button - signal stuck high
B1353-16 900	Engine ignition - Circuit short to low
B1354-13 901	Engine ignition - Circuit open or short to high (12v)

3.6 Grid Heater



System Level Function 40 > Grid Heater

Function

•The grid heater is to warm the engine in cold conditions.

•This is optional fit and not be fitted to all machines.

© 2026 JCB INDIA LTD

•The kohler engine controls this and will turn it on as required.

•When the grid heater is required the kohler engine will ground the F12 pin to allow the relay to be pulled in and allow power to the grid heater unit.

•The grid heater is also grounded to the engine body.

System Diagram

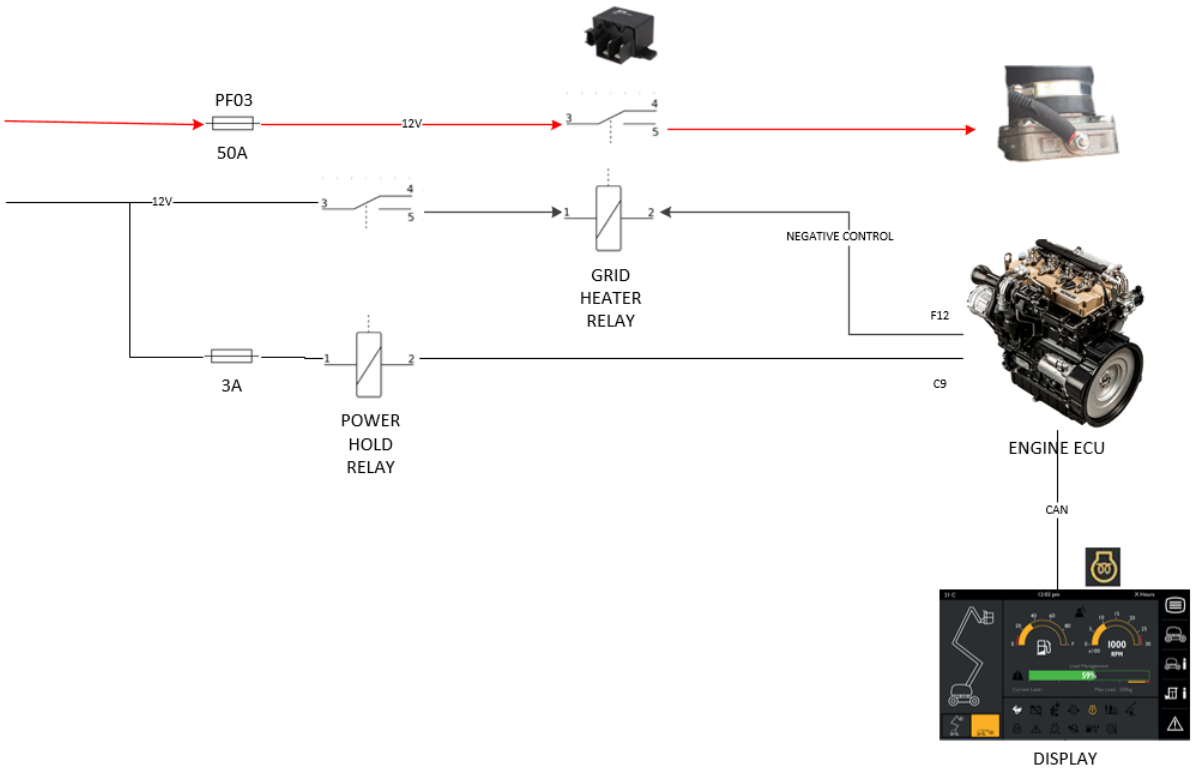

© 2026 JCB INDIA LTD

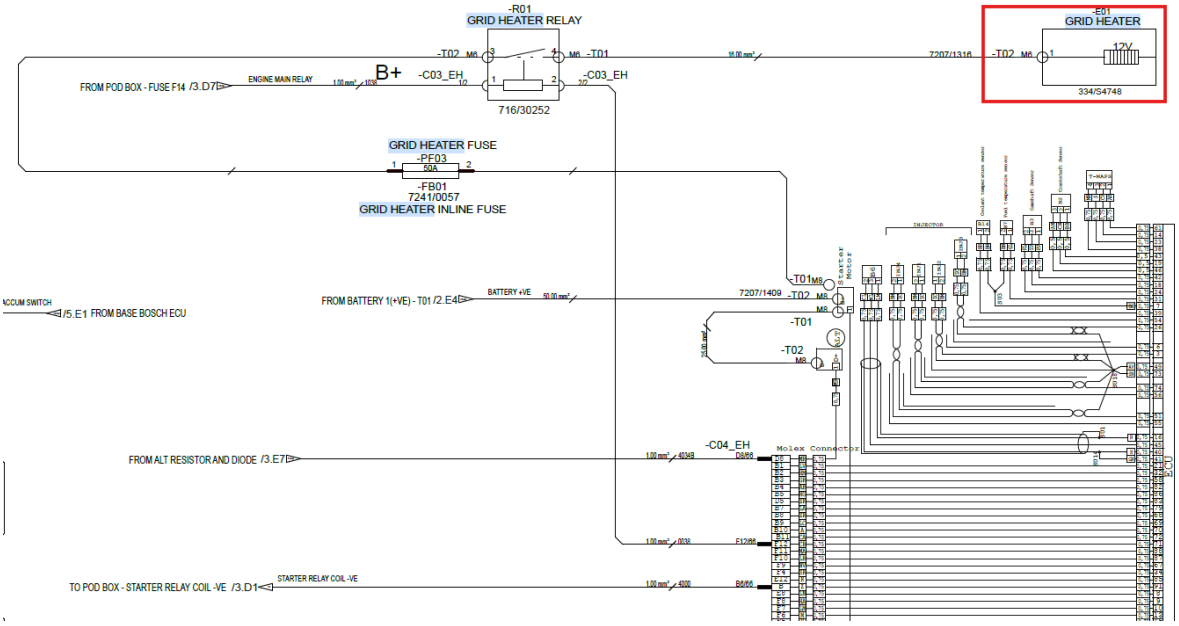

Parts in Circuit

- Display Base 518
- E-Stop Platform 381
- Platform ECU 325
- Base ECU 292
- Kohler Engine ECU 215
- Engine POD Box 189
- PF03 Grid Heater Fuse 142
- Grid Heater Relay 163
- Grid Heater 160

Related Fault Codes

Please Refer Kohler Helpfile.

© 2026 JCB INDIA LTD

3.7 Engine Speed



System Level Function 40 > Engine Speed

Function

•The engine speed selection push button is only available at the platform control station.This is used to increase or decreased the engine RPM.

•At idle the machine will be set around 1000RPM .At low speed it will be 1500 RPM. At high speed it will be set to 2000RPM

•The isolator and ignition key should be in the 'ON' position. The engine should be started

•The foot pedal needs to be pressed while the engine speed button is pressed to make change in speeds.

•The LED will be active when the high speed is selected.

System Diagram

Below shows a machine overview for the engine speed selection

© 2026 JCB INDIA LTD

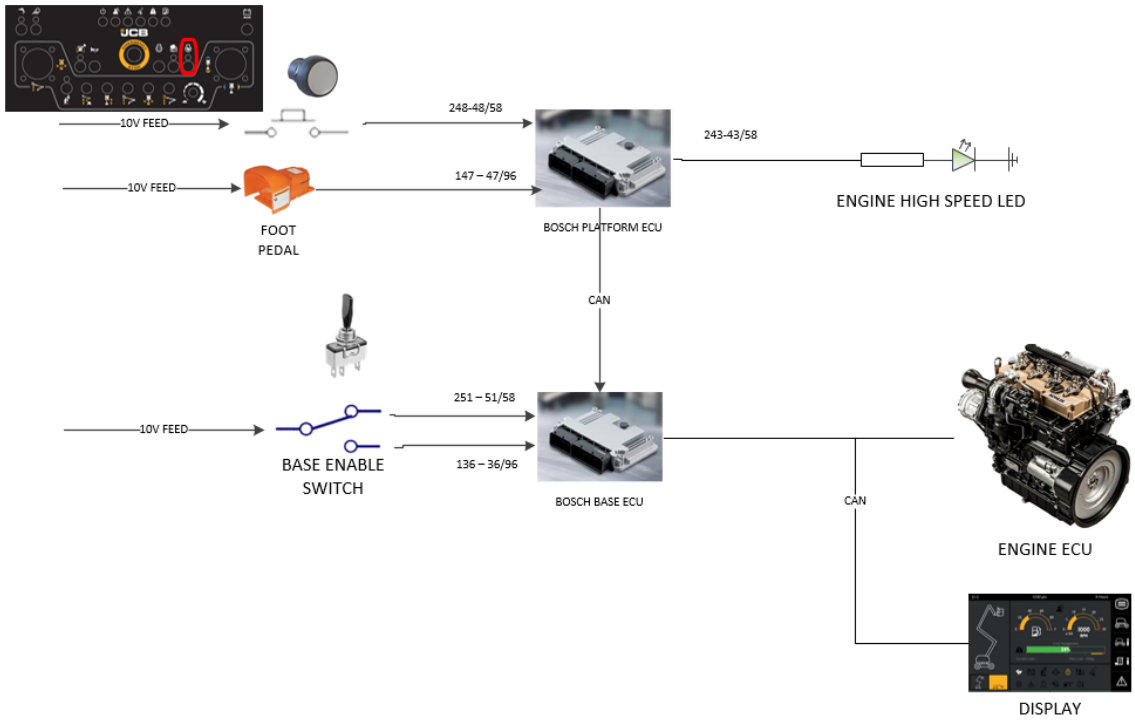

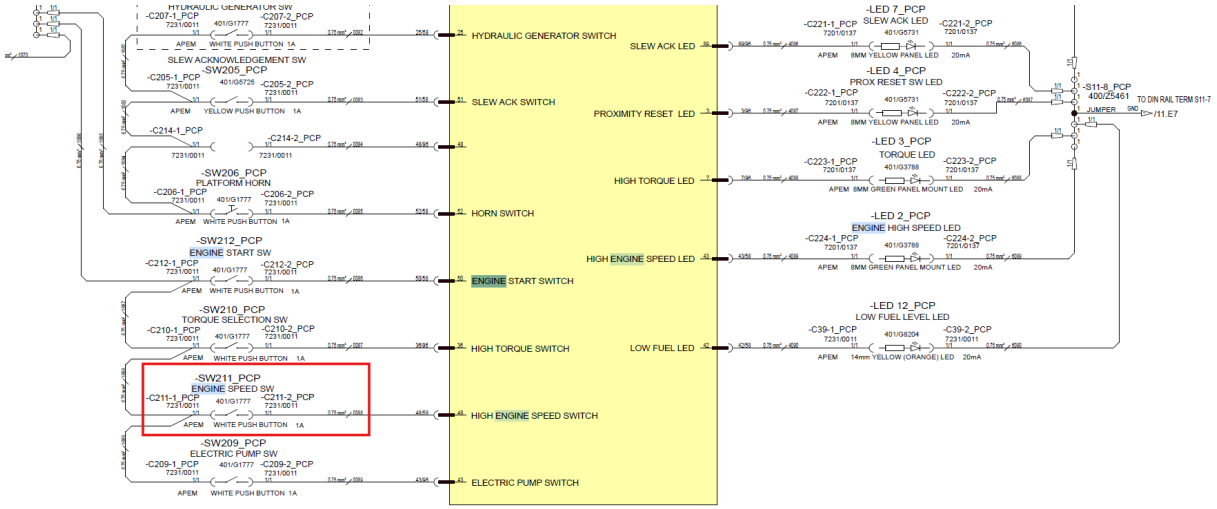

Signal

- Input Switches are 10V
- The engine speed is control via CAN message to the throttle controller from the base control unit.

© 2026 JCB INDIA LTD

Parts in Circuit

- High Engine Speed Button - Platform 389
- Platform ECU 325
- Base ECU 292
- Kohler Engine ECU 215
- Base Enable switch 485
- Foot Pedal - Platform 313

Related Fault Codes

Fault Code	Fault Description
B1209-17 759	High engine speed platform button - Circuit short to high (10v)
B1210-16 760	High engine speed platform button - Circuit short to low
B1211-24 761	High engine speed platform button - Signal stuck high

3.8 Engine Alternator



© 2026 JCB INDIA LTD

System Level Function 40 > Engine Alternator

Function

•The engine alternator is used to charge the machine batteries up while the engine is running.

Signal

•From the pod box (FU11) a 12V signal goes to the alternator resistor and through a diode and feeds down to the alternator

•When the alternator is not turning this signal will go to ground and pull the current as least path of resistance.

•As the alternator spins up to speed by the engine the ground signal will turn to a voltage output, at this point the D+ relay will receive enough voltage to pull the relay in and allowing a signal to the Bosch ecu, Livelink and also allow the work lights to operate.

•If the engine is not running and this signal does not get through to Bosch ecu the alternator no charger will come on dash with no buzzer

•If the engine is running and this signal is not received then the ecu will flag an error as alternator is not charging and put a error code out as well as put the buzzer and warning light on the display and fault led at the platform.

System Diagram

© 2026 JCB INDIA LTD

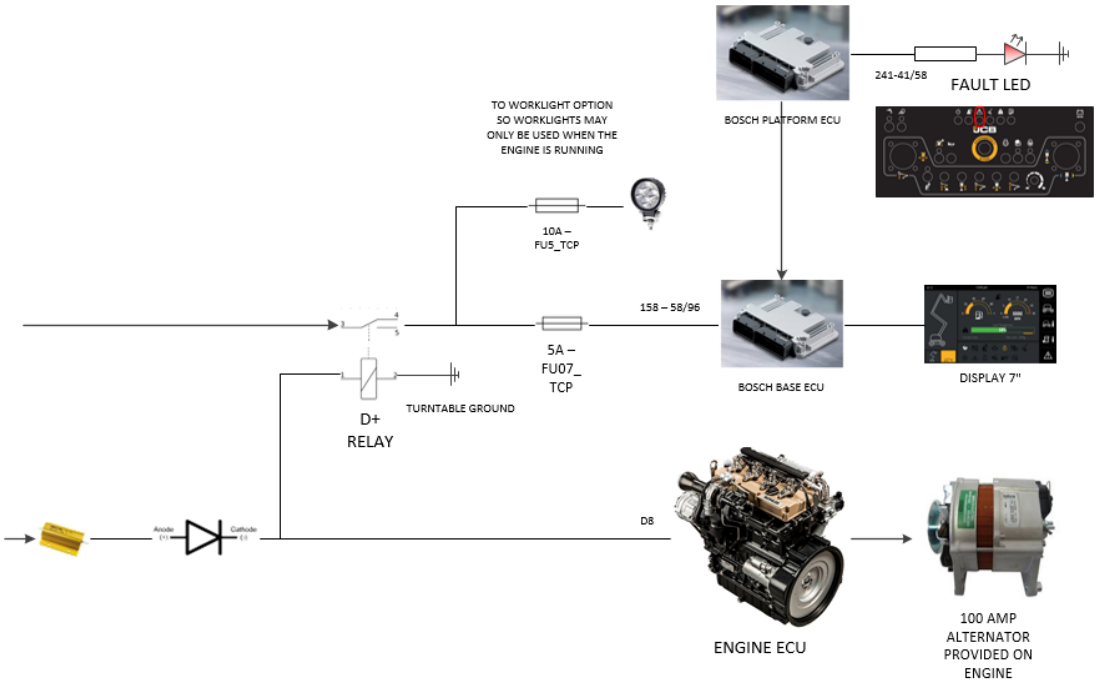

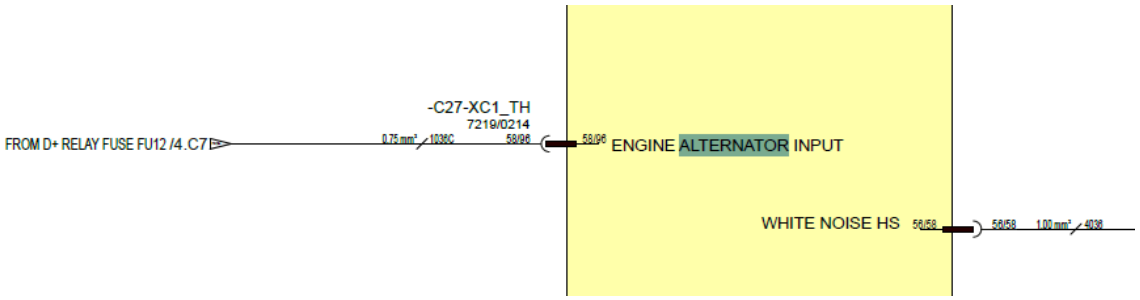

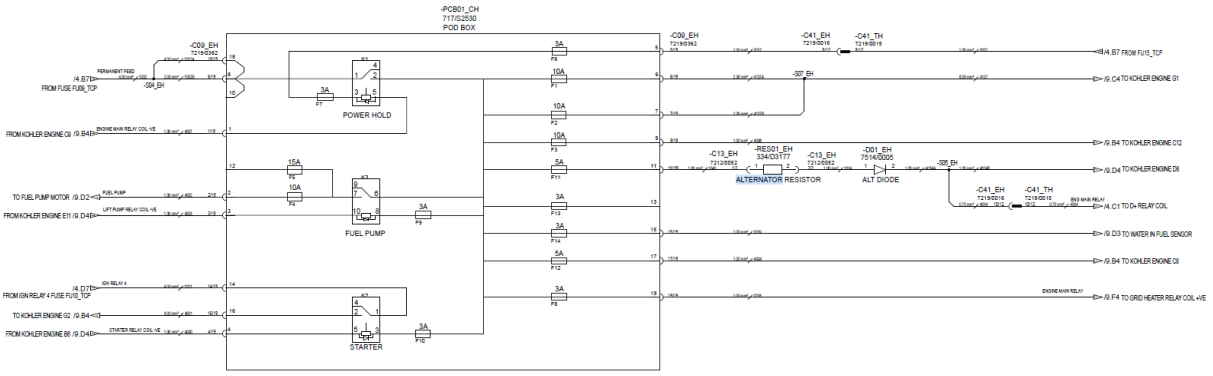

Parts in Circuit

- D+ Relay 443

© 2026 JCB INDIA LTD

- Alternator and Resistor 185
- Platform ECU 325
- Base ECU 292
- Kohler Engine ECU 215
- Base Enable switch 485
- Fault LED 408

Related Fault Codes

Fault Code	Fault Description
B1300-2F 846	ALTERNATOR FAULT
B1681-13 908	Unexpected Alternator input fault Short to low (When engine is started / Engine running)

© 2026 JCB INDIA LTD

3.9 Air Filter Blocked

Air Filter Blocked

System Level Function 40 > Air Filter Blocked

Function

The air filter blocked circuit is to ensure that the engine does not get run with a blocked filter causing damage to the engine.

Blocked air filter.	

System Diagram

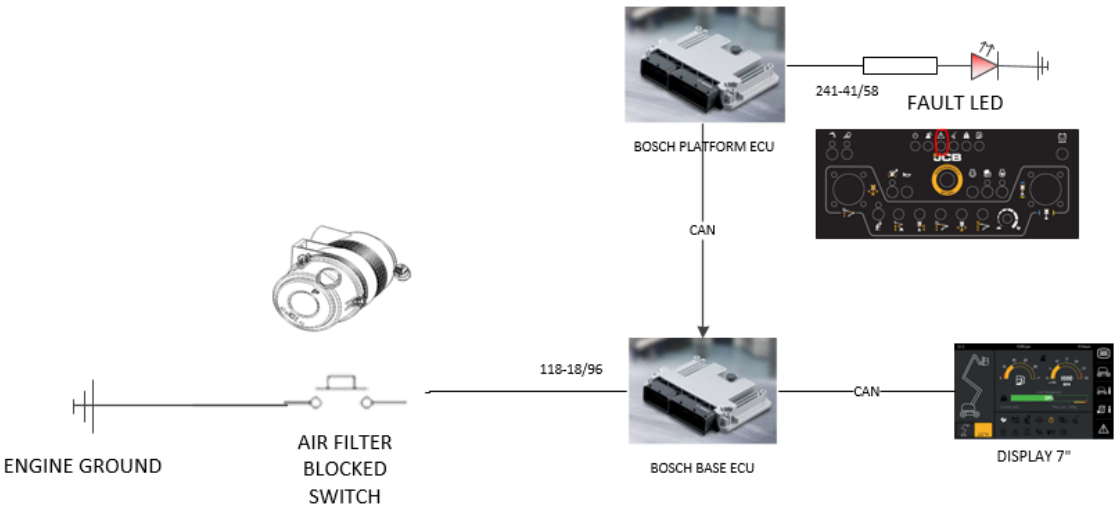

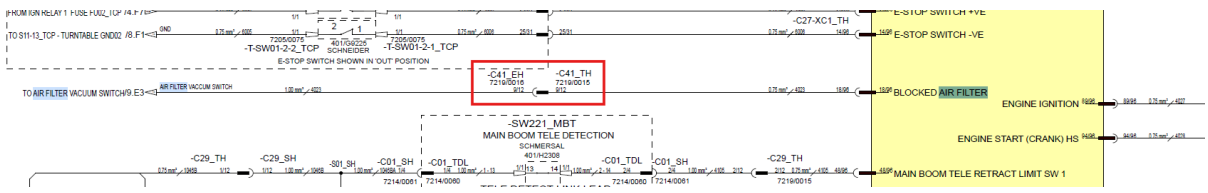

© 2026 JCB INDIA LTD

Parts in Circuit

- Air Filter Switch 157
- Platform ECU 325
- Base ECU 292
- Base Enable switch 485
- Fault LED 408

Related Fault Codes

Please Refer Kohler Helpfile.

© 2026 JCB INDIA LTD

3.10 Crush Protection System



System Level Function 40 > Crush Protection System

Function

•The crush protection system is to avoid an operator from being pressed into the platform control panel.

•The crush protection system is x2 NC switches.

•The system can only be engaged if the wire rope is fitted and torqued up correctly. Have no torque in rope is the same effect as the switch being pressed

•The system may need adjusting at times via the quick tension pulley.

•when the system is engaged correctly (not pressed):

•The full system should operate as normal

•When the system is disengaged (pressed)

•The system will stop all raise and extend controls

•The engine will return to idle

•The buzzer from both control stations will sound

•The xxx light at the platform will become active

•The crush protection icon will become active on the display

•Once the system has been pressed it will need to be reset via the pull level on the front of the switch.

System Diagram

© 2026 JCB INDIA LTD

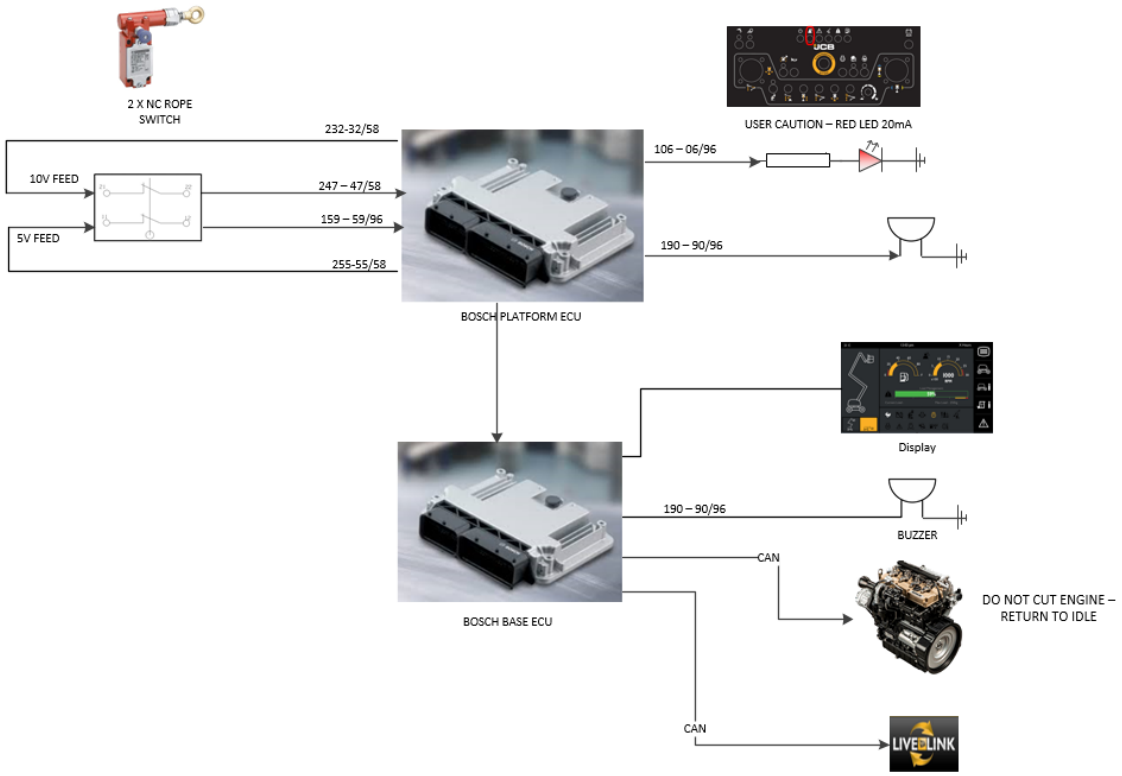

- The crush protection system is x2 NC switches.
- The system can only be engaged if the wire rope is fitted and torqued up correctly. Have no torque in rope is the same effect as the switch being pressed
- The system may need adjusting at times via the quick tension pulley.
- when the system is engaged correctly (not pressed):
- The full system should operate as normal
- When the system is disengaged (pressed)
- The system will stop all raise and extend controls
- The engine will return to idle
- The buzzer from both control stations will sound
- The xxx light at the platform will become active
- The crush protection icon will become active on the display
- Once the system has been pressed it will need to be reset via the pull level on the front of the switch.

© 2026 JCB INDIA LTD

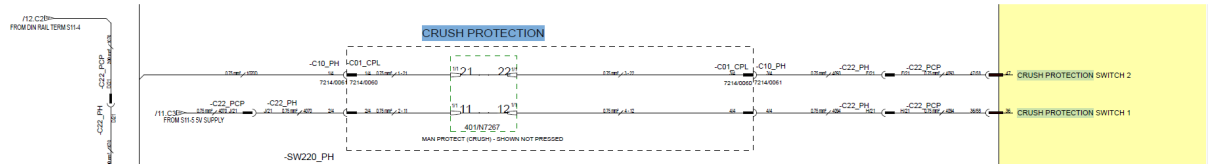

Location

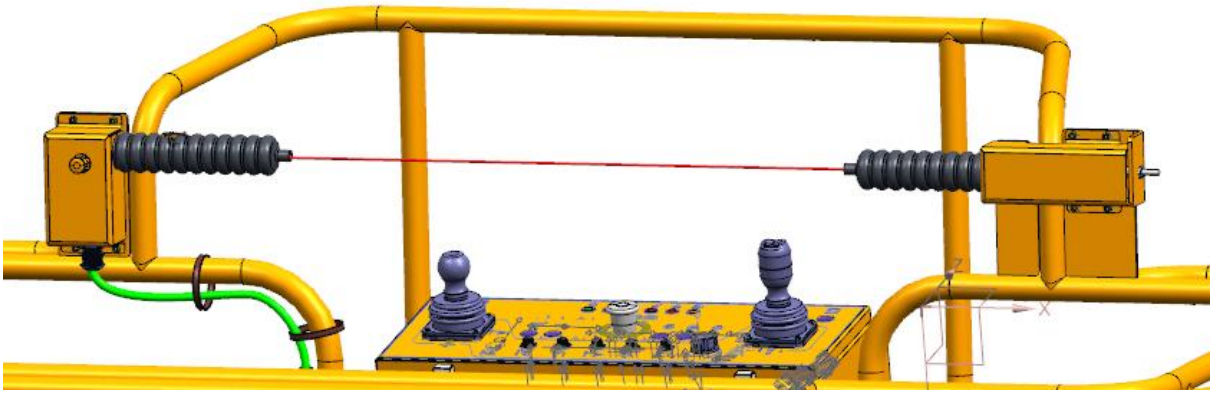

Wires and Connectors

Pin Number	Description	Wire Harness Number
11	5V Feed In	4085
12	Signal	4094
21	10V Feed In	1075TT
22	Signal	4093

Testing

Turn on the machine ignition

1.Press on the rope

2.Crush protection Icon should be shown on the display with buzzer

3.User Caution LED at the platform will light up with buzzer.

4.Pull the blue knob out on the switch to reset, Alarms/ icons should go off.

Parts in Circuit

© 2026 JCB INDIA LTD

- Crush Protection Switch 317
- Platform ECU 325
- Base ECU 292

Related Fault Codes

Fault Code	Description
B1025-13 569	Crush protection position switch - Signal plausibility failure
B1026-17 570	Crush protection position switch 1 - Circuit short to high (5v)
B1027-16 571	Crush protection position switch 1 - Circuit short to low
B1028-16 572	Crush protection position switch 2 - Circuit short to low
B1029-17 573	Crush protection position switch 2 - Circuit short to high (10v)

3.11 High Torque



System Level Function 40 > High Torque

Function

- The high torque function is to allow easier gradiability on steep banks without causing the engine to stall.

© 2026 JCB INDIA LTD

- High torque can only be selected from the platform control station
- The high torque function is only available in the stowed position
- The foot pedal must be pressed for the function to operate
- The high torque solenoid shall be connected to Base ECU output
- State of High torque shall be retained when transiting from stowed to raised and back to stowed
- If high torque is selected, it will remain in the mode after an ignition cycle.
- There shall be a high torque icon on Platform Display to indicate the operator about high drive torque

System Diagram

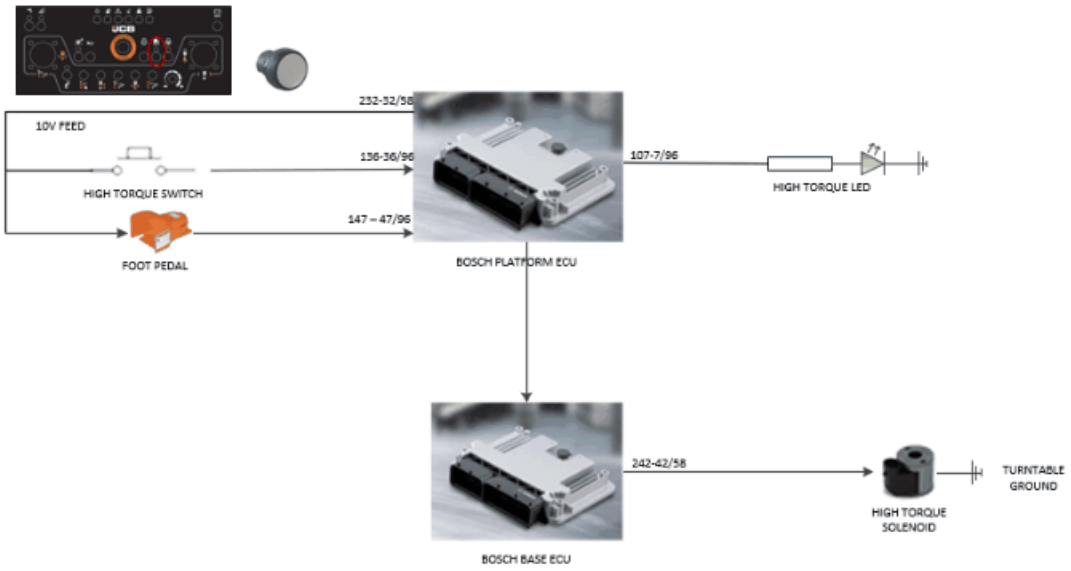

Signal

- The High Torque input is 36/96 of the platform controller.
- This switch is 10V input when the switch is pressed
- The base ECU output for high torque solenoid is 42/58
- The base ECU will apply 12V output when the high torque is switched OFF

© 2026 JCB INDIA LTD

- The base ECU will apply 0V output when the high torque is ON

Parts in Circuit

- High Torque Switch - platform 386
- Platform ECU 325
- Base ECU 292
- Main Control Valve 249
- Brake Control Valve 262
- Torque Control Valve 262

Related Fault Codes

Fault Code	Fault Description
B1046-17 591	High torque solenoid - Circuit open or short to high (12v)
B1047-16 592	High torque solenoid - Circuit open or short to low
B1212-17 762	High torque platform button - Circuit short to high (10v)
B1213-16 764	High torque platform button - Circuit short to low
B1214-24 765	High torque platform button - Signal stuck high

© 2026 JCB INDIA LTD

3.12 Steering



System Level Function 40 > Steering

Function

- The Steer function allows the machine to change direction of the front axle wheels in the left and right direction
- The speed of the steer is fixed. Steering is only available from the platform control station.
- Steering is controlled via the buttons on the top of the joystick, this is fed into the Platform Controller and sent to the base controller via CAN.
- The base controller controls the steer solenoids on the main valve block and also controls the brakes as discussed below.
- The foot pedal must be pressed for the steering function to operate
- Steer is not available via the AUX pump
- If steer is activated without drive the front brakes will be released.
- When drive is operated both front and rear brakes will be released.
- During steer the White Noise Alarm and the Beacon(s) will be active

1) Steer Left/Right

1) Steer shall be operated from the Platform control panel in both left and right directions.

© 2026 JCB INDIA LTD

2) There shall be NO Steer controls from the base control station.

3) Steer direction shall be controlled by an on/off solenoids at the base (2 x solenoid contacts) (1 solenoid will control left, 1 solenoid will control right).

2) Differential Steering

1) While turning, the speed for right and left traction wheel shall be adjusted to avoid skidding and tearing of the rubber tires.

2) While steering in right direction, speed of left traction wheel will be more than speed of right traction wheel.

3) While steering in left direction, speed of right traction wheel will be more than speed of left traction wheel

3) Steering Sensitivity

1) There shall be no change in Steer speed while in Raised Mode.

2) When drive speed is more than 50% of the max. speed, then Steer speed shall be a factor at 1 to the steering speed in Stowed Mode.

3) When drive speed is More than 50% of the max speed, then Steer speed shall be a factor at 0.6 to the steering speed in Stowed Mode.

4) Impact of Steer Angle on Drive Speed limit

1.Drive speed shall be decreased proportionally with increase in steering angle

2.All wheels are Center Aligned, Machine Shall Attain Maximum Allowed Speed.

3.The master traction module creates left and right command speed based on Accel Throttle Position, derived Command Speed Reference and the True Vehicle Angle (calculated from steering angle sensor which is mounted on the right front steered wheel)

4.Drive along with steer full left, Machine Should get Slower as compared to wheels are Center Aligned & Right Side Wheel Speed will be more as compared to Left Side Wheel.

5.Drive along with steer full right, Machine Should get Slower as compared to wheels are Center Aligned & Left Side Wheel Speed will be more as compared to Right Side Wheel.

System Diagram

© 2026 JCB INDIA LTD

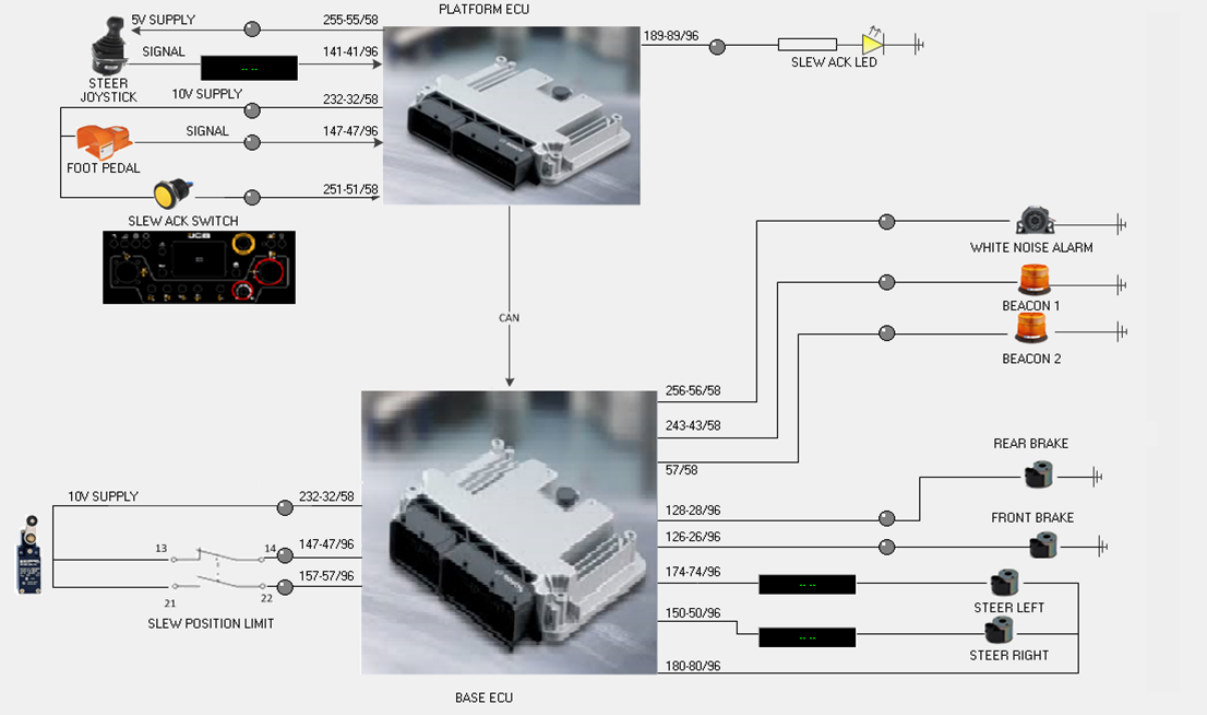

Signal

- The 5V supply is an output from the Bosch platform ecu Pin 55/58
- The 5V ground is returned to Bosch platform ecu Pin 46/96
- The signal from the joystick is 0.5 - 4.5V depending on joystick position 41/96
- Foot pedal signal is 10V when the foot pedal is pressed and open circuit when unpressed pin 47/96
- The Front and Rear brakes will be powered off when the drive command is active.
- The left solenoid is a proportional output from the base controller pin 74/96
- The right solenoid is a proportional output from the base controller pin 50/96
- The forward and reverse both share a negative return path back to the base controller Pin 80/96

Parts in Circuit

- Joystick - Drive/Steer 342
- Platform ECU 325

© 2026 JCB INDIA LTD

- Base ECU 292
- Front Brake 262
- Main Control Valve 249

Related Fault Codes

Fault Code	Description
B1088-17 633	Steer solenoid high side both functions - Circuit short to high (12v)
B1089-16 634	Steer solenoid high side both functions - Circuit short to low
B1090-13 634	Steer solenoid high side and low side both functions - Circuit open
B1091-17 635	Steer solenoid both functions - Valve fault
B1146-17 704	Steer joystick - Circuit short to high (5v)
B1147-16 705	Steer joystick - Circuit open or short to low
B1344-17 891	Steer solenoid low side both functions - Circuit short to high (12v)
B1345-16 892	Steer solenoid low side both functions - Circuit short to low

© 2026 JCB INDIA LTD

3.13 Slew



System Level Function 40 > Slew

Function

- The Slew function allows the turntable to rotate from the base or platform control panel.
- From the platform, the control is via an On/Off/ON switch, the foot pedal must be pressed for the function to operate from the platform
- From the base the operation is via an On/Off/ON switch, the base enable switch must be pressed to operate from the base.
- The Potentiometer position will effect the Slew speed

System Diagram

© 2026 JCB INDIA LTD

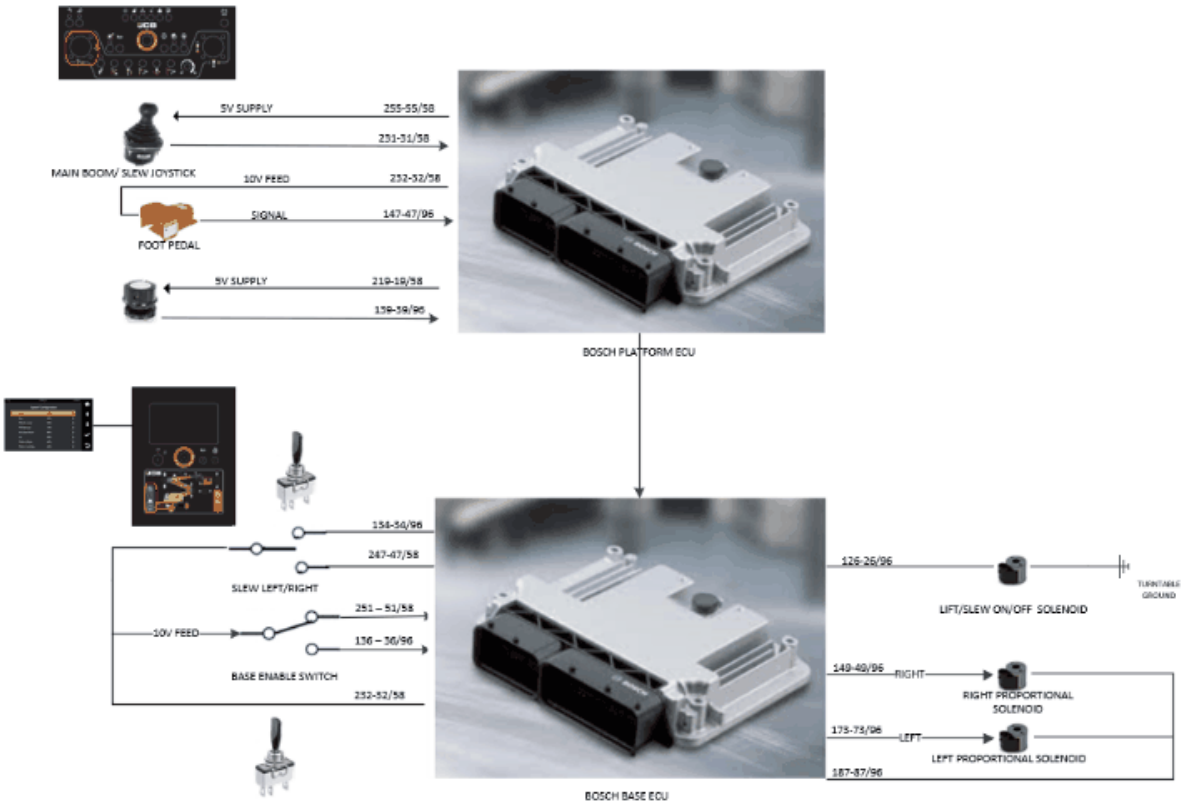

Signal

Platform control

- The platform Joystick is fed from the 5V output from the base ECU. (pin 55/58)
- The joystick is in the center position the signal will be around 2.5V
- Dependent on the direction in which the joystick is pressed the voltage will vary between 0.5V and 4.5V

Base Input

- The base input switch is a toggle switch ON-OFF-ON configuration
- The base input switch is fed from the 10V output from the base ECU. (pin 32/58)
- The switch outputs will be open circuit when the switch is un-pressed
- For slew left the base controller will see 10V on pin 47/58
- For slew right the base controller will see 10V on pin 36/96

© 2026 JCB INDIA LTD

Outputs from base controller

- The outputs for platform are on the main valve control valve. These are proportional solenoids.
- Platform rotate left is fed from 49/96
- Platform rotate right is fed from 73/96
- Slew left and right share the negative feed back to the ecu on Pin 87/96

Parts in Circuit

- Toggle switch ON-OFF-ON 468
- Main boom/ Slew joystick - Platform 345
- Platform ECU 325
- Base ECU 292
- Main Control Valve 249

Related Fault Codes

Fault Code	Description
B1080-17 627	Slew solenoid high side both functions - Circuit short to high (12v)
B1081-16 628	Slew solenoid high side both functions - Circuit short to low
B1082-13 628	Slew solenoid high side both functions - Circuit open
B1083-17 630	Slew solenoid both functions - Valve fault.
B1121-17 675	Slew turntable switch right function - Circuit short to high (10v)
B1122-17 676	Slew turntable switch left function - Circuit short to high (10v)
B1123-92 678	Slew turntable switch both functions - Circuit short to high (10v)
B1124-16 679	Slew turntable switch right function - Circuit short to low
B1125-16 681	Slew turntable switch left function - Circuit short to low
B1150-17 709	Slew joystick - Circuit short to high (5v)

© 2026 JCB INDIA LTD

B1151-16 710	Slew joystick - Circuit open or short to low
B1338-17 885	Slew solenoid low side both functions - Circuit short to high (12v)
B1339-16 887	Slew solenoid low side both functions - Circuit short to low
B1340-13 888	Slew solenoid low side both functions - Circuit open

© 2026 JCB INDIA LTD

3.14 Limit Switch Position

Limit Switch Position

System Level Function 40 > Limit Switch Position

System Diagram

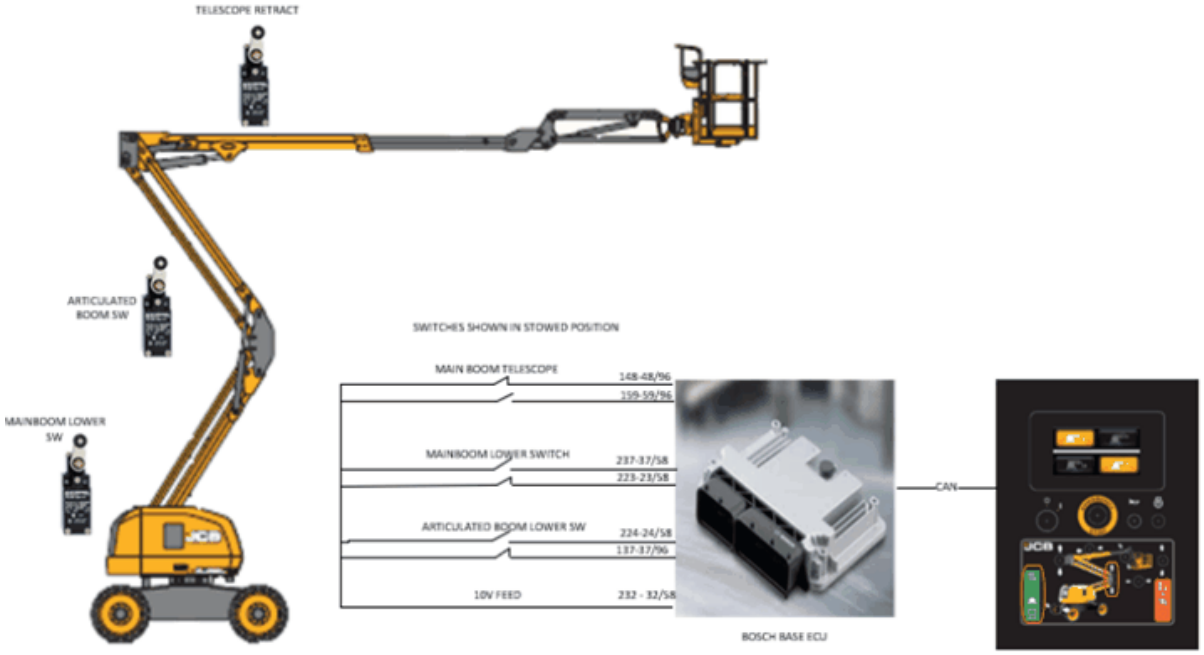

3.15 Platform Rotate

Platform Rotate

System Level Function 40 > Platform Rotate

Function

© 2026 JCB INDIA LTD

- The Platform rotate function allows the platform to rotate from the base or platform control panel.
- From the platform, the control is via an On/Off/ON switch, the foot pedal must be pressed for the function to operate from the platform
- From the base the operation is via an On/Off/ON switch, the base enable switch must be pressed to operate from the base.
- The Potentiometer position will effect the platform rotate speed

System Diagram

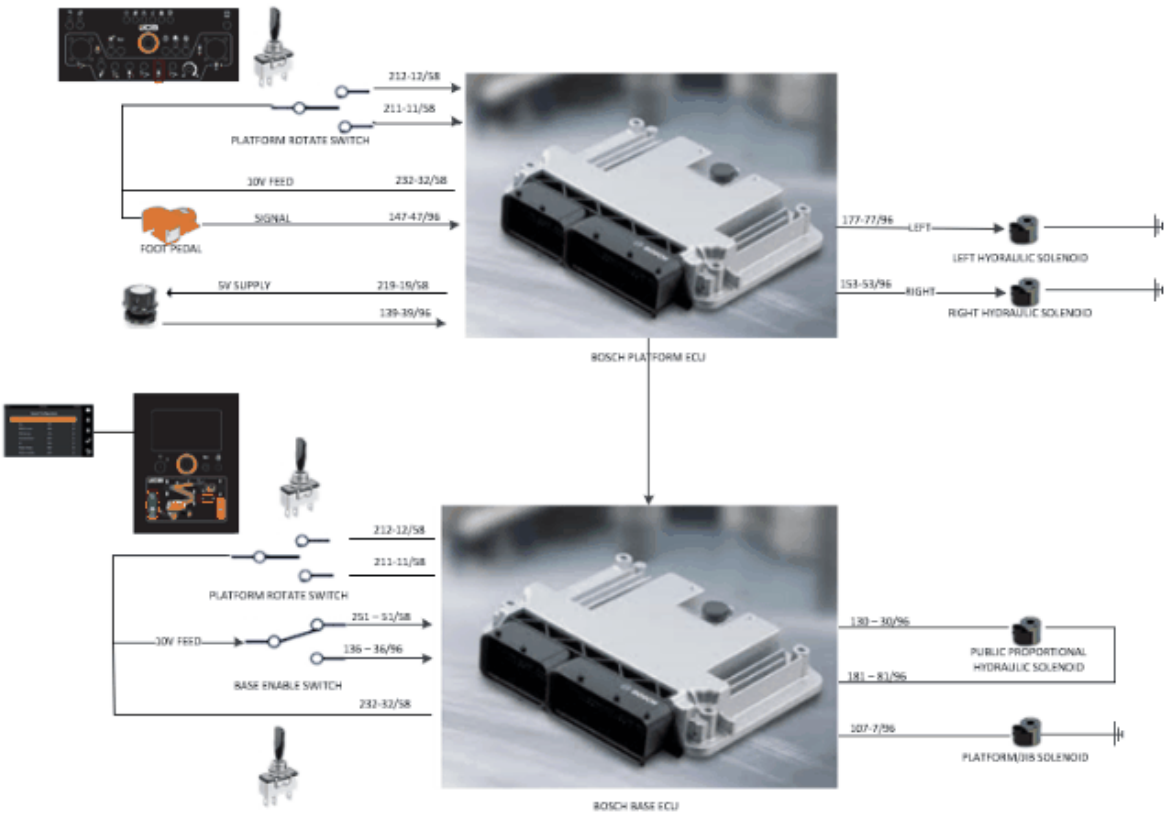

Signal

Platform control

- The platform input switch is a toggle switch ON-OFF-ON configuration
- The platform input switch is fed from the 10V output from the base ECU. (pin 32/58)

© 2026 JCB INDIA LTD

- The switch outputs will be open circuit when the switch is un-pressed
- For Platform rotate left the base controller will see 10V on pin 12/58
- For Platform rotate right controller will see 10V on pin 11/58

Base Input

- The base input switch is a toggle switch ON-OFF-ON configuration
- The base input switch is fed from the 10V output from the base ECU. (pin 32/58)
- The switch outputs will be open circuit when the switch is un-pressed
- For Platform rotate left the base controller will see 10V on pin 12/58
- For Platform rotate right the base controller will see 10V on pin 14158

Outputs from base controller

- The outputs for platform are on the main valve control valve. These are proportional solenoids.
- Platform rotate left is fed from 53/96
- Platform rotate right is fed from 77/96
- Jib raise and lower share the negative feed back to the ecu on Pin 83/96

Output from the platform controller

- Platform rotate solenoid high side is 53/96
- Platform rotate solenoid low side is 83/96

Parts in Circuit

- Toggle switch ON-OFF-ON - TCP 503
- Toggle switch ON-OFF-ON - PCP 361
- Platform ECU 325
- Base ECU 292
- Main Control Valve 249
- Platform Control Valve 228

© 2026 JCB INDIA LTD

Related Fault Codes

Fault Code	Description
B1106-17 652	Platform rotate turntable switch right function - Circuit short to high (10v)
B1107-17 653	Platform rotate turntable switch left function - Circuit short to high (10v)
B1108-92 655	Platform rotate turntable switch both functions - Signal plausibility failure (10v)
B1109-16 656	Platform rotate turntable switch right function - Circuit short to low
B1110-16 658	Platform rotate turntable switch left function - Circuit short to low
B1167-13 713	Platform rotate solenoid left function - Circuit open or short to high (12v)
B1168-16 714	Platform rotate solenoid left function - Circuit short to low
B1169-13 715	Platform rotate solenoid right function - Circuit open or short to high (12v)
B1170-16 716	Platform rotate solenoid right function - Circuit short to low
B1257-17 809	Platform rotate platform switch right function - Circuit short to high (10v)
B1258-17 810	Platform rotate platform switch left function - Circuit short to high (10v)
B1259-92 811	Platform rotate platform switch both functions - Signal plausibility failure (10v)
B1260-16 813	Platform rotate platform switch right function - Circuit short to low
B1261-16 814	Platform rotate platform switch left function - Circuit short to low

© 2026 JCB INDIA LTD

3.16 Overload

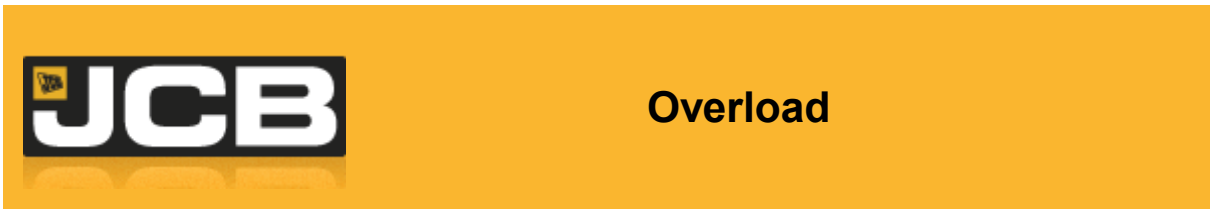

System Level Function 40 > Overload

Function

- The overload system is to stop an operator from overloading the platform and creating an unsafe movement.
- On the A60E/EH machine there is 2 weight zones. This allows different maximum weights in each area.
- The load cell is located at the top of the boom where the platform is connected.
- The platform presses down onto the cell which has 2 channels and is fed into the platform ecu.
- The base ECU will report to the displays the correct weight % is in the platform according to the applicable zone the booms are in.

System Diagram

© 2026 JCB INDIA LTD

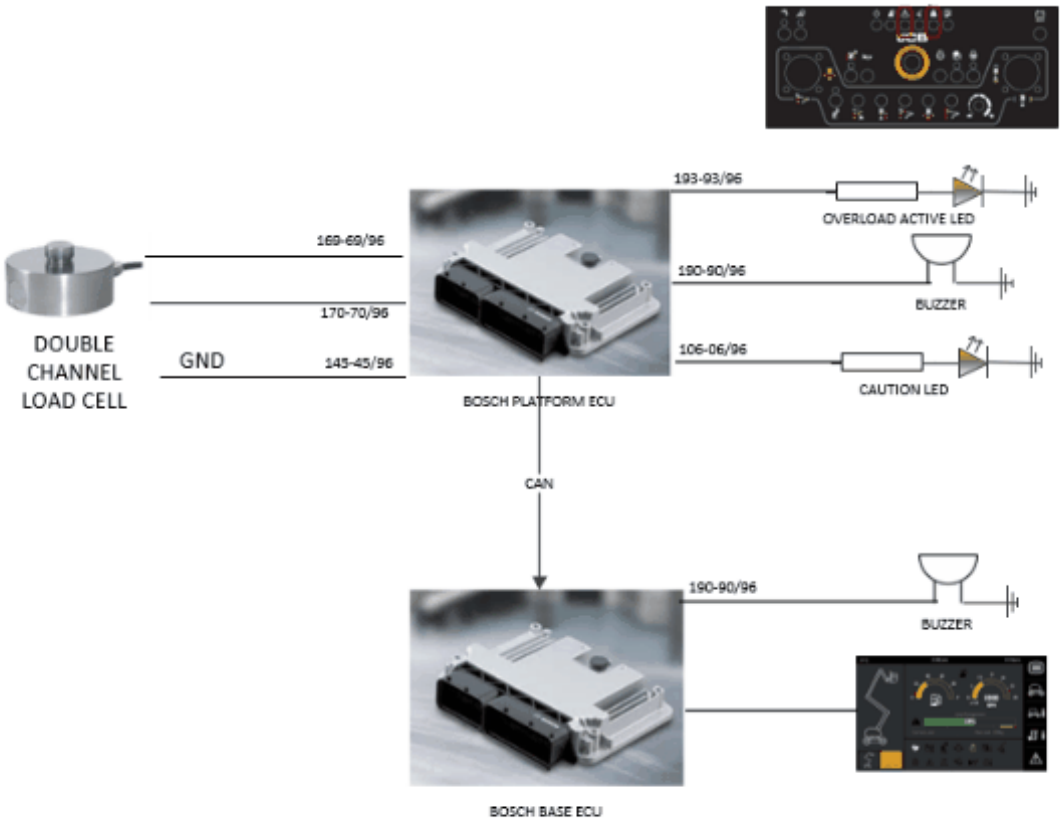

Load Cell Troubleshooting Flow Chart

Please refer ADI - ADI-ACC-003 - Load Cell Troubleshooting

© 2026 JCB INDIA LTD

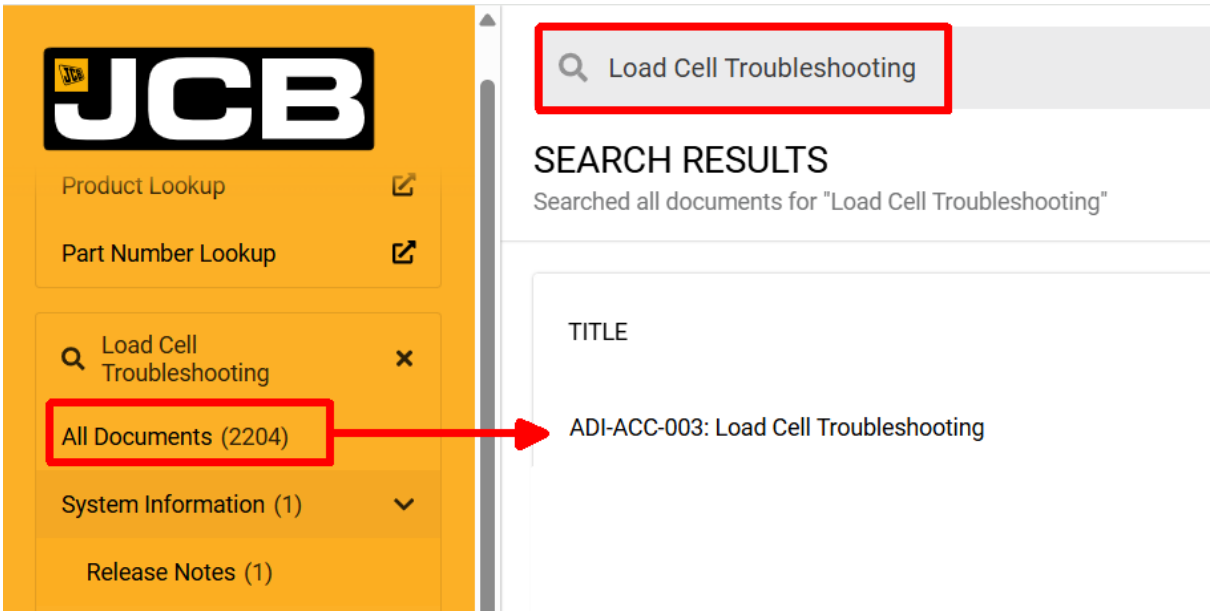

© 2026 JCB INDIA LTD

- Each feed is split over 2 ecu pins.
- Feed 1 goes to pins 68/96 & 69/96
- Feed 2 goes to pins 70/96 & 71/96
- This is fed into the base ecu over CAN1. CAN H is 15/58 CAN L is 16/58

Calibration

Load cell Calibration

1.There is 2 different methods for calibrating the load cell.

Calibration through service master 968

Known Load Calibration from Display 970

Parts in Circuit

- Load cell 232
- Platform ECU 325
- Base ECU 292

Related Fault Codes

Fault Code	Fault Description
B1221-17 769	Overload sensor 1 - Out of range (High)
B1222-16 772	Overload sensor 1 - Circuit open or out of range (Low)
B1223-17 774	Overload sensor 2 - Out of range (High)
B1224-16 776	Overload sensor 2 - Circuit open or out of range (Low)
B1225-27 778	Overload sensor - Signal erratic
B1541-13 906	Weight sensor - No Calibration data available for Load Cell.

© 2026 JCB INDIA LTD

3.17 Main Boom



System Level Function 40 > Main Boom

Function

- The Main Boom Function allows the main boom to be operated from the base or platform control panel.
- The foot pedal must be pressed for the function to operate from the platform
- The base enable switch must be pressed to operate from the base.
- The Potentiometer position will effect the boom speed.
- During downwards boom movement the White Noise Alarm and the Beacon(s) will be active

System Diagram

© 2026 JCB INDIA LTD

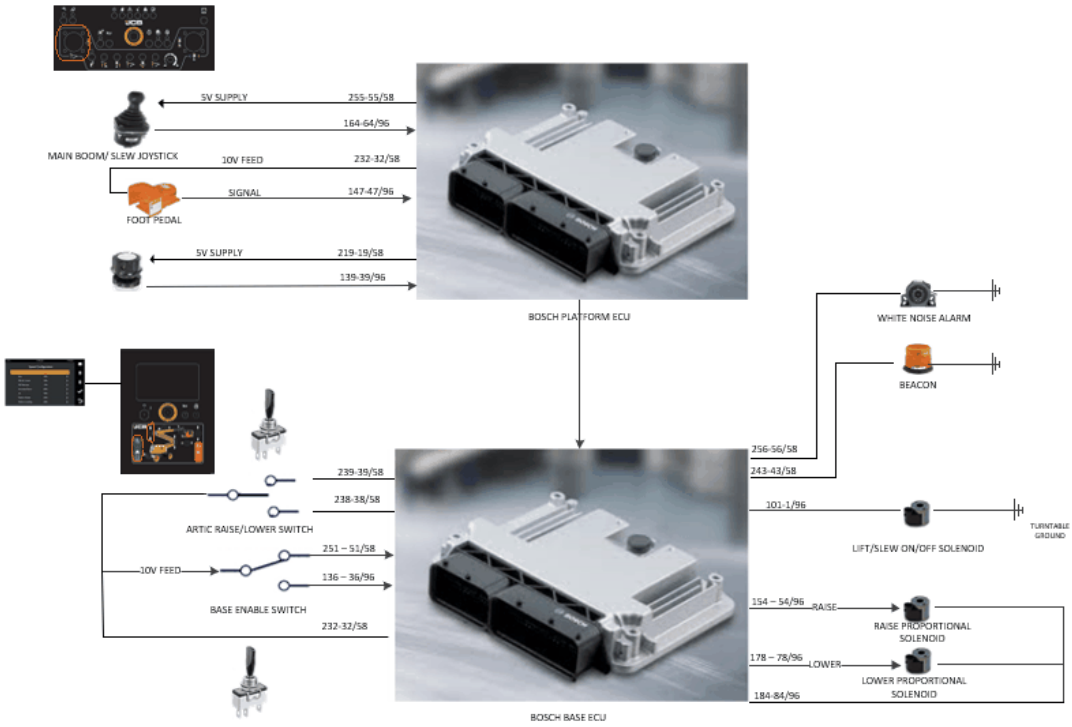

Main Boom Cushioning

Function

1) When main boom is lowered and reaches the main boom limit switch position (main boom limit switch pressed) then main boom should be ramped down in speed to the minimum cushioning current parameter (this will be hard coded).

2) If the main boom is already in the limit switch pressed condition and main boom down switch is pressed, the minimum cushioning current parameter should be used. E.g, do not ramp up to maximum to then ramp down.

Signal

Platform control

- The 5V supply is an output from the Base platform ecu Pin 55/58
- The 5V ground is returned to Base platform ecu Pin 46/96
- The signal from the joystick is 0.5 - 4.5V depending on joystick position 64/96

Base Input

© 2026 JCB INDIA LTD

- The base input switch is a toggle switch ON-OFF-ON configuration
- The base input switch is fed from the 10V output from the base ECU. (pin 32/58)
- The switch outputs will be open circuit when the switch is un-pressed
- For main boom raise the base controller will see 10V on pin 39/58
- For main boom lower the base controller will see 10V on pin 38/58

Outputs

- The outputs for Main boom are on the main valve control valve. These are proportional solenoids.
- Main boom raise is fed from 54/96
- Main boom lower is fed from 78/96
- Main boom raise and lower share the negative feed back to the ecu on Pin 84/96

Parts in Circuit

- Toggle Switch ON-OFF-ON 489
- Joystick Main Boom/Slew 345
- Base ECU 292
- Platform ECU 325
- Main Control Valve 249

Related Fault Codes

Fault Code	Description
B1076-17 623	Main boom solenoid high side both functions - Circuit short to high (12v)
B1077-16 624	Main boom solenoid high side both functions - Circuit short to low
B1078-13 625	Main boom solenoid high side both functions - Circuit open
B1079-17 626	Main boom solenoid both functions - Valve fault
B1116-17 667	Main boom turntable switch raise function - Circuit short to high (10v)

© 2026 JCB INDIA LTD

B1117-17 669	Main boom turntable switch lower function - Circuit short to high (10v)
B1118-92 670	Main boom turntable switch both functions - Signal plausibility failure (10v)
B1119-16 671	Main boom turntable switch raise function - Circuit short to low
B1120-16 673	Main boom turntable switch lower function - Circuit short to low
B1148-17 706	Main boom joystick - Circuit short to high (5v)
B1149-16 708	Main boom joystick - Circuit open or short to low
B1335-17 881	Main boom solenoid low side both functions - Circuit short to high (12v)
B1336-16 883	Main boom solenoid low side both functions - Circuit short to low
B1337-13 884	Main boom solenoid low side both functions - Circuit open
B1341-17 890	MAIN BOOM EXTEND OR RETRACT Solenoid Valve LS SC to High
B1342-16 890	MAIN BOOM EXTEND OR RETRACT Solenoid Valve LS SC to Low

© 2026 JCB INDIA LTD

3.18 Leveling

Leveling

System Level Function 40 > Leveling

Function

- The level function allows the platform to be manually leveled up or down from the base or platform control station.
- From the platform, the control is via an On/Off/ON switch, the foot pedal must be pressed for the function to operate from the platform
- From the base the operation is via an On/Off/ON switch, the base enable switch must be pressed to operate from the base.
- The Potentiometer position will effect the level speed

System Diagram

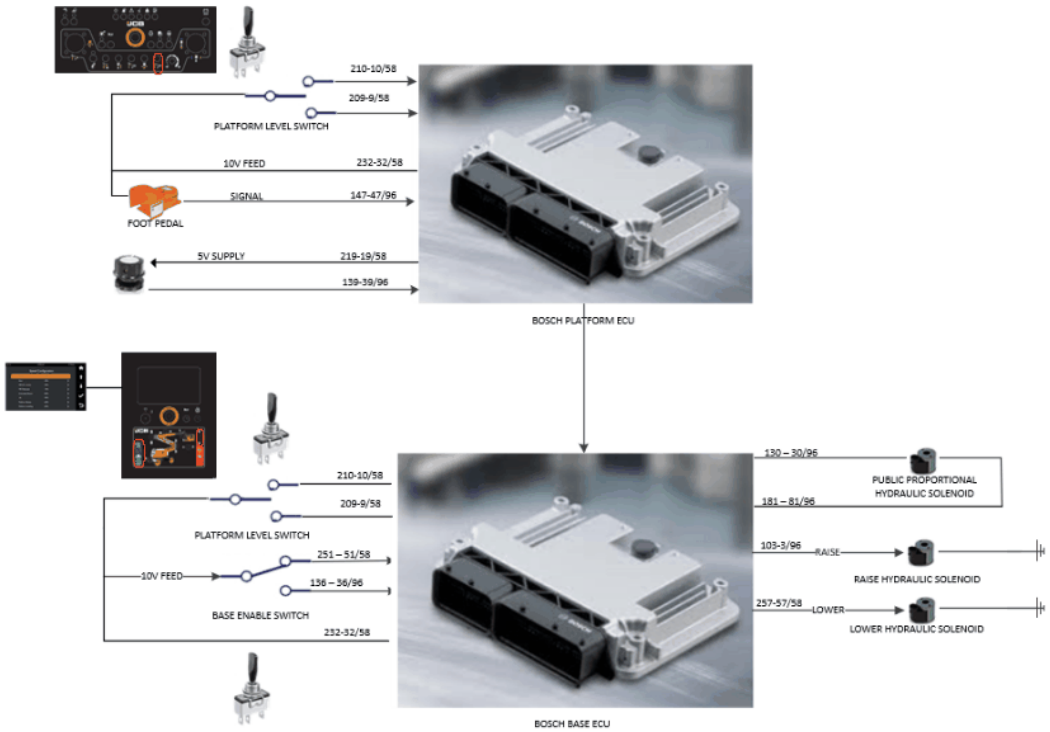

© 2026 JCB INDIA LTD

Signal

Platform control

- The platform input switch is a toggle switch ON-OFF-ON configuration
- The platform input switch is fed from the 10V output from the base ECU. (pin 32/58)
- The switch outputs will be open circuit when the switch is un-pressed
- For level Raise the base controller will see 10V on pin 10/58
- For level Lower the base controller will see 10V on pin 9/58

Base Input

- The base input switch is a toggle switch ON-OFF-ON configuration
- The base input switch is fed from the 10V output from the base ECU. (pin 32/58)
- The switch outputs will be open circuit when the switch is un-pressed
- For level raise the base controller will see 10V on pin 10/96
- For level lower the base controller will see 10V on pin 9/58

Outputs from base controller

- The outputs for Main boom are on the main valve control valve. These are proportional solenoids.
- Level raise is fed from 25/96
- Level lower is fed from 29/96
- Level raise and lower share the negative feed back to the ecu on Pin 79/96

Parts in Circuit

- Toggle switch ON-OFF-ON PCP 367
- Toggle switch ON-OFF-ON TCP 507
- Platform ECU 325
- Base ECU 292
- Main Control Valve 249

© 2026 JCB INDIA LTD

Related Fault Codes

Fault Code	Fault Description
B1039-17 584	PLATFORM LEVELLING DIRECTIONAL Solenoid Valve Raise HS SC to High OR OC
B1040-16 585	PLATFORM LEVELLING DIRECTIONAL Solenoid Valve Raise HS SC to Low
B1041-17 586	PLATFORM LEVELLING DIRECTIONAL Solenoid Valve Lower HS SC to High OR OC
B1042-16 587	PLATFORM LEVELLING DIRECTIONAL Solenoid Valve Lower HS SC to Low
B1071-17 618	PLATFORM LEVELLING RAISE Switch SC to High
B1072-17 619	PLATFORM LEVELLING LOWER Switch SC to High
B1073-92 620	PLATFORM LEVELLING RAISE and LOWER Switches both activated (5 - 10V)
B1074-16 621	PLATFORM LEVELLING RAISE Switch SC to Low
B1075-16 622	PLATFORM LEVELLING LOWER Switch SC to Low
B1242-17 793	PLATFORM LEVELLING RAISE Switch SC to High
B1243-17 794	PLATFORM LEVELLING LOWER Switch SC to High
B1244-92 795	PLATFORM LEVELLING RAISE and LOWER Switches both activated (5 - 10V)
B1245-16 796	PLATFORM LEVELLING RAISE Switch SC to Low
B1246-16 797	PLATFORM LEVELLING LOWER Switch SC to Low

© 2026 JCB INDIA LTD

3.19 Jib

Jib

System Level Function 40 > Jib

Function

-
- The Jib function allows the Jib to raise and lower from the base or platform control panel.
- From the platform, the control is via an On/Off/ON switch, the foot pedal must be pressed for the function to operate from the platform
- From the base the operation is via an On/Off/ON switch, the base enable switch must be pressed to operate from the base.
- The Potentiometer position will effect the Jib speed

System Diagram

© 2026 JCB INDIA LTD

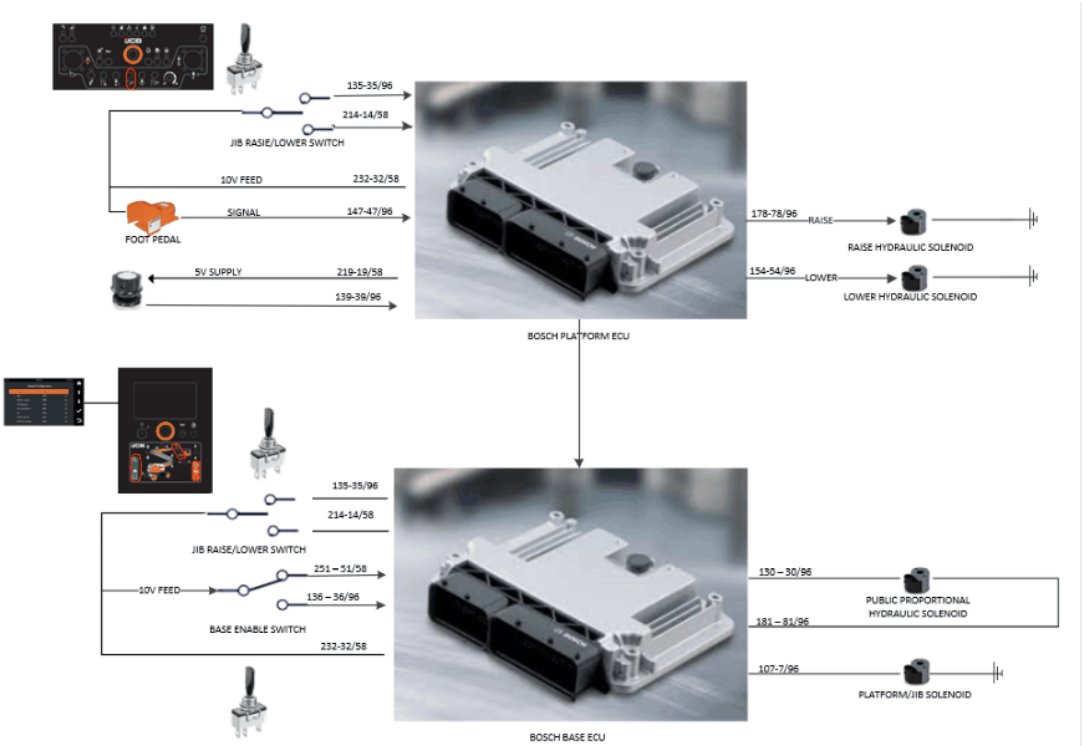

Signal

Platform control

- The platform input switch is a toggle switch ON-OFF-ON configuration
- The platform input switch is fed from the 10V output from the base ECU. (pin 32/58)
- The switch outputs will be open circuit when the switch is un-pressed
- For Jib Raise the base controller will see 10V on pin 35/96
- For Jib Lower the base controller will see 10V on pin 14/58

Base Input

- The base input switch is a toggle switch ON-OFF-ON configuration
- The base input switch is fed from the 10V output from the base ECU. (pin 32/58)
- The switch outputs will be open circuit when the switch is un-pressed
- For Jib raise the base controller will see 10V on pin 35/96
- For Jib lower the base controller will see 10V on pin 14/58

© 2026 JCB INDIA LTD

Outputs from base controller

- The outputs for Jib are on the main valve control valve. These are proportional solenoids.
- Jib raise is fed from 53/96
- Jib lower is fed from 77/96
- Jib raise and lower share the negative feed back to the ecu on Pin 83/96

Parts in Circuit

- Toggle Switch ON-OFF-ON PCP 357
- Toggle Switch ON-OFF-ON TCP 496
- Platform ECU 325
- Base ECU 292
- Main Control Valve 249

Related Fault Codes

Fault Code	Description
B1111-17 660	Jib boom turntable switch raise function - Circuit short to high (10v)
B1112-17 661	Jib boom turntable switch lower function - Circuit short to high (10v)
B1113-92 662	Jib boom turntable switch both functions - Signal plausibility failure (10v)
B1114-16 664	Jib boom turntable switch raise function - Circuit short to low
B1115-16 666	Jib boom turntable switch lower function - Circuit short to low
B1171-13 717	Jib boom solenoid raise function - Circuit open or short to high (12v)
B1172-16 718	Jib boom solenoid raise function - Circuit short to low
B1173-13 719	Jib boom solenoid lower function - Circuit open or short to high (12v)
B1174-16 720	Jib boom solenoid lower function - Circuit open or short to low
B1262-17 815	Jib boom platform switch raise function - Circuit short to high (10v)

© 2026 JCB INDIA LTD

B1263-17 816	Jib boom platform switch lower function - Circuit short to high (10v)
B1264-92 817	Jib boom platform switch both functions - Signal plausibility failure (10v)
B1265-16 818	Jib boom platform switch raise function - Circuit short to low
B1266-16 819	Jib boom platform switch lower function - Circuit short to low
B1329-13 874	JIB/PLATFORM FLOW Sol SC to High or OC
B1330-16 876	JIB/PLATFORM FLOW Sol SC to Low

3.20 Tilt



System Level Function 40 > Tilt

© 2026 JCB INDIA LTD

Function

- The tilt sensor is for monitoring of the inclination of the turntable to ensure the machine stability is maintained.
- The tilt sensor will be calibrated at the Zero position and will allow 5 degrees in the X and Y position.
- All functions will operate when the machine is in the stowed condition and just give the operator a warning that the machine is over 5 degrees of tilt.
- In the raised condition the drive and boom up and slew functions will be blocked.

System Diagram

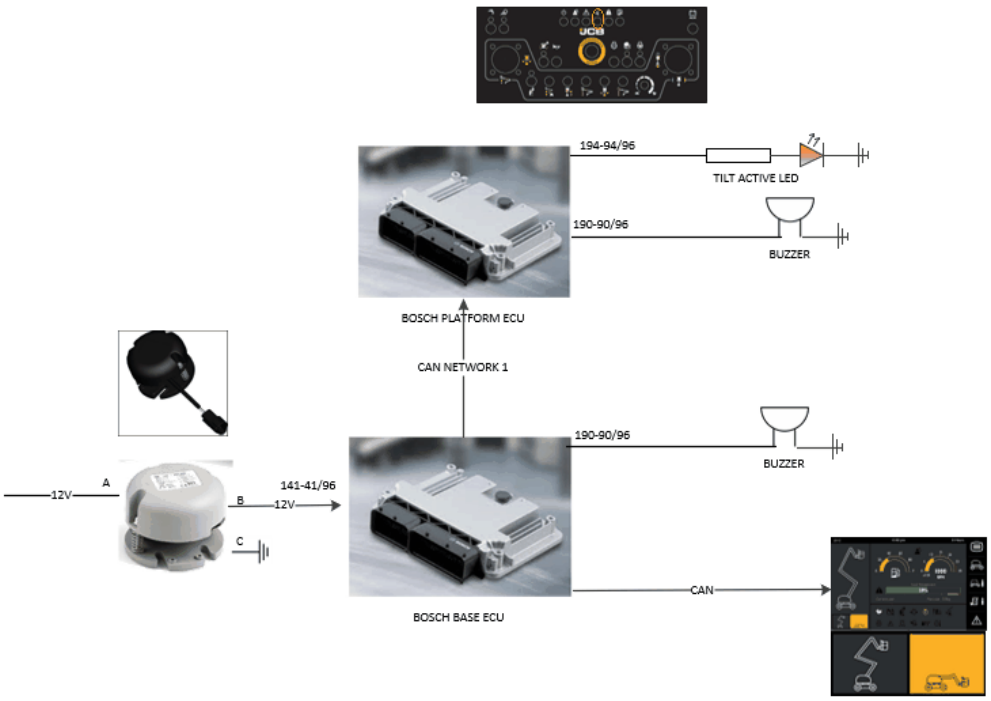

Signal

- The ECU will receive x2 CAN inputs from the sensor in channel 1 and channel 2.

Parts in Circuit

© 2026 JCB INDIA LTD

- Tilt Sensor 242
- Base ECU 292
- Platform ECU 325

Related Fault Codes

Fault Code	Fault Description
B1017-17 559	TILT Sensor SC to High (not possible to detect until sensor connected to 10V)
B1018-16 560	Tilt Sensor short circuit to low

3.21 Telescope



System Level Function 40 > Telescope

Function

- The Telescope function allows the main boom to extend and retract from the base or platform control panel.

© 2026 JCB INDIA LTD

- From the platform, the control is via an On/Off/ON switch, the foot pedal must be pressed for the function to operate from the platform
- From the base the operation is via an On/Off/ON switch, the base enable switch must be pressed to operate from the base.
- The base enable switch must be pressed to operate from the base.
- The Potentiometer position will effect the boom speed
- During retract boom movement the White Noise Alarm and the Beacon(s) will be active

System Diagram

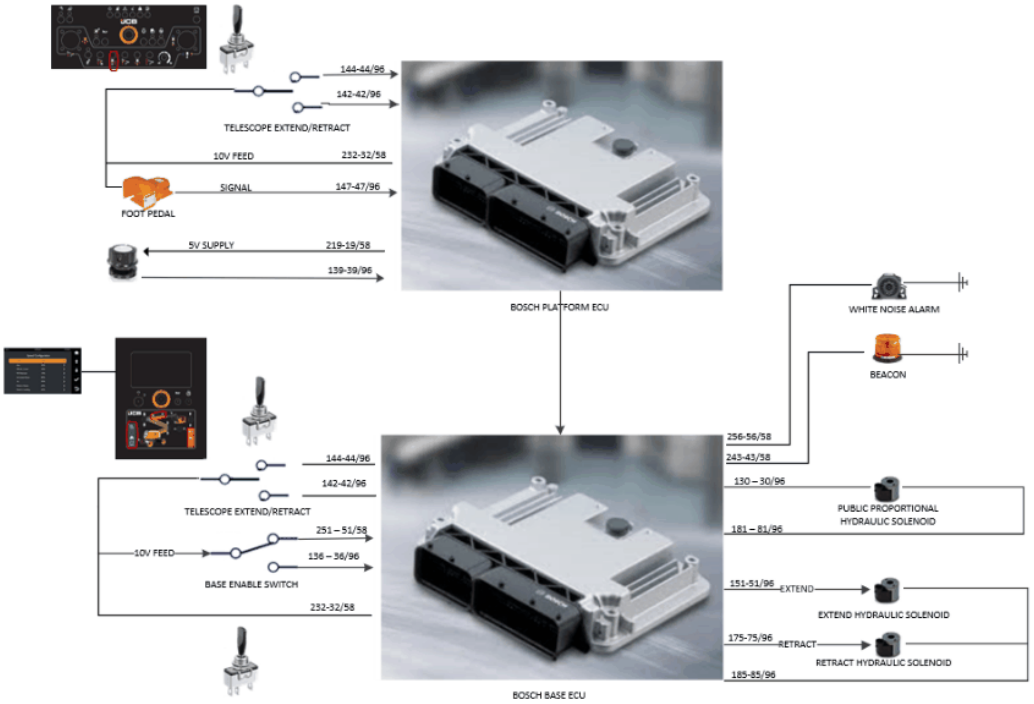

Signal

Platform control

- The platform input switch is a toggle switch ON-OFF-ON configuration
- The platform input switch is fed from the 10V output from the base ECU. (pin 32/58)
- The switch outputs will be open circuit when the switch is un-pressed
- For telescopic extend the base controller will see 10V on pin 44/96

© 2026 JCB INDIA LTD

- For telescopic retract the base controller will see 10V on pin 42/96

Base Input

- The base input switch is a toggle switch ON-OFF-ON configuration
- The base input switch is fed from the 10V output from the base ECU. (pin 32/58)
- The switch outputs will be open circuit when the switch is un-pressed
- For telescope extend the base controller will see 10V on pin 44/96
- For telescope retract the base controller will see 10V on pin 42/96

Outputs

- The outputs for Main boom are on the main control valve. These are proportional solenoids.
- Telescope extend is fed from 51/96
- Telescope retract is fed from 75/96
- Telescope extend and retract share the negative feed back to the ecu on Pin 85/96

Parts in Circuit

- Toggle Switch ON-OFF-ON PCP 348
- Toggle Switch ON-OFF-ON TCP 500
- Platform ECU 325
- Base ECU 292
- Main Control Valve 249

Related Fault Codes

Fault Code	Fault Description
B1084-17 630	MAIN BOOM EXTEND OR RETRACT DIRECTIONAL Solenoid Valve High Side Short Circuit to High OR Short Circuit
B1086-13 631	MAIN BOOM EXTEND OR RETRACT DIRECTIONAL Solenoid Valve High Side & Low Side Open Circuit
B1087-17 632	MAIN BOOM EXTEND OR RETRACT DIRECTIONAL Solenoid Valve Fault
B1138-17 695	Main boom telescopic retract limit switch 1 short circuit to high

© 2026 JCB INDIA LTD

B1139-17 696	Main boom telescopic retract limit switch 2 short circuit to high
B1140-16 697	Main boom telescopic retract limit switch 1 short circuit to low
B1141-13 698	Main boom telescopic retract limit switch 1 and 2 are both open circuit
B1142-16 699	Main boom telescopic retract limit switch 2 short circuit to Low
B1143-92 701	Main boom telescopic retract limit switch 1 and 2 Short to 10V
B1341-17 890	MAIN BOOM EXTEND OR RETRACT Solenoid Valve LS SC to High
B1342-16 890	MAIN BOOM EXTEND OR RETRACT Solenoid Valve LS SC to Low

© 2026 JCB INDIA LTD

3.22 Articulate

Articulate

System Level Function 40 > Articulate

Function

- The Articulated Boom Function allows the main boom to be operated from the base or platform control panel.
- The foot pedal must be pressed for the function to operate from the platform
- The base enable switch must be pressed to operate from the base.
- The Potentiometer position will effect the boom speed
- During retract boom movement the White Noise Alarm and the Beacon(s) will be active

System Diagram

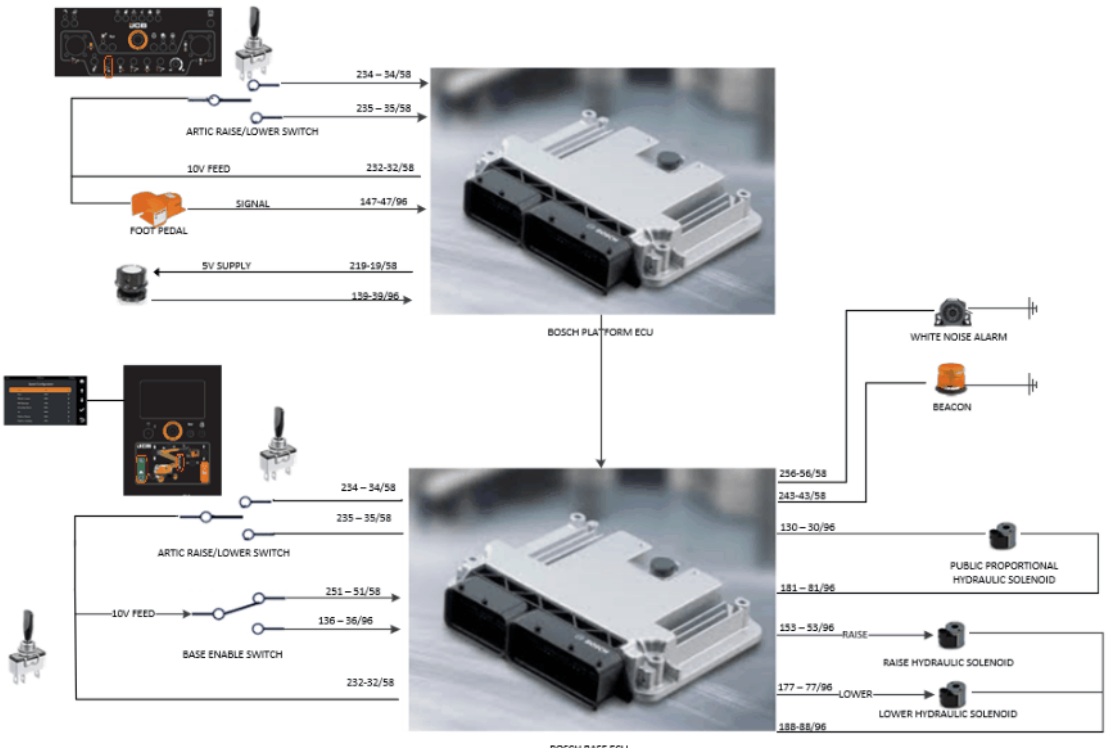

© 2026 JCB INDIA LTD

Signal

Platform control

- The platform input switch is a toggle switch ON-OFF-ON configuration
- The platform input switch is fed from the 10V output from the base ECU. (pin 32/58)
- The switch outputs will be open circuit when the switch is un-pressed
- For arctic boom raise the platform controller will see 10V on pin 34/58
- For arctic boom lower the platform controller will see 10V on pin 35/58

Base Input

- The base input switch is a toggle switch ON-OFF-ON configuration
- The base input switch is fed from the 10V output from the base ECU. (pin 32/58)
- The switch outputs will be open circuit when the switch is un-pressed
- For arctic boom raise the base controller will see 10V on pin 34/58
- For arctic boom lower the base controller will see 10V on pin 35/58

Outputs

- The outputs for Arctic boom are on the main control valve. These are proportional solenoids.
- Arctic boom raise is fed from 26/96
- Arctic boom lower is fed from 1/96
- Arctic boom raise and lower share the negative feedback to Base ECU on pin 81/96

Parts in Circuit

- Toggle Switch ON-OFF-ON PCP 352
- Toggle Switch ON-OFF-ON TCP 493
- Platform ECU 325
- Base ECU 292

© 2026 JCB INDIA LTD

- Main Control Valve 249

Related Fault Codes

Fault Code	Fault Description
B1011-17 553	Artic Boom Lower Limit Switch 1 Short Circuit to High
B1012-17 554	Artic Boom Lower Limit Switch 2 Short Circuit to High
B1013-16 555	Artic Boom Lower Limit Switch 1 Short
B1014-13 556	Artic Boom Lower Limit Switch 1 AND Switch 2 Open Circuit
B1015-16 557	Artic Boom Lower Limit Switch 2 Short Circuit to Low
B1016-92 558	Artic Boom Lower Limit Switch 1 AND Switch 2 short to 10V
B1092-17 636	ARTICULATED BOOM RAISE OR LOWER DIRECTIONAL Solenoid Valve High Side Short Circuit to High
B1093-16 637	ARTICULATED BOOM RAISE OR LOWER DIRECTIONAL Solenoid Valve High Side Short Circuit to Low
B1094-13 638	ARTICULATED BOOM RAISE OR LOWER DIRECTIONAL Solenoid Valve High Side & Low Side Open Circuit
B1095-92 639	ARTICULATED BOOM RAISE OR LOWER DIRECTIONAL Solenoid Valve Fault
B1096-17 639	ARTICULATED BOOM RAISE Switch Short Circuit to High
B1097-17 640	ARTICULATED BOOM LOWER Switch Short Circuit to High
B1098-92 641	ARTICULATED BOOM RAISE & LOWER Switches both activated (5 - 10V)
B1099-16 643	ARTICULATED BOOM RAISE Switch Short Circuit to Low
B1100-16 644	ARTICULATED BOOM LOWER Switch Short Circuit to Low
B1247-17 799	ARTICULATED BOOM RAISE Switch Short Circuit to High
B1248-17 800	ARTICULATED BOOM LOWER Switch Short Circuit to High
B1249-92 801	ARTICULATED BOOM RAISE & LOWER Switches both activated (5 - 10V)
B1250-16 802	ARTICULATED BOOM RAISE Switch Short Circuit to Low
B1251-16 803	ARTICULATED BOOM LOWER Switch Short Circuit to Low

© 2026 JCB INDIA LTD

B1350-17 898	ARTICULATED BOOM RAISE OR LOWER DIRECTIONAL Solenoid Valve Low Side Short Circuit to High
B1351-16 899	ARTICULATED BOOM RAISE OR LOWER DIRECTIONAL Solenoid Valve Low Side Short Circuit to Low

3.23 Generator



System Level Function 40 > Generator

Function

- There is a 7.5KW hydraulic generator that can be fitted to the machine.
- This is a 3 phase 208V generator that has a 3phase connection and x2 single phase connections at the platform.
- There is also a spare single phase connection at the generator face plate that can be used.

© 2026 JCB INDIA LTD

- The generator has its own circuit protection built into the generator.
- A 25A GFP and MCB to protect the 3 phase circuits.
- A 20A GFCI on the single phase

System Diagram

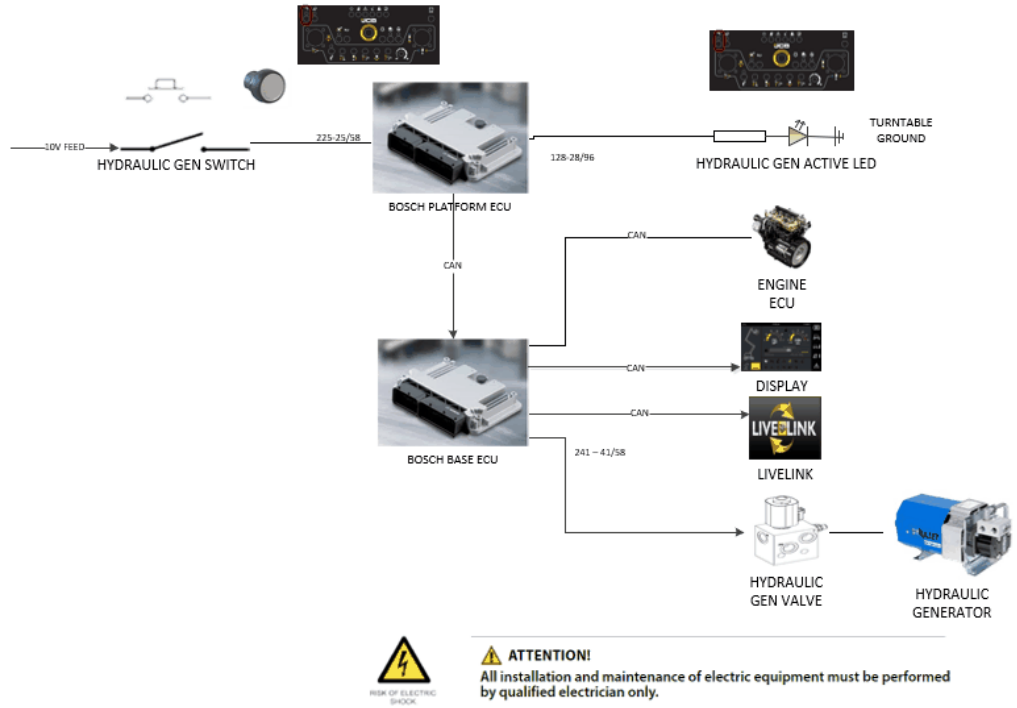

- To turn the generator on the engine must be running and the hydraulic generator button pressed.
- When the Switch is enabled the base ecu will apply 12V on the hydraulic generator solenoid and set the engine RPM to 1800RPM.
- This will provide 208V phase phase and 110V single phase to the platform connectors.
- The cables that run up the booms are extension leads that are plugged into the generator body.
- This equipment should be regularly inspected to local regulatory legislation.
- It should have regular visual inspection and PAT testing to ensure the product is safe.

© 2026 JCB INDIA LTD

Related Fault Codes

Fault Code	Fault Description
B1215-17 766	Hydraulic generator button - Circuit short to high (10v)
B1216-16 767	Hydraulic generator button - Circuit short to low
B1217-24 768	Hydraulic generator button - signal stuck high
B1355-16 902	Hydraulic Generator - Solenoid - Circuit short to low
B1356-13 903	Hydraulic Generator - Solenoid high side - Circuit open or short to high (12v)

3.24 Fuel Level



© 2026 JCB INDIA LTD

System Level Function 40 > Fuel Level

Function

- Fuel sender indicates how much fuel present In the fuel tank of the machine.
- Low fuel warning shall turn on the low fuel icon at the display and at the platform control station after 30 seconds when the Fuel level is between 25% and 10%.

System Diagram

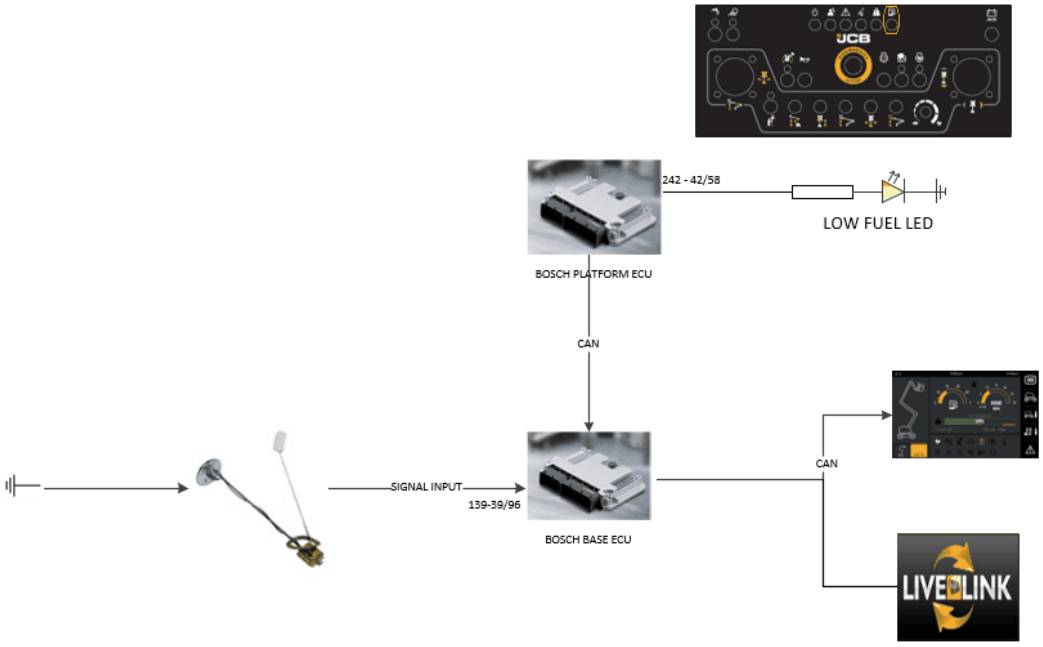

Signal

Pin	Description	Connector Number	Wire Number	Signal
1	12V input	C28_TH	4033	Resistance to GND based on the level of fuel
2	GND	C28_TH	6033	

© 2026 JCB INDIA LTD

Internal Electric Schematic IMG

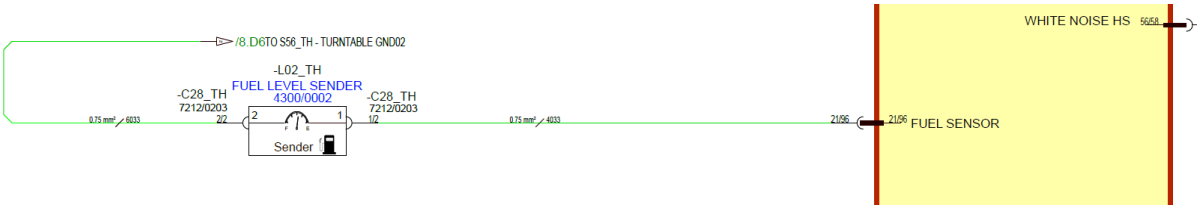

Testing

1. Turn the ignition ON.
2. Keep the Fuel level between 25% to 10%, verify the Fuel sensor led on display
3. Keep the Fuel level less than 10%, verify the Fuel sensor led on display

Expected Values:

- Fuel sensor Led :- On
- Fuel sensor Voltage :- 3.3V

Related Fault Codes

Fault Code	Fault Description
B1232-17 783	FUEL SENDER OOR High OR DIRTY AIR FILTER SC to HIGH OR COOLANT LEVEL SWITCH SC to HIGH
B1233-16 784	FUEL SENDER OOR Low
B1282-13 839	Water in fuel OC during engine startup: (Transition from GND to OC is expected within 2 secs of engine ignition ON)
B1286-16 843	Water in fuel short to ground
B1287-2F 844	FUEL SENDER Data Erratic

© 2026 JCB INDIA LTD

3.25 Oscillating Axle

Oscillating Axle

System Level Function 40 > Oscillating Axle

Function

- The Oscillating axle is a function that the allows the front axle to float to allow a better drive control on rough terrain.
- The function is controlled via the software which allows the axle to float in the stowed drive conditions.
- The axle will remained locked in all other conditions.

System Diagram

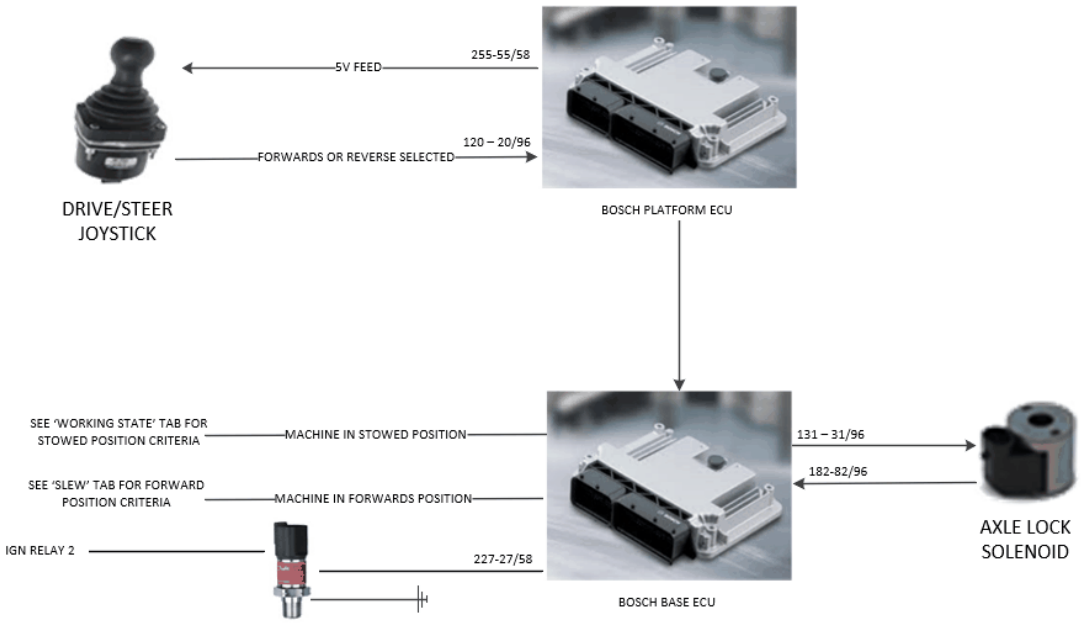

© 2026 JCB INDIA LTD

Signal

Platform control

- The drive joystick must be in a drive condition for the unlock to happen

Base Input

- The pressure sensor is 0.5-5V signal that varies by the pressure and is fed into the base ECU in pin 27/58
- The position control position is also read to understand the stowed or raised position of the machine.

Outputs from base controller

- The Oscillating Axle solenoid is on the Chassis control valve
- The high side out is from pin 31/96 and return path to pin 82/96
- The solenoid is activated to float the axle, stowed condition and driving.

Parts in Circuit

Pressure Sensor 223

Chassis Control Valve 262

Platform ECU 325

Base ECU 292

Oscillating Axle Solenoid 262

Related Fault Codes

Fault Code	Fault Description
B1043-17 588	OSCILLATING AXLE Solenoid Valve HS SC to High
B1044-16 589	OSCILLATING AXLE Solenoid Valve HS SC to Low
B1045-13 590	OSCILLATING AXLE Solenoid Valve HS & LS OC
B1227-17 780	Oscillating axle lock pressure sensor - Circuit short to high (12v)

© 2026 JCB INDIA LTD

B1228-16 782	Oscillating axle lock pressure sensor - Circuit open or short to low
B1236-2F 786	OSCILLATING AXLE PRESSURE SENSOR Failure
B1238-2F 788	OSCILLATING AXLE PRESSURE SENSOR <1v when output is active
B1272-2F 826	OSCILLATING AXLE PRESSURE SENSOR >= 1V and < 6V in stowed mode without drive
B1288-2F 845	OSCILLATING AXLE PRESSURE SENSOR SOFTWARE Failure
B1301-2F 848	OSCILLATING AXLE PRESSURE SENSOR FAILURE
B1347-17 893	OSCILLATING AXLE Solenoid Valve LS SC to High
B1348-16 895	OSCILLATING AXLE Solenoid Valve LS SC to Low
B1349-13 896	OSCILLATING AXLE Solenoid Valve Fault

© 2026 JCB INDIA LTD

3.26 Override

Override

System Level Function 40 > Override

Machine Override system - Base Control

- The machine override safety system will allow operator to rescue in case of any fault activated during working from platform (i.e. platform overload, Crush protection fault, Platform start lock fault etc).
- If this emergency feature is used by operator a fault tell-tale will be displayed at base display which will be reset by JCB service Engineer.

Steps to activate Override system-

- From Base control Panel, make the IGN switch off then press the override toggle switch.
- With holding override toggle switch in pressed condition, make ignition switch ON.
- Override window will appear at base display.
- Perform the desired boom operations from base control Panel (Boom/jib lowering, retraction operations etc.) to rescue the operator.

Machine Override system - Platform Control

The override function from the platform control station is very similar to the AUX function.

The difference is:

- Functions will only operate one at a time,
- Faults with the weight sensor will be ignored
- Overload Warning will be ignored
- Pop up on display screen

System Diagram

© 2026 JCB INDIA LTD

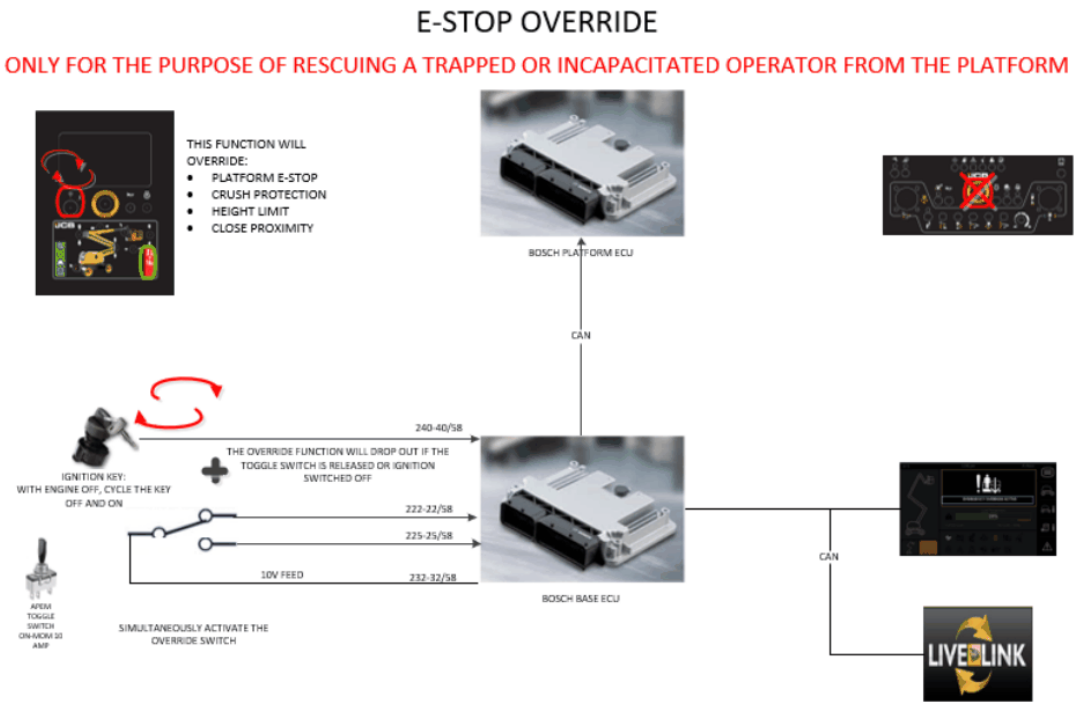

3.27 Drive

Drive

System Level Function 40 > Drive

Function

- The drive function allows the machine to travel forwards and backwards.
- The speed of the drive operation will be reduced when the machine is in the raised condition.
- The stowed or raised condition will be considered in Position Control
- The drive can also be effected by the Slew Acknowledgment depending on the slew position of the machine.
- The Potentiometer position will effect the drive speed.

© 2026 JCB INDIA LTD

- To Operate drive, the foot pedal pressed with the direction command via Joystick on Platform control panel.
- There is no Drive available with AUX pump
- The brakes on the machine will be released when a drive command is active.
- During travel the White Noise Alarm and the Beacon(s) will be active.

System Diagram

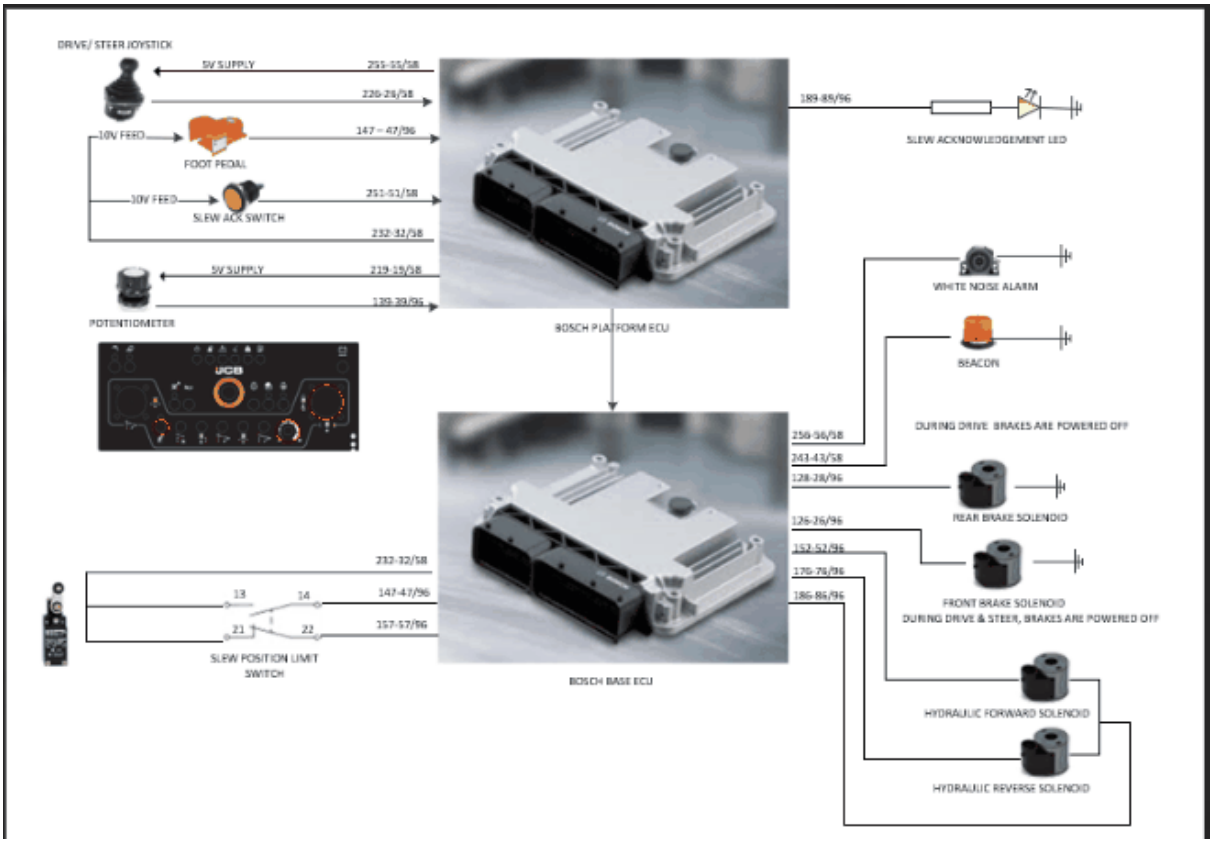

Signal

- The 5V supply is an output from the Bosch platform ecu Pin 55/58
- The 5V ground is returned to Bosch platform ecu Pin 46/96
- The signal from the joystick is 0.5 - 4.5V depending on joystick position 26/58
- Foot pedal signal is 10V when the foot pedal is pressed and open circuit when unpressed

© 2026 JCB INDIA LTD

- The Front and Rear brakes will be powered off when the drive command is active. These are a 12V output from the base controller (Front brakes pin 28/96, Rear brakes 26/96)
- The forward solenoid is a proportional output from the base controller pin 52/96
- The reverse solenoid is a proportional output from the base controller pin 76/96
- The forward and reverse both share a negative return path back to the base controller Pin 86/96

Parts in Circuit

- Joystick - Drive/Steer 342
- Base ECU 292
- Platform ECU 325
- Front Brake 262
- Rear Brake 262

Related Fault Codes

Fault Code	Fault Description
B1069-17 615	Drive joystick - Circuit short to high (5v)
B1070-16 617	Drive joystick - Circuit open or short to low

© 2026 JCB INDIA LTD

3.28 Display Functions



System Level Function 40 > Display Functions

List of Display Function 119

Sr No.	Component
1	Setting Time 119
2	Setting Date 121
3	Setting Units 122
4	Setting Brightness 123
5	Speed Configuration 125
6	Setting Travel Alarm 127
7	Setting Language 128
8	Setting Load Cell Calibration 130

3.28.1 Setting Time



System Level Function 40 > Display Functions 119 > Setting Time

To Set the time in the display menu

1. Select Display settings
2. Select 'Time' using the arrows and tick button

© 2026 JCB INDIA LTD

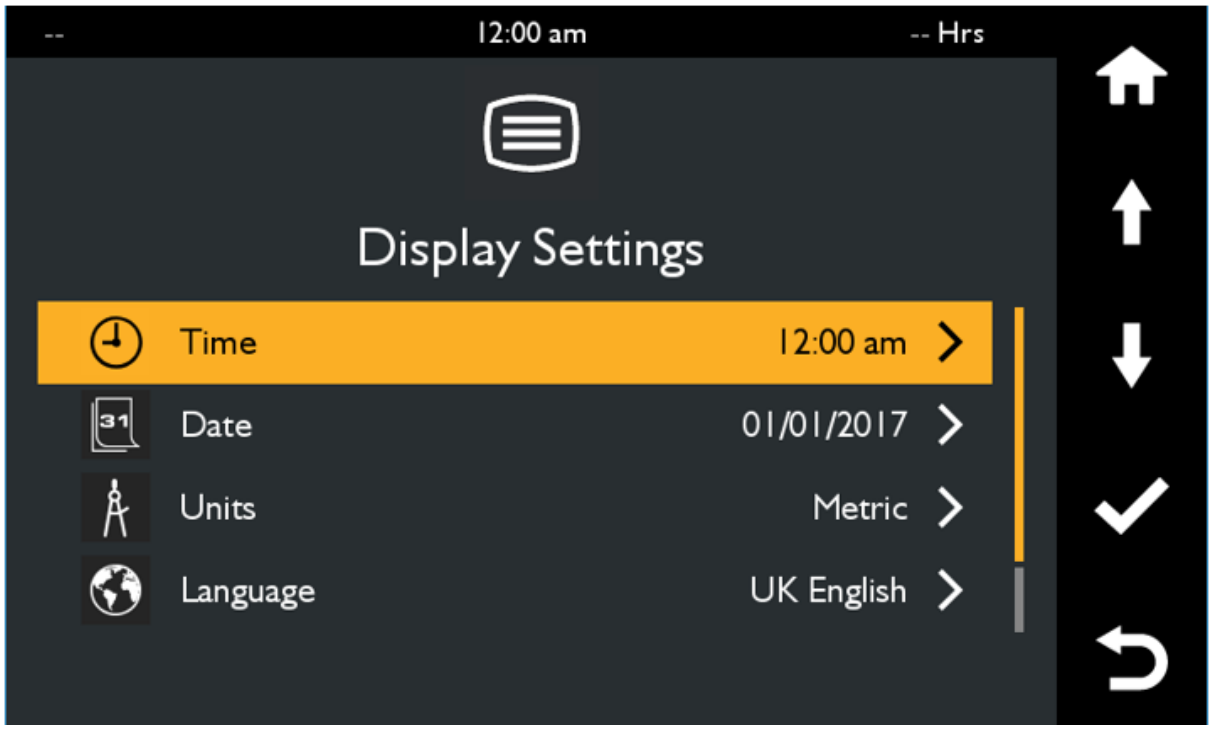

3.This screen allows the operator to select between 12/24Hr clock and also to set the time.

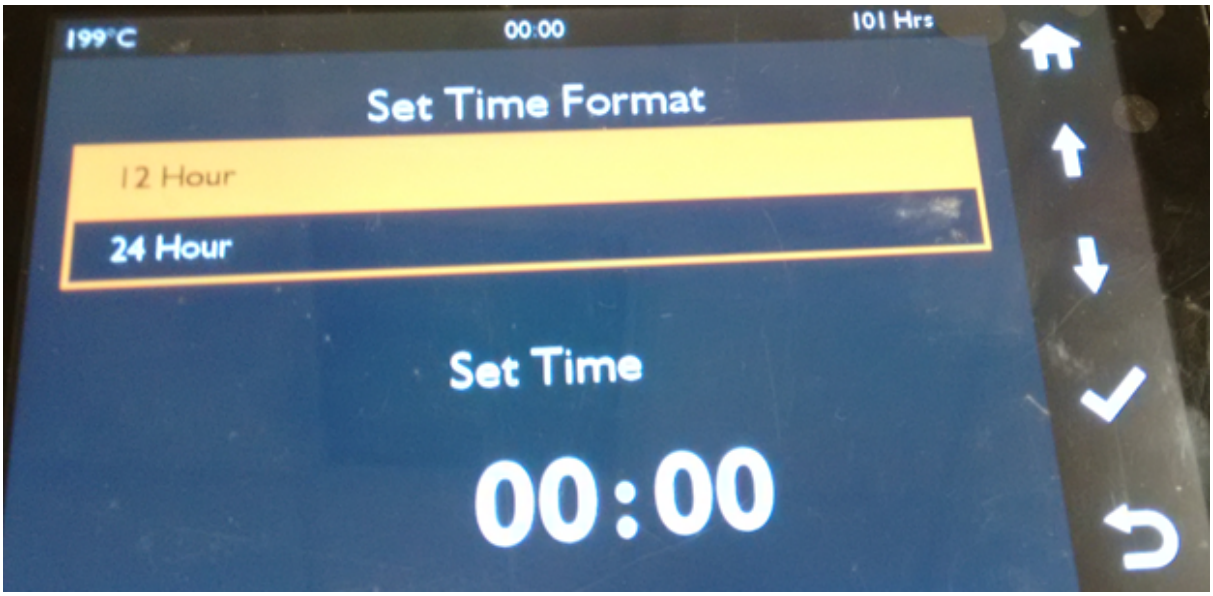

Use the arrow keys to select up and down and the tick button to set.

© 2026 JCB INDIA LTD

3.28.2 Setting Date



System Level Function 40 > Display Functions 119 > Setting Date

To Set Date in the display menu

1. Select display settings.
2. Select 'Date' from the menu using the arrow keys and the tick to select.

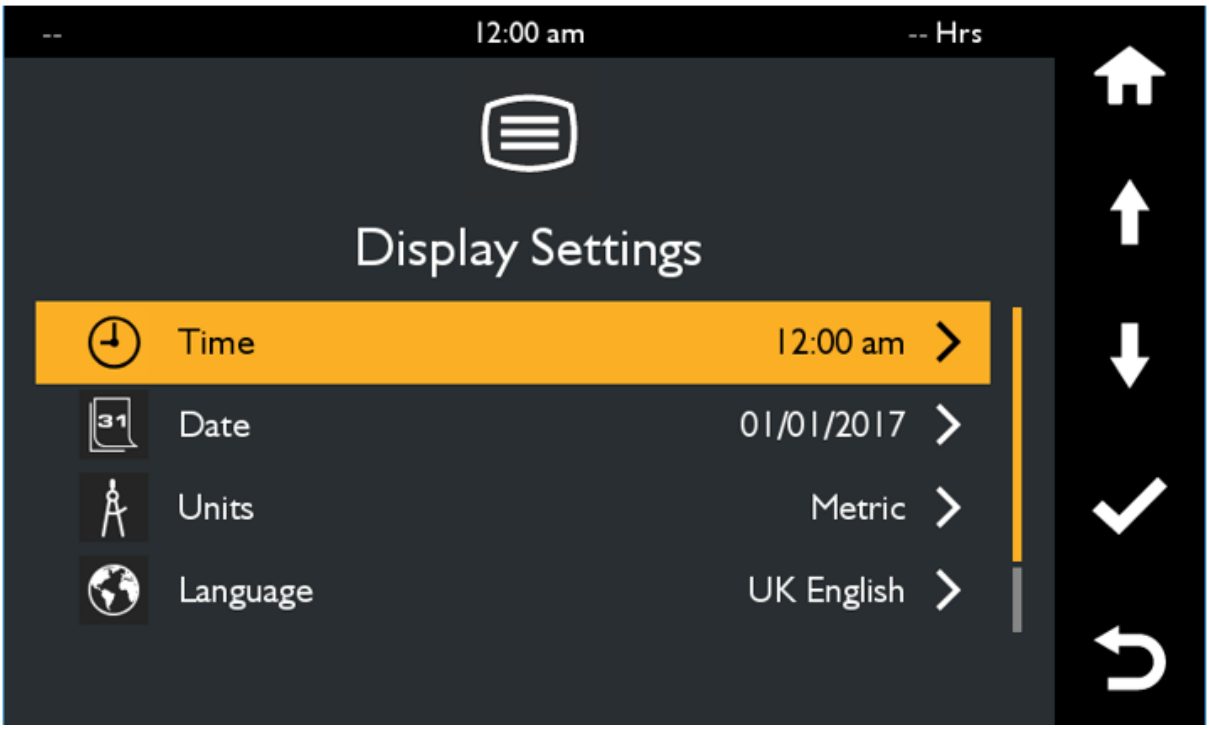

3. This screen allows to set the format and date to the machine.

© 2026 JCB INDIA LTD

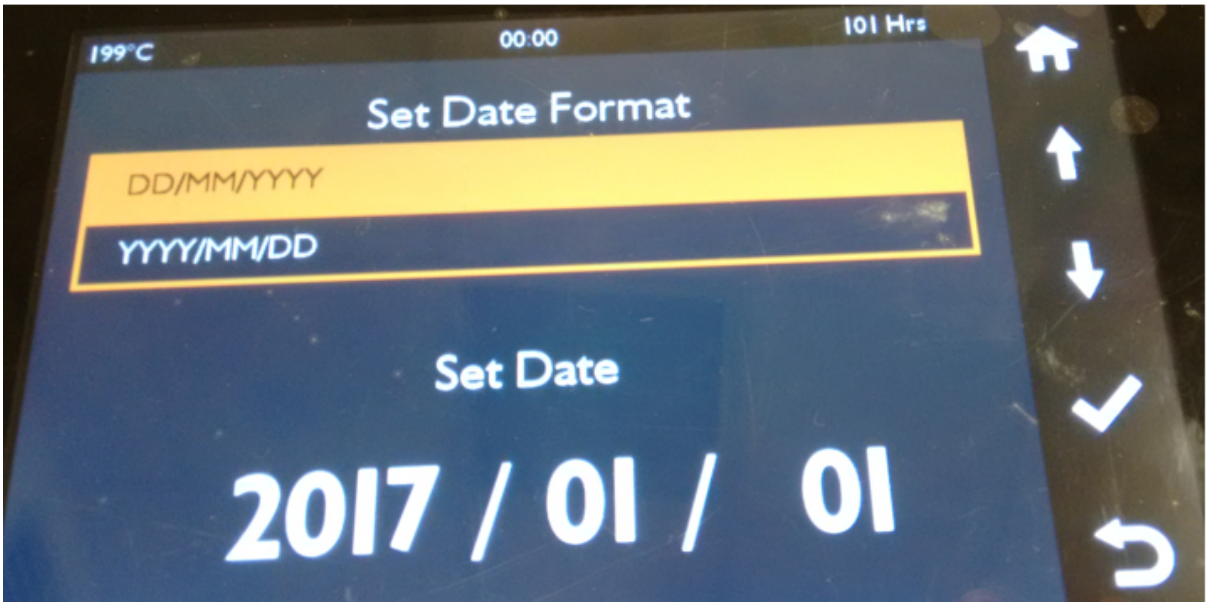

Using the arrows keys to navigate up and down the the tick button to select.

3.28.3 Setting Units



System Level Function 40 > Display Functions 119 > Setting Units

Setting units in the display menu

1. Select Display settings
2. Select 'Units' using the arrows and tick button

© 2026 JCB INDIA LTD

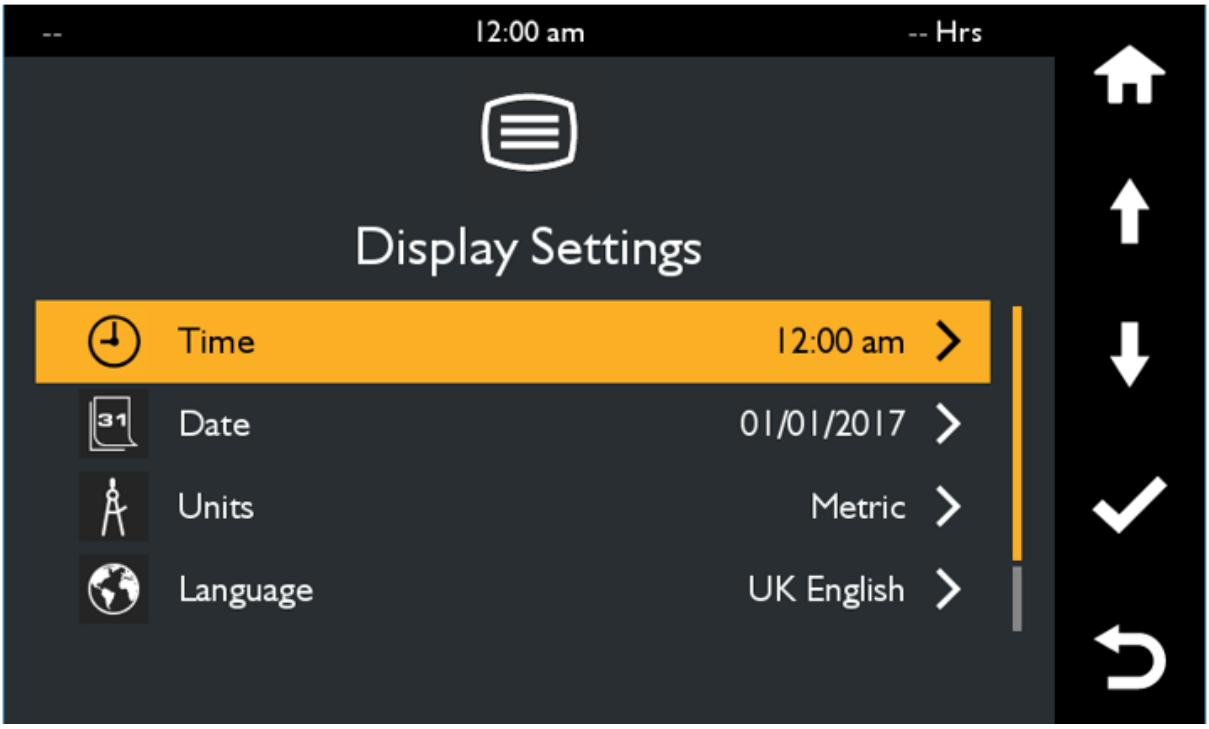

3. Using the arrow keys the operator can select between 'Metric' and 'Imperial'

3.28.4 Setting Brightness



System Level Function 40 > Display Functions 119 > Setting Brightness

To Set the 'Brightness' in the display menu

1. Select Display settings
2. Select 'Brightness' using the arrows to scroll down and tick to select

© 2026 JCB INDIA LTD

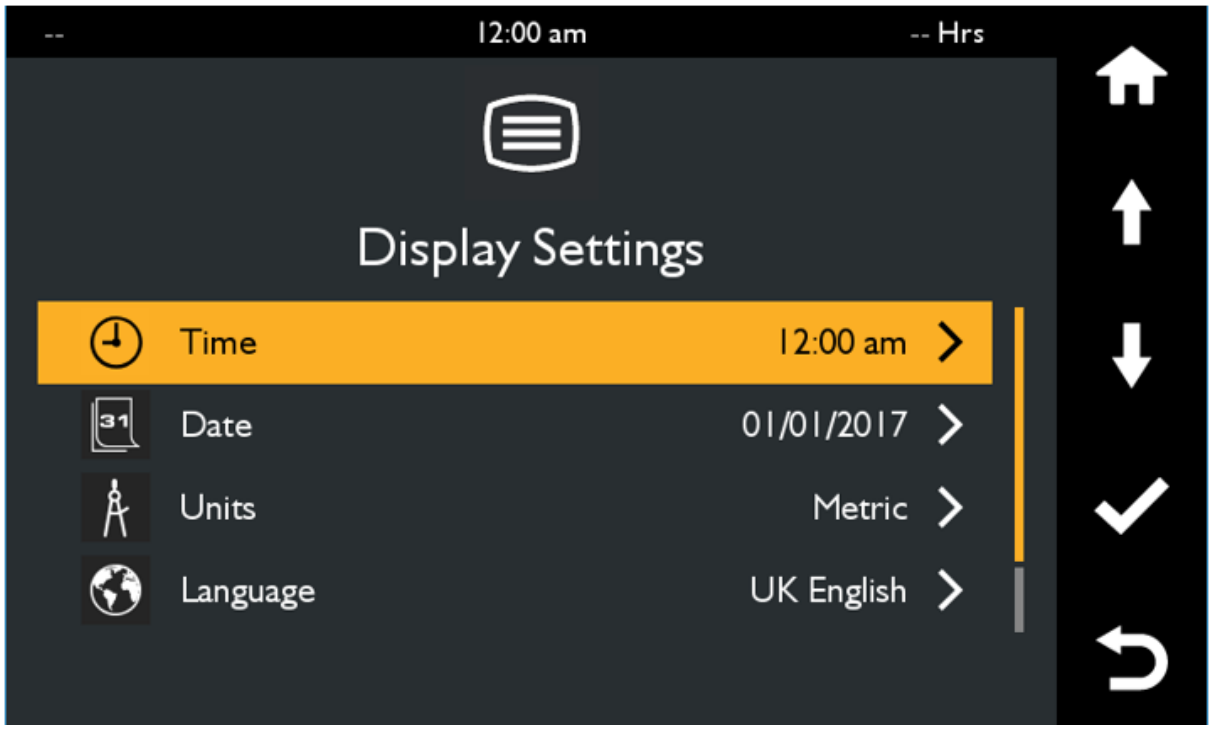

3. Use the arrow keys to select required brightness.



4. Use the tick to confirm selection.

© 2026 JCB INDIA LTD

3.28.5 Speed Configuration



System Level Function 40 > Display Functions 119 > Speed Configuration

To Set the configure speeds in the display menu

This allows an operator to adjust machine speeds per function. The machine will be set at 100% as it leaves the factory but may be slowed down for new operators or un-familiar operators or even block a function off. For example if you didnt want to allow slew this function could be set to 0%

1. Select 'machine settings'

2. Select 'Speed configuration' using the arrows and tick button

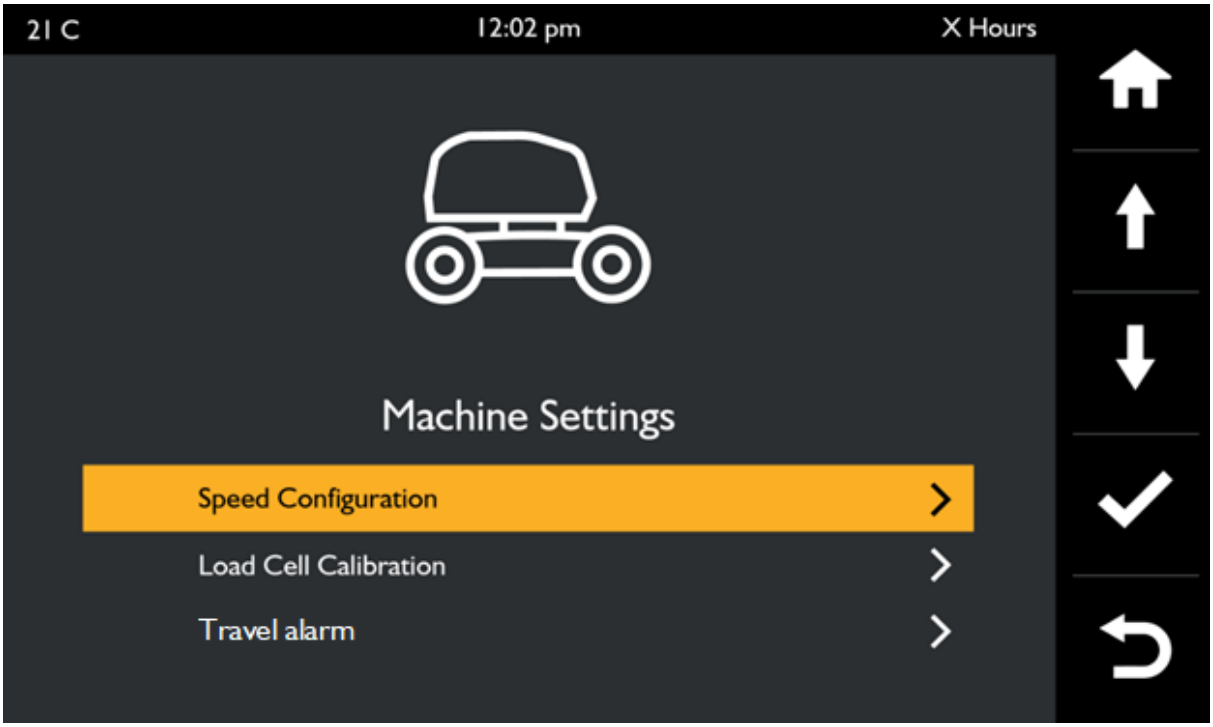

3. Using the arrow buttons then select the desired function and use the tick to select

© 2026 JCB INDIA LTD

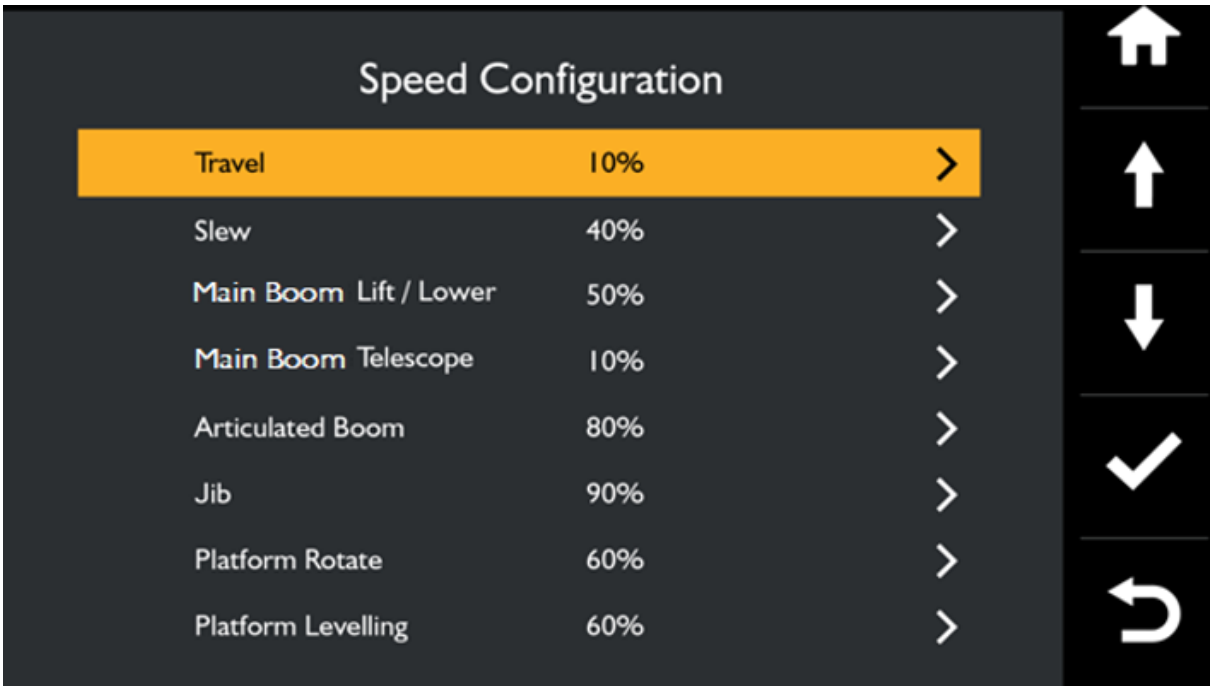

4. Use the up and down arrows to adjust the % speed allowed

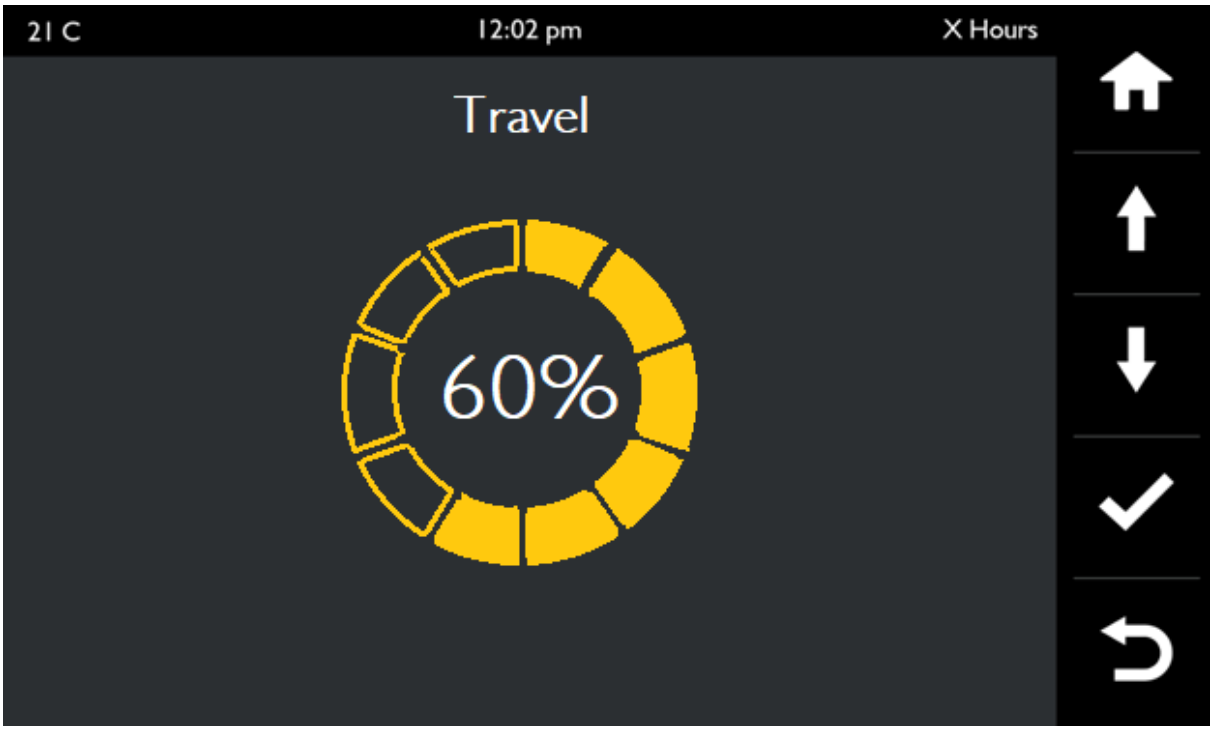

5. Use the tick around to confirm

© 2026 JCB INDIA LTD

3.28.6 Setting Travel Alarm

Setting Travel Alarm

System Level Function 40 > Display Functions 119 > Setting Travel Alarm

1. Go to machine settings in the display

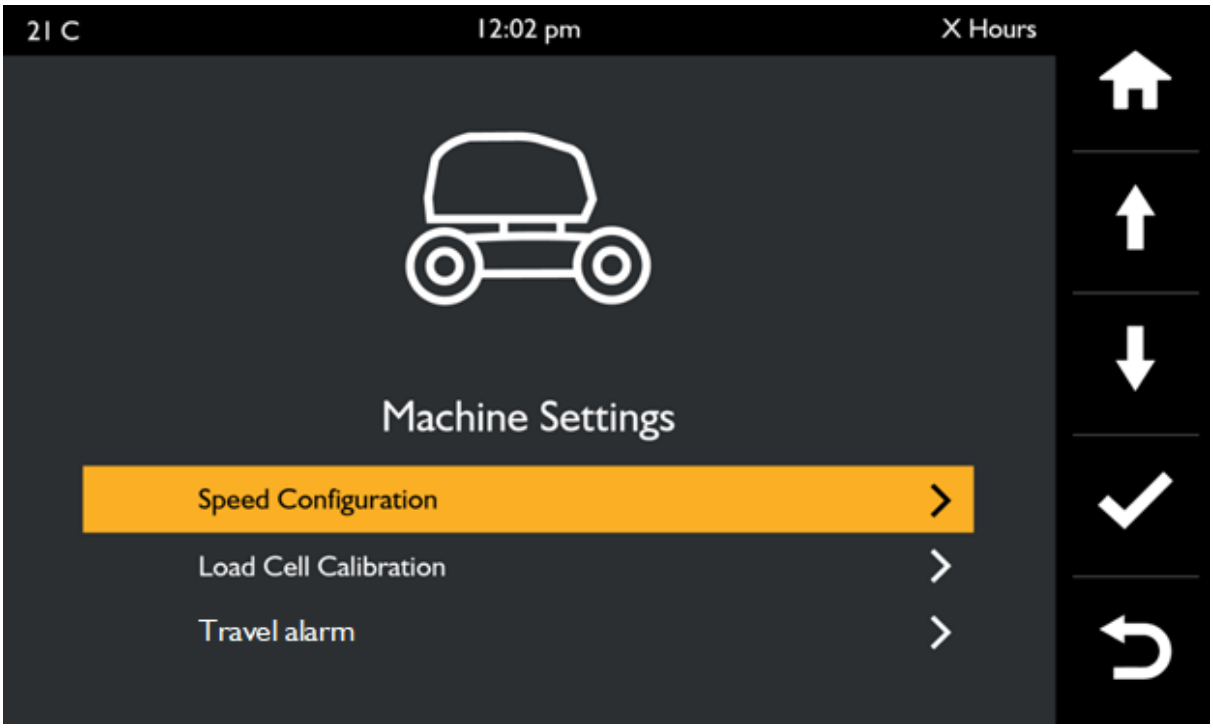

2. Using the arrow keys select travel alarm and use the tick button to confirm
3. The right hand side shows current status, to change use the tick button

© 2026 JCB INDIA LTD

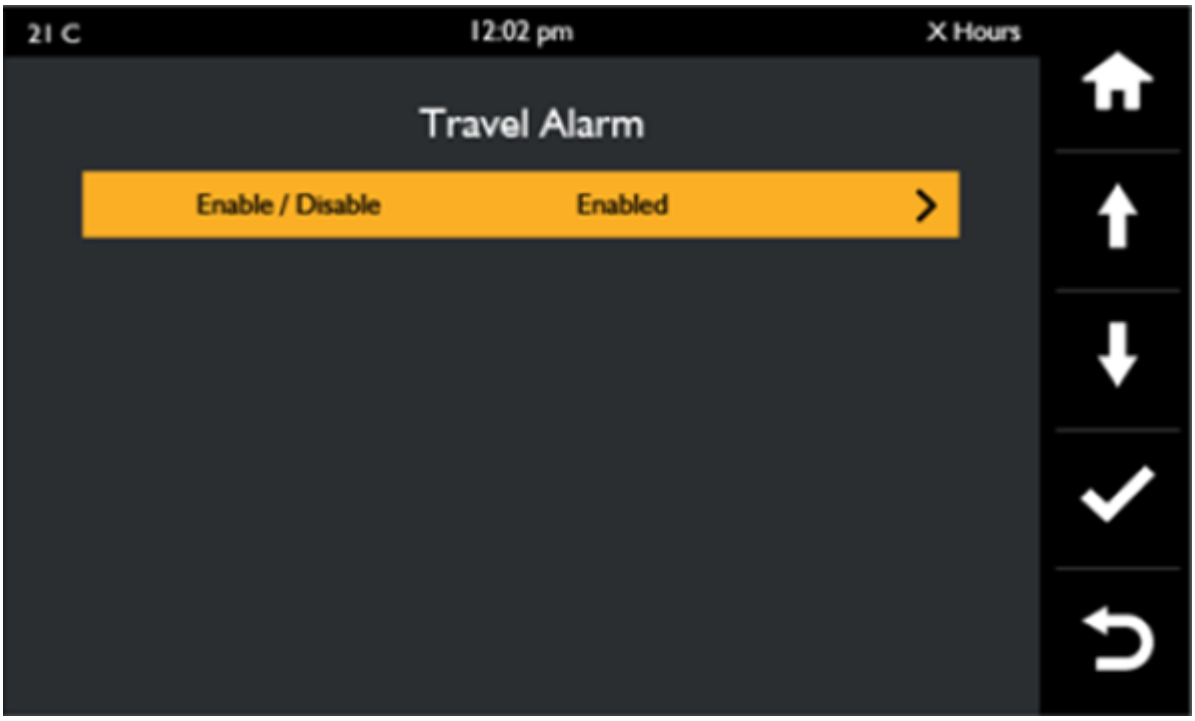

4. Use the arrows keys to select required state and tick to select

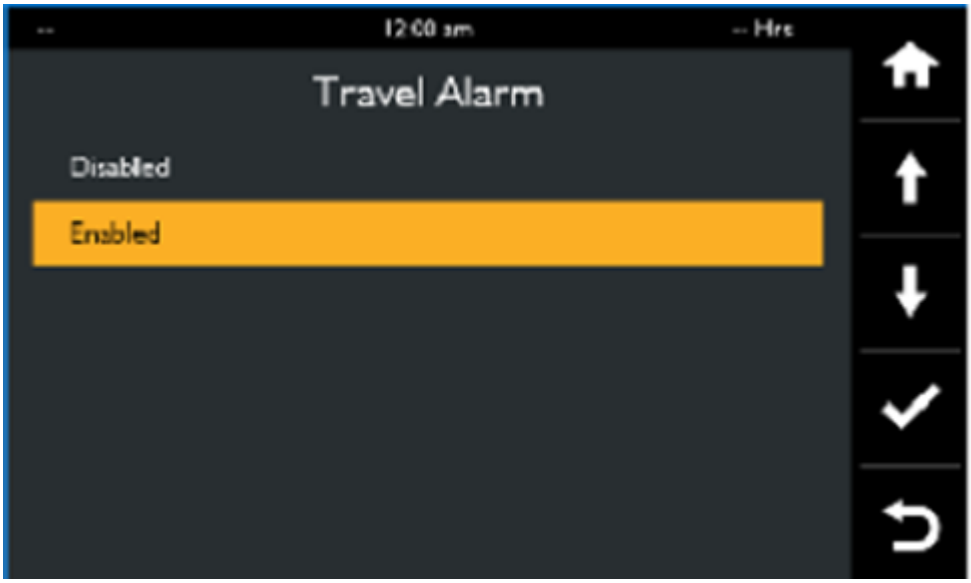

3.28.7 Setting Language



© 2026 JCB INDIA LTD

System Level Function 40 > Display Functions 119 > Setting Language

To Set the 'Language' in the display menu

1. Select Display settings
2. Select 'Language' using the arrows and tick button

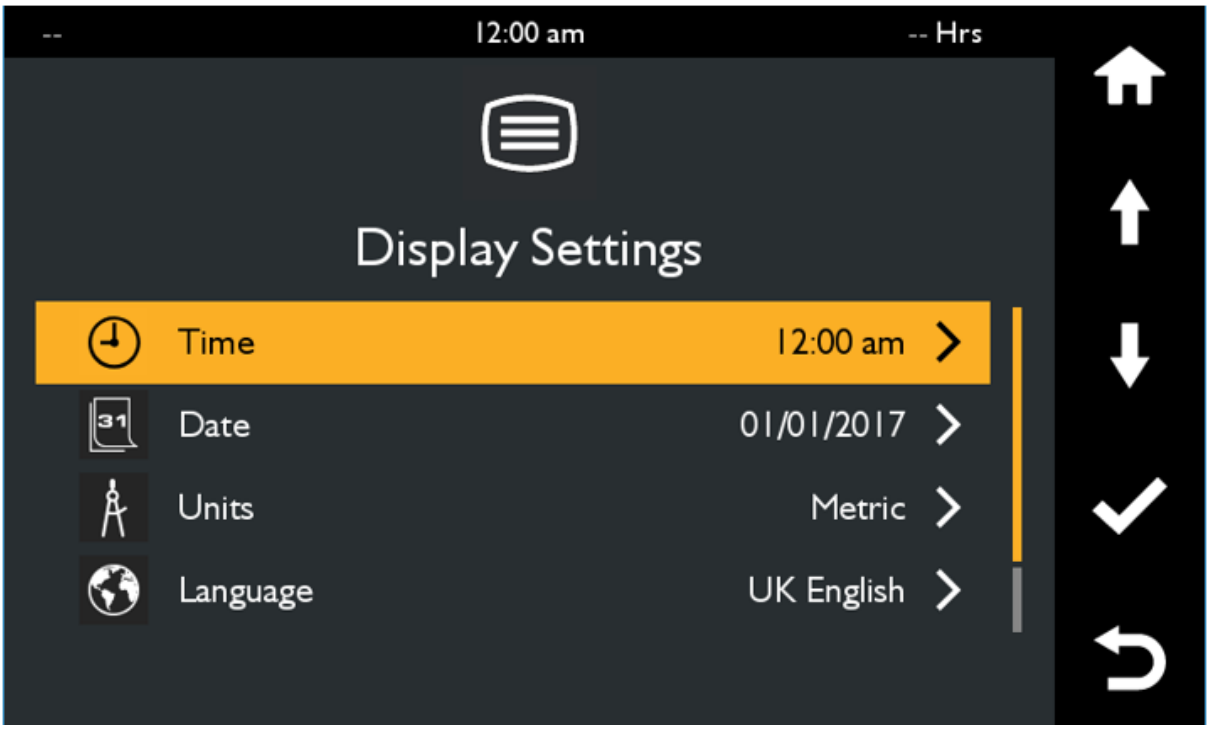

3. Using the arrow keys select the correct language from the drop down menu

© 2026 JCB INDIA LTD

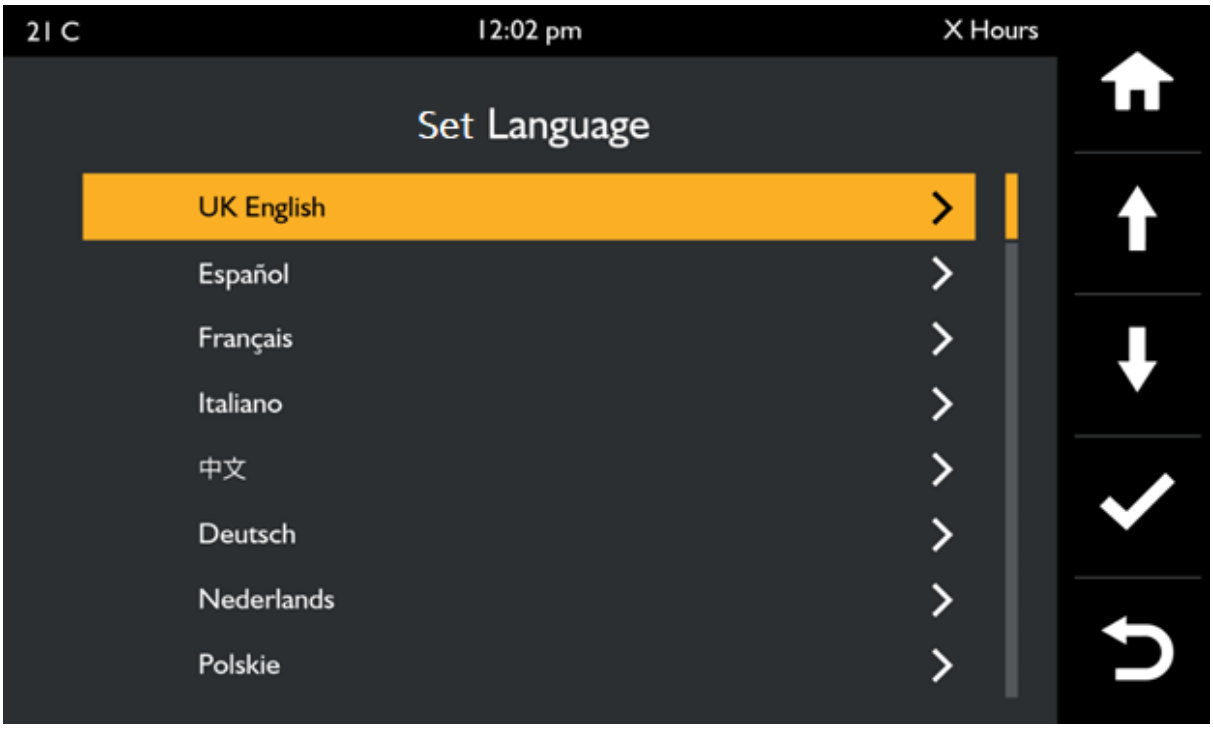

4. Use the tick button to confirm language selection

3.28.8 Setting Load Cell Calibration

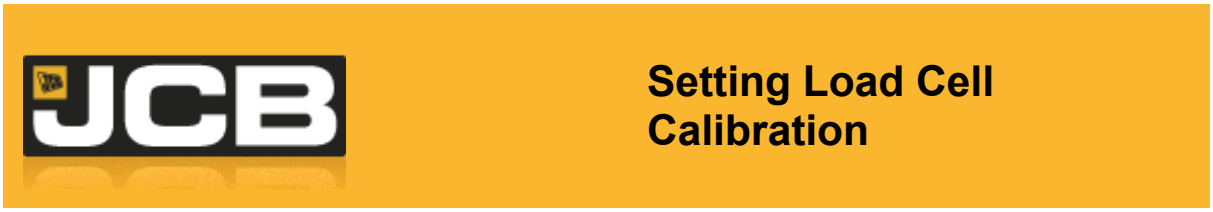

System Level Function 40 > Display Functions 119 > Setting Load Cell Calibration

Load cell Calibration

1. Select 'machine settings on the display screen
2. Select load cell calibration and use the tick to confirm

© 2026 JCB INDIA LTD

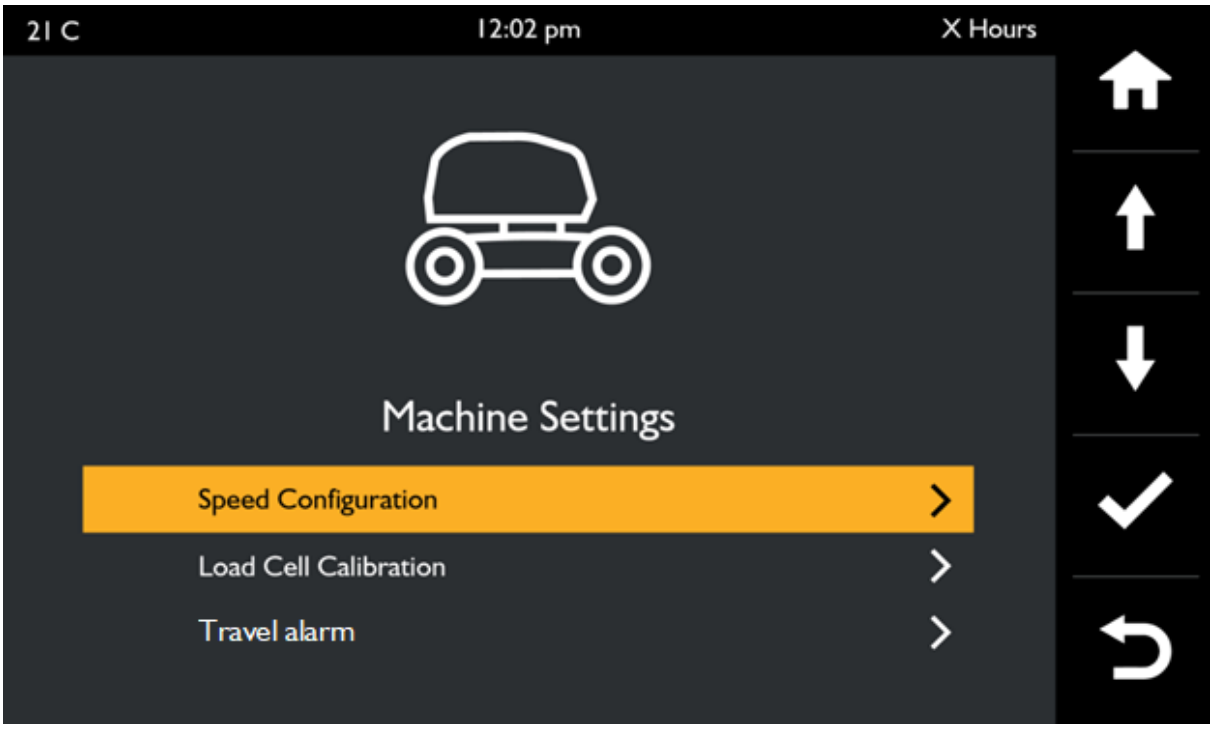

3. Use the arrow keys and select the 'NO load' or 'Rated load' depending on the calibration to be carried out.

Ensure their is nothing in the platform when the 'NO load' is selected

Ensure 250Kg is in the platform to set the 'rated load'

4. When the machine has the correct loading, use the tick arrow to confirm setting.

© 2026 JCB INDIA LTD

This page is intentionally left blank.
Remove this text from the manual
template if you want it completely blank.

Components

4 Components



Components

List of Components 134

Sr No.	Component
1	PF01 Electric Pump 136
2	PF02 Control System primary 139
3	PF03 Grid Heater 142
4	Water in Fuel Sensor (WIF) 145
5	Fuel Pump 149
6	Fuel Level Sensor 153
7	Air Filter Vacuum Switch 157
8	Grid Heater 160
9	Grid Heater Relay 163
10	Main Boom Lower Limit Switch 166
11	Main Boom Telescope Retract Limit Switch 172
12	Articulated Boom Lower Limit Switch 176
13	Slew Position Limit Switch 180
14	Alternator Resistor 185
15	Engine POD Box 189
16	Work Light (Optional Kit) 193
17	Batteries 198
18	White Noise Alarm 205
19	Beacon 208
20	Isolator 212
21	Kohler Engine ECU 215
22	Horn 218
23	Axle Lock Pressure Sensor 223
24	Platform & Jib Valve Block 228
25	Weight Sensor 232
26	DC Contactor 238
27	Tilt Sensor 242
28	Slew Limit Switch 246

© 2026 JCB INDIA LTD

29	Main Valve Block 249
30	Brake Valve Block 262
31	Electric Pump 268
32	Hydraulic Generator 271
33	AC Connector 276
34	Diagnostic Connector 279
35	Customer Telematics 284
36	Livelink ECU 288
37	Base Bosch ECU 292
38	Transmission Pump 304
39	Platform & Control Panel 312
40	Turntable Control Panel 436



© 2026 JCB INDIA LTD

4.1 PF01 Electric Pump



Components 134 > PF01 Electric Pump

Component :	Fuse Electric Pump
Function:	The primary function of fuse is to keep the high voltage supply away from electric pump. It will brake the circuit in case of too much current flow & any fault in component.

© 2026 JCB INDIA LTD

Location:

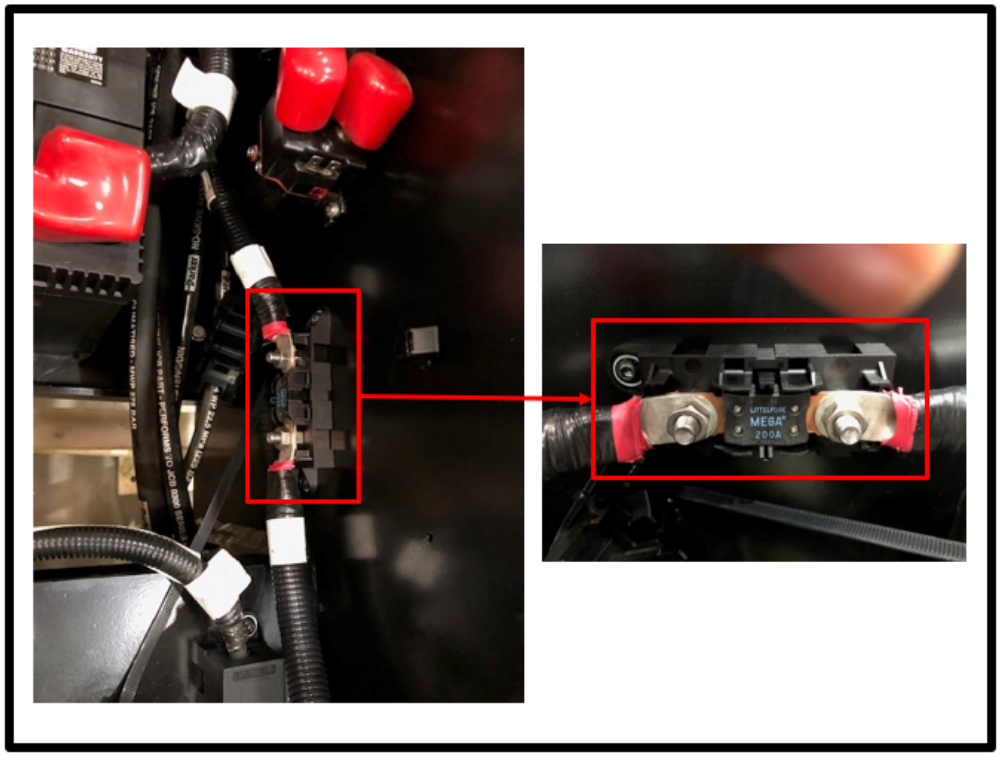

Location

Inside the Chassis RHS, near battery.

Image:

Signal:

Pin	Battery Cable Connected to
+VE	Red
-VE	Black

Wires & Connectors :

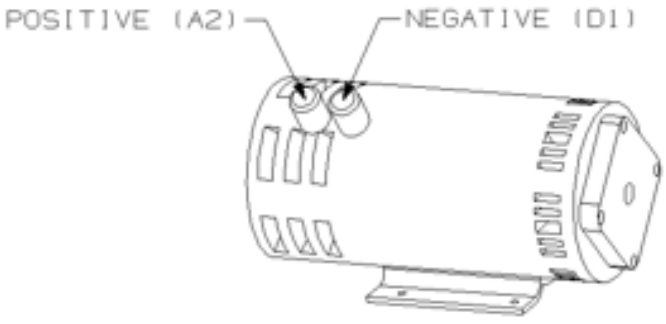

© 2026 JCB INDIA LTD

Internal

Electrical

Schematic:

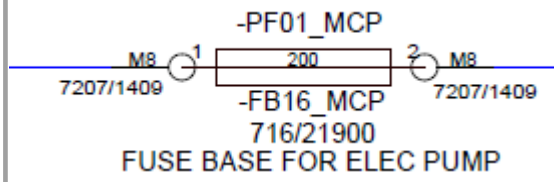

Testing:

Important: Use the multi-meter on the harness connector pins. DO NOT USE the meter on the ECU pins.

1.There is a 3.3KW DC motor fitted inside turntable.

2.Check the terminal properly connected at motor . Red (positive) cable should be connected at A2 & Black (negative) cable should be connected at B1

3.Visually inspect the motor winding, bushes & commutator

4.Check the voltage at DC contactor power contacts. This should read 12V

5.If there is no 12V then check DC contactor coil supply & investigate wiring as schematic

6.If there is 12V supply then there may be internal damage to motor , replace it.

Expected Values:

12V

Related Fault

Fault Code	Description
B1055-17 602	AUX / Overload override button pressed condition - Circuit short to high (10v)
B1056-16 603	AUX / Overload override button pressed condition - Circuit short to low

© 2026 JCB INDIA LTD

Codes:	B1694 -17 911	AUX / Overload override button unpressed condition - Circuit short to high (10v)
	B1695 -16 912	AUX / Overload override button unpressed condition - Circuit short to low
	B1696 -13 913	AUX / Overload override button both conditions - Signal plausibility failure (Circuit open)
	B1697 -92 914	AUX / Overload override button both conditions - Signal plausibility failure (10v)

4.2 PF02 Control System Primary

PF02 Fuse Control System Primary

Components 134 > PF02 Control System Primary

Component :	Fuse Control System Primary
Function:	Control system primary fuse is used for protection to control panel. This Fuse is the main control system primary fuse
Location:	On Chassis

© 2026 JCB INDIA LTD

Location Image:

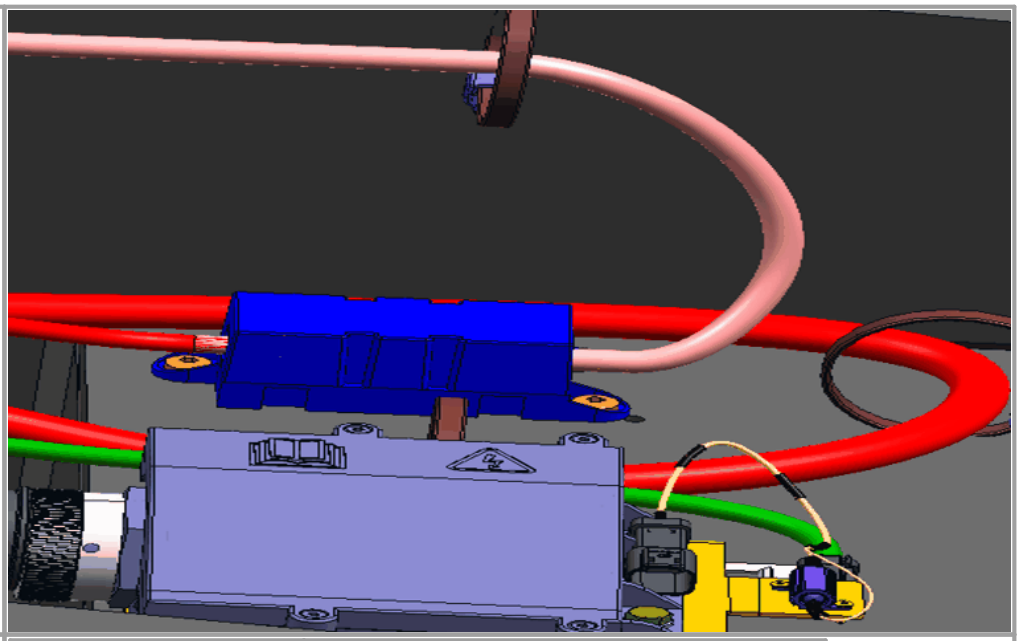

Signal:

Pin Number	Description
Positive	16sqmm cable
Positive	16sqmm cable

Wires & Connectors :

Shows the machine harness Side

© 2026 JCB INDIA LTD

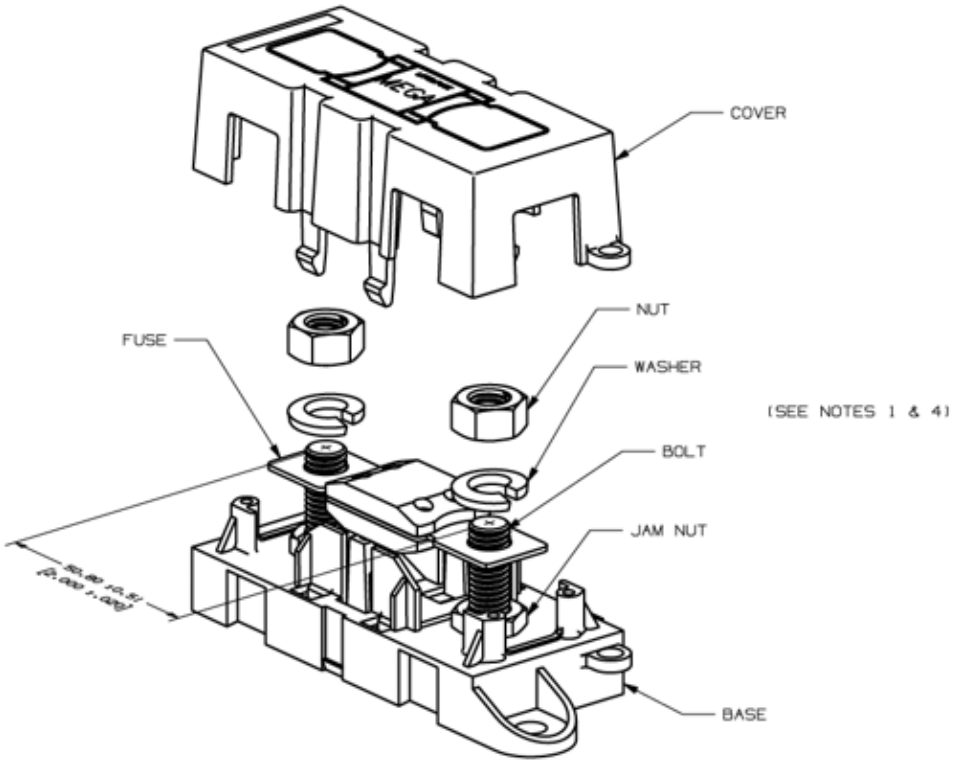

Item	Torque Value
Fuse holder bolt tightened with chassis	5 Nm
Fuse bolt tightened with fuse holder bolt	8-14 Nm

Internal

Electrical

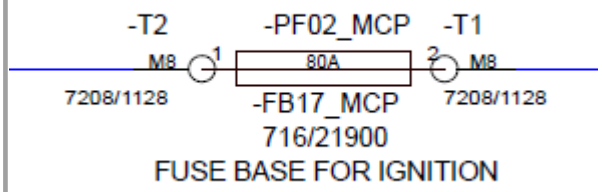

Schematic:

© 2026 JCB INDIA LTD

Testing:	Important: Use the multi-meter on the harness connector pins. DO NOT use the meter on the ECU pins 1.Using a multimeter, check the continuity between the two pins on the Fuse. value should be 0 Ω 2.If there is no continuity then replace the Fuse
Expected Values:	24V
Related Fault Codes:	N/A

4.3 PF03 Grid Heater



Components 134 > PF03 Grid Heater

© 2026 JCB INDIA LTD

Component :	Fuse Grid Heater
Function:	Grid heater fuse is used to protect the Grid heater..
Location:	On Engine Tray
Location Image:	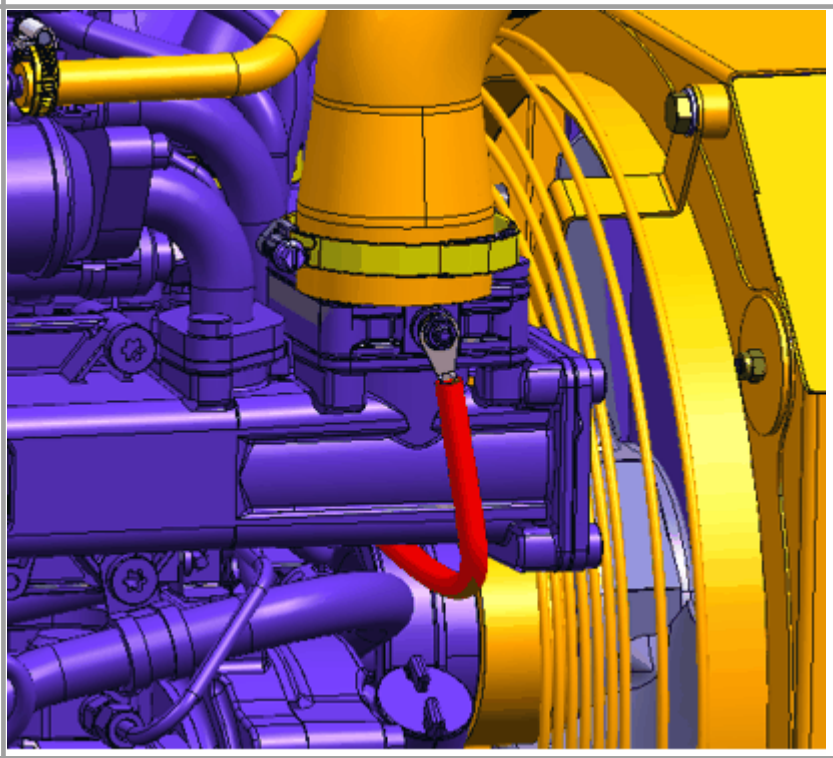
Signal:	Pin Number / Description Positive / 16sqmm cable Positive / 16sqmm cable

© 2026 JCB INDIA LTD

Wires & Connectors :	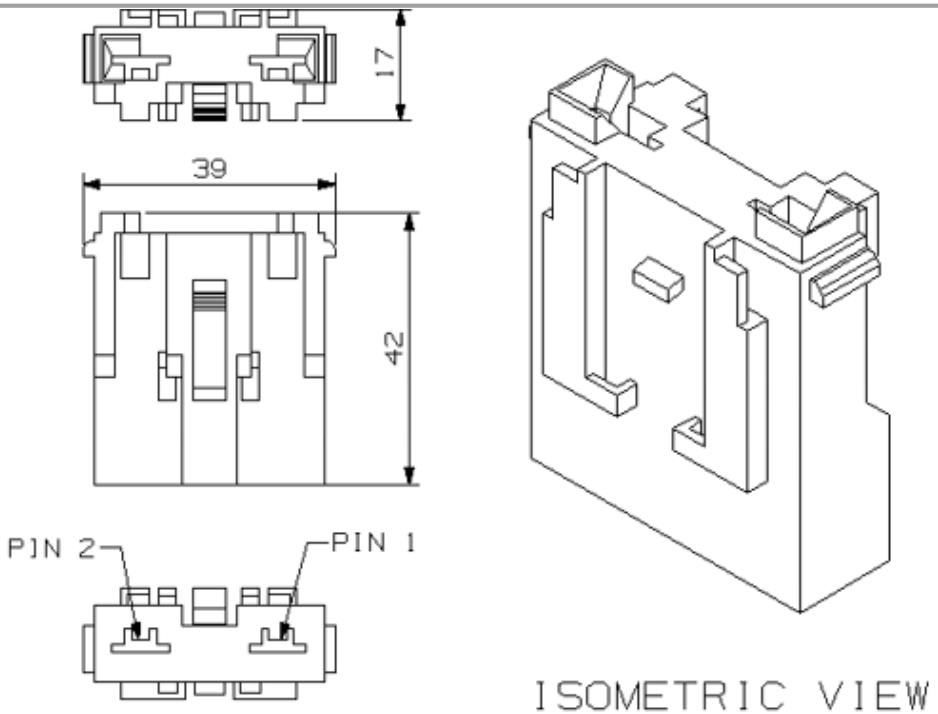
Internal Electrical Schematic:	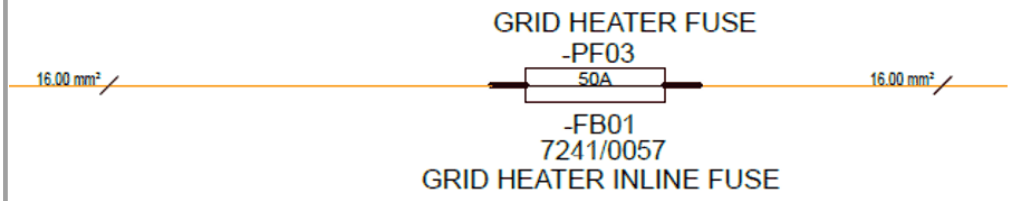
Testing:	Important: Use the multi-meter on the harness connector pins. DO NOT use the meter on the ECU pins 1.Using a multimeter, check the continuity between the two pins on the Fuse.value should be 0 Ω 2.If there is no continuity then replace the Fuse

© 2026 JCB INDIA LTD

Expected Values:	12V
Related Fault Codes:	N/A

4.4 Water In Fuel Sensor (WIF)



Components 134 > Water In Fuel Sensor (WIF)

Component :	Water In Fuel Sensor (WIF)
Function:	•The water in fuel sensor is to ensure the quality of fuel is sufficient for the kohler engine.

© 2026 JCB INDIA LTD

	•The bowl may require draining when the sensor is triggered .It also detects the water content in the fuel before it goes to the fuel rail.
Location:	On Engine Tray
Location Image:	
Signal:	

Pin Number	Description	Wire Number
A	Ignition	1039
B	Signal	4039
C	GND	6039

© 2026 JCB INDIA LTD

Wires & Connectors :	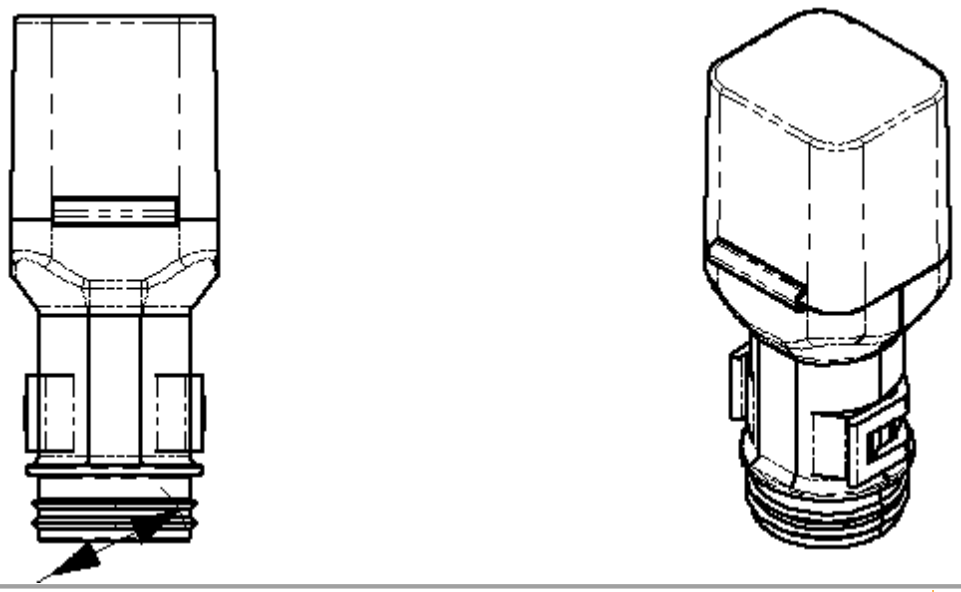
Internal Electrical Schematic:	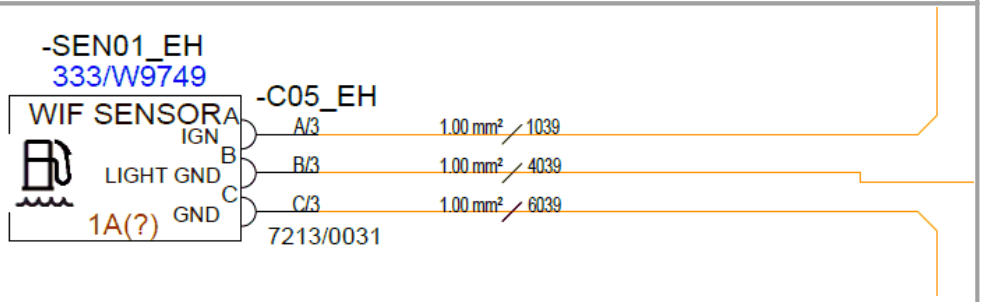
Testing:	Important: Use the multi-meter on the harness connector pins. DO NOT use the meter on the ECU pins. Note- There should be beep if water in fuel If water is detected in the fuel water separator filters while the engine is running or with the ignition in the on run position the water in fuel indicator light will illuminate - Check bowl for water and empty. If if empty and cant see now water in fuel then check wiring

© 2026 JCB INDIA LTD

	as follows : 1. Sensor supply voltage fault-Check the presence of electrical supply on water sensor .If sensor supply voltage is OK, proceed to Step 2 2. Sensor connection faulty-Check condition of sensor to harness connection, make sure the seals are in place.Check for signs of corrosion or Contamination.Repair/replace as necessary.If no fault is found, proceed to Step 3. 3. Sensor failure-Remove the water sensor to fuel filter. Move the water sensor float to full stroke and control with a multimeter if the internal sensor switch works correctly.Change the switch if is needed. If no fault is found, proceed to Step 4 4. Wiring fault-Check the harness continuity, and machine and earth contacts. Repair/replace as necessary.If no fault is found, proceed to Step 5 5. ECU fault-Disconnect the harness from the ECU and inspect.Check seals are in place, check for signs of corrosion and pin damage. If harness is damaged repair/replace as necessary. If ECU pins are damaged, replace ECU and Reflash, see section on ECU flashing.If no fault is found, raise a Kohler Help desk Call.Sensor supply voltage is OK, proceed to Step 2nd.

© 2026 JCB INDIA LTD

Expected Values:	12V
Related Fault Codes:	**Fault Code** / **Fault Description** B1282-13 839 — Water in fuel OC during engine startup: (Transition from GND to OC is expected within 2 secs of engine ignition ON) B1286-16 843 — Water in fuel Short to Ground

4.5 Fuel Pump

Fuel Pump

Components 134 > Fuel Pump

Component:	Fuel Pump
Function:	•Fuel lift pumps function is to raise the level of fuel up through the system into the fuel injection system.

© 2026 JCB INDIA LTD

	•Fuel Pump draws the fuel from the fuel tank through fuel lines and delivers it through a fuel to either a carburetor of fuel injector and finally to the cylinder chamber for combustion.
Location:	The fuel pump is located in the engine tray
Location Image:	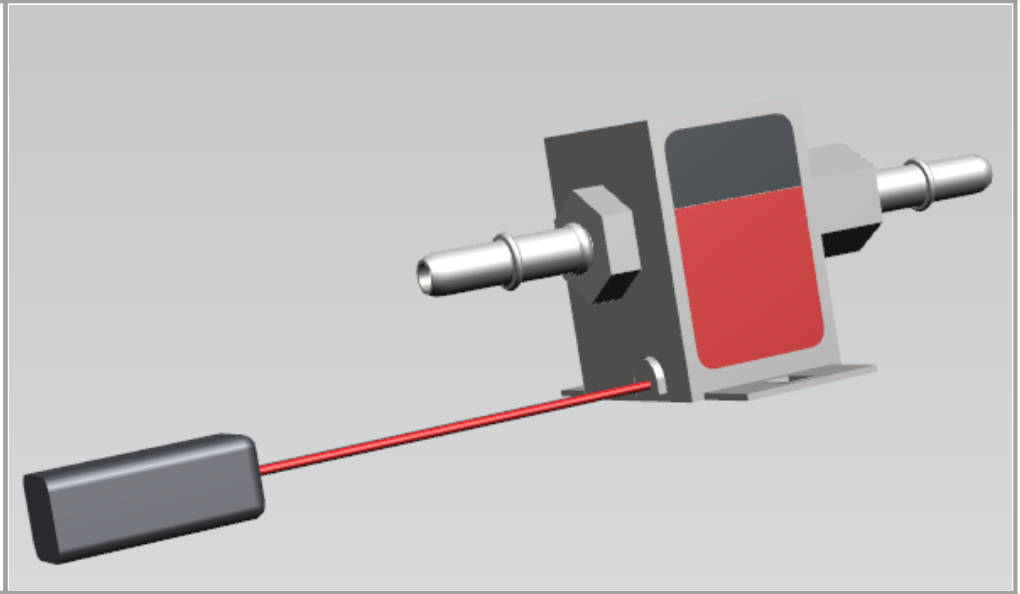

Signal:

Pin Number	Description	Wire Number
1	12V Feed	4002
2	GND	6002

© 2026 JCB INDIA LTD

Wires & Connectors :	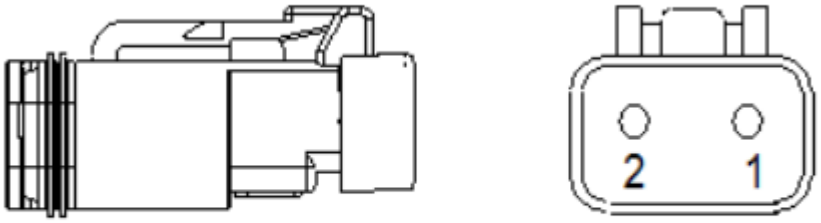 7212/0052 Side and Face View
Internal Electrical Schematic:	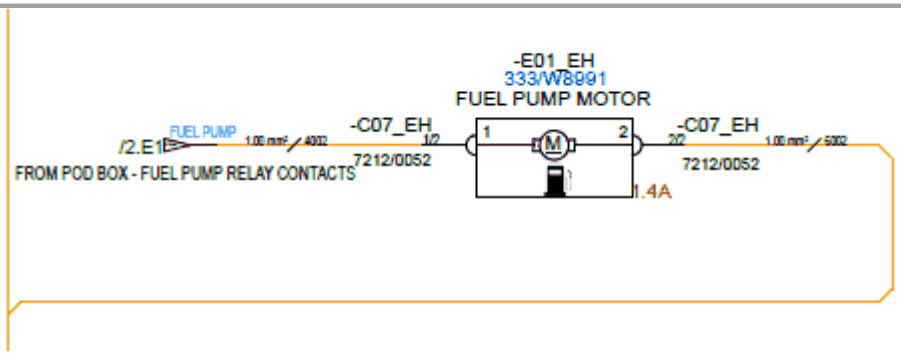
Testing:	Important: Use the multi-meter on the harness connector pins. DO NOT USE the meter on the ECU pins 1. Turn the ignition switch to on & Check priming sound for 20 second 2. If the priming sound is coming, Pump is OK 3. If the priming sound is not coming 4 Remove connector use test meter & check 12V supply is coming to pin 1 & wire no 4002

© 2026 JCB INDIA LTD

3.if 12V supply is not there check wiring & fuse F3 10A is OK

4. Replace fuse if fuse is faulty & recheck the 12V supply

5. Check for faulty fuel pump

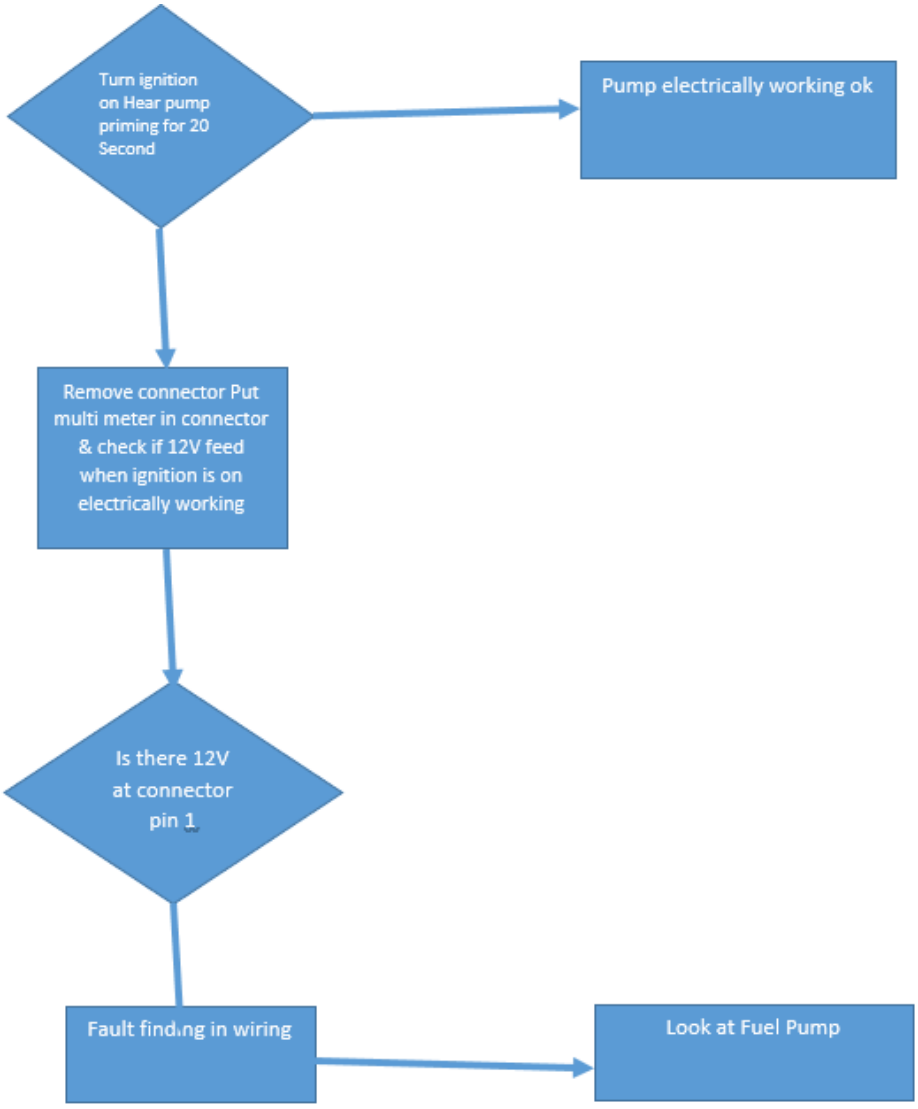

© 2026 JCB INDIA LTD

Expected Values:	12V
Related Fault Codes:	Please Refer Kohler Helpfile

4.6 Fuel Level Sensor



Fuel Level Sensor

Components 134 > FuelLevelSensor

Component:	Fuel Level Sensor
Function:	• The fuel sensor senses the fuel in the tank and warns operator when the fuel level is low. • Fuel level sender input shall be 0V (GND) with pull-up and variable resistance. Connected to the base ECU clean ground. • There should be an out-of-range error for following conditions >175? or <10?

© 2026 JCB INDIA LTD

Location:	On Fuel Tank

© 2026 JCB INDIA LTD

Location **Image:**	 

© 2026 JCB INDIA LTD

Signal:

Pin	Description	Connector Number	Wire Number	Signal
1	12V input	C28_TH	4033	Resistance to GND based on the level of fuel
2	GND	C28_TH	6033	

Wires & Connectors:

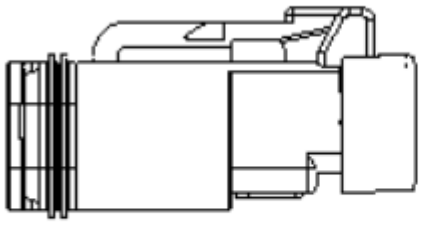

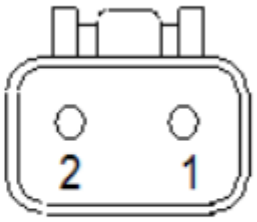

7212/0052 Side and Face View

Internal Electrical Schematic:

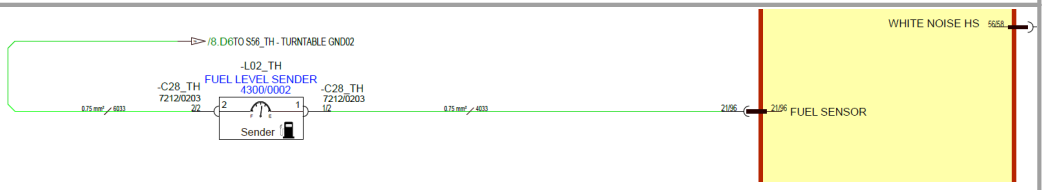

Testing:

1. Turn the ignition ON.
3. Keep the Fuel level between 25% to 10%
4. verify the Fuel sensor led on display

© 2026 JCB INDIA LTD

Expected Values:	Fuel sensor Led :- On Fuel sensor Voltage :- 3.3V
Related Fault Codes:	

Fault Code	Fault Description
B1232-17 783	Fuel level - Signal above allowable range
B1233-16 784	Fuel level - Signal below allowable range
B1287-2F 844	Fuel level - Erratic signal

4.7 Air Filter Vacuum Switch



Components 134 > Air Filter Vacuum Switch

Component:	Air Filter Vacuum Switch
Function:	The vacuum switch is on the air filter to detect for blockages and poor flow of air and warn the operator

© 2026 JCB INDIA LTD

Location:	On Air Filter Body
Location Image:	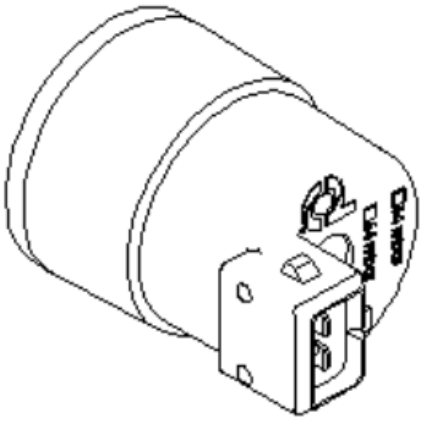 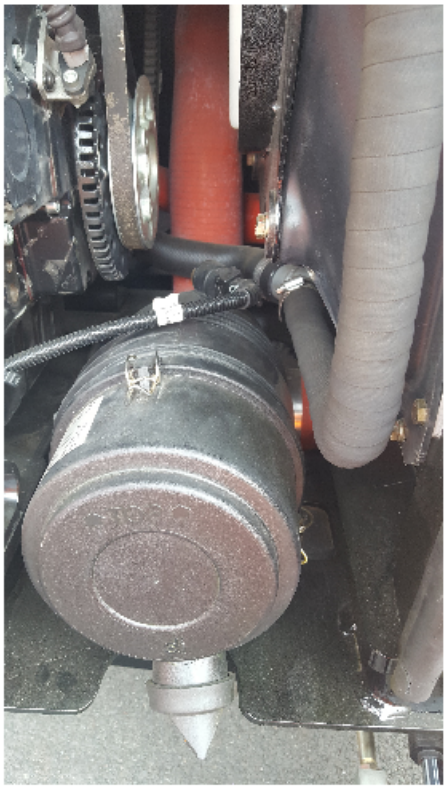
Wires & Connectors :	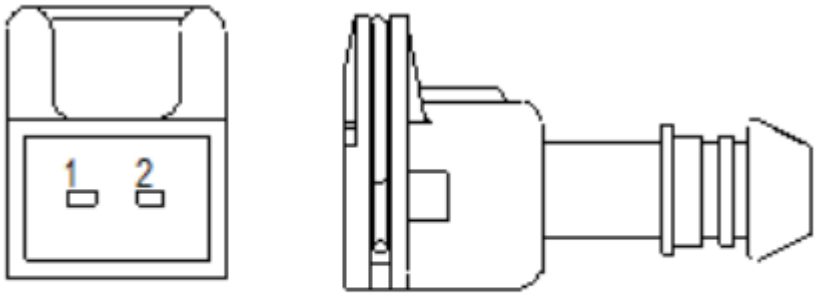 **7212/0013 Connector side and face view**

Signal:

Pin	Description	Connector Number	Wire Number	Signal
1	Switch output to ECU	C08_EH	4023	Switched GND
2	GND Feed input	C08_EH	6023	GND

© 2026 JCB INDIA LTD

Internal

Electrical

Schematic:

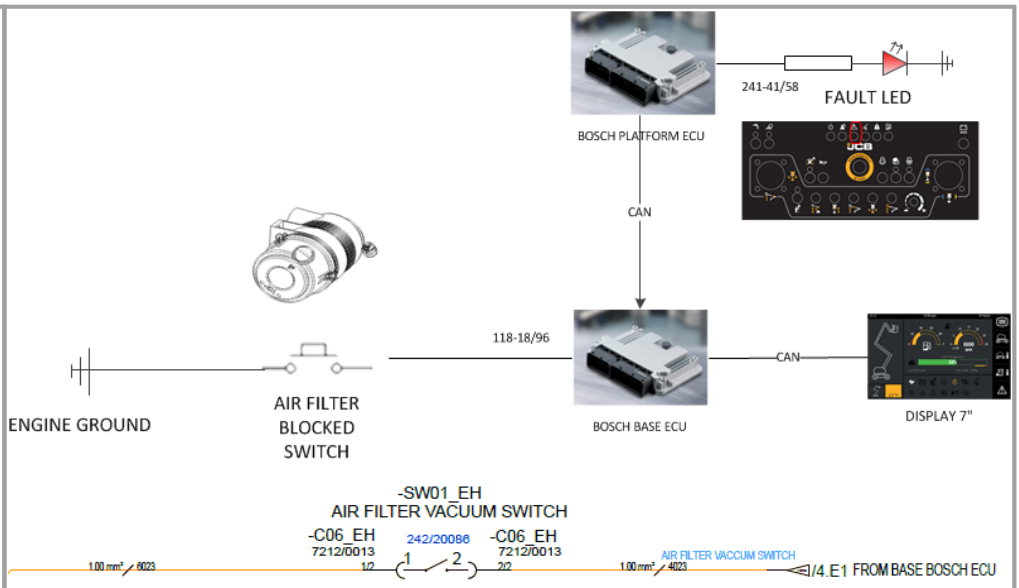

Testing:

Important: Use the multi-meter on the harness connector pins. DO NOT USE the meter on the ECU pins.

1. Turn on the ignition switch the ignition

2. See if the below symbol comes on base control display



3. Check the filter and ensure if its blocked or not

4. if the filter is not blocked but still have this icon there may be wiring issue or broken switch

5. Remove air filter restriction indicator switch

6. Turn on the ignition switch

7. Check continuity on pin 1connector C06 to ground,this will be Open circuit

© 2026 JCB INDIA LTD

	8. If air is blocked the switch will be closed circuit & pin 2 be ground Note-When the air filter is blocked the air filter vacuum switch will close
Expected Values:	12V
Related Fault Codes:	Please Refer Kohler Helpfile

4.8 Grid Heater



Components 134 > Grid Heater

Component :	Grid Heater

© 2026 JCB INDIA LTD

Function:	The grid heater will warm up the induction air to the engine when the ambient temperature is below
Location:	In Intake manifold, Engine
Location Image:	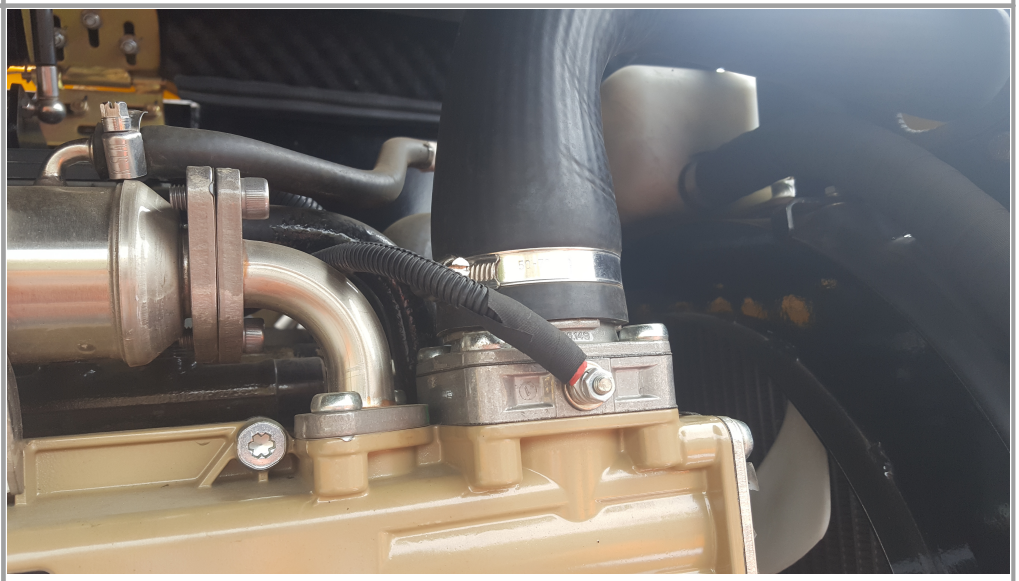
Signal:	The main feed will come from the grid heater relay
Wires & Connectors :	

© 2026 JCB INDIA LTD

Internal **Electrical** **Schematic:**	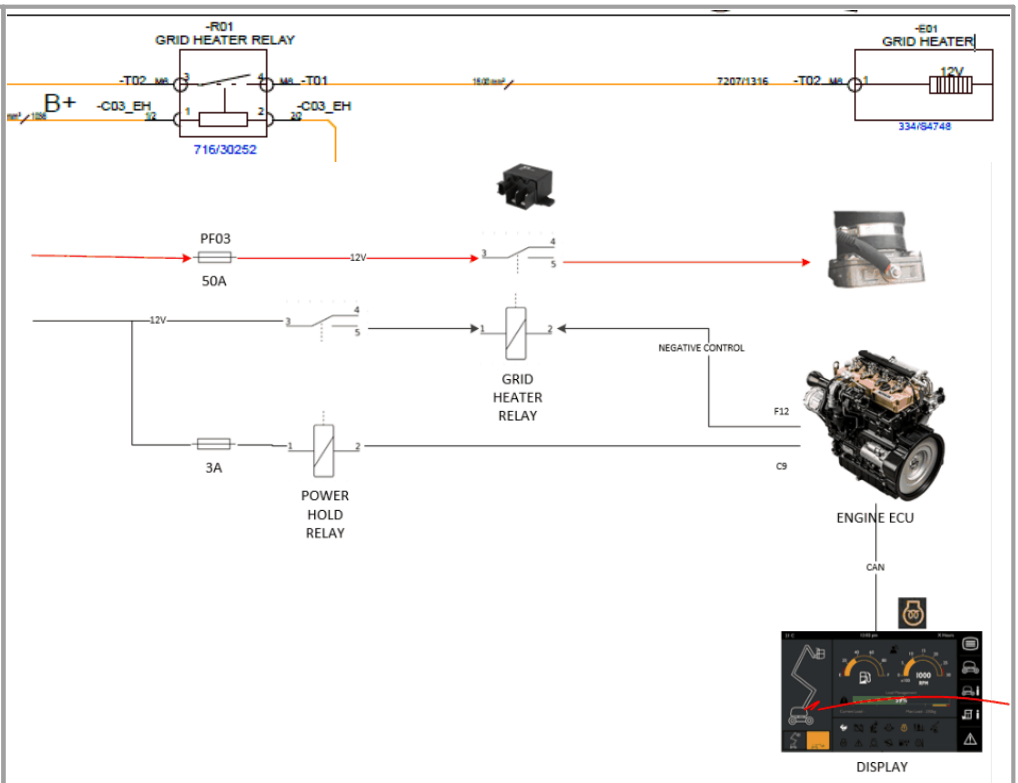
Testing:	Please refer Kohler Engine help file for Testing and Related Fault Codes
Expected **Values:**	12V
Related **Fault** **Codes:**	Please refer Kohler Engine help file

© 2026 JCB INDIA LTD

4.9 Grid Heater Relay



Components 134 > Grid Heater Relay

Component :	Grid heater Relay
Function:	Grid heater Relay is used for switching purpose or ON-OFF.
Location:	On Engine Tray

© 2026 JCB INDIA LTD

Location

Image:

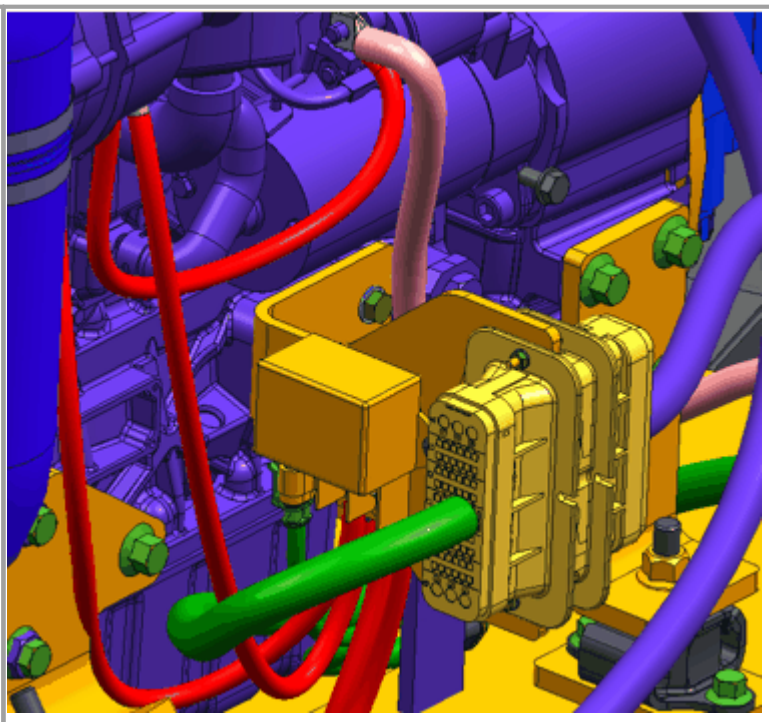

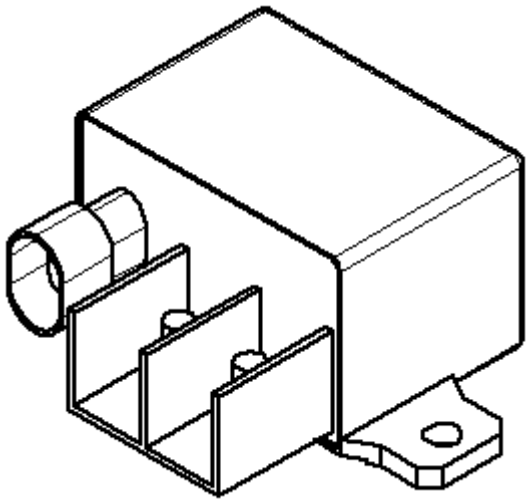

Signal:

Pin Number	Description	Wire number
1	Positive	1038
2	Negative	38
3	16sqmm	

© 2026 JCB INDIA LTD

	4	16sqmm	

Wires & Connectors :



Internal Electrical Schematic:

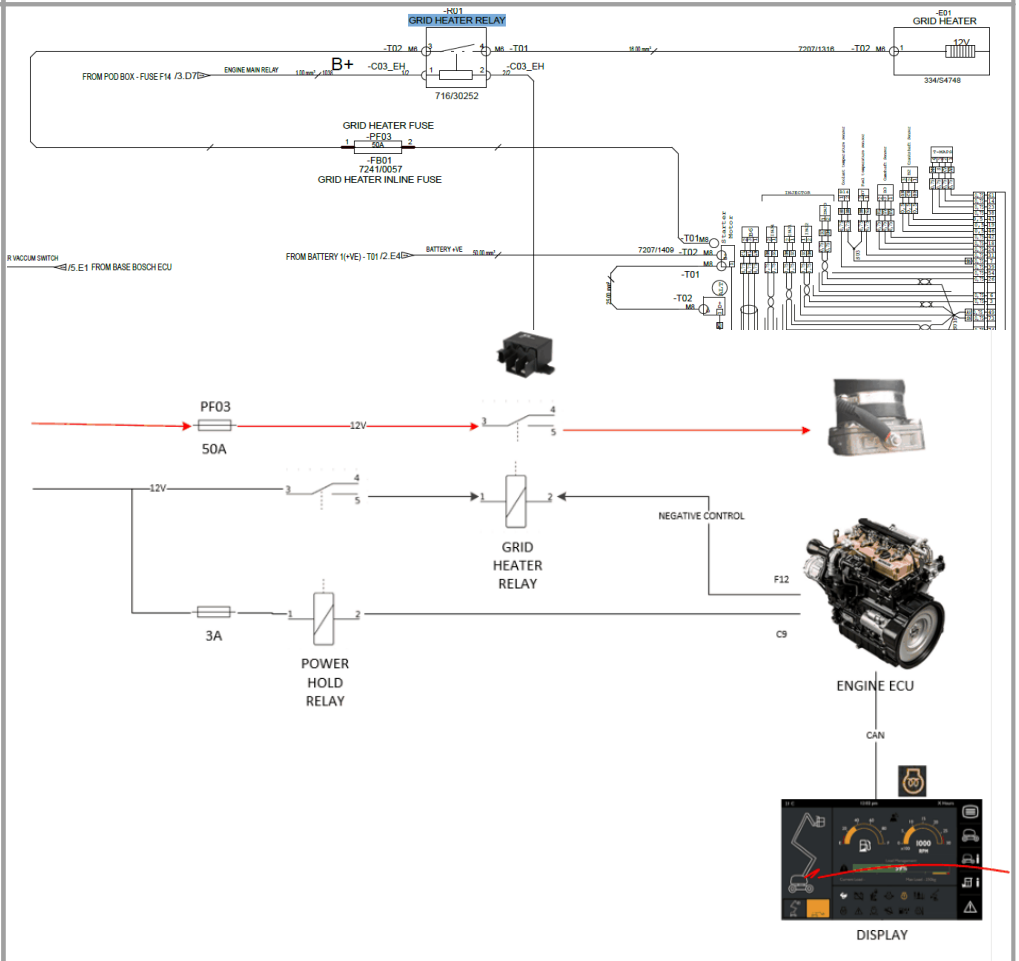

Testing:

Please refer Kohler Engine Help file

© 2026 JCB INDIA LTD

Expected Values:	12V
Related Fault Codes:	Please refer Kohler Engine help file

4.10 Main Boom Lower Limit switch



Components 134 > Main Boom Lower Limit switch

Component:	Main Boom Lower Limit switch
Function:	•The main boom lower limit switch is to detect when the telescopic main boom is fully retracted.

© 2026 JCB INDIA LTD

	•This is also part of the machine mode that indicates whether the machine is in the Stowed or Raised mode.
Location :	The switch is located on the side of the boom front knuckle cover plate

© 2026 JCB INDIA LTD

Location **Image:**	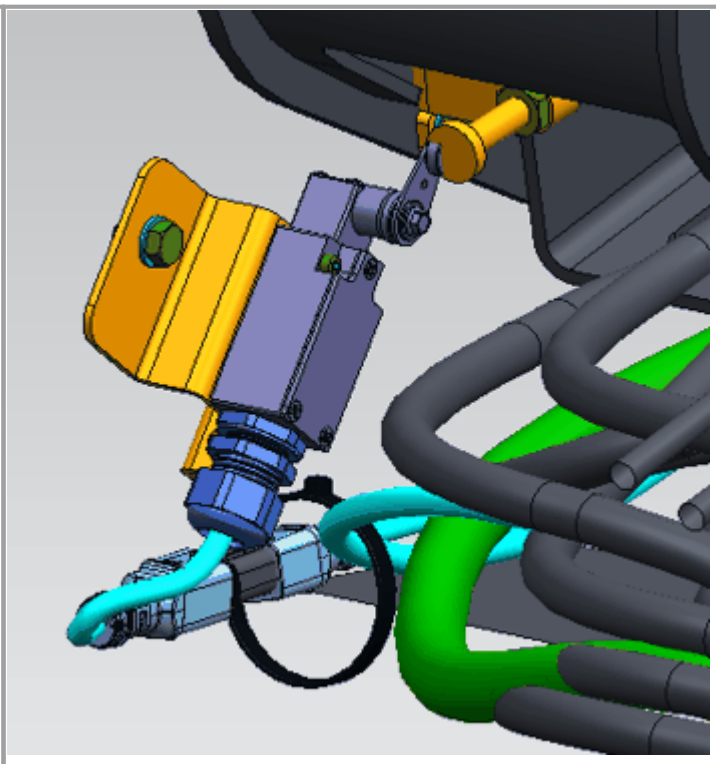

© 2026 JCB INDIA LTD

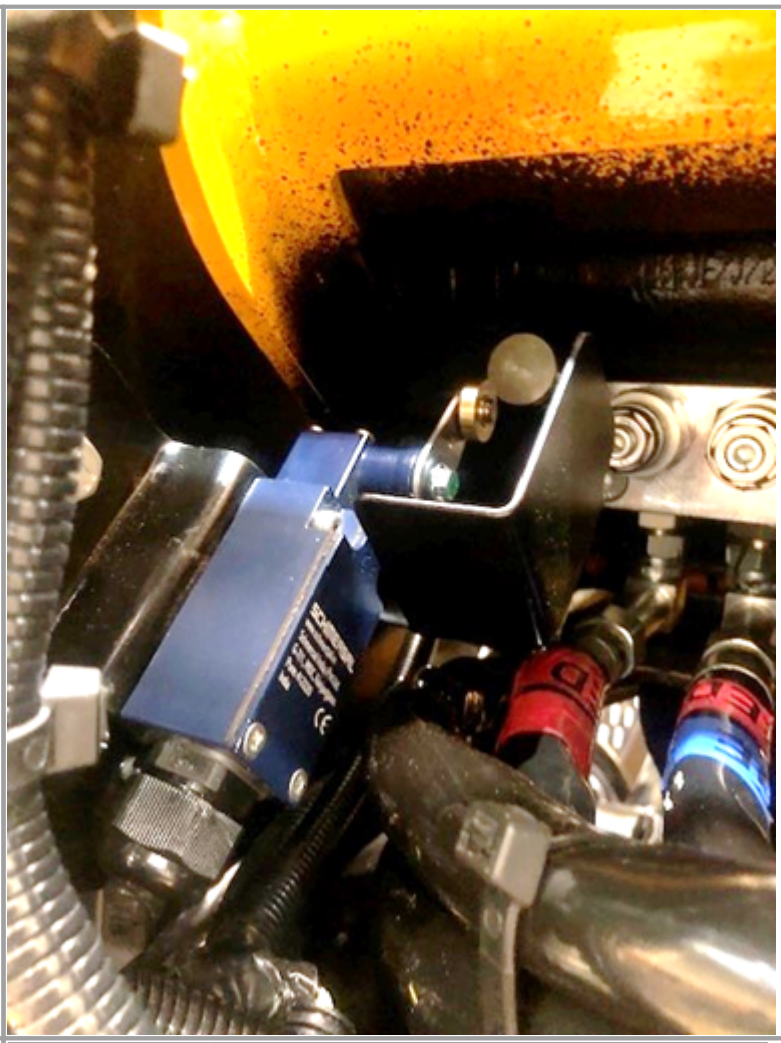

Signal:

Pin Number	Description	Wire Number
13 (1)	10V Feed	1046EA
14 (2)	Switch Signal 1	4013
21 (3)	10V Feed	1046EB
22 (4)	Switch Signal 2	4015

© 2026 JCB INDIA LTD

Wires & Connectors:	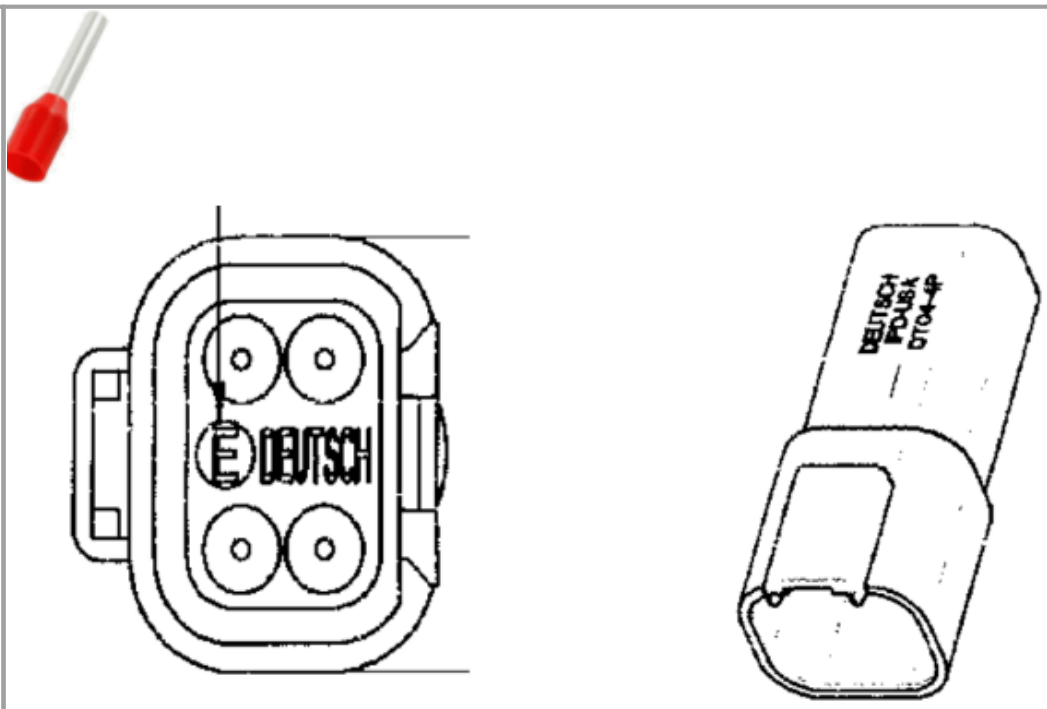
Internal Electrical Schematic:	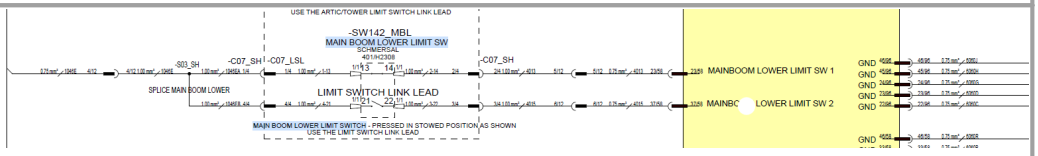
Testing:	Important: Use the multi-meter on the harness connector pins. DO NOT USE the meter on the ECU pins.

© 2026 JCB INDIA LTD

1. Check the gland nut tightened properly there should be no water ingress

2. Check the switch position pressed or undressed.

3. It should be un-pressed In natural state

4. Check the continuity between pin 13 and 14 it should be open circuit

5. Check the continuity between pin 21 and 22 it should be close circuit

6. When switch is pressed then Pin 13 & 14 should be closed circuit and 21 & 22 should be open circuit

7. Switch position is at 0 degree when is not pressed



8. Switches changes at 30 degrees going from center and 12 degrees on the way back towards center

© 2026 JCB INDIA LTD

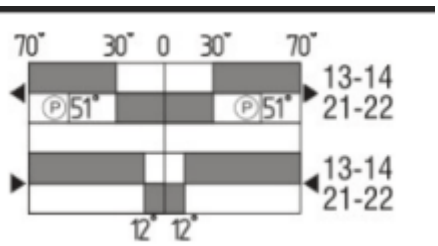

Expected Values: 12V

Related Fault Codes:

Fault Code	Fault Description
B1126-17 682	Main boom position switch 1 - Circuit short to high (10v)
B1127-17 683	Main boom position switch 2 - Circuit short to high (10v)
B1128-16 684	Main boom position switch 1 - Circuit short to low
B1129-13 685	Main boom position switch - Signal plausibility failure (Circuit open)
B1130-16 687	Main boom position switch 2 - Circuit short to low
B1131-2F 689	Main boom position switch - Signal plausibility failure (10v)

4.11 Main Boom Telescope retract Limit switch

Main Boom Telescope retract Limit switch

Components 134 > Main Boom Telescope retract Limit switch

© 2026 JCB INDIA LTD

Component:	Main Boom Telescope retract Limit switch
Function:	•The main boom telescopic retract switch is to detect when the telescopic section of the main boom is fully retracted. •This is also part of the machine mode that indicates whether the machine is in the Stowed or Raised mode in conjunction.
Location:	The switch is located on the side of the boom under the cover
Location Image:	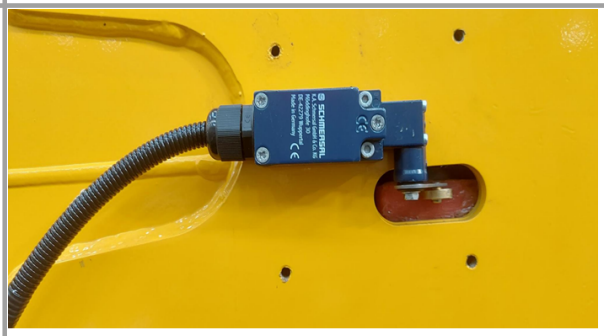 
Signal:	

Pin Number	Description	Wire Number
13 (1)	10V Feed	1046BA
14 (2)	Switch Signal 1	4105

© 2026 JCB INDIA LTD

	21 (3)	10V Feed	1046BB
	22 (4)	Switch Signal 2	4106

Wires &

Connectors:



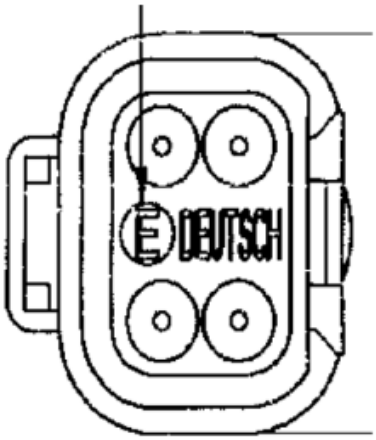

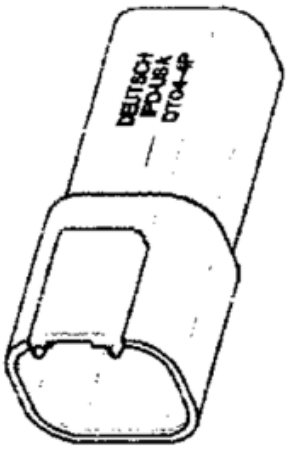

Internal

Electrical

Schematic:

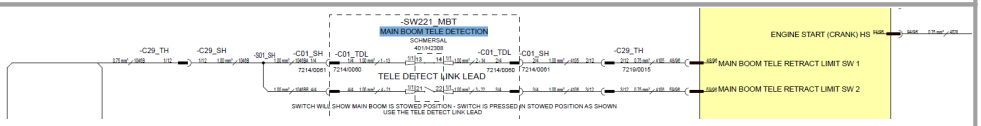

Testing:

Important: Use the multi-meter on the harness connector pins. DO NOT USE the meter on the ECU pins.

1. Check the gland nut tightened properly there should be no water ingress

© 2026 JCB INDIA LTD

2. Check the switch position pressed or undressed.

3. It should be un-pressed In natural state

4. Check the continuity between pin 13 and 14 it should be open circuit

5. Check the continuity between pin 21 and 22 it should be close circuit

6. When switch is pressed then Pin 13 & 14 should be closed circuit and 21 & 22 should be open circuit

7. Switch position is at 0 degree when is not pressed



8. Switches changes at 30 degrees going from center and 12 degrees on the way back towards center

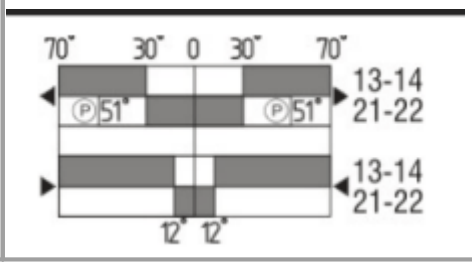

© 2026 JCB INDIA LTD

Expected Values:	12V
Related Fault Codes:	

Fault Code	Fault Description
B1138-17 695	Main boom telescopic retract limit switch 1 short circuit to high
B1139-17 696	Main boom telescopic retract limit switch 2 short circuit to high
B1140-16 697	Main boom telescopic retract limit switch 1 short circuit to low
B1141-13 698	Main boom telescopic retract limit switch 1 and 2 are both open circuit
B1142-16 699	Main boom telescopic retract limit switch 2 short circuit to Low
B1143-92 701	Main boom telescopic retract limit switch 1 and 2 Short to 10V

4.12 Articulated Boom Lower Limit Switch



Components 134 > Articulated Boom Lower Limit Switch

Component:	Articulated Boom Lower Limit Switch

© 2026 JCB INDIA LTD

<table>
<tr><td>Function :</td><td>•Articulated boom limit switch is to detect when the arctic boom sections fully lowered
•This is also part of the machine mode that indicates whether the machine is in the Stowed or Raised mode.</td></tr>
<tr><td>Location :</td><td>The switch is located on the side of the boom under the cover</td></tr>
<tr><td>Location Image:</td><td>  </td></tr>
<tr><td>Signal:</td><td>
<table>
<tr><th>Pin Number</th><th>Description</th><th>Wire Number</th></tr>
<tr><td>13 (1)</td><td>10V Feed</td><td>1046CA</td></tr>
<tr><td>14 (2)</td><td>Switch Signal 1</td><td>4009</td></tr>
</table>
</td></tr>
</table>

© 2026 JCB INDIA LTD

	21 (3)	10V Feed	1046CB
	22 (4)	Switch Signal 2	4011

Wires & Connectors:



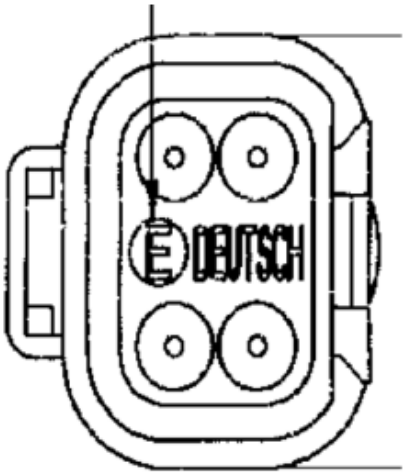

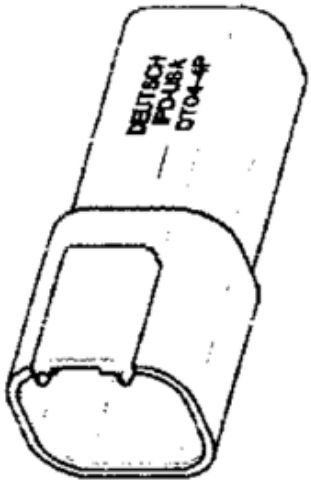

Internal Electrical Schematic:

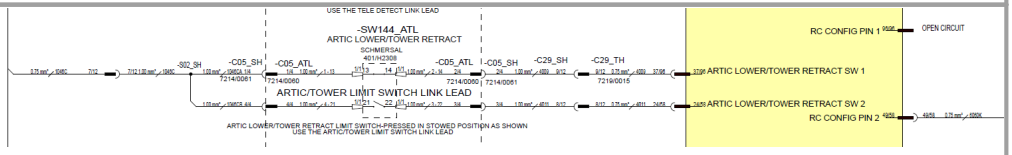

© 2026 JCB INDIA LTD

Testing:	Important: Use the multi-meter on the harness connector pins. DO NOT USE the meter on the ECU pins. 1. Check the gland nut tightened properly there should be no water ingress 2. Check the switch position pressed or undressed. 3. It should be un-pressed In natural state 4. Check the continuity between pin 13 and 14 it should be open circuit 5. Check the continuity between pin 21 and 22 it should be close circuit 6. When switch is pressed then Pin 13 & 14 should be closed circuit and 21 & 22 should be open circuit 7. Switch position is at 0 degree when is not pressed  8. Switches changes at 30 degrees going from center and 12 degrees on the way back towards center

© 2026 JCB INDIA LTD

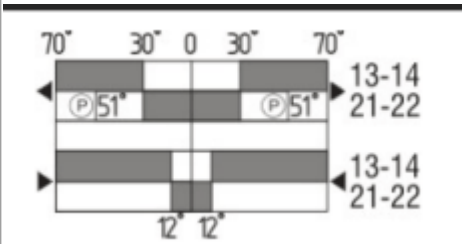

Expected Values: 12V

Related Fault Codes:

Fault Code	Fault Description
B1011-17 553	Artic Boom Lower Limit Switch 1 Short Circuit to High
B1012-17 554	Artic Boom Lower Limit Switch 2 Short Circuit to High
B1013-16 555	Artic Boom Lower Limit Switch 1 Short
B1014-13 556	Artic Boom Lower Limit Switch 1 AND Switch 2 Open Circuit
B1015-16 557	Artic Boom Lower Limit Switch 2 Short Circuit to Low
B1016-92 558	Artic Boom Lower Limit Switch 1 AND Switch 2 short to 10V

4.13 Slew Position Limit Switch

Slew Position Limit Switch

Components 134 > Slew Position Limit Switch

© 2026 JCB INDIA LTD

Component :	Slew Position Limit Switch
Function:	• The Slew position limit sensor is to understand the slew position of the machine and operator. • As the machine is slewed round out of the forward position, the machine will pause any drive conditions until the operator has pressed the slew acknowledgment switch. This is so the operator is sure of the direction that the machine will operate in.
Location:	On Turntable

© 2026 JCB INDIA LTD

Location

Image:

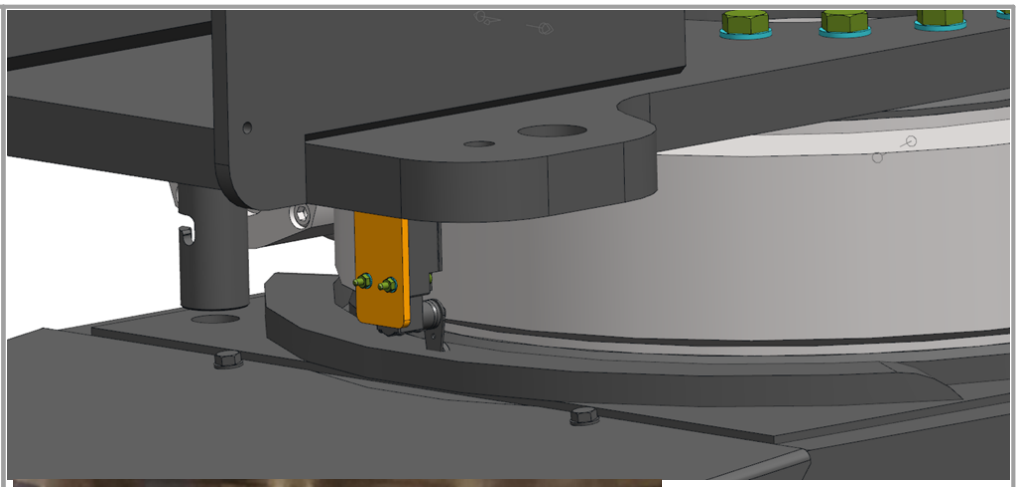



Signal:

Pin Number	Description	Wire number
13	10V	A-13
14	Slew position Sw 1	B-14
21	10V	A-21
22	Slew position Sw 2	C-22

© 2026 JCB INDIA LTD

Wires & Connectors :	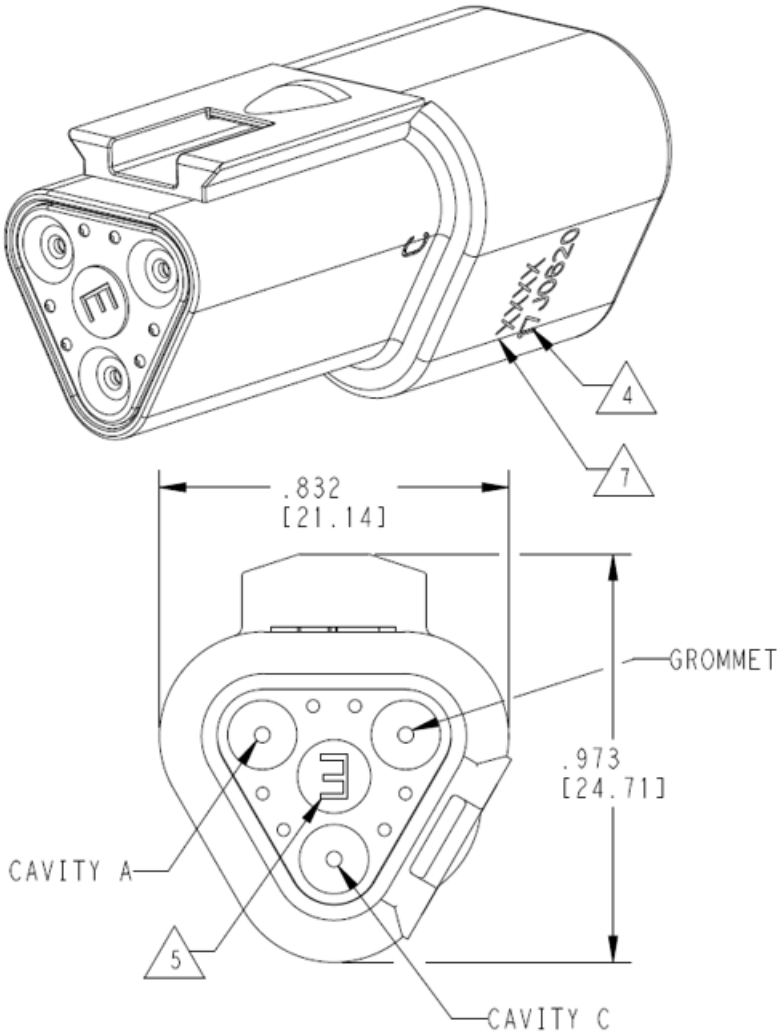
Internal Electrical Schematic:	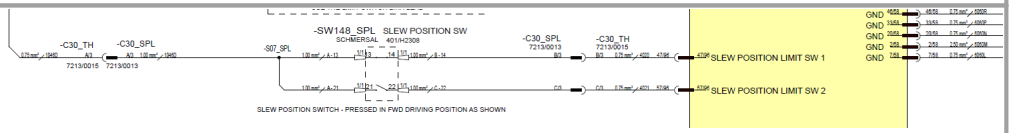

© 2026 JCB INDIA LTD

Testing:	Important: Use the multi-meter on the harness connector pins. DO NOT USE the meter on the ECU pins. 1. Check the gland nut tightened properly there should be no water ingress 2. Check the switch position pressed or undressed. 3. It should be un-pressed In natural state 4. Check the continuity between pin 13 and 14 it should be open circuit 5. Check the continuity between pin 21 and 22 it should be close circuit 6. When switch is pressed then Pin 13 & 14 should be closed circuit and 21 & 22 should be open circuit 7. Switch position is at 0 degree when is not pressed 8. Switches changes at 30 degrees going from center and 12 degrees on the way back towards center
Expected Values:	12V

© 2026 JCB INDIA LTD

Related Fault Codes:	Fault Code	Fault Description
	B1019-17 562	Slew position switch 1 - Circuit short to high (12v)
	B1020-17 563	Slew position switch 2 - Circuit short to high (12v)
	B1021-16 564	Slew position switch 1 - Circuit short to low
	B1022-13 566	Slew position switch - Signal plausibility failure (Circuit open)
	B1023-16 567	Slew position switch 2 - Circuit short to low
	B1024-92 568	Slew position switch - Signal plausibility failure (12v)

4.14 Alternator & Resistor

Alternator & Resistor

Components 134 > Alternator Resistor

Component:	Alternator Resistor
Function:	• The alternator is a three phase generator having a rotating field winding and static power windings. When the ignition switch is turned on, the current from the battery flows by way of the No Charge warning light to the field winding. This creates a magnetic field which supplements the residual magnetism in the rotor poles. As the engine is started, the fan belt drives the rotor and the alternating current is generated in the power windings as they are cut by the rotating magnetic field. Output is controlled by a solid state regulator which varies the field current in accordance with electrical demand to charge the battery. • The alternator resistor is used to excite the alternator and ensure the alternator no charge LED is switched off at the correct time.

© 2026 JCB INDIA LTD

Location:	On Engine
Location **Image:**	 
Signal:	

Pin number	Description	wire number
1	12V feed	1010
2	Signal	1011

© 2026 JCB INDIA LTD

	Digital Input from alternator to base ECU On = 12V OFF = 0V
Wires & Connectors :	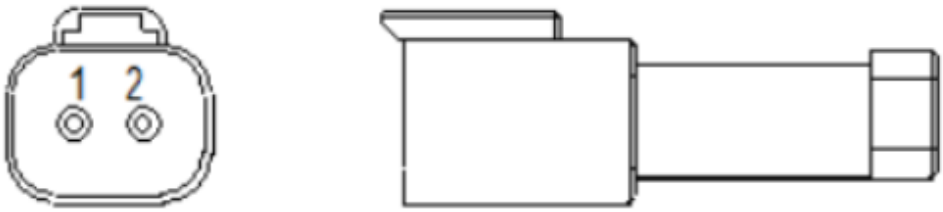
Internal Electrical Schematic:	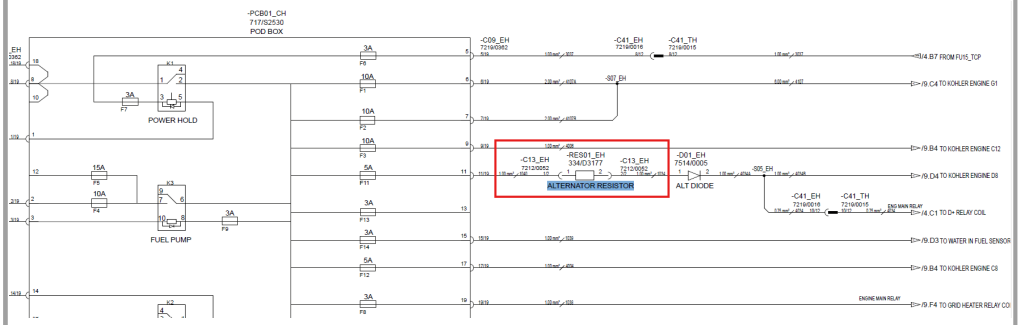

© 2026 JCB INDIA LTD

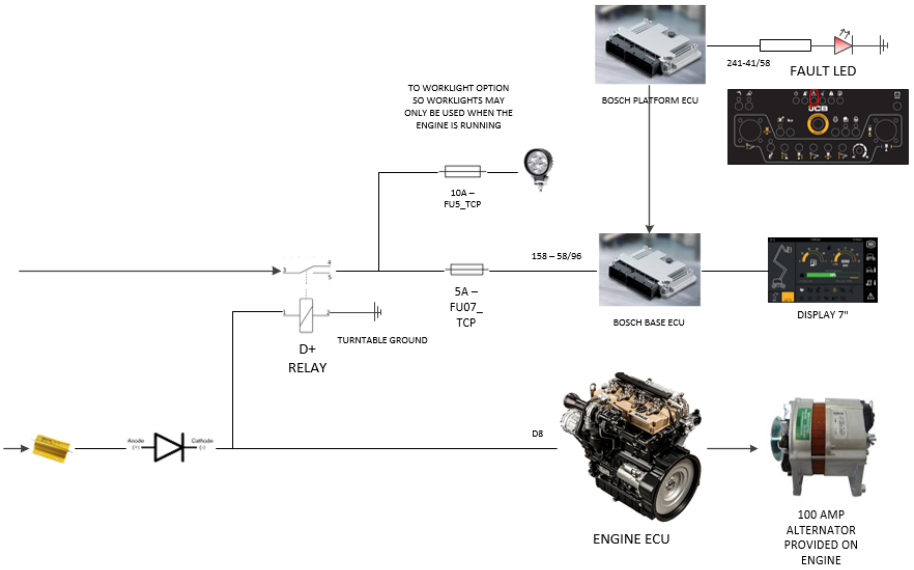

Testing:

Important: Use the multi-meter on the harness connector pins. DO NOT USE the meter on the ECU pins

1.Using a multimeter measure the resistance between pin 1 and pin 2. It should read 39?

Expected Values:

12Volt

Related Fault

Fault Code	Fault Description
B1300-2F 846	ALTERNATOR FAULT
B1681-13 908	Unexpected Alternator input fault Short to low (When engine is started / Engine running)

© 2026 JCB INDIA LTD

Codes:	

4.15 Engine POD Box



Engine POD Box

Components 134 > Engine POD Box

Component:	Engine POD Box
Function:	The pod box is to provide power for the Kohler engine.
Location:	Protection: This box designed for all fuses protecting the Kohler Engine

© 2026 JCB INDIA LTD

Location **Image:**	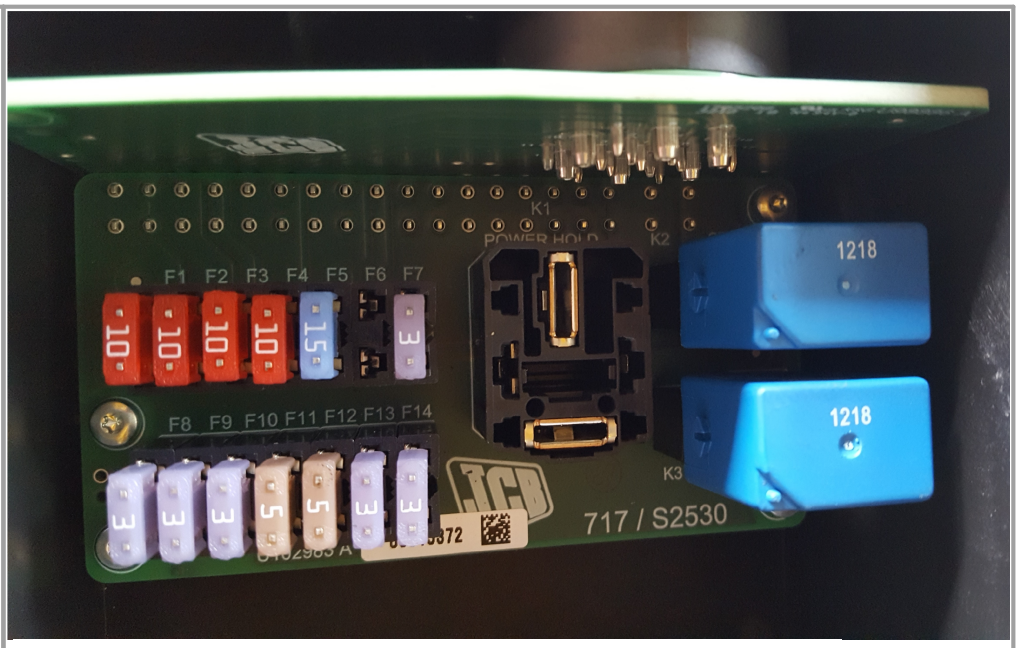 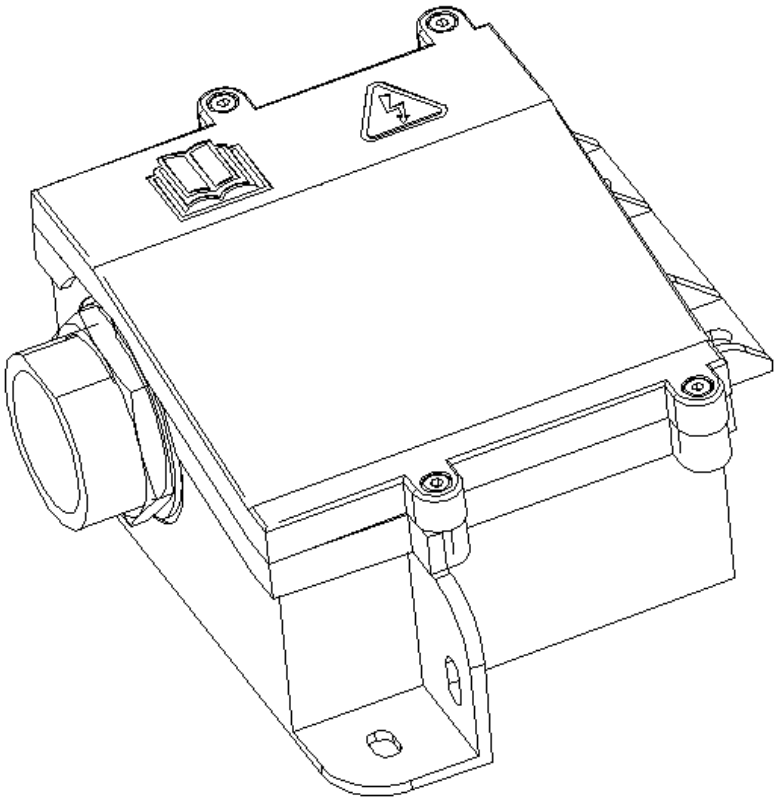

© 2026 JCB INDIA LTD

Signal:

Relay designation	Relay rating (Amps)	Function
K1	30/20	Power Hold Relay
K2	35/20	Starter Relay
K3	35/20	Fuel Pump Relay

Fuse designation	Fuse rating (Amps)	Function
F1	10	Engine G1 - 12 V power supply, from main relay
F2	10	Engine G1 - 12 V power supply, from main relay
F3	10	Engine C12 - 12 V power supply for EGR valve
F4	10	Fuel Pump Motor Feed
F5	15	Fuel Pump Motor Feed
F6	3	Power Box
F7	3	Power box
F8	3	Grid heater relay coil

© 2026 JCB INDIA LTD

	F9	3	Fuel pump relay coil
	F10	3	Starter relay coil
	F11	5	Engine D8 - Alternator D+ terminal
	F12	5	Engine C8 - 12 V power supply, from battery
	F13	3	NA
	F14	3	Water in fuel sens

Wires & Connectors :

Connector Part number is 7219/0362

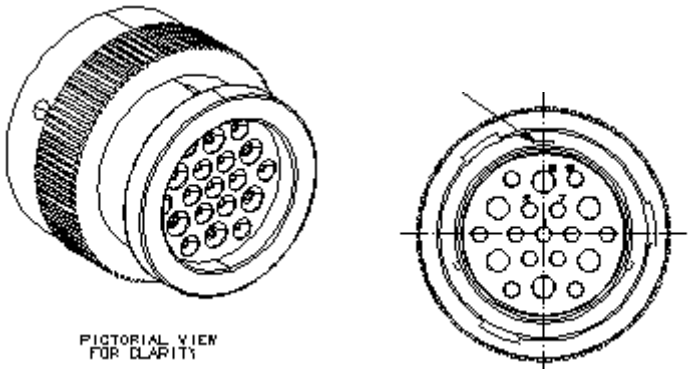

Internal Electrical Schematic:

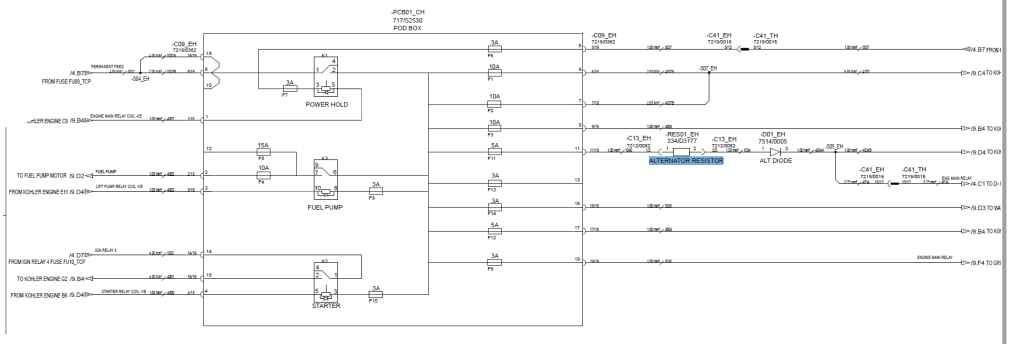

© 2026 JCB INDIA LTD

Testing:	Important: Use the multi-meter on the harness connector pins. DO NOT USE the meter on the ECU pins 1.Check all the connection in Pod Box are properly secure 2.Check the continuity in all connections, fuse & relay located inside Pod Box
Expected Values:	See the Signal
Related Fault Codes:	No Fault Code related to POD Box

4.16 Work Light (Optional Fit)



Components 134 > Work Light (Optinal Fit)

© 2026 JCB INDIA LTD

Component :	Work Light (Optional Fit)
Function:	•The work-light is LED and is optional fit. •It will only operate when the engine is running. •A work light is a high-intensity light fixture which is used to illuminate the stage for the benefit of technicians
Location:	On Platform Rail

© 2026 JCB INDIA LTD

Location

Image:

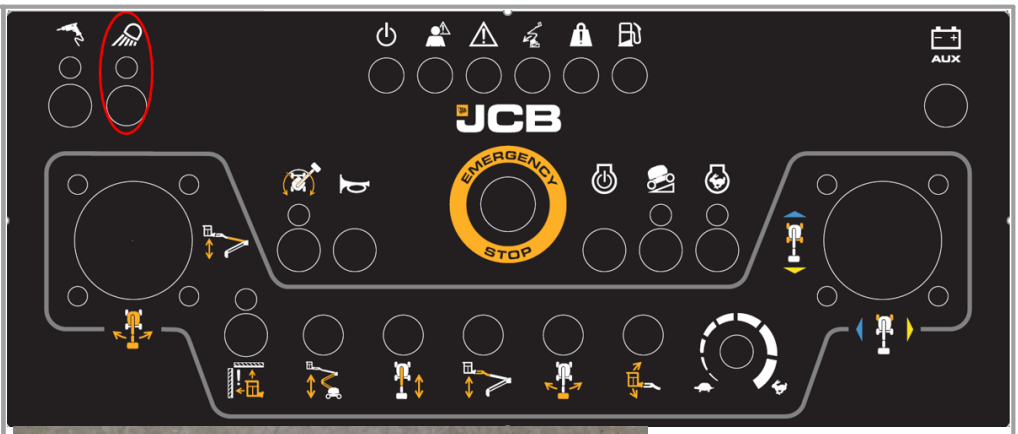



© 2026 JCB INDIA LTD

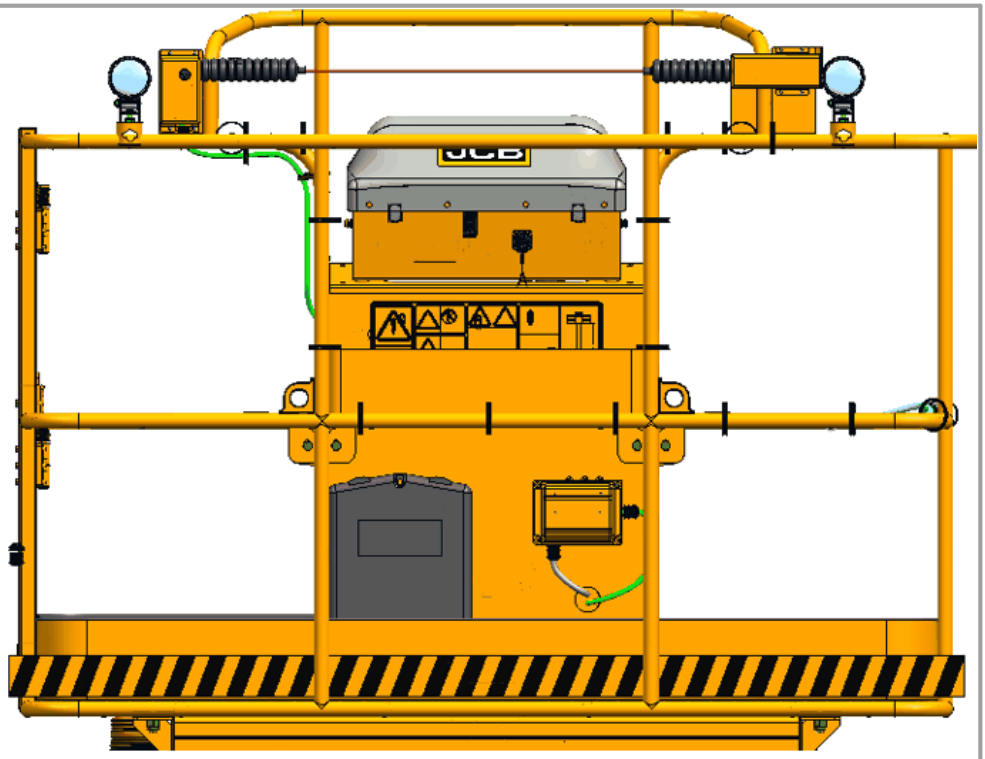

Signal:

C02_LWH		
Pin Number	Description	Wire Number
1	D+ Supply	8079B
2	GND	6079B
C03_LWH		
Pin Number	Description	Wire Number
1	D+ Supply	8079B
2	GND	6079B

© 2026 JCB INDIA LTD

Wires & Connectors :	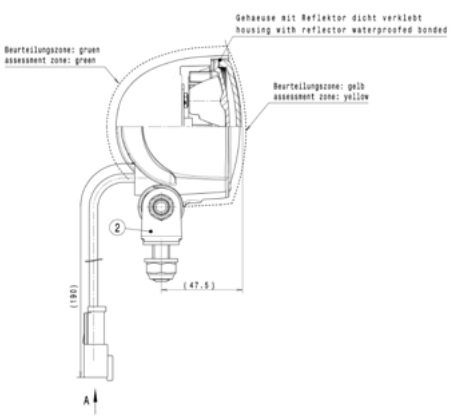 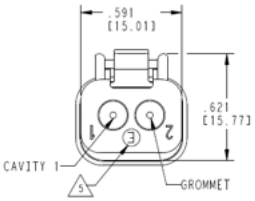 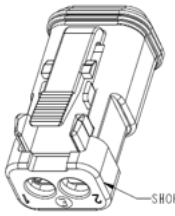
Internal Electrical Schematic:	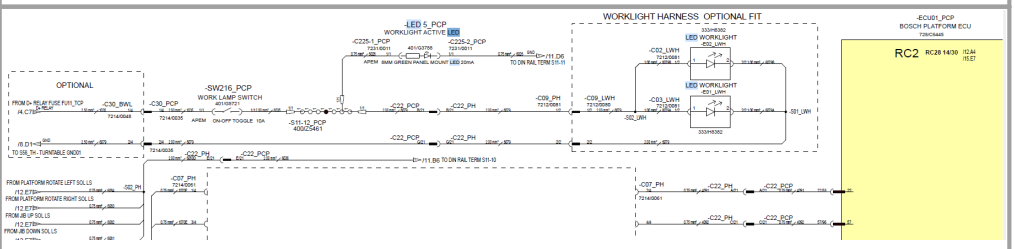
Testing:	Important: Use the multi-meter on the harness connector pins. DO NOT USE the meter on the ECU pins 1.Disconnect the electrical connector from the beacon. 2. With the ignition on, and the work light button selected, check using a multimeter if there is 12V present at pin 1 and at pin 2 the earth resistance . 3 If there is 12V present and the earth resistance is within range, replace the work light

© 2026 JCB INDIA LTD

Expected Values:	12V
Related Fault Codes:	N/A

4.17 Batteries



Batteries

Components 134 > Batteries

Component :	Batteries
Function:	The batteries are to provide the main power for the machine.Be careful when working around batteries as there is 2 batteries in parallel.

© 2026 JCB INDIA LTD

Location:	Battery is located at rear side of chassis, near rear axle.

© 2026 JCB INDIA LTD

Location **Image:**	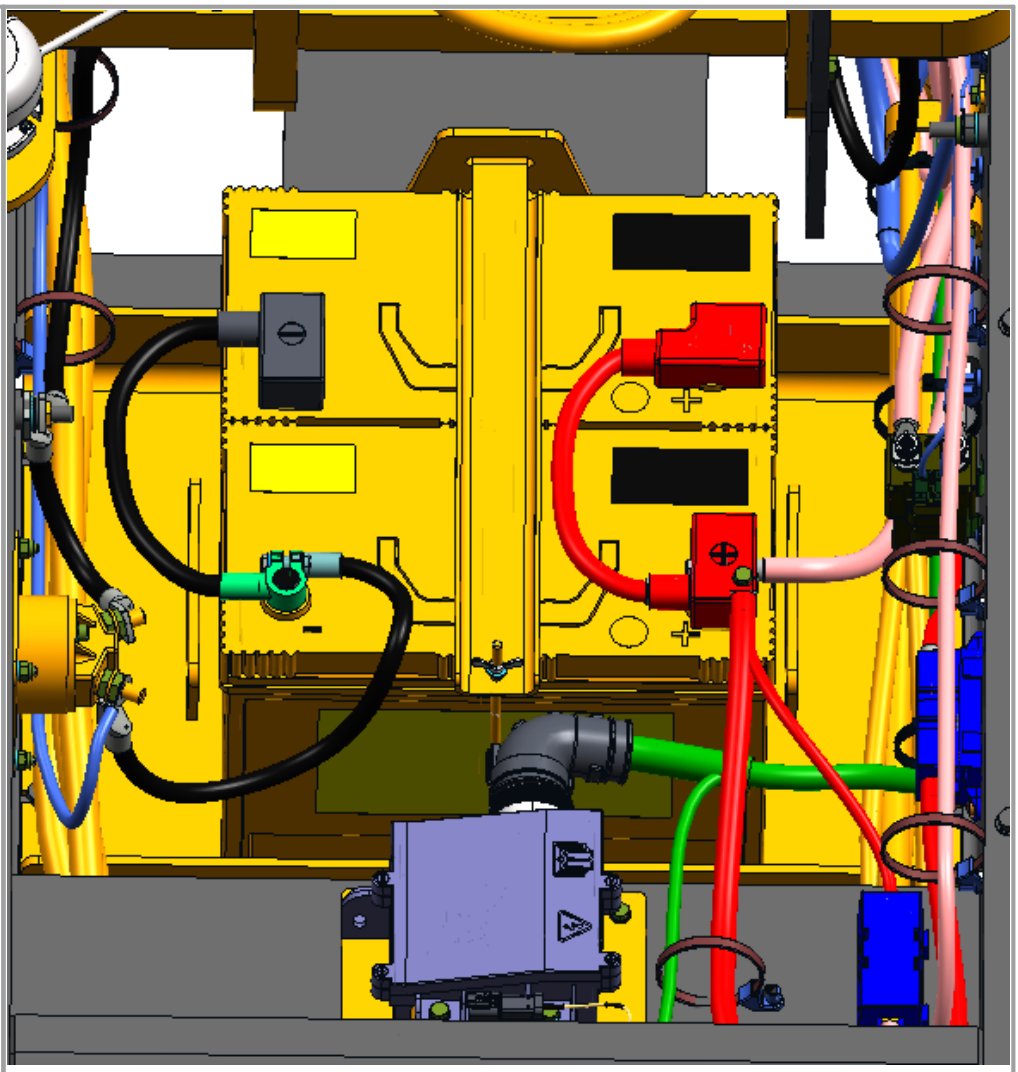

© 2026 JCB INDIA LTD

	
Signal:	12 volt, parallel connection

© 2026 JCB INDIA LTD

Wires & Connectors :

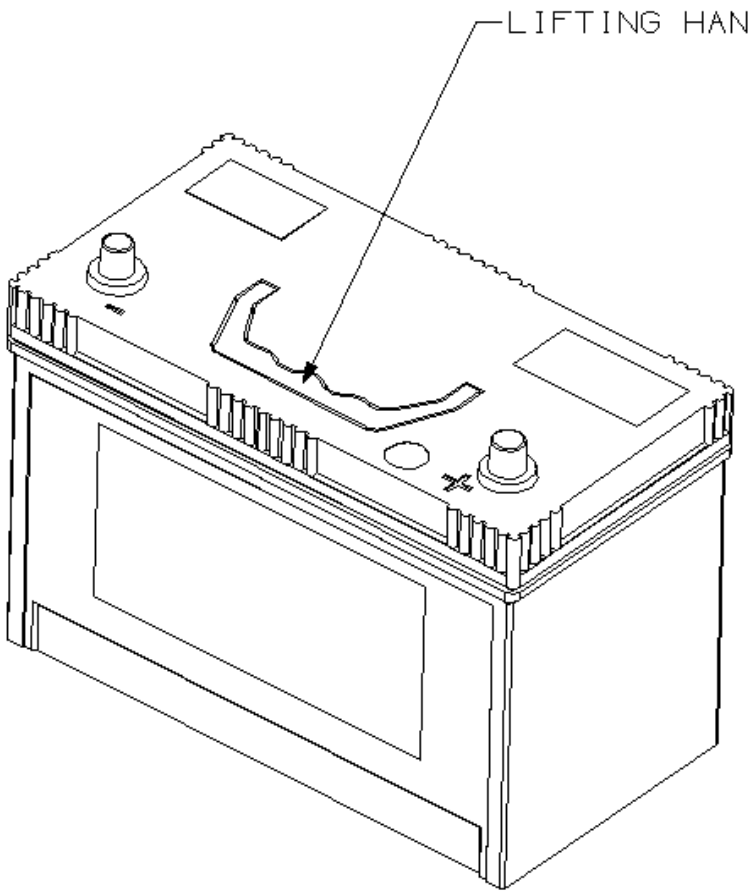

Internal Electrical Schematic:

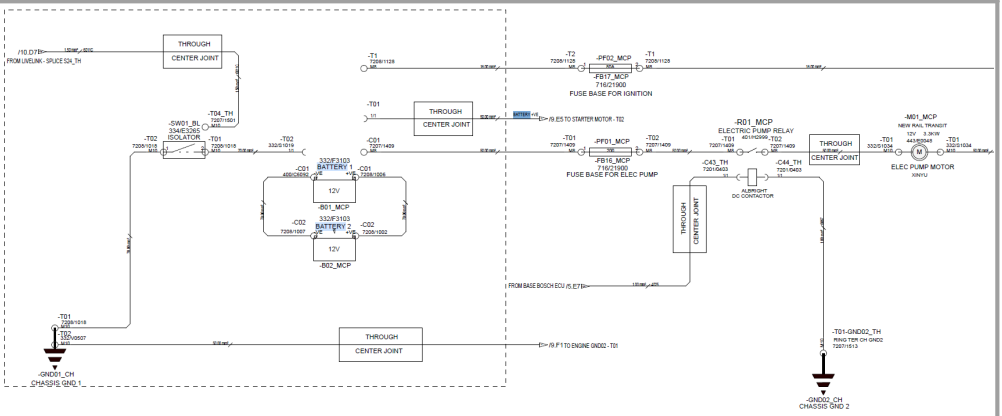

© 2026 JCB INDIA LTD

Testing:	Important: Use the multi-meter on the harness connector pins. DO NOT USE the meter on the ECU pins 1. Battery Discharged-Ensure the battery has sufficient charge to power the machine. Test state of charge using a battery charger/conditioner. Recharge/replace as required.If battery has sufficient charge or fault remains, proceed to step 2. 2. Battery connection fault-Check the electrical connectors from the battery for signs of damage/corrosion, clean the terminals and apply a suitable electrically conductive grease to the connections. Repair/replace battery or connectors as necessary. If the fault remains, proceed to Step 3. 3. Poor Earth-Check battery earth and machine earth(s) for signs of damage/corrosion, clean the terminals and ensure bolts are tighten to the appropriate torque (see machine service manual for torque value).If the fault remains, proceed to Step 4.\ 4. Battery fault-Test battery voltage and power hold relay voltage at the ECU. Compare these 2 values. If values do not match, follow the relay testing procedure below: a. Repair or replace as required.

© 2026 JCB INDIA LTD

	b. With the relay installed, apply 5V across the relay. If the relay does not click, replace the relay. If the fault is still active proceed to step 5. c. Check continuity back to power supply - especially around the pins and coils. Turn on the ignition and check for 5V at the power hold fuse, Pod box connector, inside the Pod box at the power hold relay base power in terminal. Repair or replace as required. If the fault remains, proceed to Step 5. 5. Battery charging circuit-Check the battery charge circuit (see engine service manual for alternator diagnosis and repair).Repair/replace as necessary.
Expected Values:	12 V
Related Fault	N/A

© 2026 JCB INDIA LTD

Codes:	

4.18 White Noise Alarm



White Noise Alarm

Components 134 > White Noise Alarm

Component :	White Noise Alarm
Function:	The travel white noise alarm will sound when the machine is traveling or steering to make people around the machine aware or machine movement. The travel white noise alarm will only come on when command from the platform control station for drive or steer is applied The travel alarm may be turned off through the display or service-master
Location :	On Turntable RHS

© 2026 JCB INDIA LTD

Location Image:

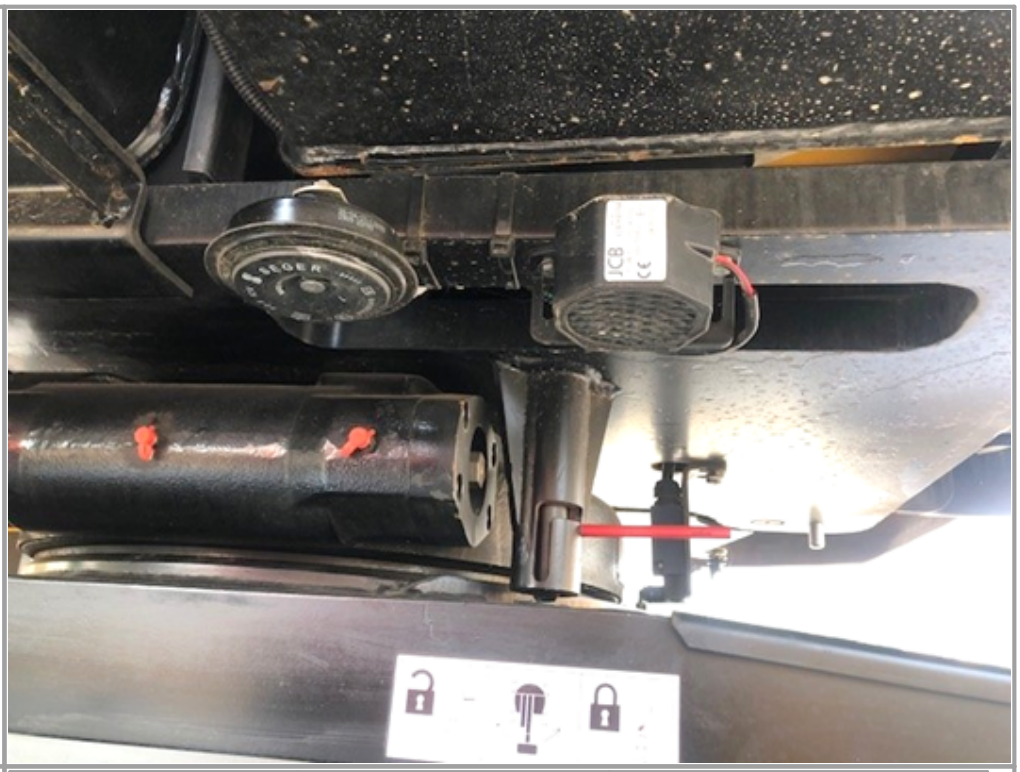

Signal:

Pin Number	Description	Wire Numbers
1	12V	4036
2	GND	6036

Wires & Connectors :

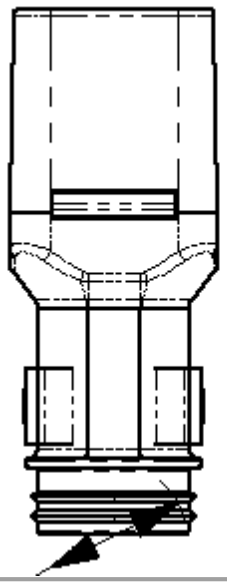

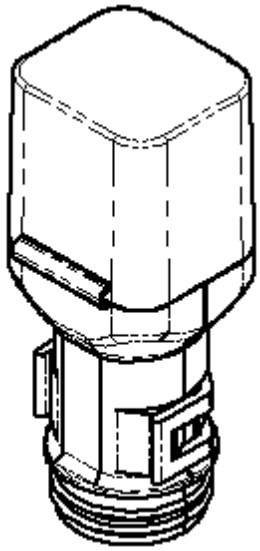

© 2026 JCB INDIA LTD

Internal **Electrical** **Schematic:**	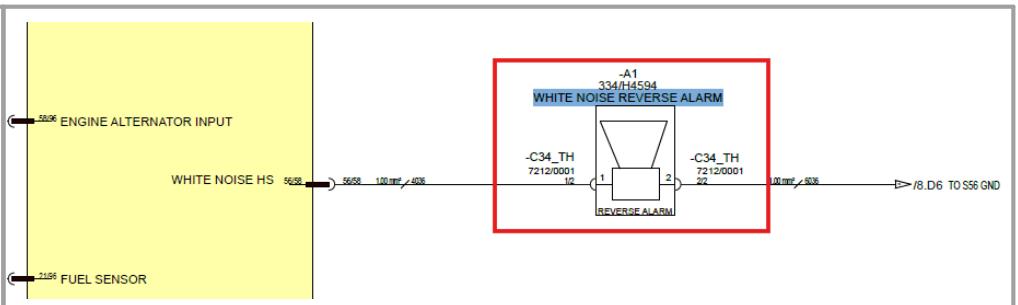
Testing:	Important: Use the multi-meter on the harness connector pins. DO NOT USE the meter on the ECU pin **Before fault finding on the white noise alarm ensure that it is enabled in the software.** To check the white noise alarm, go to the platform control station and press the foot pedal and use drive joystick for either drive forwards and backwards or steer functions. 1.The foot pedal is fed from 10V ECU pin (232-32/58) platform ECU 2.Foot pedal input (147-47/96) on the platform ECU 3.The joystick feed is via a 5V ECU pin (255-55/58) platform ECU 4.Joystick drive pin (120-20/96) platform ECU 5.Steer joystick pin (141-41/96) platform ECU 6.White noise alarm output (256-56/58) turntable ECU

© 2026 JCB INDIA LTD

Expected Values:	12V
Related Fault Codes:	**Fault Code** / **Fault Description** B1183-16 731 — White noise alarm - Circuit short to low B1184-13 733 — White noise alarm - Circuit open or short to high (12v)

4.19 Beacon

Beacon

Components 134 > Beacon

Component:	Beacon
Function:	•The travel beacon will flash when the machine is traveling or steering to make people around the machine aware or machine movement.

© 2026 JCB INDIA LTD

<table>
<tr><td></td><td>•The beacon will only come on when command from the platform control station</td></tr>
<tr><td>Location:</td><td>Top side of Counter Weight</td></tr>
<tr><td>Location Image:</td><td> 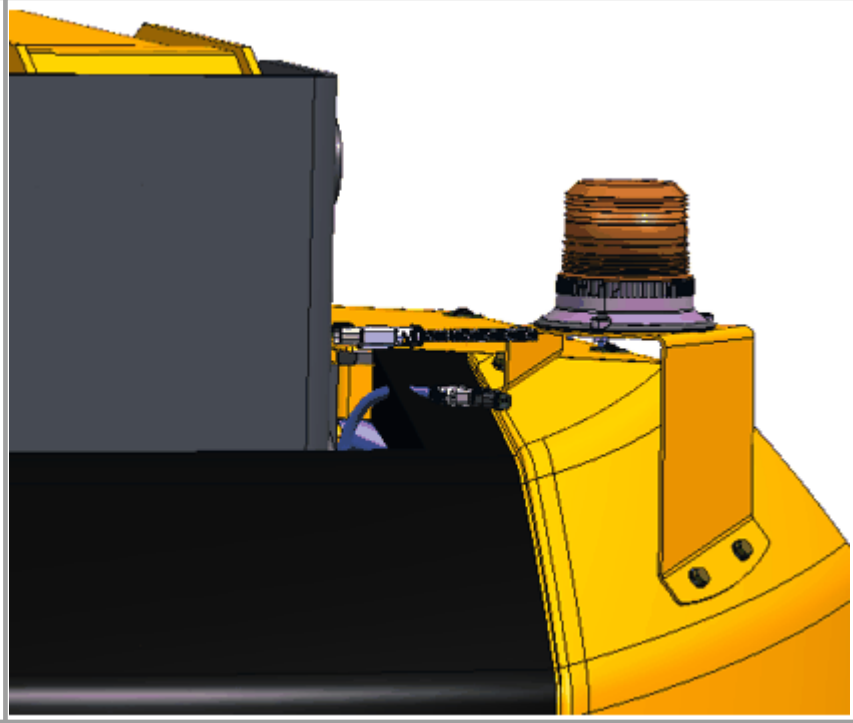 </td></tr>
<tr><td>Signal:</td><td>
<table>
<tr><th>Pin Number</th><th>Description</th><th>Wire number</th></tr>
<tr><td>1</td><td>Beacon positive from 43/58 turntable ECU</td><td>4032</td></tr>
<tr><td>2</td><td>Negative - turntable GND</td><td>6032</td></tr>
</table>
</td></tr>
</table>

© 2026 JCB INDIA LTD

Wires & Connectors :	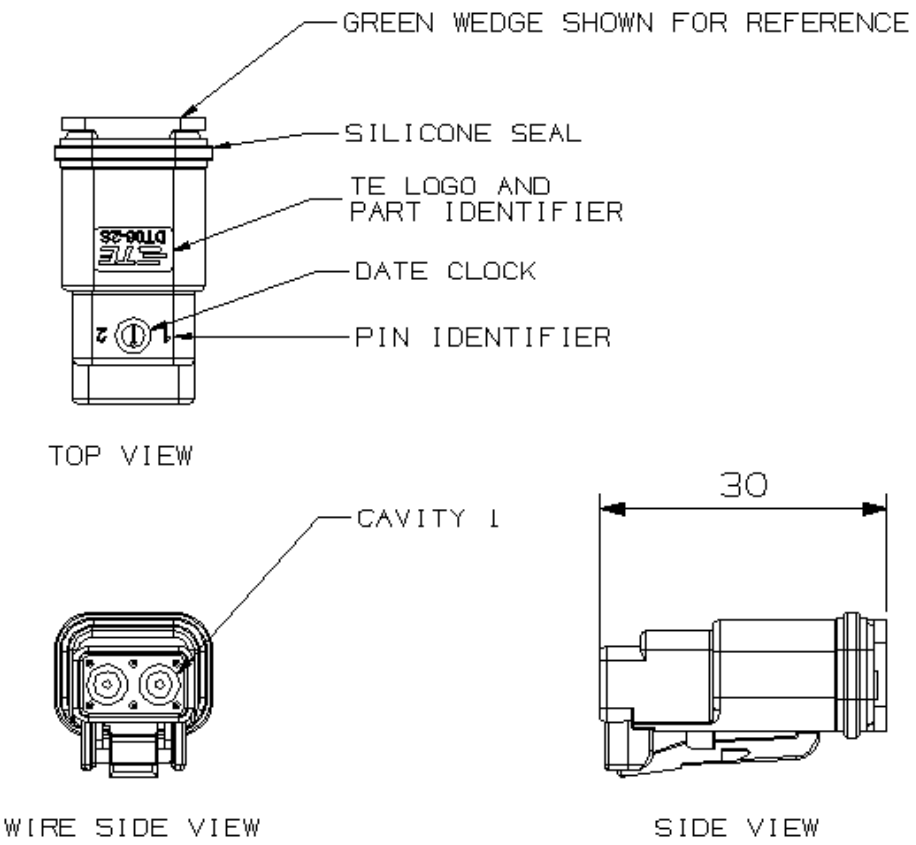
Internal Electrical Schematic:	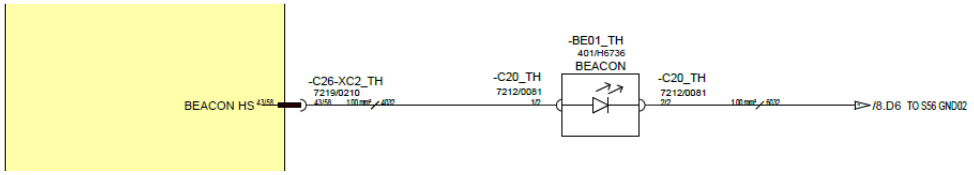
Testing:	Important: Use the multi-meter on the harness connector pins. DO NOT USE the meter on the ECU pins.

© 2026 JCB INDIA LTD

	1. Disconnect the electrical connector from the beacon. 2. With the ignition on, and the beacon button selected, check using a multimeter if there is 12V present at pin 1 and at pin 2 the earth resistance (harness side). 3. If there is 12V present and the earth resistance is within range, replace the beacon/beacon socket. 4. If there is not 12V present check fuse FU19 and the beacon relay , if the resistance is outside the range specified in step 2, check the continuity of the wire and condition of the earth stud
Expected Values:	12 V
Related Fault Codes:	**Fault Code** / **Fault Description** B1135-13 693 — Beacon 2 - Circuit open or short to high (12v) B1136-16 694 — Beacon 2 - Circuit short to low B1179-13 726 — Beacon 1 - Circuit open or short to high (12v) B1180-16 728 — Beacon 1 - Circuit short to low

© 2026 JCB INDIA LTD

4.20 Isolator



Isolator

Components 134 > Isolator

Component :	Isolator
Function:	•The isolator is fitted to isolate the machine for maintenance. •This should not be used to cut power while the engine is on. •Always take care when working on machine isolator •Always ensure cables are wired to schematic as there is cables to both sides of the isolator, this is to allow permanent connections when the key is out such as display clock and Livelink.
Location:	On Turntable LHS

© 2026 JCB INDIA LTD

Location **Image:**	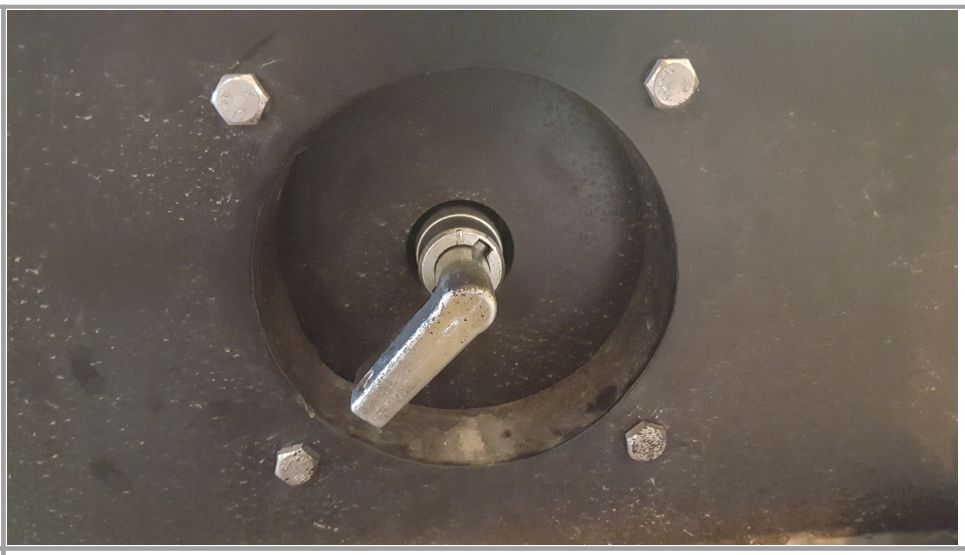
Signal:	12 V
Wires & **Connectors** **:**	Connections to the isolator are M10 Ring terminals  The thickest cable should always be put on to isolator first and thinnest at the top.

© 2026 JCB INDIA LTD

Internal **Electrical** **Schematic:**	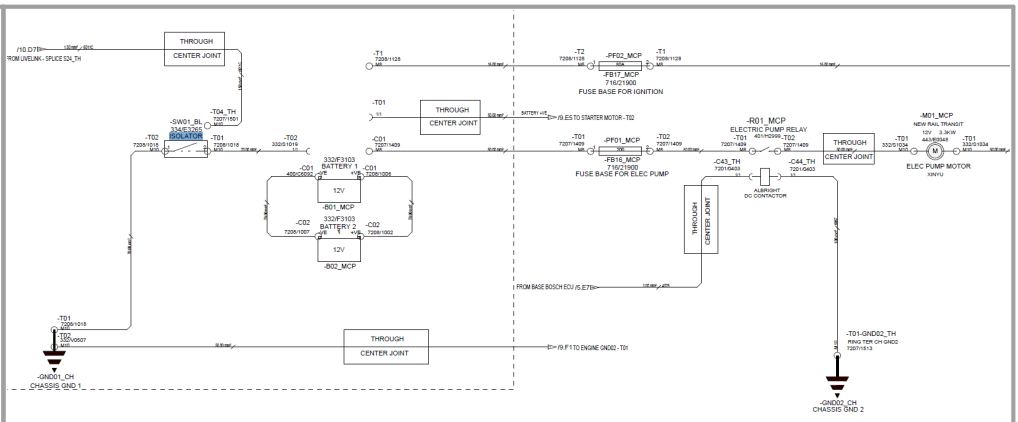
Testing:	**Identify the issue** 1. Test the isolator using a multimeter across the back of the 2 terminals. 2. With the key removed this should show open circuit across the switch 3. When the key is inserted and turned to the ON position the multimeter should show closed circuit. If the isolator does not show this then replace the part or contact JCB Service department
Expected Values:	0 volt, connect in ground line in series

© 2026 JCB INDIA LTD

Related Fault Codes:	N/A

4.21 Kohler Engine ECU



Components 134 > Kohler Engine ECU

Component :	Kohler Engine ECU
Function:	•The Engine ECU is a Kohler ECU. •This page will only show mounting. See Kohler Help files for more details on control system
Location:	On Chassis Near engine tray

© 2026 JCB INDIA LTD

Location **Image:**	 

© 2026 JCB INDIA LTD

Signal:	
Wires & Connectors :	
Internal Electrical Schematic:	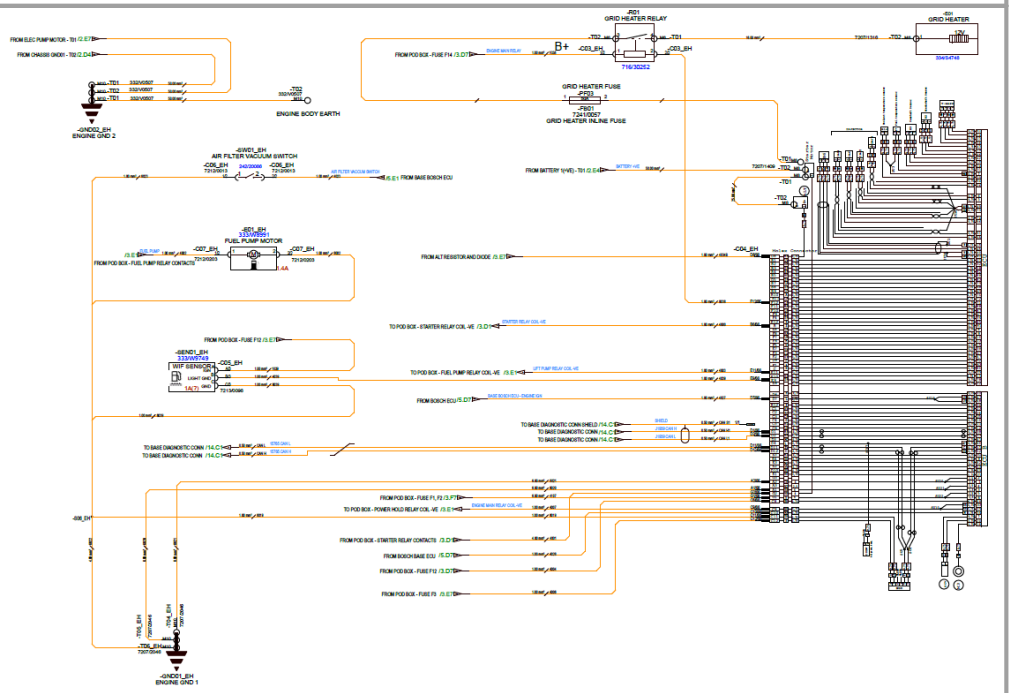
Testing:	Please refer Kohler Manual

© 2026 JCB INDIA LTD

Expected Values:	Please refer Kohler Manual
Related Fault Codes:	Please refer Kohler Helpfile

4.22 Horn



Horn

Components 134 > Horn

Component :	Horn
Function:	•The horn can be pressed from the Base or platform control station. There is only one horn output which is below the base control box.

© 2026 JCB INDIA LTD

	•The horn input buttons are fed from a 10V feed on the Bosch ECU (Pin 32/58 - VSS2). •Once the button is pressed the 10V will pass through to the Horn input pin on the ECU (Pin 52/58) •The platform ECU will communicate to the base ECU over CAN communication. •The output for the Horn is from the base ECU, (Pin 44/58) •When an input signal is received the horn output (Pin 44/58) will output 12V's and then enable the Horn relay. •As the relay pulls in the horn will sound.
Location:	On Turntable LHS

© 2026 JCB INDIA LTD

Location

Image:

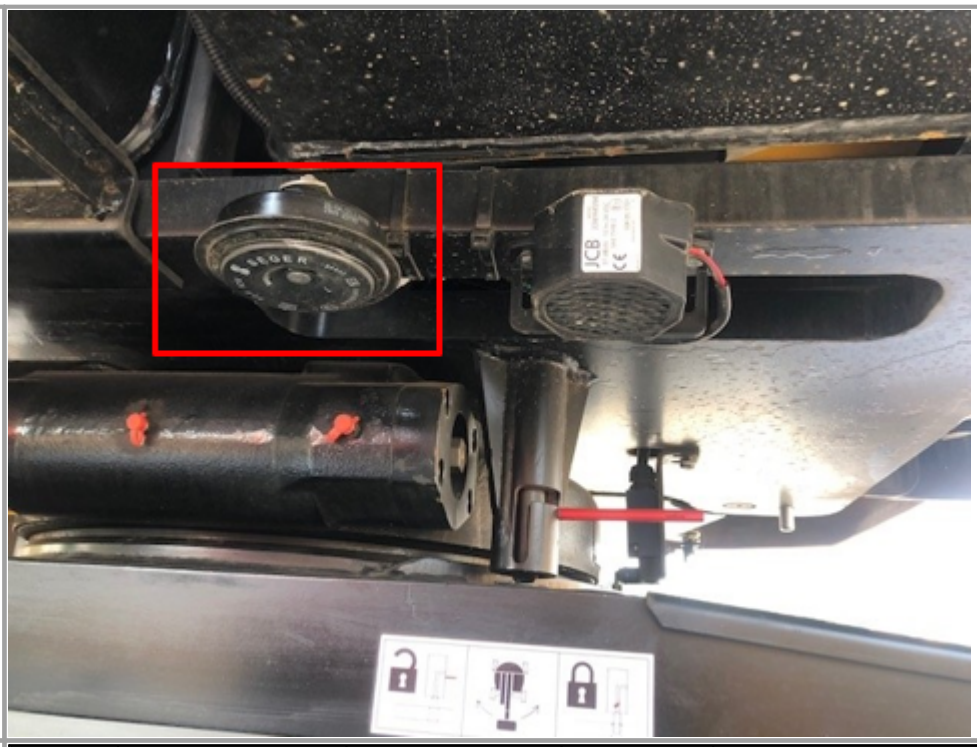

Signal:

Pin	Description	Connector Number	Wire Number	Voltage when Active
1	12V input	C17_TH	77	12V
2	GND	C17_TH	6077	0V

© 2026 JCB INDIA LTD

Wires & Connectors :	-C17_TH#1 7212/0008 HORN 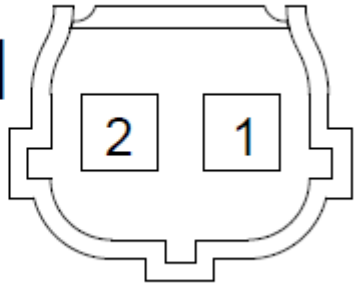 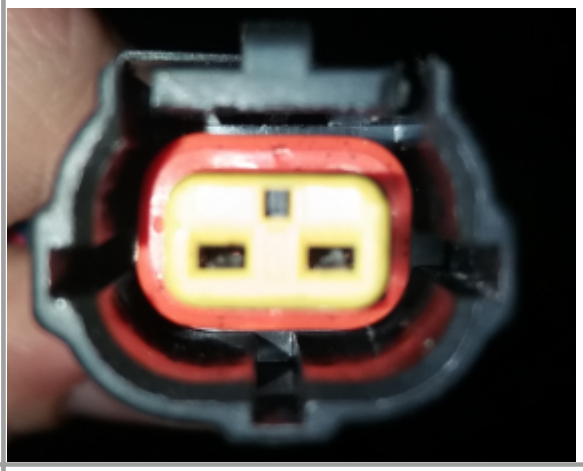
Internal Electrical Schematic:	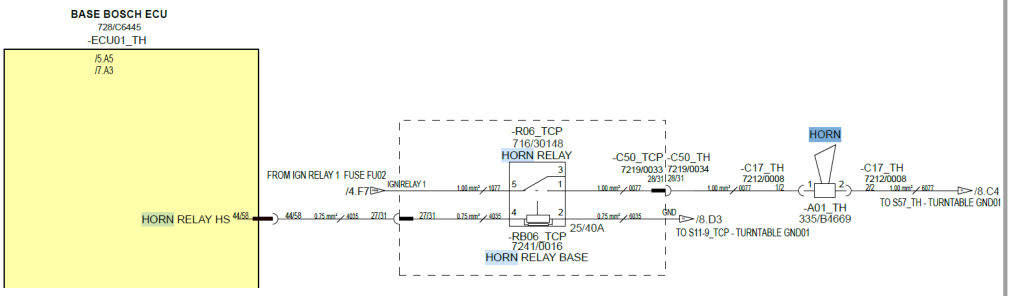
Testing:	**Identify the issue** 1. Visual check around machine and visual check of horn.

© 2026 JCB INDIA LTD

	2. Turn the ignition on and wait for 3 beeps from control panel to ensure ECU start up. 3. Check for error codes on the display - see fault code list to resolve, if not move to next step. 4. Navigate through the display to inputs (turntable or platform depending on button being pressed) or connect service-master diagnostic tools and go to the horn page. 5. Press the horn button (turntable or platform) and check if input is received by ECU. 6.If the input is received then repeat with the output menu to identify which side is failing. **Outcome** 1.If the input is not received then check voltage at input switch (should be 10V), switch logic and then wire between switch and ecu pin (52/58). 2.If both input is received and output is activated, check the voltage at the horn connector, if voltage is available, check the horn. 3.if no voltage at the horn connector, check relay R05, & 10A fuse at FU02 in turntable control panel.

© 2026 JCB INDIA LTD

	4.If no voltage at FU02 then check ignition relay 1 (R01_TCP). 5.If the input is received with no output, contact JCB Service team as likely software issue.
Expected Values:	12V
Related Fault Codes:	**Fault Code** / **Fault Description** B1181-16 729 — Horn relay - Circuit short to low B1182-13 730 — Horn relay - Circuit open

4.23 Axle Lock Pressure Sensor



Axle Lock Pressure Sensor

Components 134 > Axle Lock Pressure Sensor

Component :	Axle Lock Pressure Sensor

© 2026 JCB INDIA LTD

Function:	The Axle lock pressure sensor is there to ensure the control system has locked the axle correctly and to give feedback to the machine control system
Location:	Rear Side of Chassis

© 2026 JCB INDIA LTD

Location **Image:**	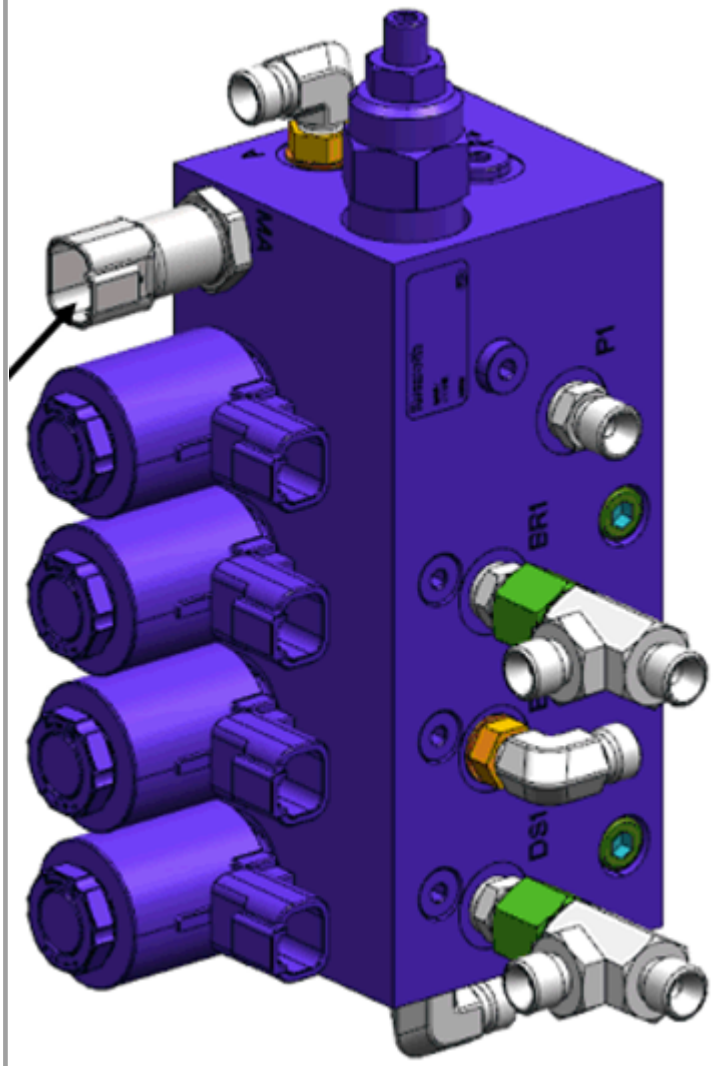 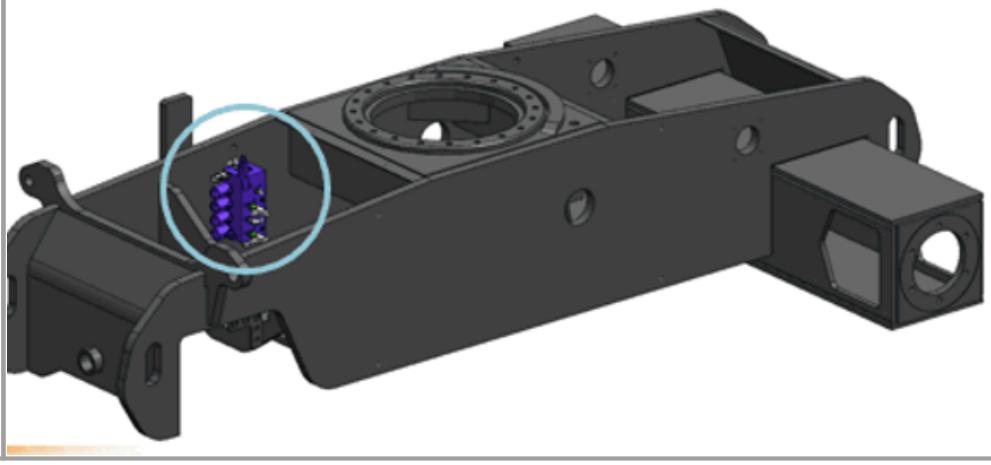

© 2026 JCB INDIA LTD

Signal:

Pin	Description	Connector Number	Wire Number	Voltage
1	GND	C214_TH	6012	0V
2	12V	C214_TH	1012	12V
3		C214_TH	NOT USED	
4	Output to ECU 0.5-6V	C214_TH	4012	0.5-6V

Wires & Connectors :

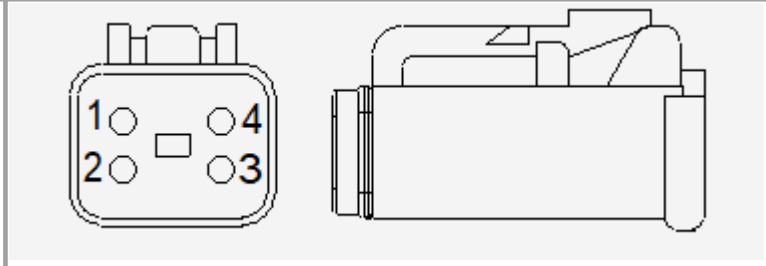

Internal Electrical Schematic:

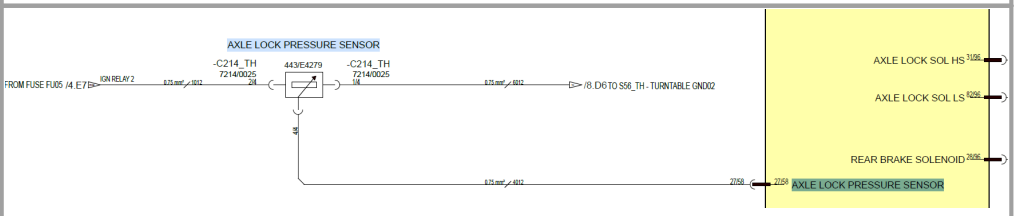

Testing:

Important: Use the multi-meter on the harness connector pins. DO NOT USE the meter on the ECU pins

1. Axle lock pressure sensor measure pressure and convert to voltage

2. Ensure no water ingress inside sensor

© 2026 JCB INDIA LTD

	3. Check out put signal at connector C214_TH Pin no 4/4. This should read 0.5V to 4.5V 4. If there is no out put check input voltage at connector C214_TH (Pin 1 & 2) this should read 12V 5. If there is no 12V then investigate wiring as per schematic 6. If there is 12V inputs available but no out put signal then it might internal damage to sensor, Replace it
Expected Values:	12 V
Related Fault Codes:	

Fault Code	Fault Description
B1227-17 780	Oscillating axle lock pressure sensor - Circuit short to high (12v)
B1228-16 782	Oscillating axle lock pressure sensor - Circuit open or short to low
B1236-2F 786	Oscillating axle lock pressure sensor - Failure
B1238-2F 788	Oscillating axle lock pressure sensor - Output is less than 1v when it should be greater than 1v
B1272-2F 826	Oscillating axle lock pressure sensor - Output is greater than 1v when it should be less than 1v
B1288-2F 845	OSCILLATING AXLE PRESSURE SENSOR SOFTWARE Failure
B1301-2F 848	Oscillating axle lock pressure sensor - Failure

© 2026 JCB INDIA LTD

4.24 Platform and Jib Valve Block

Platform and Jib Valve Block

Components 134 > Platform and Jib Valve Block

Component :	Platform and Jib Valve Block
Function:	•This valve block is used to divert oil between the Jib and Platform rotate functions. •When the platform rotate or Jib switch is pressed this enables the correct solenoid to energize. •This is used in conjunction with the Public proportional solenoid and platform flow solenoid from the turntable valve block
Location:	Near Platform Rotator

© 2026 JCB INDIA LTD

Location **Image:**	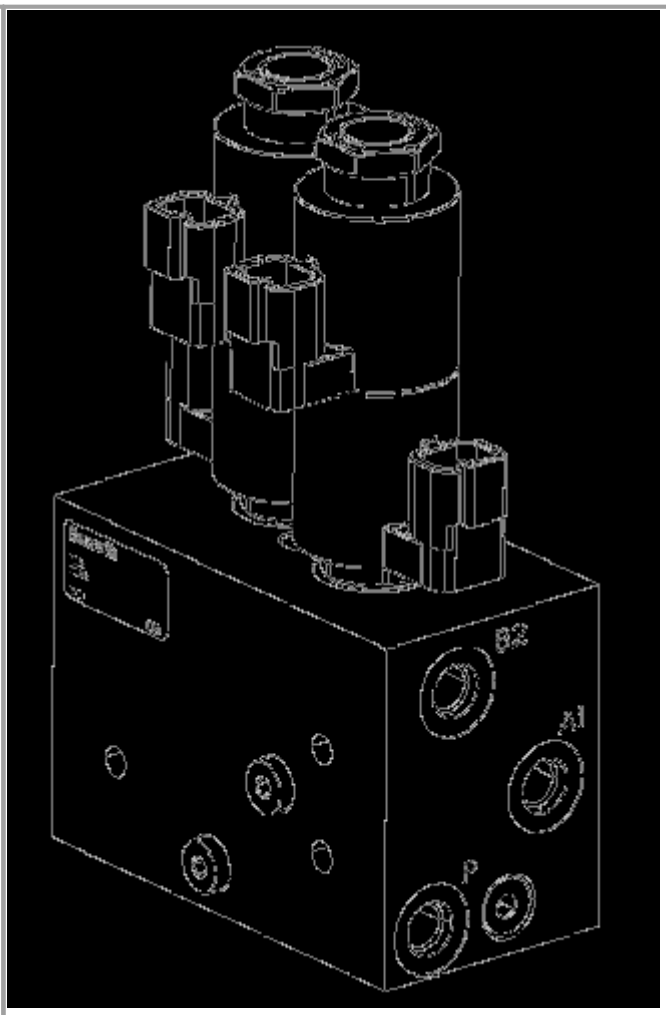

© 2026 JCB INDIA LTD

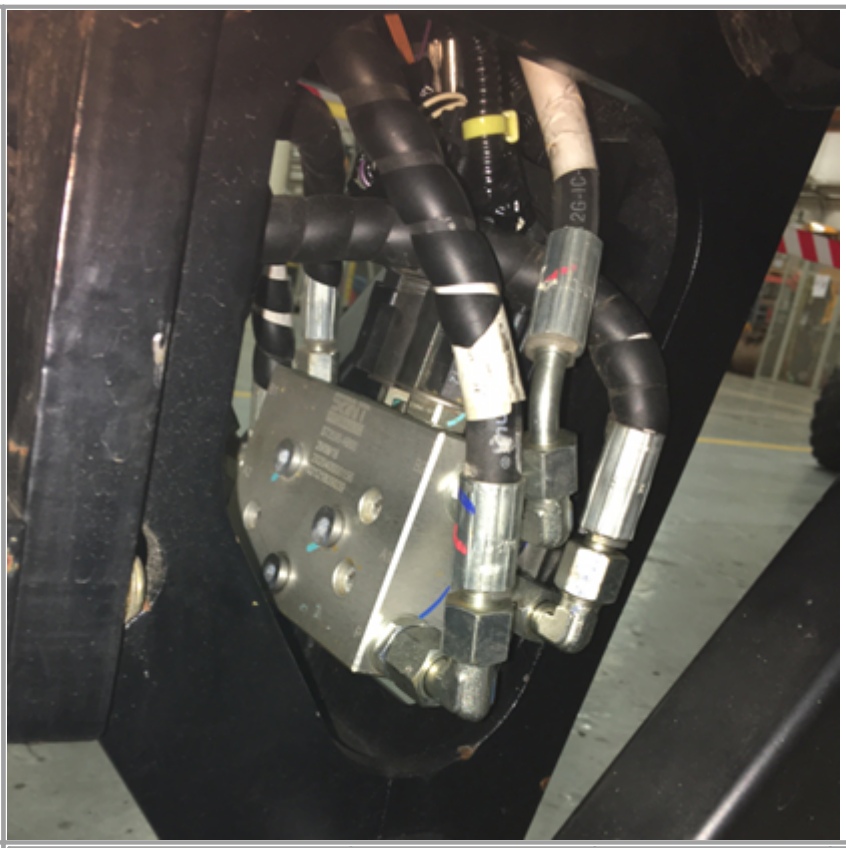

Signal:

Solenoid	Pin Number	Description	Wire Numb Harnes
Platform Rotate Right	1	Feed	4083
Platform Rotate Right	2	GND	6083
Platform Rotate Left	1	Feed	4084
Platform Rotate Left	2	GND	6084
Jib Down	1	Feed	4081
Jib Down	2	GND	6081
Jib Up	1	Feed	4082

© 2026 JCB INDIA LTD

	Jib Up	2	GND	6082

Wires & Connectors :

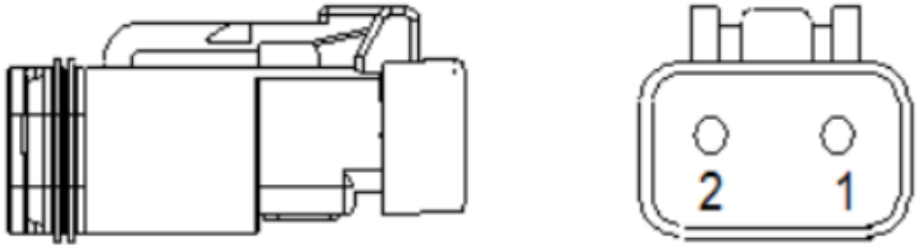

Internal Electrical Schematic:

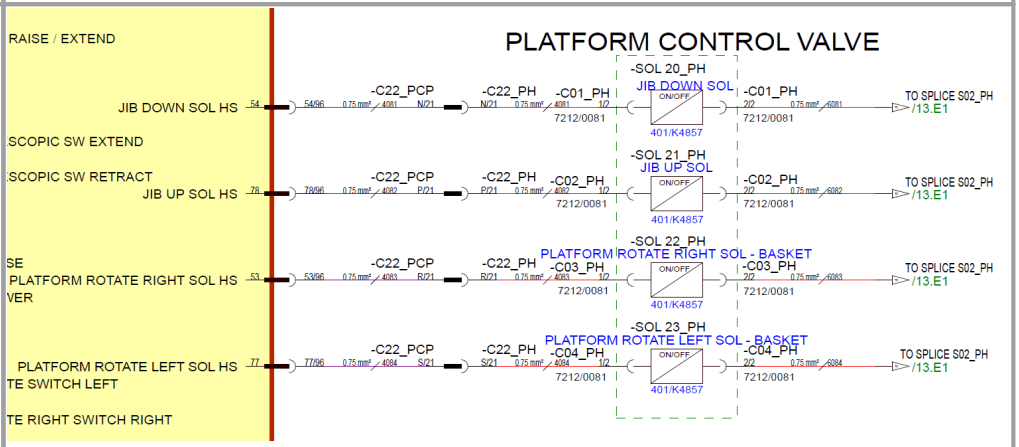

Testing:

Important: Use the multi-meter on the harness connector pins. DO NOT USE the meter on the ECU pins..

1. Using a solenoid pen, check to see if the solenoid is powered when the function is in use.

2. If the solenoid pen shows no power, disconnect the harness from the solenoid.

© 2026 JCB INDIA LTD

	3. Check the resistance across the solenoid. The reading should as per specification as mentioned in below table 4. If readings are incorrect, replace the solenoid. If correct disconnect the harness at the ECU and check harness continuity, repair/replace if necessary 5. If the harness continuity is OK, replace the solenoid
Expected Values:	12V
Related Fault Codes:	**Fault Code** / **Fault Description** B1329-13 874 — Jib boom / Platform rotate flow solenoid - Circuit open or short to high (12v) B1330-16 876 — Jib boom / Platform rotate flow solenoid - Circuit short to low

4.25 Weight Sensor



Components 134 > Weight Sensor

© 2026 JCB INDIA LTD

Component :	Weight Sensor
Function:	•The load cell is to understand the load in the platform. •This is 2 channel and is part of the machines safety functions
Location:	The load cell is located near the platform control station
Location Image:	 
Signal:	

Sensor 1			
Pin Number	**Description**	**Wire number**	**Colour**
A	12V Feed	1030A	red

© 2026 JCB INDIA LTD

	B	Signal output (4-20mA)	4101	green
	C	GND	6070B	black
	Sensor 2			
	Pin Number	**Description**	**Wire number**	**Colour**
	A	12V Feed	1030B	Red
	B	Signal output (4-20mA)	4102	Green
	C	GND	6070A	Black
Wires & Connectors :	Harness side connectors Sensor side connector			

© 2026 JCB INDIA LTD

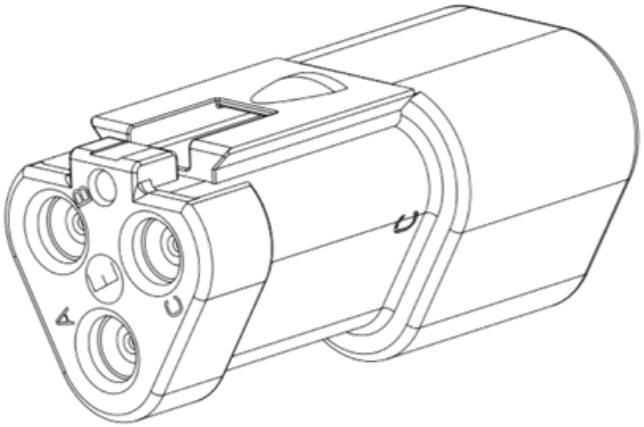

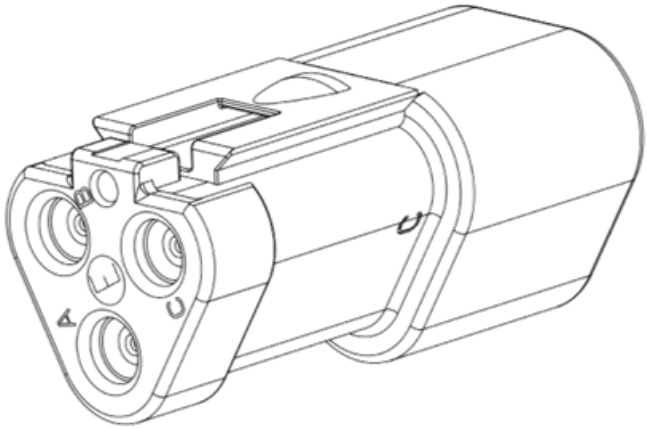

Internal

Electrical

Schematic:

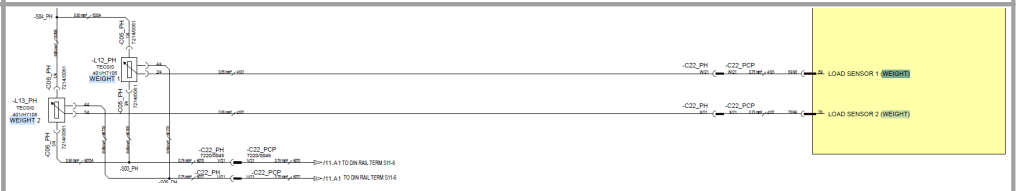

Testing:

Important: Use the multi-meter on the harness connector pins. DO NOT USE the meter on the ECU pins.

© 2026 JCB INDIA LTD

1. The weight sensor fitted on machine have two channels

2. Double channel load cell which is fitted at the point the platform is connected.

3. Each channel is connected with 3 Pins A for power supply (12V) Pin C for ground Pin B for output (analogue)

4. Make sure assembly of load cell is done as per SOP mentioned below (143/E0110)

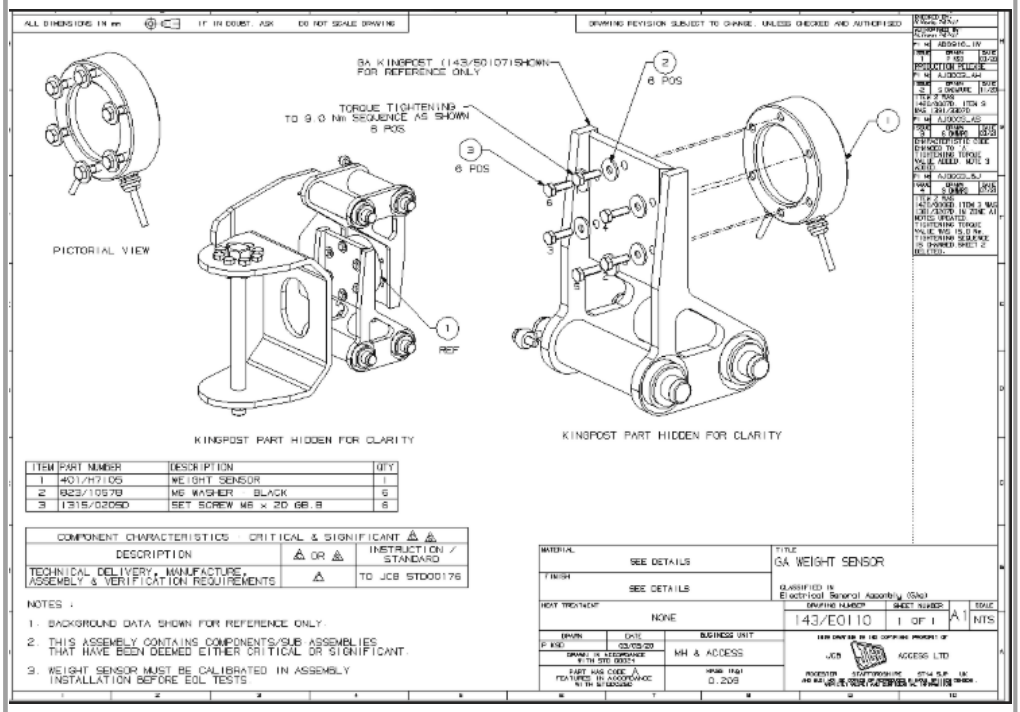

5 Check the current shown at both the channel out put it should be more then 4000 mAmp (with platform connected)

© 2026 JCB INDIA LTD

6 If any channel showing less then 4000 mAmp check the assembly tightening of weight cell,

7 If still issues persists check the load cell bracket flatness (should be within tolerance as mentioned in drawings)

8 Check the voltage at Pin A (should read 12V) if no voltage need to investigate as per schemetic

9 If voltage is there & no out put then it might be the internal damage to components , replace the load cell

Load Cell Troubleshooting Flow Chart

© 2026 JCB INDIA LTD

Expected Values:	12V
Related Fault Codes:	**Fault Code** / **Fault Description** B1221-17 769 — Overload sensor 1 - Out of range (High) B1222-16 772 — Overload sensor 1 - Circuit open or out of range (Low) B1223-17 774 — Overload sensor 2 - Out of range (High) B1224-16 776 — Overload sensor 2 - Circuit open or out of range (Low) B1225-27 778 — Overload sensor - Signal erratic B1541-13 906 — Weight sensor - No Calibration data available for Load Cell.

4.26 DC Contactor

DC Contactor

Components 134 > DC Contactor

Component:	DC Contactor
Function:	•The DC Contactor is used as a large relay to turn power on and off to the electric pump. The contactor is controlled via the bosch base ecu.

© 2026 JCB INDIA LTD

	•The electric pump will not work when the engine is running.
Location:	On Chassis Rear RHS
Location Image:	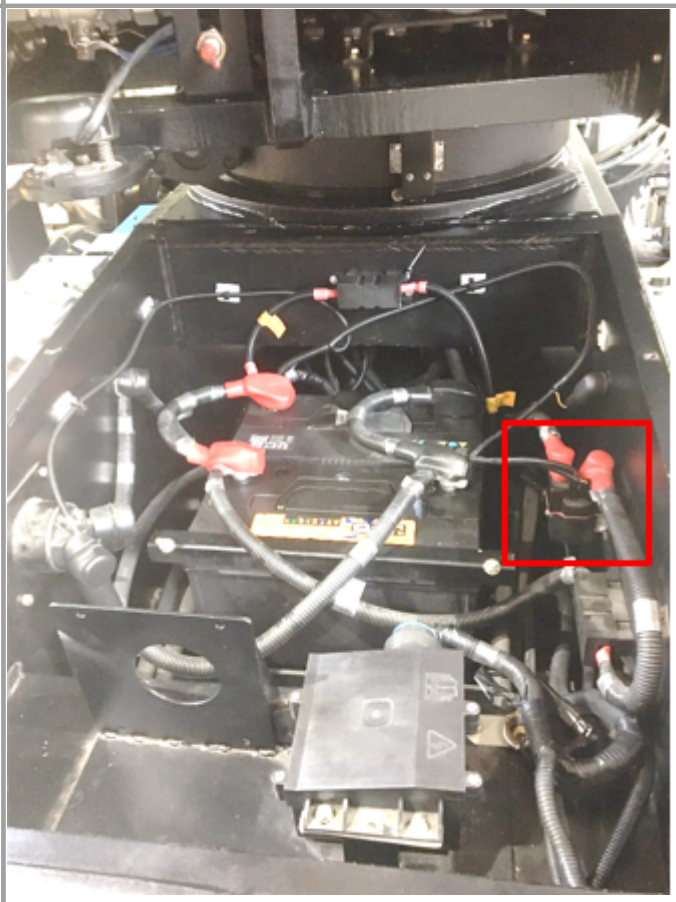 

© 2026 JCB INDIA LTD

<table>
<tr><td>Signal:</td><td>
<table>
<tr><td>Contacts</td><td></td><td></td></tr>
<tr><td>Terminal</td><td>From/ To</td><td>Cable details</td></tr>
<tr><td>Input</td><td>Battery Lead from Primary Fuse PF01</td><td>Red 50mm2 Battery cable</td></tr>
<tr><td>Output</td><td>To hydraulic motor Positive terminal</td><td>Red 50mm2 Battery cable</td></tr>
<tr><td></td><td></td><td></td></tr>
<tr><td>Coil</td><td></td><td></td></tr>
<tr><td>Terminal</td><td>Description</td><td>Wire number</td></tr>
<tr><td>+VE</td><td>Bosch Base ECU pin 93/96</td><td>4025</td></tr>
<tr><td>-VE</td><td>Chassis GND terminal</td><td>6067</td></tr>
</table>
Always be careful when fitting the coil terminals. If they are fitted the wrong way around the diode will blow across the front of the terminals and the part will not work.
</td></tr>
<tr><td>Wires & Connectors</td><td>M8-50mm ring terminals are used for contact terminals 6.3 pos-lock terminals are used on the coil terminals. Always ensure fully insulated</td></tr>
</table>

© 2026 JCB INDIA LTD

:	 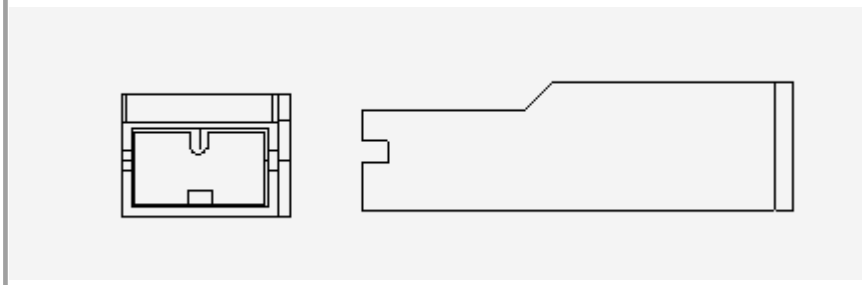
Internal **Electrical** **Schematic:**	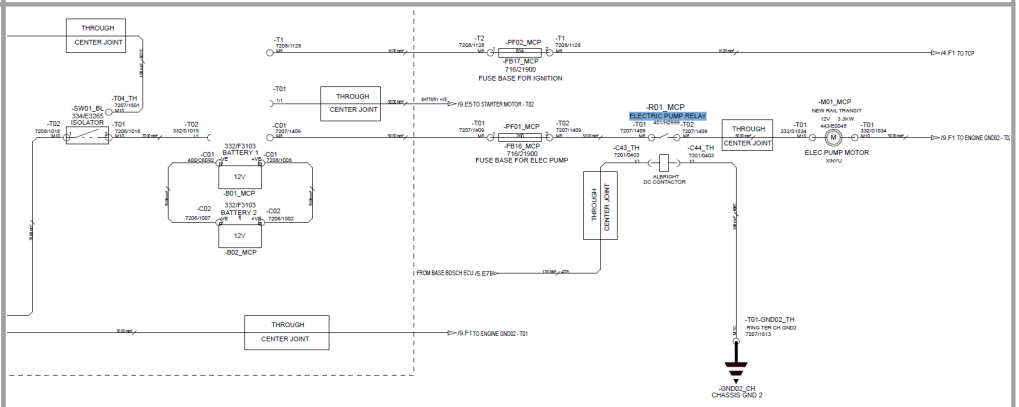
Testing:	Important: Use the multi-meter on the harness connector pins. DO NOT USE the meter on the ECU pins. 1. Set a multimeter to continuity 2. apply terminals to contact terminals of the contactor 3. This should show open circuit. 4. Apply 12V to positive coil terminal and 0V to gnd terminal

© 2026 JCB INDIA LTD

	5. Check continuity across the contact terminals. with 12V and GND applied to coil there should be continuity
Expected Values:	12V
Related Fault Codes:	N/A

4.27 Tilt Sensor



Components 134 > Tilt Sensor

Component :	Tilt Sensor

© 2026 JCB INDIA LTD

<table>
<tr><td>Function:</td><td>•The tilt sensor is so the machine can understand the inclination of the machine.
•The AJ48D tilt sensor will be open circuit when the inclination reaches >5° in the X or Y axis.</td></tr>
<tr><td>Location:</td><td>On Turntable</td></tr>
<tr><td>Location Image:</td><td>  </td></tr>
<tr><td>Signal:</td><td>
<table>
<tr><th>Pin Number</th><th>Description</th><th>Wire Number</th></tr>
<tr><td>A</td><td>12V feed</td><td>1008</td></tr>
<tr><td>B</td><td>Output Signal</td><td>4022</td></tr>
<tr><td>C</td><td>GND</td><td>6010</td></tr>
</table>
</td></tr>
</table>

© 2026 JCB INDIA LTD

Wires & Connectors :	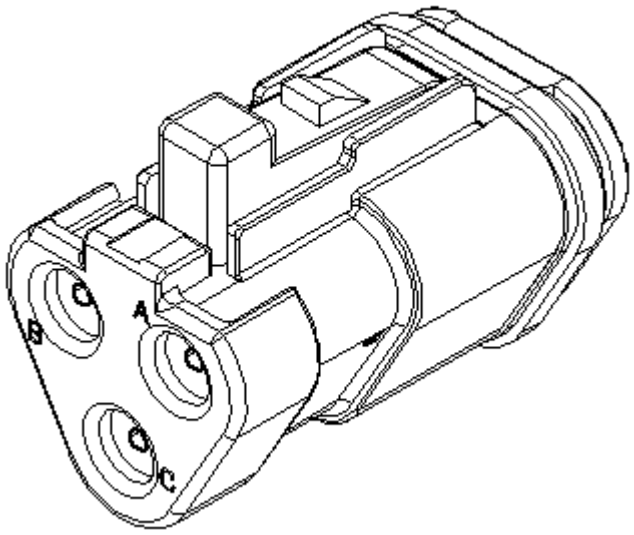
Internal Electrical Schematic:	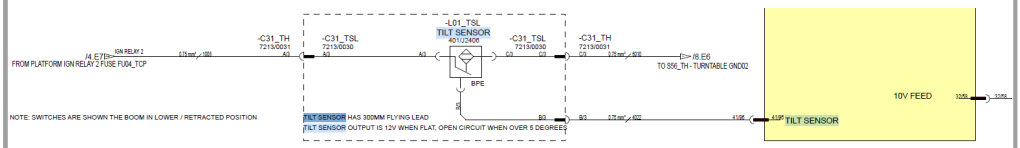
Testing:	Important: Use the multi-meter on the harness connector pins. DO NOT use the meter on the ECU pins. 1. Check the tilt angle of the chassis with a level gauge 2. Re-set tilt sensor at zero degree position. Refer to the Service Manual 3. Drive the machine 5° level & check the tilt alarm icon at display & tilt alarm LED at platform

© 2026 JCB INDIA LTD

	4. If machine is stow mode it will allow all operation but if the machine is in raised mode it would not allow raise & drive operation 5. Check the voltage at Pin A (should read 12V) if no voltage need to investigate as per schemetic 6. If voltage is there & no out put then it might be the internal damage to components , replace the tilt censor. **Calibration** 1. Ensure the machine is made safe on flat level ground in both X and Y axis. 2. Turn on machine ignition 3. Below the tilt sensor there is a red lead 4. Use lead number 400/J2673 5. Connect crocodile clip side to the battery positive 6.press the terminal into the red lead below tilt sensor for between 3 - 7 seconds and remove 7. Below the tilt sensor there will be a green light that flashes very quickly to show the calibration has been accepted.

© 2026 JCB INDIA LTD

Expected Values:	12V
Related Fault Codes:	**Fault Code** / **Fault Description** B1017-17 559 — TILT Sensor SC to High (not possible to detect until sensor connected to 10V) B1018-16 560 — Tilt Sensor short circuit to low

4.28 Slew Limit Switch



Components 134 > Slew Limit Switch

Component:	Slew Limit Switch
Function:	•The Slew position limit sensor is to understand the slew position of the machine and operator.

© 2026 JCB INDIA LTD

	•As the machine is slewed round out of the forward position, the machine will pause any drive condition until the operator has pressed the slew acknowledgment switch. This is so the operator is sure of the direction that the machine will operate in.
Location:	On Turntable
Location Image:	
Signal:	

Pin Number	Description	Wire Number
A	10V feed	1046D

© 2026 JCB INDIA LTD

	B	Input Signal	4020
	C	Input Signal	4021

Wires & Connectors :

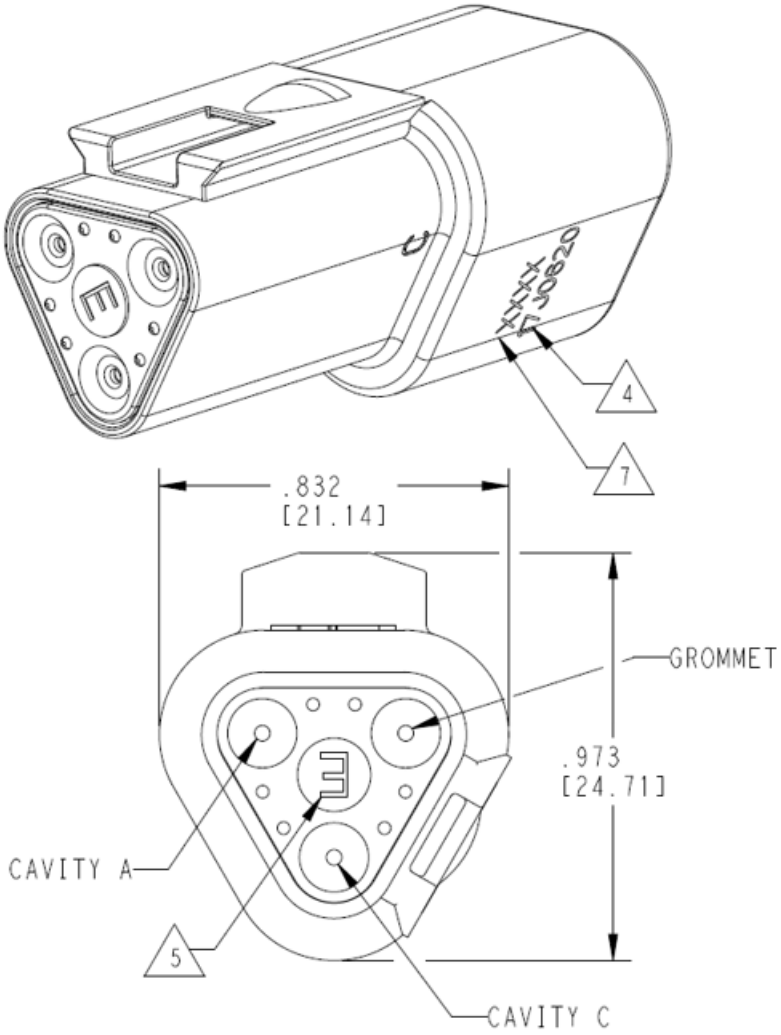

Internal Electrical

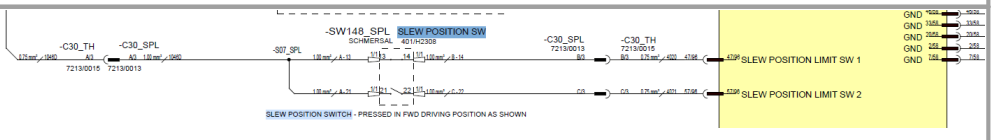

© 2026 JCB INDIA LTD

Schematic:	
Testing:	Check Continuity on contact block terminal.
Expected Values:	12V
Related Fault Codes:	

Fault Code	Fault Description
B1019-17 562	Slew position switch 1 - Circuit short to high (12v)
B1020-17 563	Slew position switch 2 - Circuit short to high (12v)
B1021-16 564	Slew position switch 1 - Circuit short to low
B1022-13 566	Slew position switch - Signal plausibility failure (Circuit open)
B1023-16 567	Slew position switch 2 - Circuit short to low
B1024-92 568	Slew position switch - Signal plausibility failure (12v)

4.29 Main Valve Block



Components 134 > Main Valve Block

© 2026 JCB INDIA LTD

Component :	Main Valve Block
Function:	The main valve block is used to control the hydraulic flow around the machine.
Location:	On Turntable near Fuel Tank
Location Image:	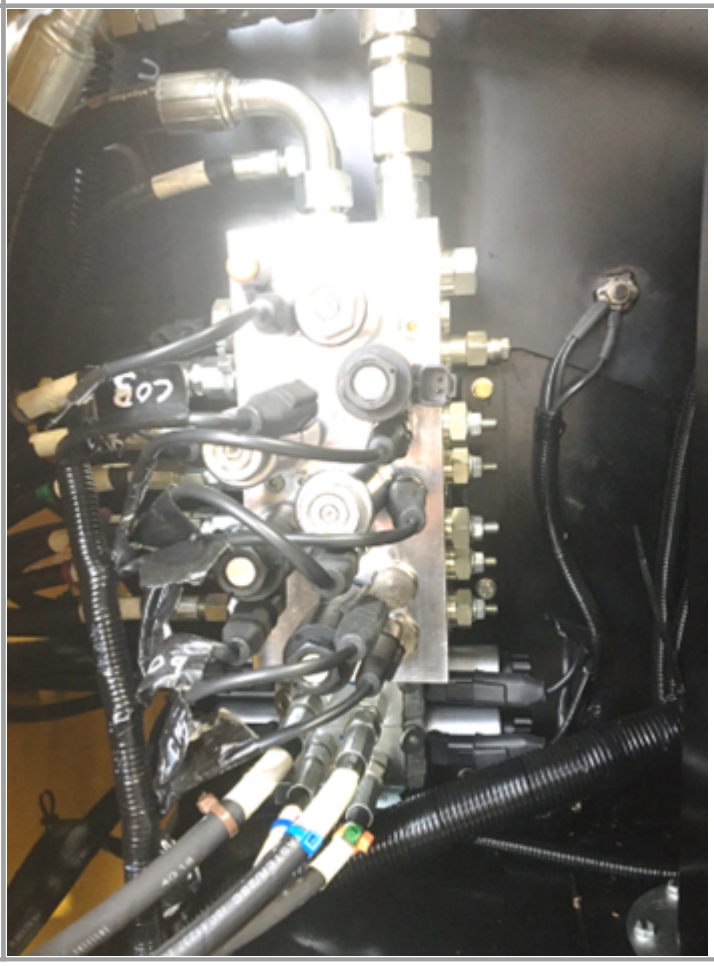

© 2026 JCB INDIA LTD

Signal:

C01_TH Articboom lower			
Pin Number	**Description**	**Wire Harness Numbers**	**Pin Number on ECU**
1	Artic boom lower	4043	77/96
2	Shared low side with Artic boom raise	4044B	88/96
C02_TH Articboom raise			
Pin Number	**Description**	**Wire Harness Numbers**	**Pin Number on ECU**
1	Artic boom raise	4042	53/96
2	Shared low side with Artic boom lower	4044C	88/96
C03_TH Main boom Telescopic Retract			
Pin Number	**Description**	**Wire Harness Numbers**	**Pin Number on ECU**
1	telescopic retract	4049	75/96

© 2026 JCB INDIA LTD

2	Shared low side with telescopic extend	4050B	85/96
C04_TH Main boom telescopic Extend			
Pin Number	**Description**	**Wire Harness Numbers**	**Pin Number on ECU**
1	telescopic extend	4048	51/96
2	Shared low side with telescopic retract	4050C	85/96
C05_TH Main boom raise			
Pin Number	**Description**	**Wire Harness Numbers**	**Pin Number on ECU**
1	main boom lower	4045	54/96
2	Shared low side with main boom raise	4047C	84/96
C06_TH Main boom lower			

© 2026 JCB INDIA LTD

Pin Number	Description	Wire Harness Numbers	Pin Number on ECU
1	main boom lower	4046	78/96
2	Shared low side with main boom raise	4047B	84/96
C07_TH Slew left proportional			
Pin Number	**Description**	**Wire Harness Numbers**	**Pin Number on ECU**
1	Steer left	4054	73/96
2	Shared low side with right proportional	4056C	87/96
C08_TH Slew right proportional			
Pin Number	**Description**	**Wire Harness Numbers**	**Pin Number on ECU**
1	Steer left	4055	49/96
2	Shared low side with left proportional	4056B	87/96

© 2026 JCB INDIA LTD

C09_TH Steer Left			
Pin Number	**Description**	**Wire Harness Numbers**	**Pin Number on ECU**
1	Steer left	4051	74/96
2	Shared low side with Steer right	4053C	80/96
C10_TH Steer Right			
Pin Number	**Description**	**Wire Harness Numbers**	**Pin Number on ECU**
1	Steer right	4052	50/96
2	Shared low side with Steer left	4053B	80/96
C11_TH Public proportional			
Pin Number	**Description**	**Wire Harness Numbers**	**Pin Number on ECU**
1	High Side	4057	30/96

© 2026 JCB INDIA LTD

2	Lowside	4058	81/96
C13_TH Lift & Slew flow valve			
Pin Number	**Description**	**Wire Harness Numbers**	**Pin Number on ECU**
1	lift and slew flow	4062	1/96
2	GND	6062	GND
C14_TH Platform level raise			
Pin Number	**Description**	**Wire Harness Numbers**	**Pin Number on ECU**
1	Level Raise	4059	3/96
2	GND	6059	GND
C15_TH Platform level lower			
Pin Number	**Description**	**Wire Harness Numbers**	**Pin Number on ECU**
1	Level lower	4060	57/58
2	GND	6060	GND

© 2026 JCB INDIA LTD

	C16_TH Platform rotate/jib flow valve			
	Pin Number	**Description**	**Wire Harness Numbers**	**Pin Number on ECU**
	1	Platform flow valve	4061	7/96
	2	GND	6061	GND
Wires & Connectors :	The image below shows a Deutsch 2 way connector. This is used for each solenoid on the valve block. 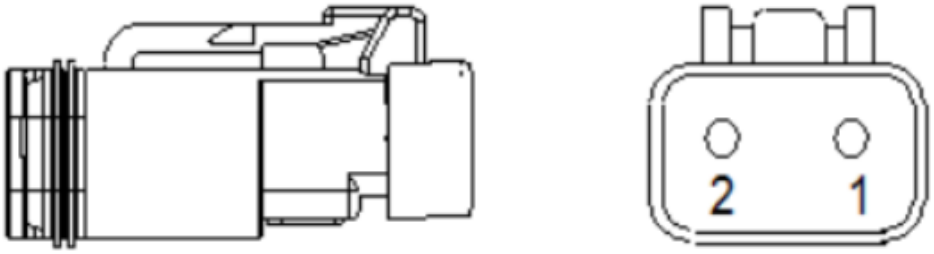			

© 2026 JCB INDIA LTD

Internal

Electrical

Schematic:

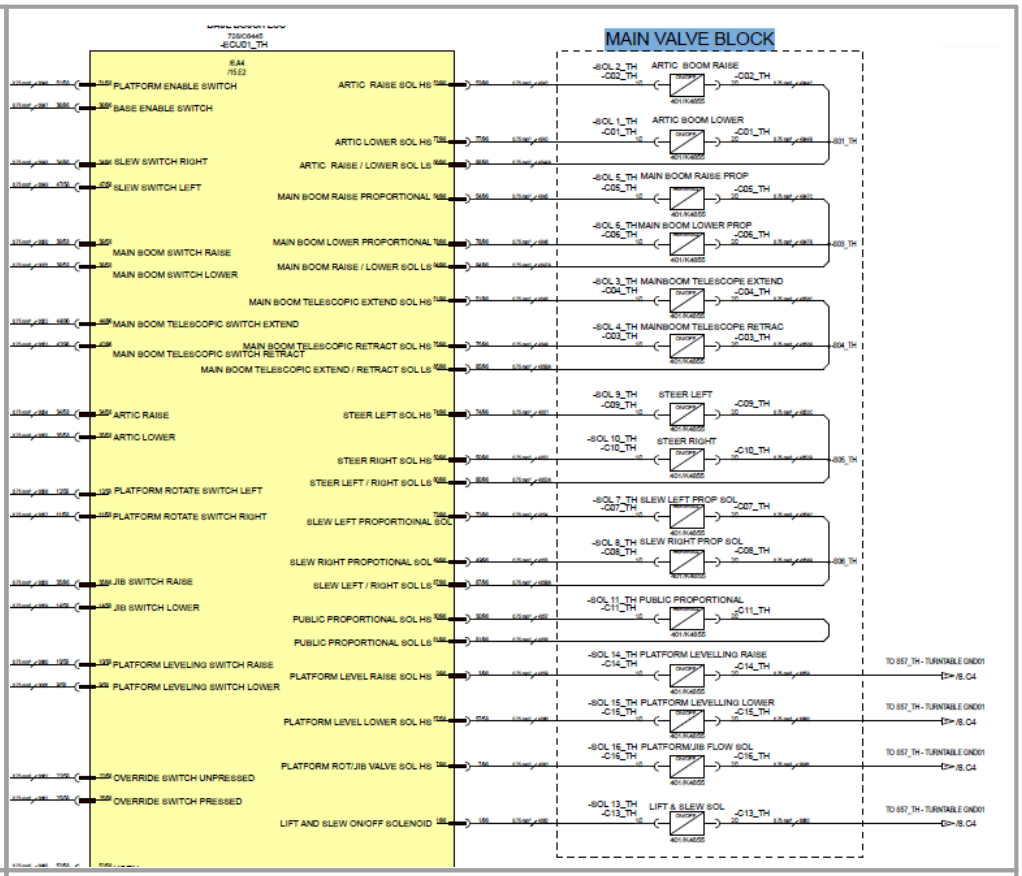

Testing:

Important: Use the multi-meter on the harness connector pins. DO NOT USE the meter on the ECU pins.

1. Using a solenoid pen, check to see if the solenoid is powered when the function is in use.

2. If the solenoid pen shows no power, disconnect the harness from the solenoid.

3. Check the resistance across the solenoid. The reading should as per specification as mentioned in below table

© 2026 JCB INDIA LTD

4. If readings are incorrect, replace the solenoid. If correct disconnect the harness at the ECU and check harness continuity, repair/replace if necessary

5. If the harness continuity is OK, replace the solenoid.

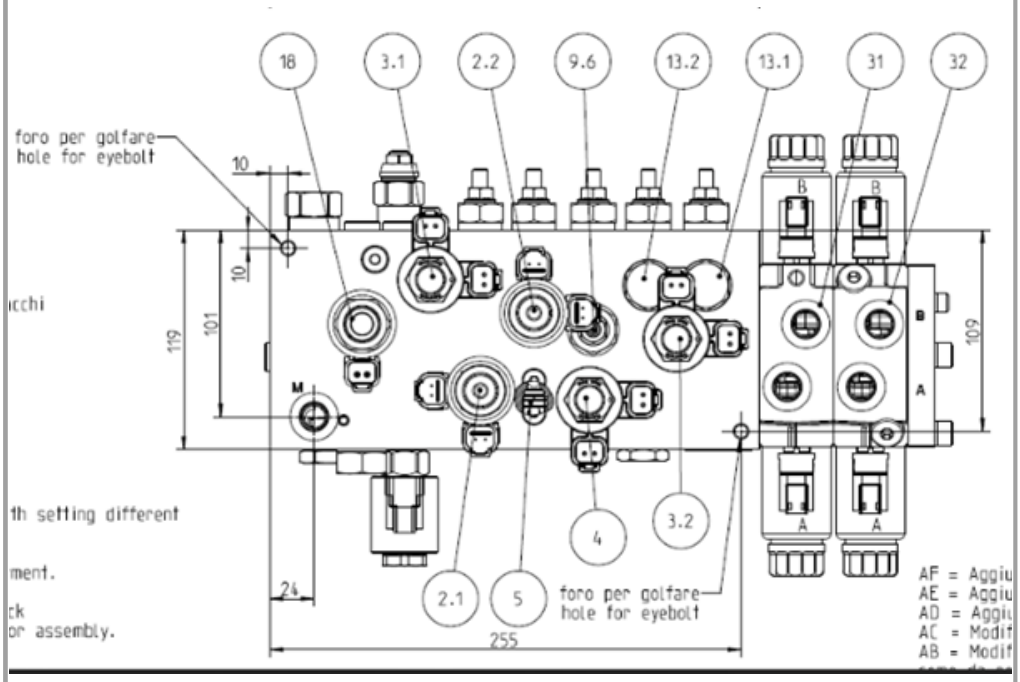

© 2026 JCB INDIA LTD

"ETICHETTA NP169"

ELECTRICAL CHARACTERISTICS COIL POS: 31 - 32	
Connections	DEUTSCH DT 04-2PA
Voltage	12V ±15%
Coils Protection	IP69K
Insulation Class of Coil	H 180°C (356°F)
Current	Imax 1760 mA
Resistance at 20°C (68°F)	3.71 Ohm ±7%

ELECTRICAL CHARACTERISTICS COIL POS: 18	
Connections	DEUTSCH DT 04-2PA
Voltage	12V ±15%
Coils Protection	IP69K
Insulation Class of Coil	H 180°C (356°F)
Ambient temperature range	-40°C / +110°C (-40°F / +230 °F)
Current	Imax 1760 mA
Resistance at 20°C (68°F)	2.3 Ohm ±5%

ELECTRICAL CHARACTERISTICS COIL POS NO: 2.1 - 2.2	
Connections	DT04-2PA DEUTSCH
Voltage	12V ±10%
Coils Protection	IP69K
Circuit	Standard
Insulation Class of Coil	H 180°C (356°F)
Ambient temperature range	-40°C / +110°C (-40°F / +230 °F)
Power	22 W
Resistance at 20°C (68°F)	6.4 Ohm ±5%

Expected Values:

See Signal

Related Fault Codes:

Fault Code	Fault Description
B1036-17 581	Public proportional output solenoid short circuit to high (>10.5V)
B1037-16 582	Public proportional output solenoid short circuit to low
B1038-13 583	PUBLIC Proportional Solenoid Valve High Side & Low Side Open Circuit
B1039-17 584	PLATFORM LEVELING DIRECTIONAL Solenoid Valve Raise High Side Short Circuit to High OR Open Circuit
B1040-16 585	DIRECTIONAL Solenoid Valve Raise High Side Short Circuit to Low

© 2026 JCB INDIA LTD

B1041 -17 586	PLATFORM LEVELING DIRECTIONAL Solenoid Valve Lower High Side Short Circuit to High OR Open Circuit
B1042 -16 587	PLATFORM LEVELING DIRECTIONAL Solenoid Valve Lower High Side Short Circuit to Low
B1043 -17 588	Oscillating axle solenoid high side - Circuit short to high (12v)
B1044 -16 589	Oscillating axle solenoid high side - Circuit short to low
B1045 -13 590	Oscillating axle solenoid high - Circuit open
B1076 -17 623	Main boom solenoid high side both functions - Circuit short to high (12v)
B1077 -16 624	Main boom solenoid high side both functions - Circuit short to low
B1078 -13 625	Main boom solenoid high side both functions - Circuit open
B1079 -17 626	Main boom solenoid both functions - Valve fault
B1080 -17 627	Slew solenoid high side both functions - Circuit short to high (12v)
B1081 -16 628	Slew solenoid high side both functions - Circuit short to low
B1082 -13 628	Slew solenoid high side both functions - Circuit open
B1083 -17 630	Slew solenoid both functions - Valve fault.
B1084 -17 630	MAIN BOOM EXTEND OR RETRACT DIRECTIONAL Solenoid Valve High Side Short Circuit to High OR Short Circuit
B1086 -13 631	MAIN BOOM EXTEND OR RETRACT DIRECTIONAL Solenoid Valve High Side & Low Side Open Circuit
B1087 -17 632	MAIN BOOM EXTEND OR RETRACT DIRECTIONAL Solenoid Valve Fault
B1088 -17 633	Steer solenoid high side both functions - Circuit short to high (12v)
B1089 -16 634	Steer solenoid high side both functions - Circuit short to low
B1090 -13 634	Steer solenoid high side and low side both functions - Circuit open
B1091 -17 635	Steer solenoid both functions - Valve fault
B1092 -17 636	ARTICULATED BOOM RAISE OR LOWER DIRECTIONAL Solenoid Valve High Side Short Circuit to High
B1093 -16 637	ARTICULATED BOOM RAISE OR LOWER DIRECTIONAL Solenoid Valve High Side Short Circuit to Low
B1094 -13 638	ARTICULATED BOOM RAISE OR LOWER DIRECTIONAL Solenoid Valve High Side & Low Side Open Circuit
B1095 -92 639	ARTICULATED BOOM RAISE OR LOWER DIRECTIONAL Solenoid Valve Fault

© 2026 JCB INDIA LTD

B1133-17 690	JIB/PLATFORM FLOW High Side Solenoid Short Circuit to High
B1134-14 691	JIB/PLATFORM FLOW High Side Solenoid Short Circuit to Low
B1167-13 713	Platform rotate solenoid left function - Circuit open or short to high (12v)
B1168-16 714	Platform rotate solenoid left function - Circuit short to low
B1169-13 715	Platform rotate solenoid right function - Circuit open or short to high (12v)
B1170-16 716	Platform rotate solenoid right function - Circuit short to low
B1171-13 717	Jib boom solenoid raise function - Circuit open or short to high (12v)
B1172-16 718	Jib boom solenoid raise function - Circuit short to low
B1173-13 719	Jib boom solenoid lower function - Circuit open or short to high (12v)
B1174-16 720	Jib boom solenoid lower function - Circuit open or short to low
B1175-13 721	BOOM LIFT/SLEW DIRECTIONAL Solenoid Valve Short Circuit to High or Open Circuit
B1176-16 722	MAIN BOOM LIFT/SLEW DIRECTIONAL Solenoid Valve Short Circuit to Low
B1329-13 874	Jib boom / Platform rotate flow solenoid - Circuit open or short to high (12v)
B1330-16 876	Jib boom / Platform rotate flow solenoid - Circuit short to low
B1332-17 879	PUBLIC Proportional Solenoid Valve Low Side Short Circuit to High
B1333-16 879	PUBLIC Proportional Solenoid Valve Low Side Short Circuit to Low
B1334-13 880	PUBLIC Proportional Solenoid Valve Fault
B1335-17 881	Main boom solenoid low side both functions - Circuit short to high (12v)
B1336-16 883	Main boom solenoid low side both functions - Circuit short to low
B1337-13 884	Main boom solenoid low side both functions - Circuit open
B1338-17 885	Slew solenoid low side both functions - Circuit short to high (12v)
B1339-16 887	Slew solenoid low side both functions - Circuit short to low
B1340-13 888	Slew solenoid low side both functions - Circuit open
B1341-17 890	MAIN BOOM EXTEND OR RETRACT DIRECTIONAL Solenoid Valve Low Side Short Circuit to High

© 2026 JCB INDIA LTD

B1342-16 890	TEND OR RETRACT DIRECTIONAL Solenoid Valve Low Side Short Circuit to Low
B1344-17 891	Steer solenoid low side both functions - Circuit short to high (12v)
B1345-16 892	Steer solenoid low side both functions - Circuit short to low
B1347-17 893	Oscillating axle solenoid low side - Circuit short to high (12v)
B1348-16 895	Oscillating axle solenoid low side - Circuit short to low
B1349-13 896	Oscillating axle solenoid - Valve fault
B1350-17 898	ARTICULATED BOOM RAISE OR LOWER DIRECTIONAL Solenoid Valve Low Side Short Circuit to High
B1351-16 899	ARTICULATED BOOM RAISE OR LOWER DIRECTIONAL Solenoid Valve Low Side Short Circuit to Low
B1355-16 902	Hydraulic Generator - Solenoid - Circuit short to low
B1356-13 903	Hydraulic Generator - Solenoid high side - Circuit open or short to high (12v)

4.30 Brake Valve Block

Brake Valve Block

Components 134 > Brake Valve Block

Component :	Brake Valve Block
Function:	•This valve is necessary for optimizing front-to-rear bias, also referred to as brake balance. It is a spring-loaded component that activates when fluid pressure builds when you step on the brake pedal.

© 2026 JCB INDIA LTD

	•Once this happens, the spring gets compressed and the plunger blocks the fluid from passing through.
Location:	On Chassis Front side RHS

© 2026 JCB INDIA LTD

Location **Image:**	 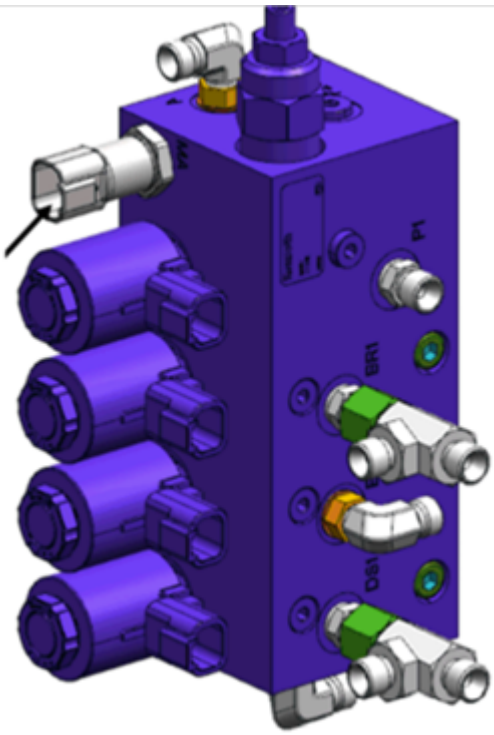

© 2026 JCB INDIA LTD

Signal:

AXLE LOCK:		
Pin Number	**Description**	**Wire Numbers**
1	AXLE LOCK SOL HS	4037
2	AXLE LOCK SOL LS	4038
REAR BRAKE SOL:		
Pin Number	**Description**	**Wire Numbers**
1	REAR BRAKE SOLENOID	4039
2	GND	6039
FRONT BRAKE SOL:		
Pin Number	**Description**	**Wire Numbers**
1	FRONT BRAKE SOLENOID	4063
2	GND	6063
HIGH TORQUE SOL:		
Pin Number	**Description**	**Wire Numbers**
1	HIGH TORQUE SOLENOID	4040

© 2026 JCB INDIA LTD

	2	GND	6040
	HYDRAULIC GENERATOR 1:		
	Pin Number	**Description**	**Wire Numbers**
	1	HYDRAULIC GENERATOR SOLENOID HS	4041
	2	GND	6041
Wires & Connectors :	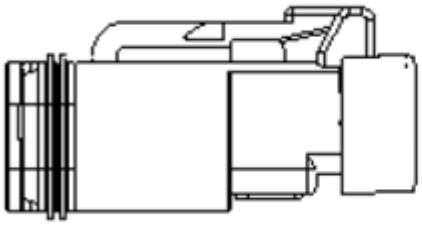 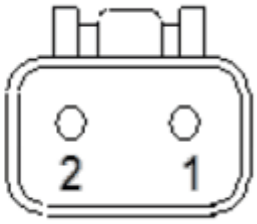		
Internal Electrical Schematic:	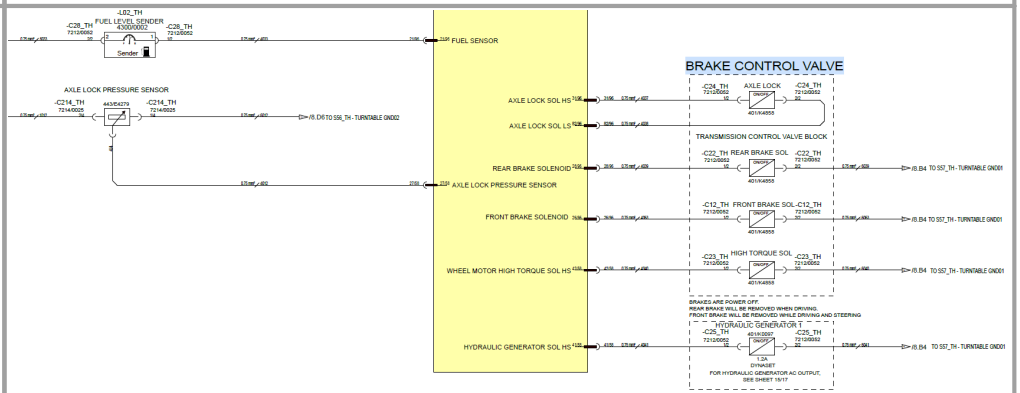		

© 2026 JCB INDIA LTD

Testing:

Important: Use the multi-meter on the harness connector pins. DO NOT USE the meter on the ECU pins.

1. Using a solenoid pen, check to see if the solenoid is powered when the function is in use.

2. If the solenoid pen shows no power, disconnect the harness from the solenoid.

3. Check the resistance across the solenoid. The reading should as per specification as mentioned in below table

4. If readings are incorrect, replace the solenoid. If correct disconnect the harness at the ECU and check harness continuity, repair/replace if necessary

5. If the harness continuity is OK, replace the solenoid.

ELECTRICAL CHARACTERISTICS COIL POS NO: 3.1 - 3.2 - 4 - 30	
Connections	DEUTSCH DT04-2P-V
Voltage	12V +25%-10% at 60°C (140°F)
Coils Protection	IP69K
Circuit	Bidirectional Diode
Insulation Class of Coil	H 180°C (356°F)
Ambient temperature range	-90°C / +90°C (-22°F / +194 °F)
Current	Max 1.67 A - Norm 1.04 A
Power	20 W
Resistance at 20°C (68°F)	7.4 Ohm ±7%

© 2026 JCB INDIA LTD

Expected Values:	12V
Related Fault Codes:	**Fault Code** / **Fault Description** B1048-17 593 — FRONT BRAKE Solenoid Valve SC to High or OC B1049-16 595 — FRONT BRAKE Solenoid Valve Raise SC to Low B1278-17 834 — REAR BRAKE Solenoid Valve SC to High or OC B1279-16 836 — REAR BRAKE Solenoid Valve Raise SC to Low

4.31 Electric Pump

Electric Pump

Components 134 > Electric Pump

Component:	Electric Pump
Function:	Electric pump is used in case of emergency to get the basket down when the primary supply (Engine) fails.

© 2026 JCB INDIA LTD

<table>
<tr><td>Location:</td><td>On Turntable rear side</td></tr>
<tr><td>Location

Image:</td><td> 
 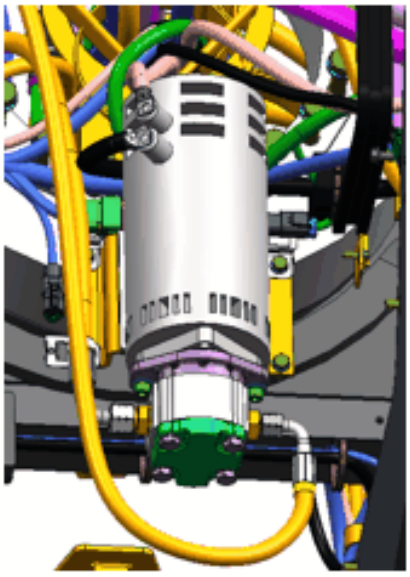 </td></tr>
<tr><td>Signal:</td><td>
<table>
<tr><th>Pin</th><th>Battery Cable

Connected to</th></tr>
<tr><td>+VE</td><td>Red</td></tr>
<tr><td>-VE</td><td>Black</td></tr>
</table>
</td></tr>
</table>

© 2026 JCB INDIA LTD

Wires & Connectors :	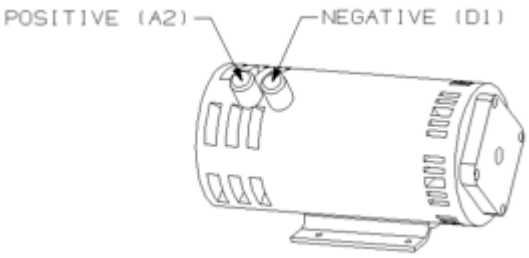
Internal Electrical Schematic:	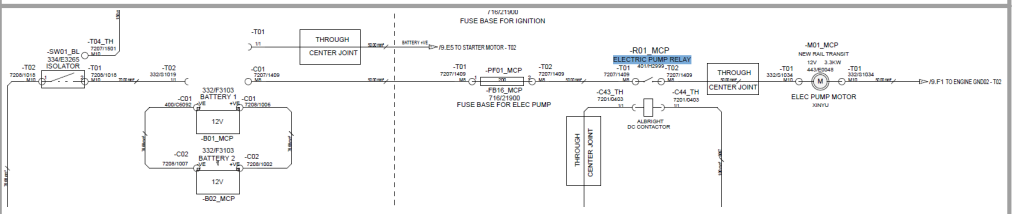
Testing:	Important: Use the multi-meter on the harness connector pins. DO NOT USE the meter on the ECU pins. 1.There is a 3.3KW DC motor fitted inside turntable. 2.Check the terminal properly connected at motor . Red (positive) cable should be connected at A2 & Black (negative) cable should be connected at B1 3.Visually inspect the motor winding, bushes & commutator 4.Check the voltage at DC contactor power contacts. This should read 12V

© 2026 JCB INDIA LTD

	5.If there is no 12V then check DC contactor coil supply & investigate wiring as schematic 6.If there is 12V supply then there may be internal damage to motor , replace it.
Expected Values:	12V
Related Fault Codes:	

Fault Code	Description
B1055-17 602	AUX / Overload override button pressed condition - Circuit short to high (10v)
B1056-16 603	AUX / Overload override button pressed condition - Circuit short to low
B1694-17 911	AUX / Overload override button unpressed condition - Circuit short to high (10v)
B1695-16 912	AUX / Overload override button unpressed condition - Circuit short to low
B1696-13 913	AUX / Overload override button both conditions - Signal plausibility failure (Circuit open)
B1697-92 914	AUX / Overload override button both conditions - Signal plausibility failure (10v)

4.32 Hydraulic Generator



Components 134 > Hydraulic Generator

© 2026 JCB INDIA LTD

Component :	Hydraulic Generator
Function:	•The hydraulic generator is to provide power to the platform. •There will be different variants of the same generator based on country and supply voltage. 1. 110V USA Supply 2. 230V ROW Supply
Location:	On Chassis LHS

© 2026 JCB INDIA LTD

Location

Image:



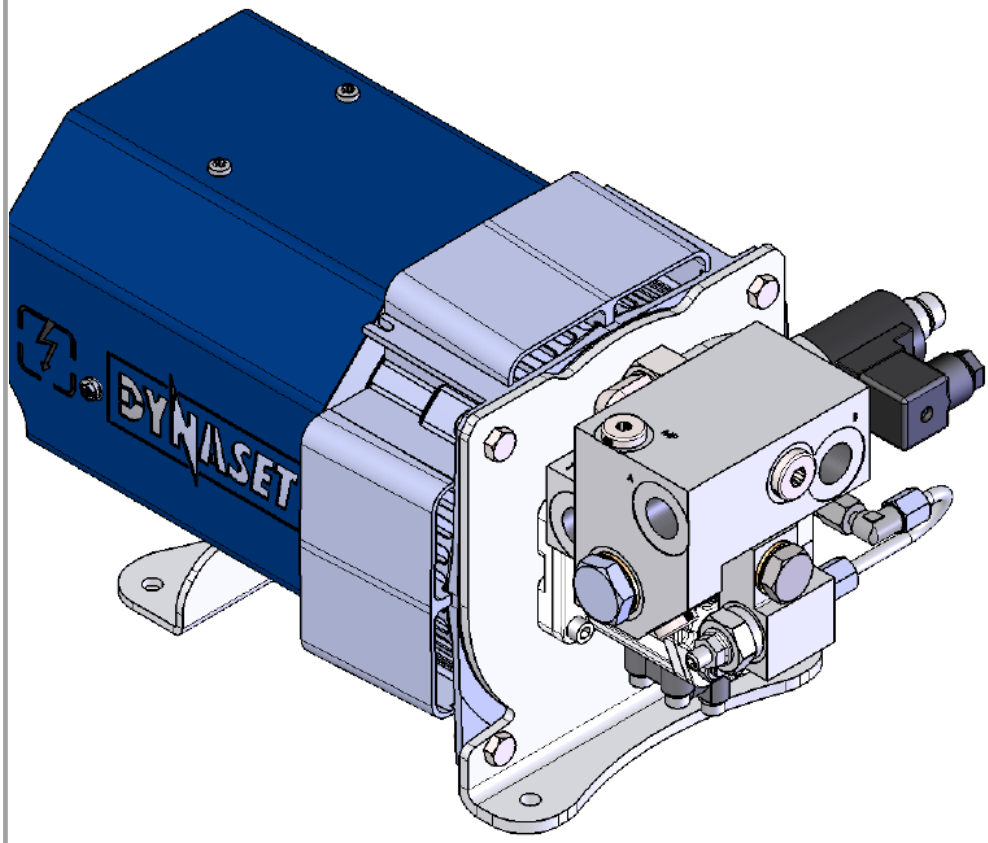

Signal:

Pin Number	Description	Wire Number
1	ECU +ve Feed	4041
2	GND	6041

© 2026 JCB INDIA LTD

Wires & Connectors :	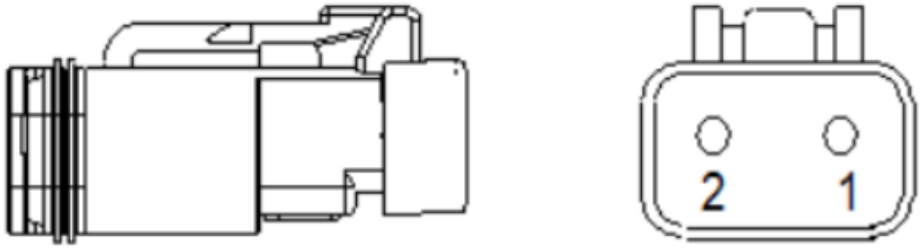
Internal Electrical Schematic:	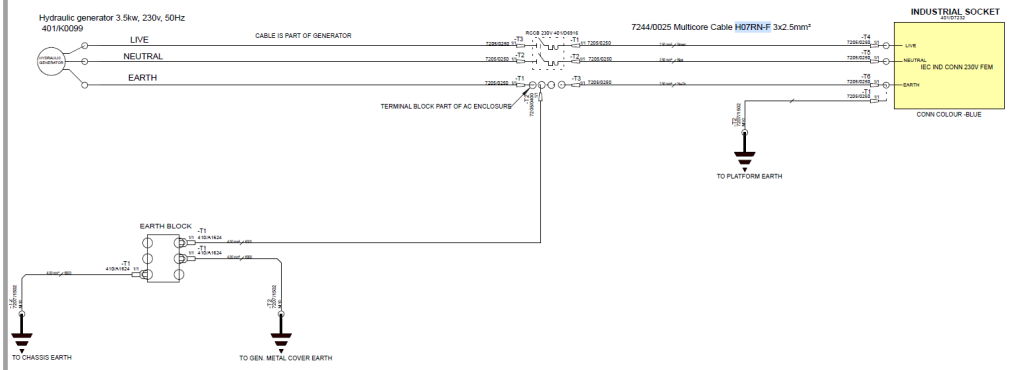
Testing:	It is recommended to check the condition of the hydraulic alternator at least once a month. Make a note of the following: •The alternator safety device can only be tested when the hydraulic alternator is on. •When the test button is pressed the switch must be released immediately. •Do not use the hydraulic alternator with faulty safety equipment.

© 2026 JCB INDIA LTD

•If a fault condition trips the safety device, the fault has to be cleared before the switch can be set back up.

•Do not bypass or remove the safety device to clear the problem.

1. Push the test button to check the functionality of the device. If everything is in order, the switch releases.
2. Switch the reset switch back up to put the hydraulic alternator operational.

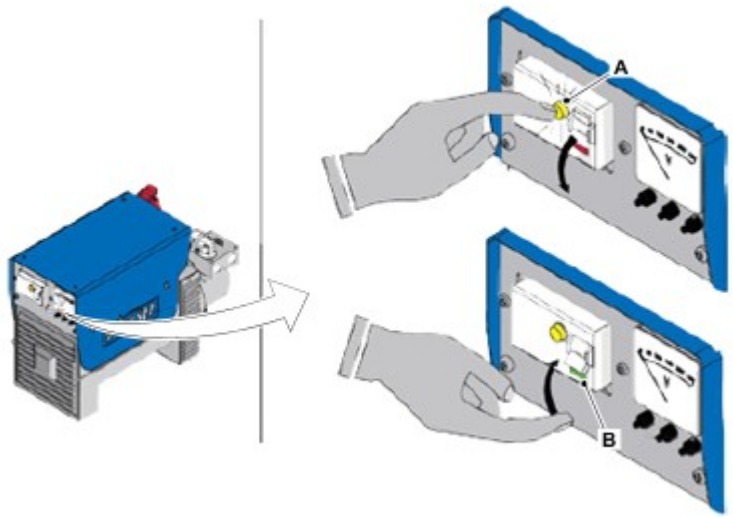

A	Test button
B	Reset switch

© 2026 JCB INDIA LTD

Expected Values:	The solenoid should receive 12V when the hydraulic generator is active
Related Fault Codes:	

Fault Code	Fault Description
B1215 -17 766	Hydraulic generator button - Circuit short to high (10v)
B1216 -16 767	Hydraulic generator button - Circuit short to low
B1217 -24 768	Hydraulic generator button - signal stuck high
B1355 -16 902	Hydraulic Generator - Solenoid - Circuit short to low
B1356 -13 903	Hydraulic Generator - Solenoid high side - Circuit open or short to high (12v)

4.33 AC Connector



AC Connector

Components 134 > AC Connector

Component:	AC Connector
Function:	The GFCI is the power outlet 110V AC Supply it is fitted on Platform of the machine when Hydraulic generator option is used.

© 2026 JCB INDIA LTD

Location:	In Platform near Manual Box
Location **Image:**	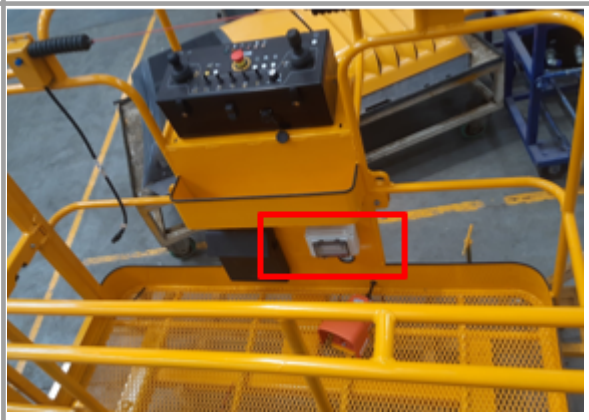 
Signal:	**Pin Number** / **Description** / **Wire Number** T4 (Terminal) / Line / 2.5mm2 Brown T5 (Terminal) / Neutral / 2.5mm2 Blue T6 (Terminal) / Earth / 2.5mm2 YE-GN T7 (Terminal) / GND / 6004

© 2026 JCB INDIA LTD

Wires & Connectors :	 
Internal Electrical Schematic:	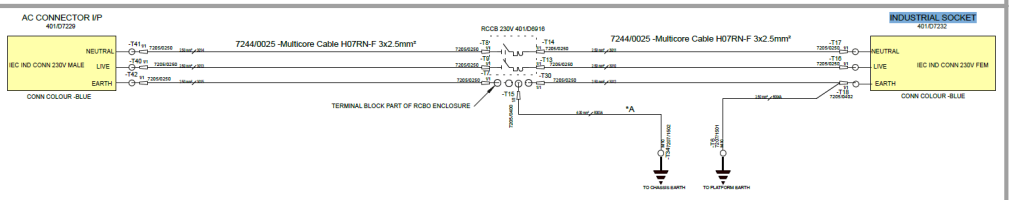 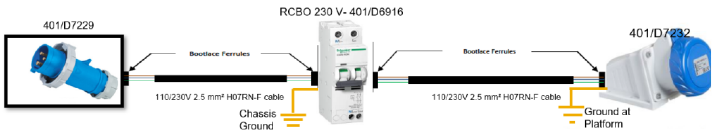
Testing:	Important: Use the multi-meter on the harness connector pins. DO NOT USE the meter on the ECU pins 1.Visually inspect the connectors should not be broken 2.Check for the live neutral and earth connection it should be correctly fitted 3.Check for the continuity as per the PAT guide for live earth and neutral
Expected Values:	110/230V

© 2026 JCB INDIA LTD

Related Fault Codes:	N/A

4.34 Diagnostic Connector



Components 134 > Diagnostic Connector

Component :	Diagnostic Connector
Function:	•The diagnostic connectors are to allow for a laptop connection to the machine.There are 2 connectors and they both have the same access to the machine but in 2 locations to assist various tasks. •The base connection also has a second CAN installed that is for the engine.

© 2026 JCB INDIA LTD

Location:	One available on Base Control and One available in Platform Control box.

© 2026 JCB INDIA LTD

Location

Image:

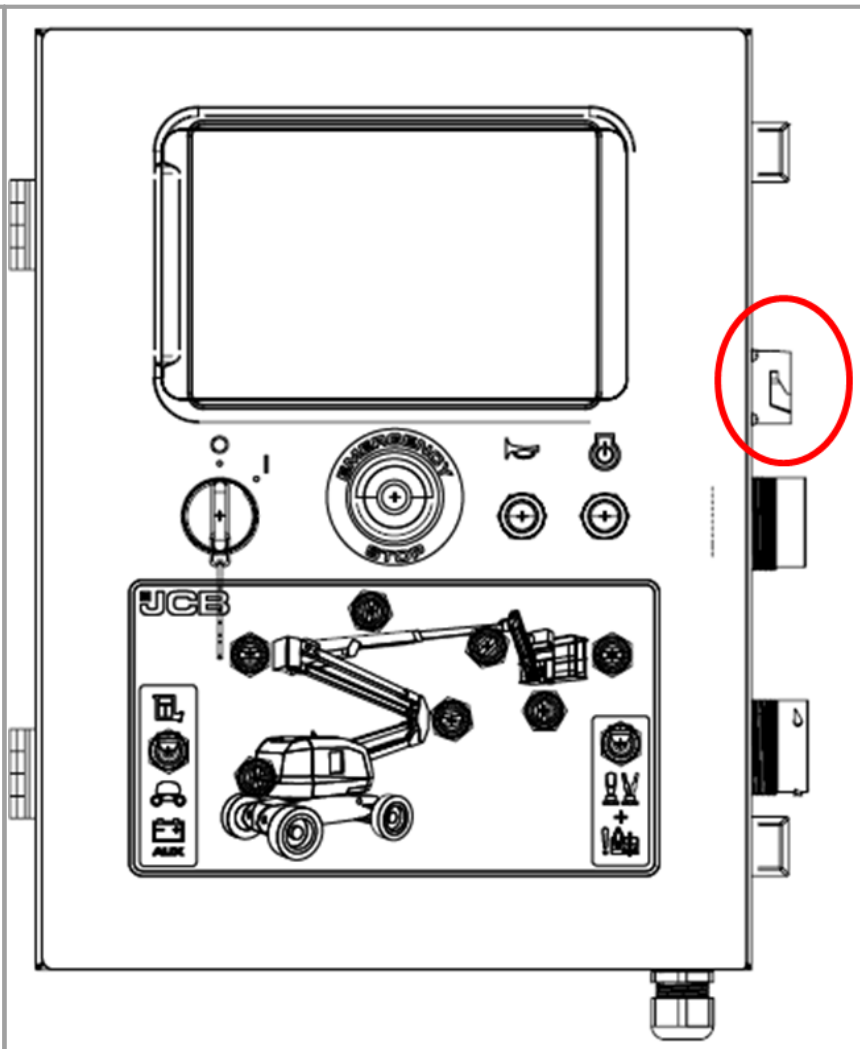

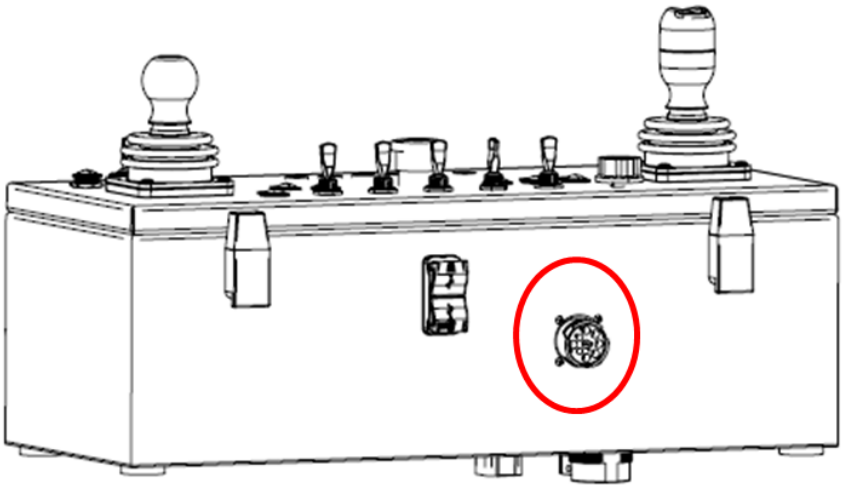

© 2026 JCB INDIA LTD

Signal:

Pin Number	Description	Wire Number/ Colour
A	GND	6063T
B	12V	1016
C	CAN H	Yellow
D	CAN L	Green
E	Shield	Bare Shield
F	NOT IN USE	NOT IN USE
G	NOT IN USE	NOT IN USE
H	15765 CAN H (Only in base connection)	Yellow
J	15765 CAN L (Only in base connection)	Green

Wires & Connectors :

7219/0040 Diagnostic Connector

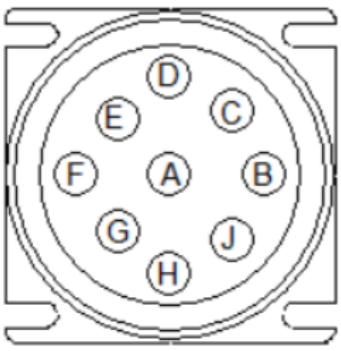

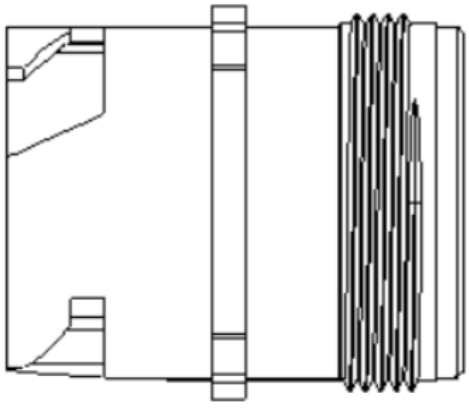

© 2026 JCB INDIA LTD

Internal

Electrical

Schematic:

Base Diagnostic

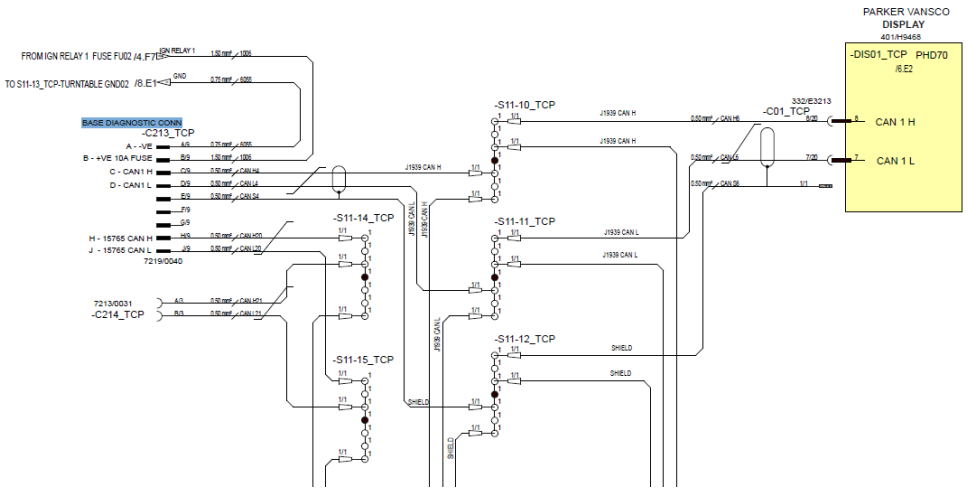

Platform Diagnostic

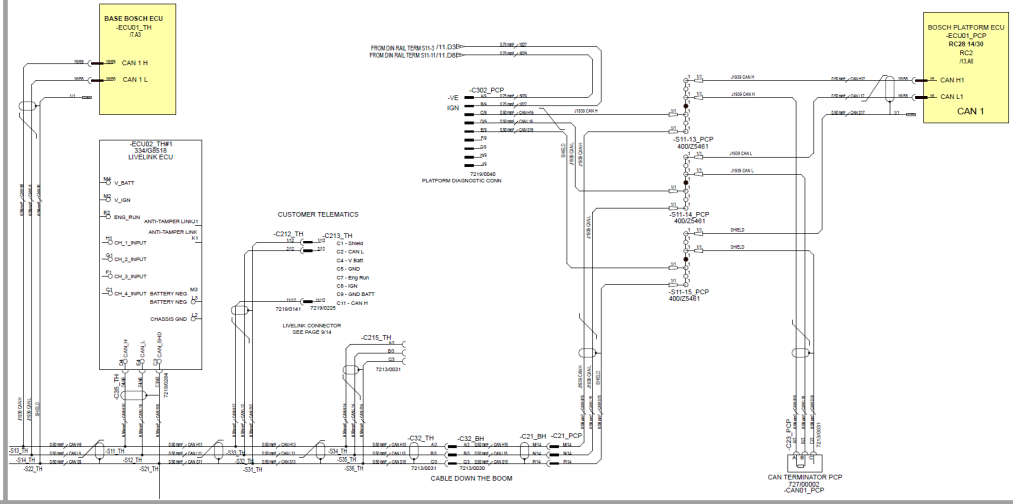

Testing:

Important: Use the multi-meter on the harness connector pins. DO NOT USE the meter on the ECU pins

1. Ensure the machine is switched off.

2. Measure CAN1 resistance between pin 'C' and 'D

© 2026 JCB INDIA LTD

	3. This should read 60 ohms. 4. If this isn't the case the DLA connector is faulty.
Expected Values:	See Signal
Related Fault Codes:	N/A

4.35 Customer Telematics



Components 134 > Customer Telematics

Component :	Customer Telematics

© 2026 JCB INDIA LTD

<table>
<tr><td>Function:</td><td>•Customer Telematics connector is a point that customers can connect up there own Telematics system.
•This is done by some of the large rental fleets that do not use JCB Livelink and have their own solution in place.</td></tr>
<tr><td>Location:</td><td>The Telematics ecu is mounted on the rear of the base control panel box the plug should just be visible from the top of the control panel.</td></tr>
<tr><td>Location Image:</td><td> 
</td></tr>
<tr><td>Signal:</td><td>
<table>
<tr><th>PIN NUMBER</th><th>DESCRIPTION</th><th>WIRE NUMBER</th></tr>
<tr><td>1</td><td>SHIELD</td><td>BARE</td></tr>
</table>
</td></tr>
</table>

© 2026 JCB INDIA LTD

	2	CAN L	GREEN
	3		
	4	V-BATT	3002C
	5	GND	6022DD
	6		
	7	ALTERNATOR RUN SIGNAL	1032D
	8	IGNITION	0040D
	9	GND BATT	6022C
	10	GND POWER	6063G
	11	CAN H	YELLOW
	12		
Wires & Connectors :	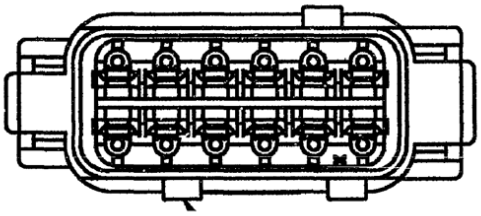 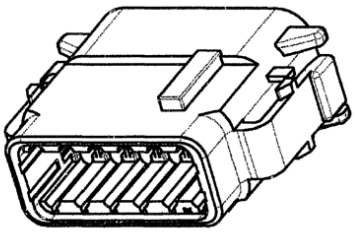		

© 2026 JCB INDIA LTD

Internal **Electrical** **Schematic:**	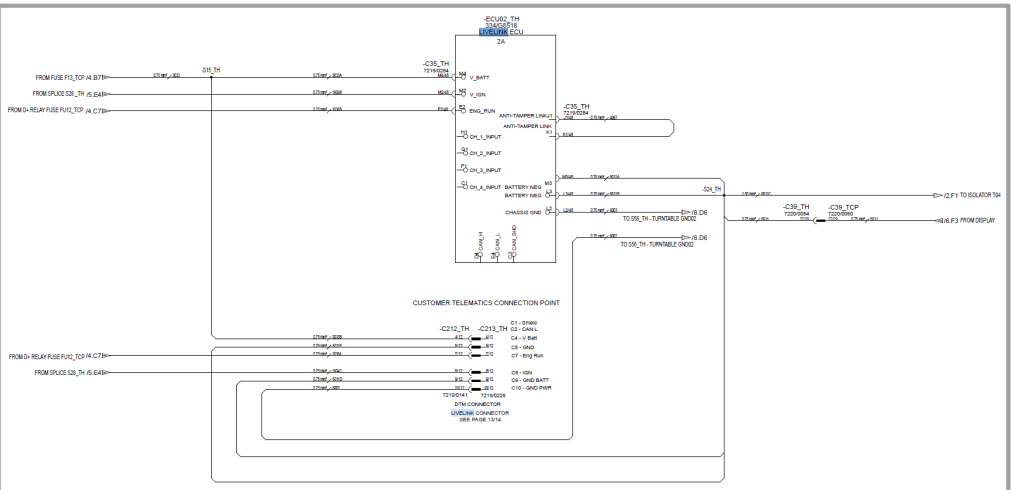
Testing:	Refer existing Live Link ECU help file for testing procedure
Expected **Values:**	12V
Related **Fault** **Codes:**	

Fault Code	Fault Description
U1900-16 946	LIVELINK - VEHICLE VOLTAGE BELOW NORMAL
U1901-16 947	LIVELINK - INTERNAL VOLTAGE BELOW NORMAL
U1904-85 948	LIVELINK - ECU ABOVE TEMPERATURE THRESHOLD
U1905-84 948	LIVELINK - ECU BELOW TEMPERATURE THRESHOLD
U1906-96 949	LIVELINK - ACCELEROMETER INTERNAL FAILURE
U1907-09 949	LIVELINK - MODEM JAMMED
U1908-09 950	LIVELINK - GPS ANTENNA NOT OK
U1909-96 951	LIVELINK - NO COMMS WITH GPS MODULE

© 2026 JCB INDIA LTD

	U190A-96 952	SIM Card Failure
	U190B-96 953	LIVELINK - NO COMMS WITH GSM MODULE
	U190C-86 954	LIVELINK - GSM NETWORK REGISTRATION FAILED

4.36 LiveLink ECU

Livelink ECU

Components 134 > LiveLink ECU

Component :	Livelink ECU
Function:	The Live-link ECU is used for remote monitoring of machine operation, location, health and critical parameters.
Location:	The Livelink ecu is mounted on the rear of the base control panel box the plug should just be visible from the top of the control panel.

© 2026 JCB INDIA LTD

Location

Image:



Signal:

12 WAY DTM FEM KEY C HSG

PIN NUMBER	DESCRIPTION	WIRE NUMBER
M4	V_Batt	3033A
M2	V_IGN	1904B
E2	ENG _RUN	1036B
H1	CH1_INPUT	-
G1	CH2_INPUT	-
F1	CH3_INPUT	-
C1	CH4_INPUT	1036A
D4	IGN	1904C

© 2026 JCB INDIA LTD

	E4	CAN_L	6011D
	C3	CAN_SHD	6002
	L2	CHASSIS GND	CANH12
	L3	BATT_NEG	6011B
	M3	BATT_NEG	6011A
	K1	ANTI_TAMPER LINK	4067
	J1	ANTI_TAMPER LINK	4067
Wires & Connectors :	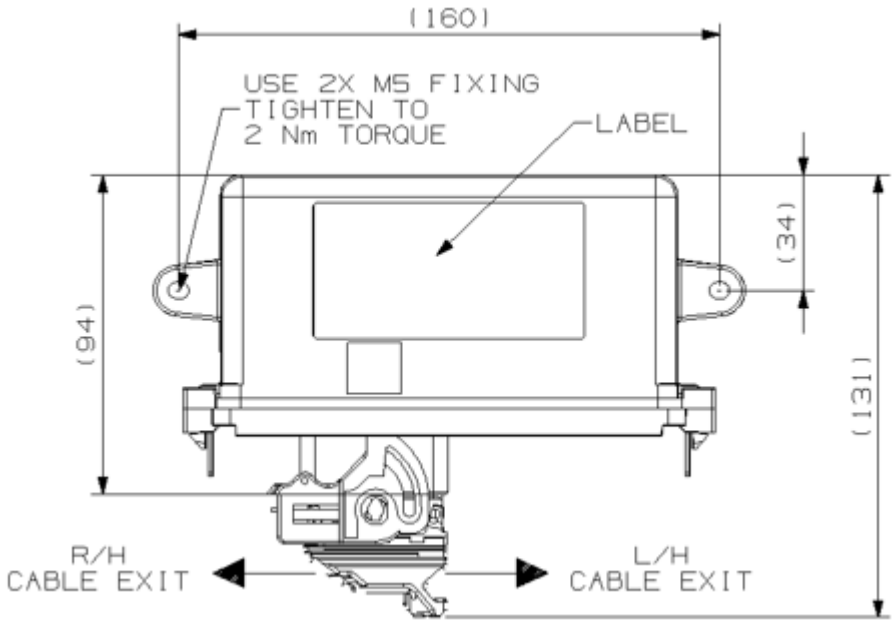		

© 2026 JCB INDIA LTD

Internal **Electrical** **Schematic:**	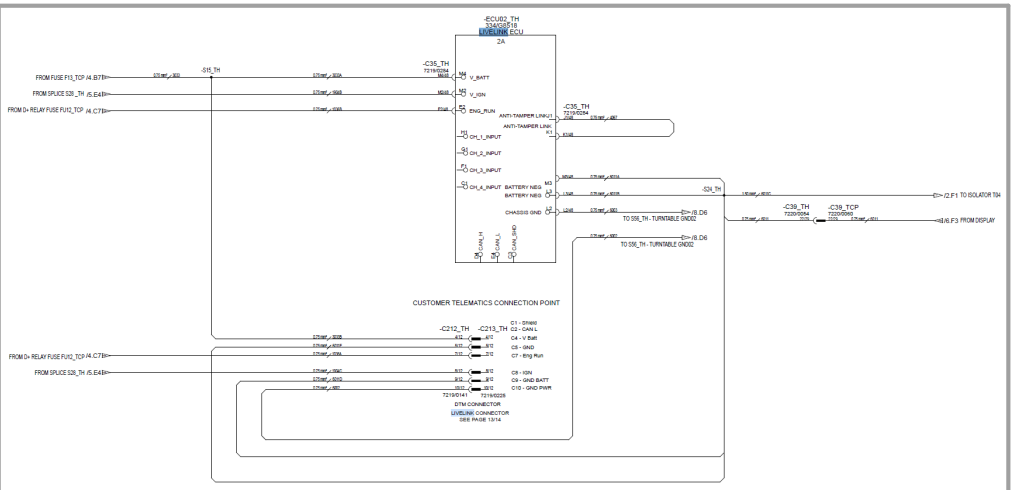
Testing:	Refer existing Live Link ECU help file for testing procedure.
Expected **Values:**	12V
Related **Fault** **Codes:**	

Fault Code	Fault Description
U1900-16 946	LIVELINK - VEHICLE VOLTAGE BELOW NORMAL
U1901-16 947	LIVELINK - INTERNAL VOLTAGE BELOW NORMAL
U1904-85 948	LIVELINK - ECU ABOVE TEMPERATURE THRESHOLD
U1905-84 948	LIVELINK - ECU BELOW TEMPERATURE THRESHOLD
U1906-96 949	LIVELINK - ACCELEROMETER INTERNAL FAILURE
U1907-09 949	LIVELINK - MODEM JAMMED
U1908-09 950	LIVELINK - GPS ANTENNA NOT OK
U1909-96 951	LIVELINK - NO COMMS WITH GPS MODULE

© 2026 JCB INDIA LTD

	U190A-96 952 SIM Card Failure
	U190B-96 953 LIVELINK - NO COMMS WITH GSM MODULE
	U190C-86 954 LIVELINK - GSM NETWORK REGISTRATION FAILED

4.37 Base Bosch ECU



Components 134 > Base Bosch ECU

Component :	Base Bosch ECU
Function:	•When the ECU turns on, there is a check in the Bosch software to ensure the ECU is in a safe state to turn on and enable. •After the Bosch boot block check there should be a check in the software to check for status of inputs to ensure the software is in a safe condition before allowing all functions. •The base Bosch ECU perform all the functions of machine.
Location:	On Chassis near Hydraulic Tank

© 2026 JCB INDIA LTD

Location

Image:

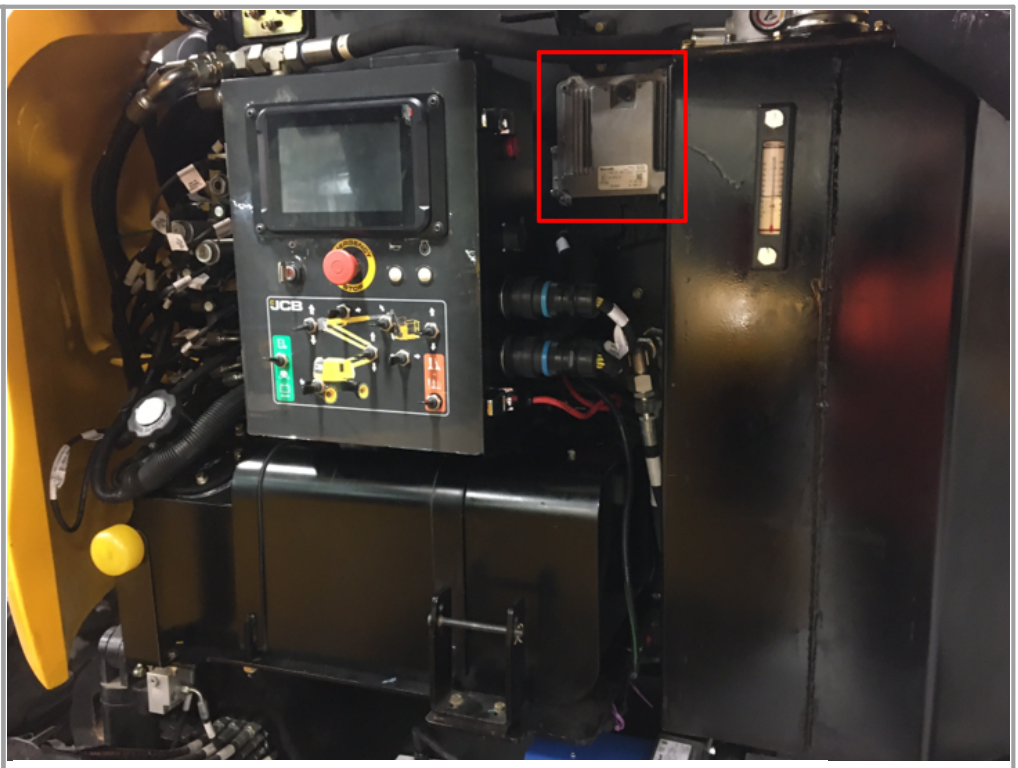



Signal:

58 Way connector		
Pin Number	**Description/ Signal**	**Wire Number**
1	Power Supply - 12V	1023C

© 2026 JCB INDIA LTD

2	GND	6060M
3	Power Supply - 12V	1023D
4	Power Supply - 12V	1023E
5	Power Supply - 12V	1018C
6	Power Supply - 12V	1018G
7	GND	6060L
8	NOT USED	NOT USED
9	Platform leveling Switch input - Lower (10V when pressed)	61
10	Platform leveling Switch input - Raised (10V when pressed)	60
11	Platform rotate switch input - right (10V when pressed)	57
12	Platform rotate switch input - left (10V when pressed)	56
13	NOT USED	NOT USED
14	Jib Switch input - Lower (10V when pressed)	59
15	CAN H1 (yellow)	yellow
16	CAN L1 (Green)	green

© 2026 JCB INDIA LTD

17	NOT USED	NOT USED
18	NOT USED	NOT USED
19	NOT USED	NOT USED
20	GND	6060N
21	NOT USED	NOT USED
22	Override switch unpressed (10V when not pressed)	62
23	NOT USED	NOT USED
24	Boom rest switch input 2	4011
25	Override switch pressed (10V when pressed)	63
26	NOT USED	NOT USED
27	Axle lock pressure sensor (0.5-4.5)	4034
28	E-stop positive (12V when unpressed)	41
29	NOT USED	NOT USED
30	NOT USED	NOT USED
31	NOT USED	NOT USED
32	10V output from ECU	1030C
33	GND	6060P

© 2026 JCB INDIA LTD

	34	Artic boom input switch - raise (10V when pressed)	54
	35	Artic boom input switch - lower (10V when pressed)	55
	36	NOT USED	NOT USED
	37	NOT USED	NOT USED
	38	main boom switch input - lower (10V when pressed)	51
	39	main boom switch input - raise (10V when pressed)	50
	40	ignition switch input (12V)	0040B
	41	Hydraulic generator solenoid output (12V)	4041
	42	high torque solenoid output (12V)	4040
	43	beacon output (12V)	4032
	44	horn relay output (12V)	4035
	45	power electronics input (12V)	1029C
	46	GND	6060R
	47	slew switch input - left (10V when pressed)	49
	48	NOT USED	NOT USED

© 2026 JCB INDIA LTD

49	RC Config 2 (GND)	6060K
50	Engine start switch input (10V when pressed, momentary)	66
51	Platform enable switch (10V when switch at platform)	46
52	Horn input switch (10V when pressed, momentary)	65
53	NOT USED	NOT USED
54	NOT USED	NOT USED
55	NOT USED	NOT USED
56	White noise alarm output	4036C
57	Platform level lower solenoid output	4060
58	Power electronics supply (12V)	1029B

96 Way connector		
Pin Number	**Description/ Signal**	**Wire Number**
1	Lift & slew on/off solenoid output	4062
2	NOT USED	NOT USED

© 2026 JCB INDIA LTD

3	Platform level solenoid output - Raise	4059
4	NOT USED	NOT USED
5	NOT USED	NOT USED
6	NOT USED	NOT USED
7	Platform rotate/ Jib flow solenoid	4061
8	NOT USED	NOT USED
9	NOT USED	NOT USED
10	NOT USED	NOT USED
11	NOT USED	NOT USED
12	NOT USED	NOT USED
13	NOT USED	NOT USED
14	E-Stop -ve (GND when unpressed)	42
15	NOT USED	NOT USED
16	NOT USED	NOT USED
17	NOT USED	NOT USED
18	Blocked air filter signal (GND when blocked)	4023
19	NOT USED	NOT USED
20	NOT USED	NOT USED

© 2026 JCB INDIA LTD

21	NOT USED	NOT USED
22	GND	6060C
23	GND	6060D
24	GND	6060G
25	NOT USED	NOT USED
26	Front brake solenoid output	26/96
27	NOT USED	NOT USED
28	Rear brake solenoid output	4039
29	NOT USED	NOT USED
30	Public proportional solenoid output Highside	4057
31	Axle lock solenoid output Highside	4037
32	NOT USED	NOT USED
33	NOT USED	NOT USED
34	Slew switch input - right (10V when pressed)	48
35	Jib Switch input - raise (10V when pressed)	58
36	Base enable switch (10V when pressed)	47
37	Boom Rest Input switch 1	4009
38	NOT USED	NOT USED

© 2026 JCB INDIA LTD

39	Fuel sender input (resistance to gnd)	39/96
40	NOT USED	NOT USED
41	Tilt sensor input	4022
42	main boom telescope input switch - retract	53
43	NOT USED	NOT USED
44	main boom telescope input switch - extend	52
45	GND	6060H
46	GND	6060J
47	Slew position switch input switch 1	4020
48	main boom telescope limit switch input sw1	4105
49	Slew right proportional output solenoid	4055
50	Steer right solenoid highside output	4052
51	main boom telescope extend solenoid output	4048
52	forward drive solenoid output highside	4064
53	Artic boom raise highside output	4042
54	main boom raise solenoid output	4045
55	NOT USED	NOT USED
56	NOT USED	NOT USED

© 2026 JCB INDIA LTD

57	Slew position limit switch input sw2	4021
58	Engine alternator input signal	1032B
59	main boom telescope retract limit sw2	4106
60	NOT USED	NOT USED
61	NOT USED	NOT USED
62	NOT USED	NOT USED
63	NOT USED	NOT USED
64	NOT USED	NOT USED
65	NOT USED	NOT USED
66	NOT USED	NOT USED
67	NOT USED	NOT USED
68	NOT USED	NOT USED
69	NOT USED	NOT USED
70	NOT USED	NOT USED
71	NOT USED	NOT USED
72	NOT USED	NOT USED
73	slew left proportional solenoid highside	4054
74	Steer left highside output	4051

© 2026 JCB INDIA LTD

75	main boom telescope retract hs output	4049
76	reverse highside solenoid output	4065
77	Articboom lower highside output	4043
78	main boom lower proportional highside output	4046
79	NOT USED	NOT USED
80	Steer left/right lowside	4053A
81	Public proportional Lowside	4058
82	Axle lock solenoid lowside	4038
83	NOT USED	NOT USED
84	main boom raise/lower lowside	4047A
85	Main boom telescope output lowside	4050A
86	Forward/ Reverse output lowside	6015C
87	Slew left/ right output lowside	4065A
88	Artic raise/ lower lowside	4044A
89	Engine ignition output (12V)	4027
90	buzzer highside output	4024
91	NOT USED	NOT USED
92	NOT USED	NOT USED

© 2026 JCB INDIA LTD

	93	electric pump relay highside output	4025
	94	Engine start (crank signal)	4028
	95	NOT USED	NOT USED
	96	NOT USED	NOT USED
Wires & Connectors :	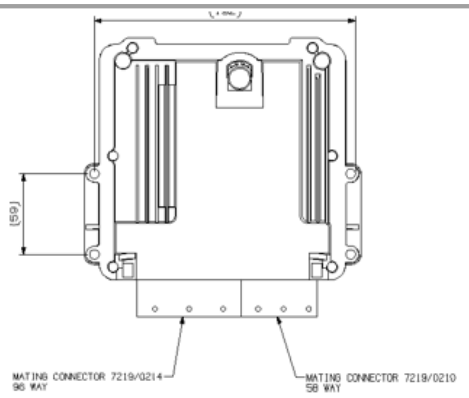 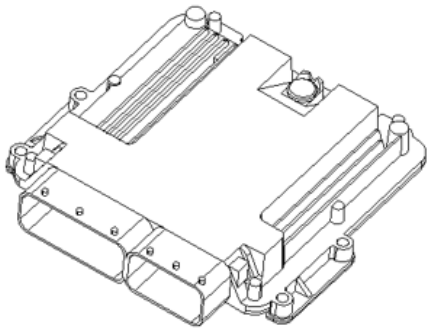		
Internal Electrical Schematic:			
Testing:	Important: Use the multi-meter on the harness connector pins. DO NOT USE the meter on the ECU pins. 1. Connect machine to the Servicemaster diagnostic tool using the DLA Connector.		

© 2026 JCB INDIA LTD

	2. Ensure LED's change state when the corresponding function is selected and ensure a CAN message is being sent from the ECU on the network tab. 3. If faulty replace the MECU.
Expected Values:	See Signal
Related Fault Codes:	Refer PLM doc.AC00001178 for all ECU related fault codes. (Fault code start from B relates to ECU)

4.38 Transmission Pump



Components 134 > Transmission Pump

Component :	Transmission Pump

© 2026 JCB INDIA LTD

Function:	•The transmission pump is controlling the forward and reverse travel when a drive function is operated. •The transmission pump solenoids are proportional control.
Location:	Mount on Engine with flywheel
Location Image:	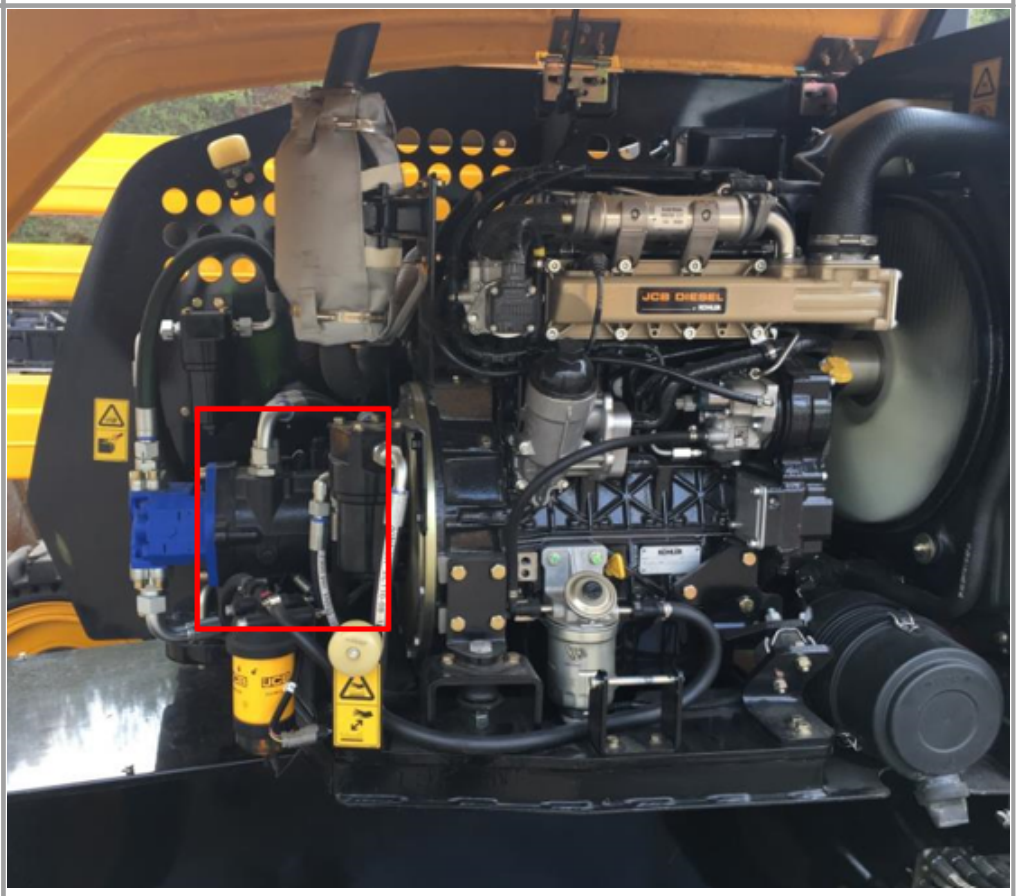

© 2026 JCB INDIA LTD

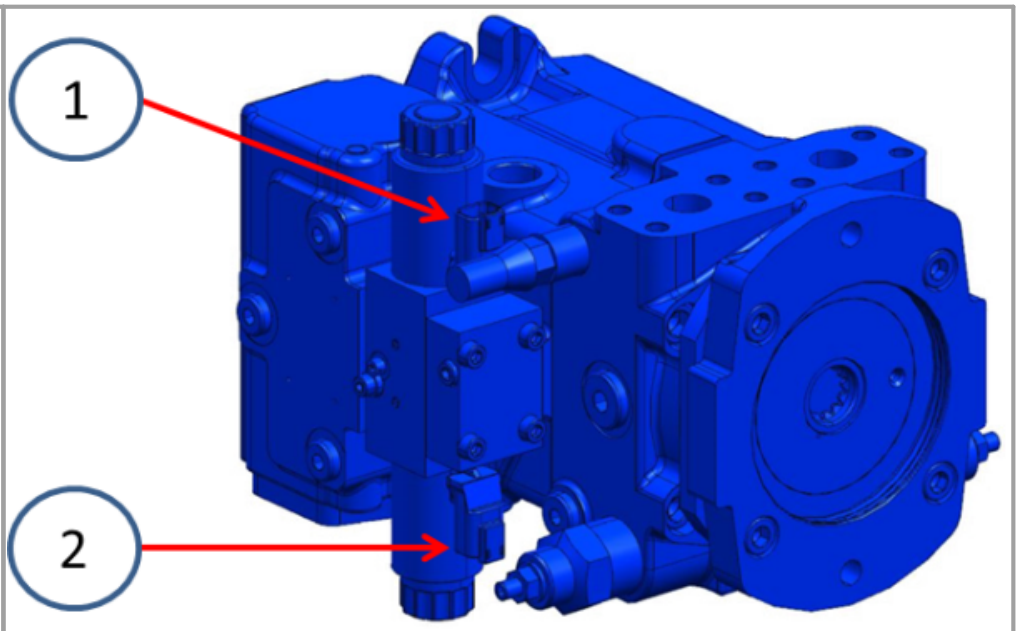

Number	Description
1	Drive Reverse
2	Drive Forwards

Signal:

Pin Number	Description	Wire number
1	Forward Travel Feed	4064
2	Forward Travel Return	6064, 6066
1	Reverse Travel Feed	4065
2	Reverse Travel Return	6065, 6066

© 2026 JCB INDIA LTD

Wires & Connectors :	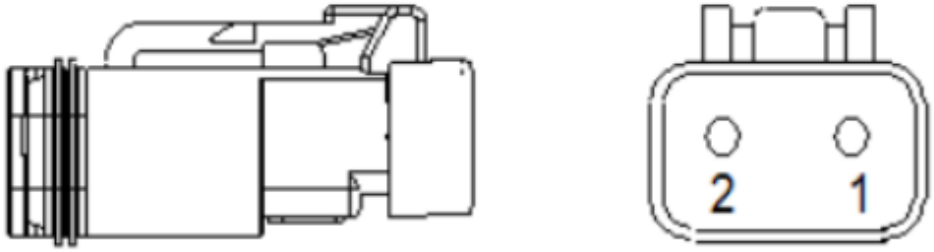
Internal Electrical Schematic:	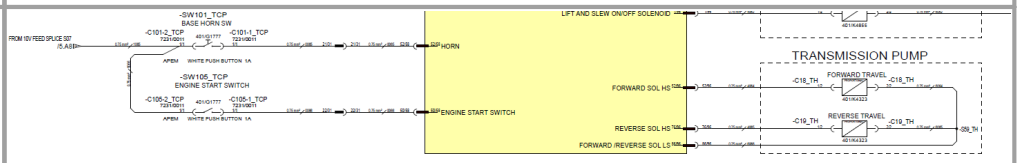
Testing:	Important: Use the multi-meter on the harness connector pins. DO NOT USE the meter on the ECU pins 1. Using a solenoid pen, check to see if the solenoid is powered when the function is in use. 2. If the solenoid pen shows no power, disconnect the harness from the solenoid. 3. Check the resistance across the solenoid. The reading should as 7.4 ohms+/-7&

© 2026 JCB INDIA LTD

	4. If readings are incorrect, replace the solenoid. If correct disconnect the harness at the ECU and check harness continuity, repair/replace if necessary 5. If the harness continuity is OK, replace the solenoid
Expected Values:	12V
Related Fault Codes:	**Fault Code** / **Fault Description** B1030-17 574 — FORWARD OR REVERSE Proportional Solenoid Valve HS SC to High B1031-16 575 — FORWARD OR REVERSE Proportional Solenoid Valve HS SC to Low B1032-13 576 — FORWARD OR REVERSE Proportional Solenoid Valve HS OC B1033-17 577 — FORWARD OR REVERSE Proportional Solenoid Valve LS SC to High B1034-16 578 — FORWARD OR REVERSE Proportional Solenoid Valve LS SC to Low B1035-13 579 — FORWARD OR REVERSE Proportional Solenoid Valve LS OC B1331-13 877 — FORWARD OR REVERSE Proportional Solenoid Valve Fault

4.39 CAN Network

Component :	CAN Network

© 2026 JCB INDIA LTD

Function:	CAN allows the communication between the multiple controllers. There are 2 types of CAN - 1. CAN 1 2. CAN 2
Location:	CAN Harness routed from Base Controller to Platform Controller
Location **Image:**	N/A
Signal:	The data signals are sent through 2 pins - CAN-High and CAN-Low. The signals are differential and so it is the difference between the 2 signals that matters. The messages are sent to all devices on the same network and the receiving device decides whether it is meant for them or not. 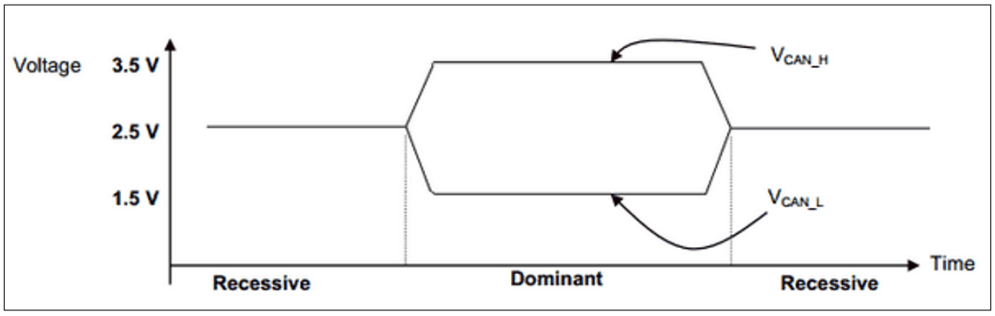

© 2026 JCB INDIA LTD

Wires & Connectors :

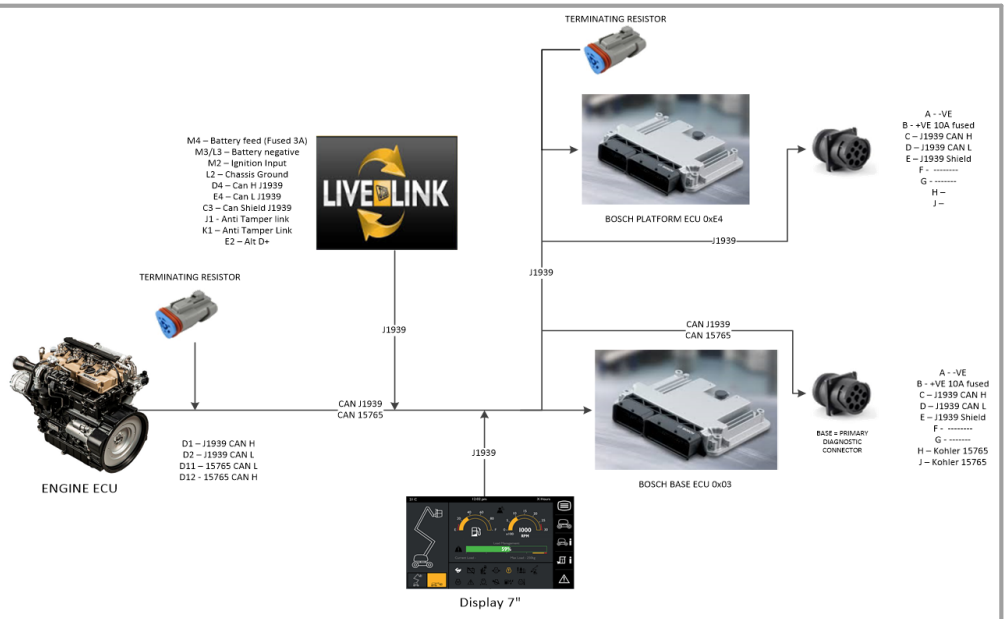

Internal Electrical Schematic:

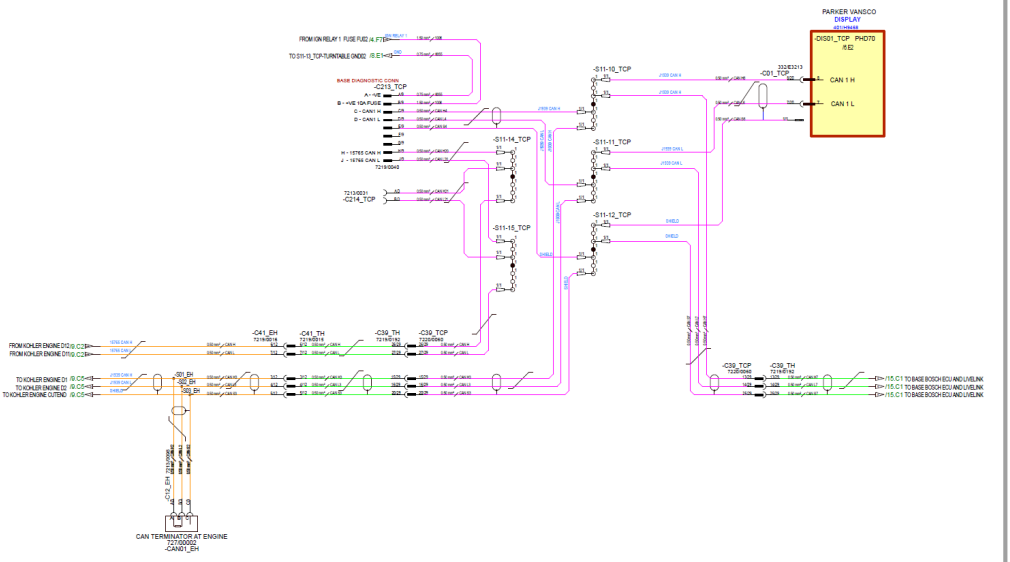

© 2026 JCB INDIA LTD

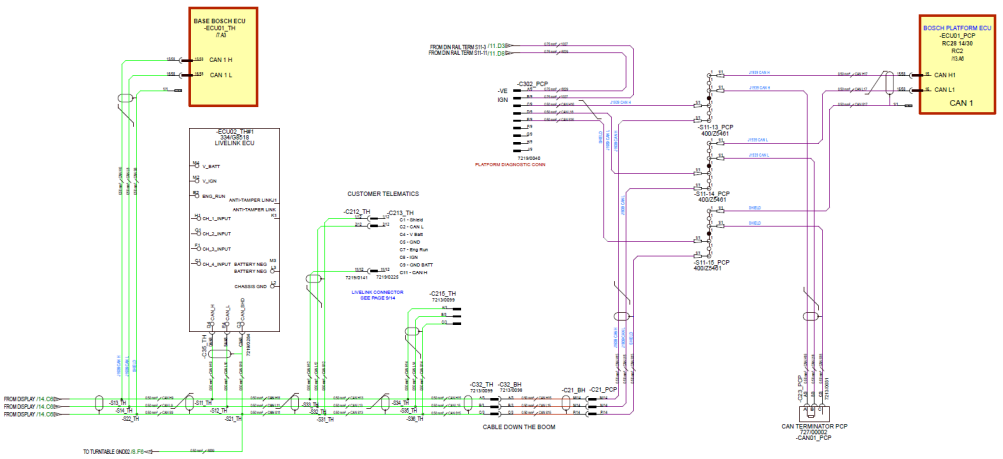

Testing:

1.Turn the Ignition ON

2.check the connection of CAN H & CAN L

3. Check the 120 Ohm terminator resister are connected

4.Operate any Function from platform or Base

5. check the operation

Turn ignition off - also ensure live link is removed or asleep.

There should be 60 Ohms measured at any point on the network between CAN High and CAN L

Expected Values:

No CAN communication Fault

Related Fault Codes:

Fault Code	Description
U0073-87 915	CAN1 node error
U1293-87 918	CAN TIME OUT ERROR
U1294-56 920	CAN RC ERROR - Rolling counter for platform input signal1 message
U1295-41 923	CAN CHECK SUM ERROR
U1296-87 925	CAN TIME OUT ERROR

© 2026 JCB INDIA LTD

U1297-56 929	CAN RC ERROR
U1298-41 927	CAN CHECK SUM ERROR
U1299-87 931	CAN PAIRING FAILED ERROR
U1323-56 933	CAN RC ERROR - Rolling counter for platform output signal1 message
U1324-56 936	CAN RC ERROR
U1325-56 938	CAN RC ERROR
U1326-41 940	CAN CHECK SUM ERROR
U1327-41 942	CAN CHECK SUM ERROR
U1328-41 944	CAN CHECK SUM ERROR

4.40 Platform & Control Panel

Platform & Control Panel

Components 134 > Platform & Control Panel

© 2026 JCB INDIA LTD

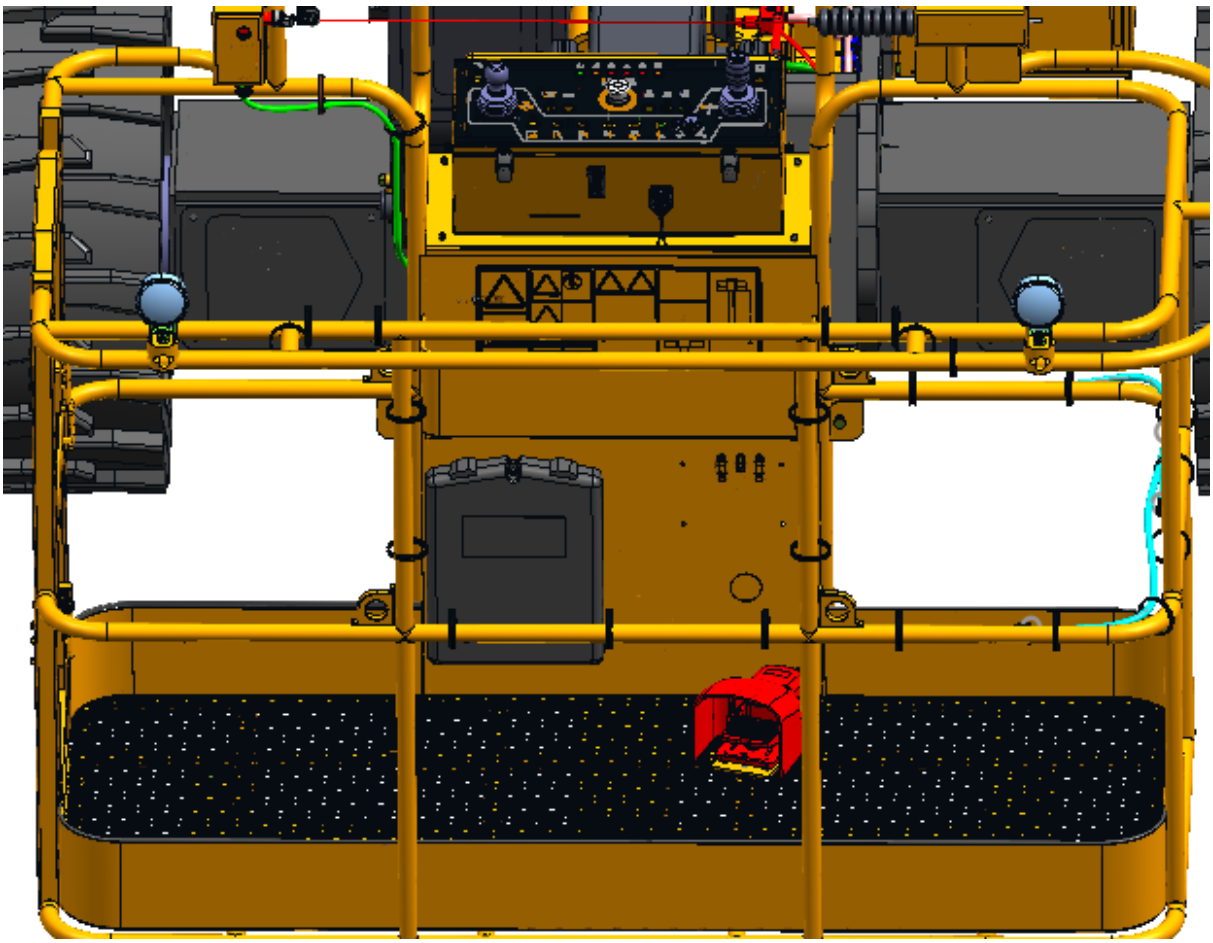

4.40.1 Foot Pedal Switch

Foot Pedal Switch

Components 134 > Platform & Control Panel 312 > Foot Pedal Switch

Component :	Foot Pedal Switch

© 2026 JCB INDIA LTD

<table>
<tr><td>Function:</td><td>•The foot pedal is used as an enable button for the platform control station in most cases.
•The exception to this is engine start and hydraulic generator.</td></tr>
<tr><td>Location:</td><td>The foot pedal is located on the platform floor. When depressed and held,it activates the controls on the platform control console.</td></tr>
<tr><td>Location Image:</td><td>  </td></tr>
<tr><td>Signal:</td><td>
<table>
<tr><th>Pin Number</th><th>Description</th><th>Wire Numbers</th></tr>
<tr><td>C</td><td>Common feed in 10V</td><td>1075H</td></tr>
<tr><td>N/O</td><td>Foot Pedal pressed Signal</td><td>4096</td></tr>
<tr><td>N/C</td><td>Not Used</td><td>Not Used</td></tr>
</table>
</td></tr>
</table>

© 2026 JCB INDIA LTD

Wires & Connectors :	

© 2026 JCB INDIA LTD

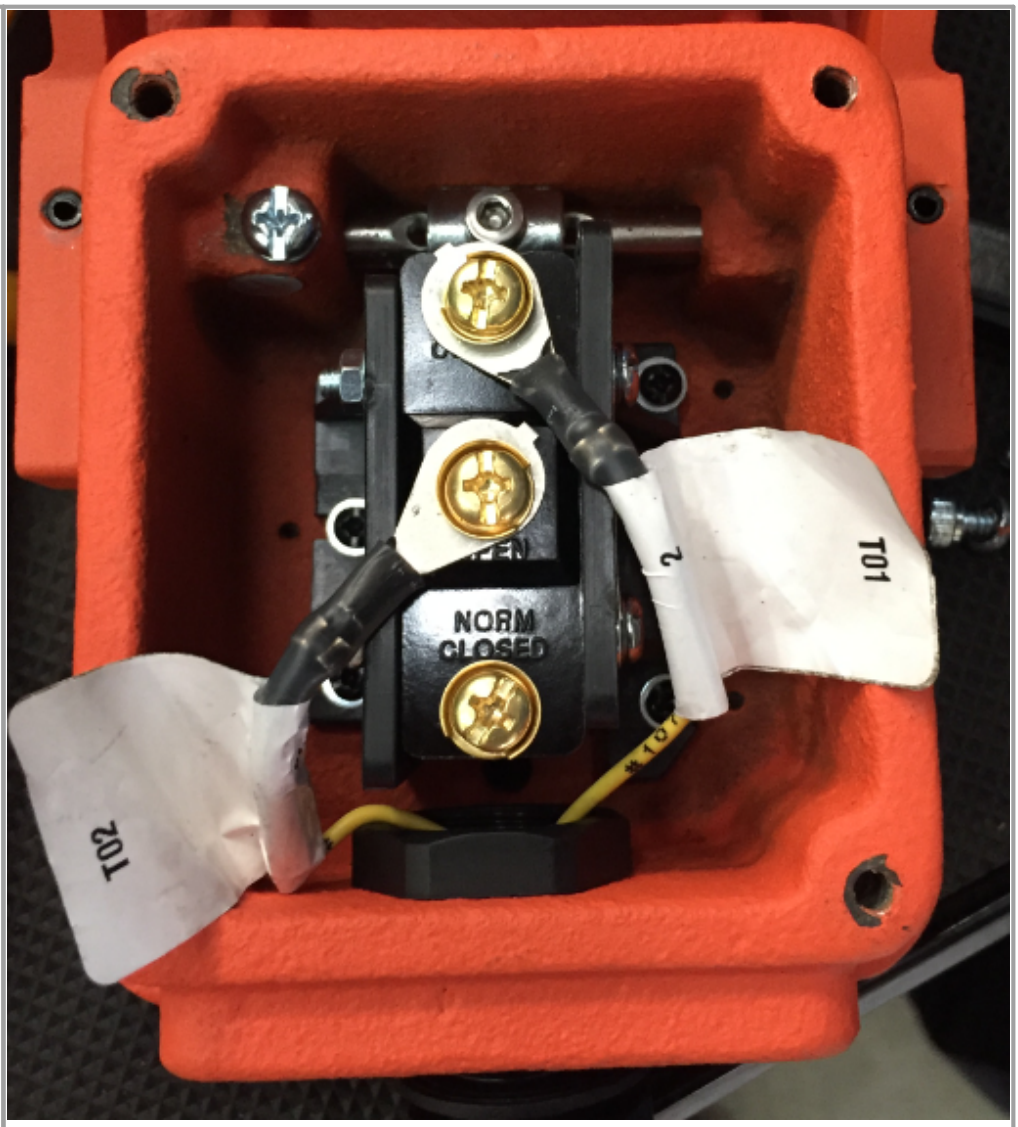

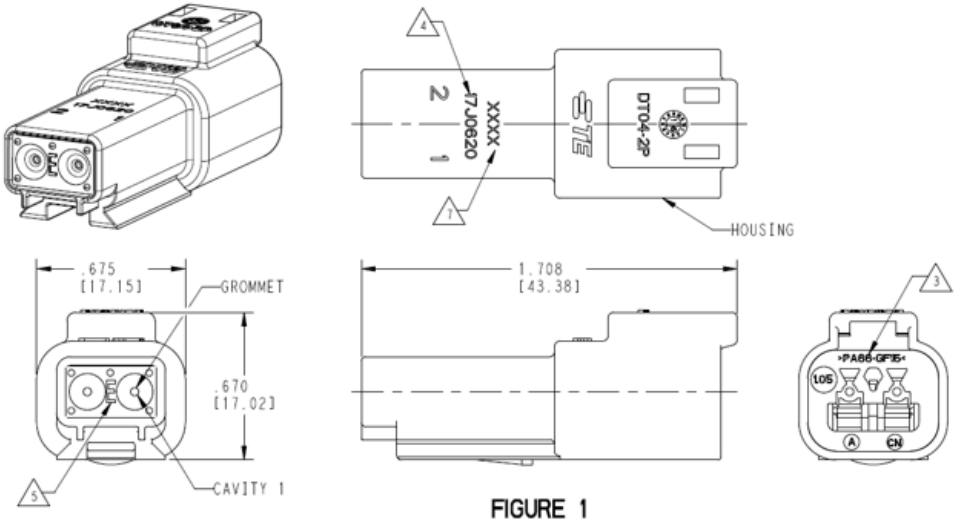

FIGURE 1

© 2026 JCB INDIA LTD

Internal **Electrical** **Schematic:**	
Testing:	Check Continuity between Switch Terminal
Expected **Values:**	12V
Related **Fault** **Codes:**	**Fault Code** / **Description** B1053-17 599 — Foot Pedal Short Circuit to High B1054-16 601 — Foot Pedal Short Circuit to Low B1319-24 869 — Startlock failure - Foot pedal input enabled during startup

4.40.2 Crush Protection

Crush Protection

Components 134 > Platform & Control Panel 312 > Crush Protection

© 2026 JCB INDIA LTD

Component:	Crush Protection
Function:	•The crush protect rope switch is to protect the operator from being crushed onto the controls. •This will automatically limit the permitted movement of the platform so that only downward and/or inward movement (i.e. away from an obstacle) is available, following detection of a crush. In other words, tripping the crush sensor automatically triggers the system to limit the available movement of the platform so that only movement away from the obstacle is possible. •No override mechanism is provided at either the base or the platform; the permitted movement is automatically restricted upon detection of a crush. •A reset switch is provided to enable full movement. An operator would actuate this reset switch once they determine it is safe to do so.
Location:	On Platform near Platform Control Box

© 2026 JCB INDIA LTD

Location Image:



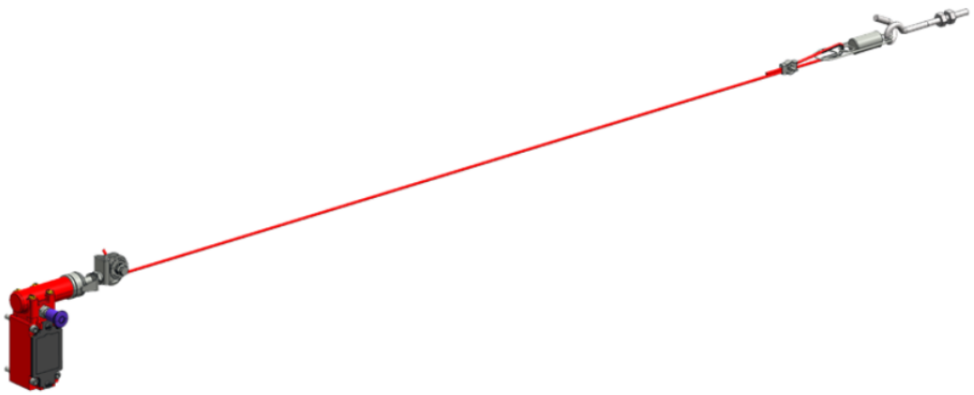

© 2026 JCB INDIA LTD



Signal:

Pin Number	Description	Wire Number
11	5V Feed In	4070
12	Signal	4094
21	10V Feed In	1070D
22	Signal	4093

Wires & Connectors:

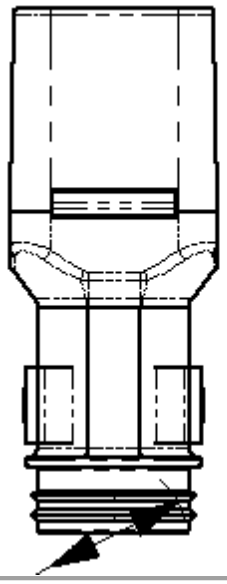

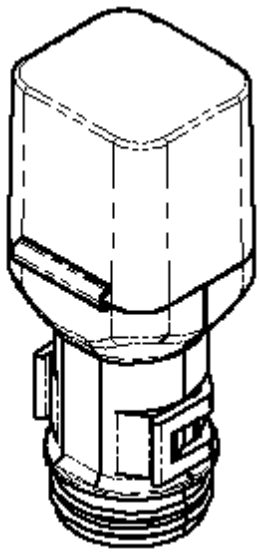

Internal Electrical Schematic:

The crush protection is shown with the switch reset and the rope not pressed.

If there is no tension on the rope switch or the rope switch has been pressed both switches will open circuit.

© 2026 JCB INDIA LTD

	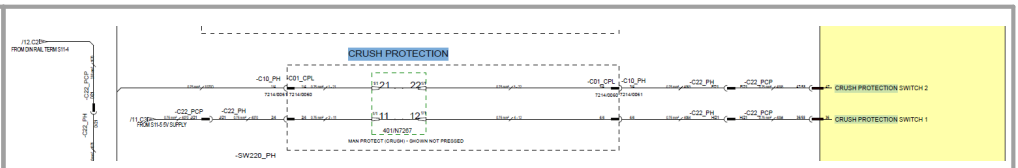
Testing:	Important: Use the multi-meter on the harness connector pins. DO NOT use the meter on the ECU pins Turn on the machine ignition 1. Press on the rope 2. Crush protection Icon should be shown on the display with buzzer 3. User Caution LED at the platform will light up with buzzer. 4. Pull the blue knob out on the switch to reset, Alarms/ icons should go off.
Expected Values:	12V
Related Fault Codes:	

Fault Code	Description
B1025 -13 569	Crush protection position switch - Signal Plausibility failure
B1026 -17 570	Crush protection position Switch 1 Short Circuit to 5v
B1027 -16 571	Crush protection position Switch 1 Short Circuit to Low
B1028 -16 572	Crush protection position Switch 2 Short Circuit to Low
B1029 -17 573	Crush protection position Switch 2 Short Circuit to 10v

4.40.3 Platform Control Panel

Platform Control Panel

Components 134 > Platform & Control Panel 312 > Platform Control Panel

Component:	Platform & Control Panel
Function:	The platform control panel is used for the machine operations.
Location:	On Platform

© 2026 JCB INDIA LTD

Location Image:

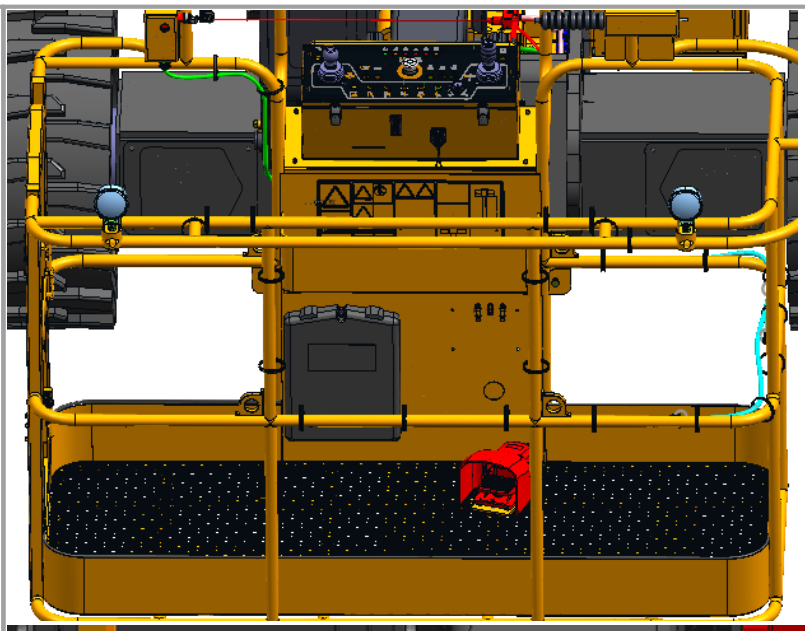



Signal:

-C30_PCP PLATFORM WORKLIGHTS CONN

ID	Tag	Size	Colour	Destination	Cable	Cavity Seal
1	1035	2.00 mm²	YE	-C216-1_PCP:1	-W01_PCP	
2	6079	2.00 mm²	YE	-C22_PCP:G	-W01_PCP	
3						7210/0030
4						7210/0030

7214/0035 4 Way DTP04 Pin Housing Flange Mount

Additional Components

7214/0031;1 # 4 Way DTP04 Wedge

© 2026 JCB INDIA LTD

-C22_PCP PLATFORM INTERCONNECT

ID	Tag	Size	Colour	Destination	Cable	Cavity Seal
A	4091	0.75 mm²	YE	-C26-XC2_PCP:22	-W01_PCP	
B	8079	2.00 mm²	YE	-T-S11-12-F_PCP:1	-W01_PCP	
C	4092	0.75 mm²	YE	-C27-XC1_PCP:57	-W01_PCP	
D	1070	2.00 mm²	YE	-T-S11-4-F_PCP:1	-W01_PCP	
E	6036	2.00 mm²	YE	-T-S11-10-E_PCP:1	-W01_PCP	
F	4093	0.75 mm²	YE	-C26-XC2_PCP:47	-W01_PCP	
G	6079	2.00 mm²	YE	-C30_PCP:2	-W01_PCP	
H	4094	0.75 mm²	YE	-C26-XC2_PCP:36	-W01_PCP	
J	4070	0.75 mm²	YE	-T-S11-5-D_PCP:1	-W01_PCP	
K	4096	0.75 mm²	YE	-C27-XC1_PCP:47	-W01_PCP	
L	4097	0.75 mm²	YE	-C27-XC1_PCP:37	-W01_PCP	
M	4098	0.75 mm²	YE	-C26-XC2_PCP:24	-W01_PCP	
N	4081	0.75 mm²	YE	-C27-XC1_PCP:54	-W01_PCP	
P	4082	0.75 mm²	YE	-C27-XC1_PCP:78	-W01_PCP	
R	4083	0.75 mm²	YE	-C27-XC1_PCP:53	-W01_PCP	
S	4084	0.75 mm²	YE	-C27-XC1_PCP:77	-W01_PCP	
T	1030	0.75 mm²	YE	-T-S11-2-F_PCP:1	-W01_PCP	
U	6072	0.75 mm²	YE	-T-S11-6-B_PCP:1	-W01_PCP	
V	6070	0.75 mm²	YE	-T-S11-6-D_PCP:1	-W01_PCP	
W	4101	0.75 mm²	YE	-C27-XC1_PCP:69	-W01_PCP	
X	4102	0.75 mm²	YE	-C27-XC1_PCP:70	-W01_PCP	

7220/0046 21 Way HDP Bulkhead Pin Housing (Receptacle)

Additional Components

7210/0047;1 # Size 24 Lockwasher
7210/0048;1 # Size 24 Plastic Jam Nut

-C21_PCP BOOM HARNESS CONN

ID	Tag	Size	Colour	Destination	Cable	Cavity Seal
A	1014	2.00 mm²	YE	-T-S11-1-E_PCP:1	-W01_PCP	
B	1015	2.00 mm²	YE	-T-S11-2-E_PCP:1	-W01_PCP	
C						7204/0028
D	6078	2.00 mm²	YE	-T-S11-7-B_PCP:1	-W01_PCP	
E	6040	2.00 mm²	YE	-T-S11-10-F_PCP:1	-W01_PCP	
F	6028	2.00 mm²	YE	-T-S11-11-D_PCP:1	-W01_PCP	
G						7210/0030
H						7210/0030
J						7210/0030
K						7210/0030
L						7210/0030
M	CAN H15	0.50 mm²	YE	-T-S11-13-F_PCP:1	-MC11_PCP	
N	CAN L15	0.50 mm²	GN	-T-S11-14-F_PCP:1	-MC11_PCP	
P	CAN S15	0.50 mm²	N/A	-T-S11-15-F_PCP:1	-MC11_PCP	

7219/0087 14 Way HDP Bulkhead Pin Housing (Receptacle) Size 18

Additional Components

7210/0119;1 # Size 18 Plastic Jam Nut
7210/0120;1 # Size 18 Lockwasher
7243/0606;1 # Gasket - TE/HDP Series

© 2026 JCB INDIA LTD

Wires & Connectors :

Boom Harness connector C21: Platform interconnection C22: Platform work light interconnection C31:

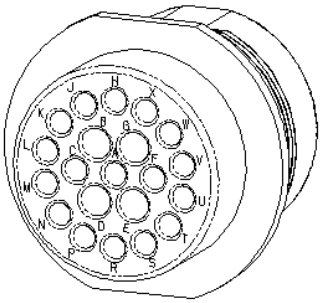

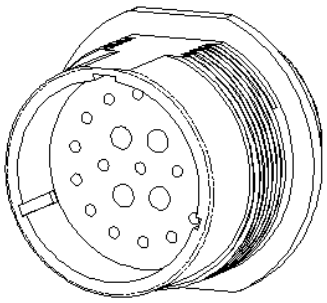

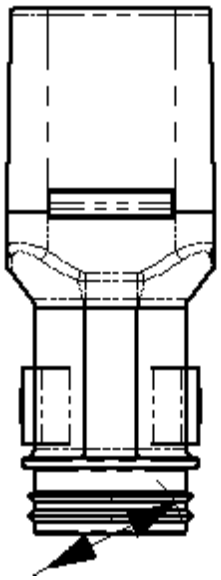

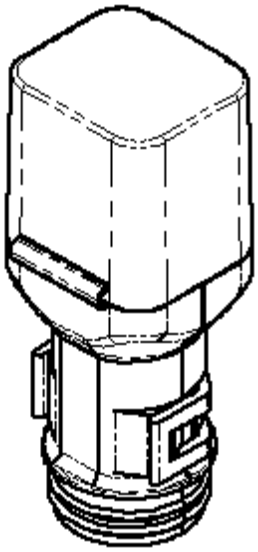

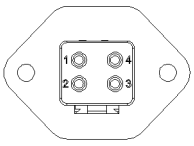

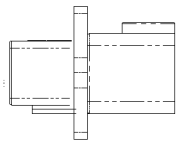

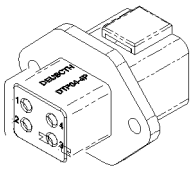

© 2026 JCB INDIA LTD

Internal Electrical Schematic:	Refer AJ48D Boom Schematic Part No : 401/T6225
Testing:	N/A
Expected Values:	N/A
Related Fault Codes:	N/A

4.40.4 Platform ECU



Platform ECU

Components 134 > Platform & Control Panel 312 > Platform ECU

Component :	Platform ECU
Function:	• When the ECU turns on, there is a check in the Platform software to ensure the ECU is in a safe state to turn on and enable. • After the Bosch boot block check there should be a check in the software to check for status of inputs to ensure the software is in a safe condition before allowing all functions.

© 2026 JCB INDIA LTD

	• The Platform Bosch ECU perform all the functions of machine.
Location:	The platform ECU is located inside the control box.
Location Image:	 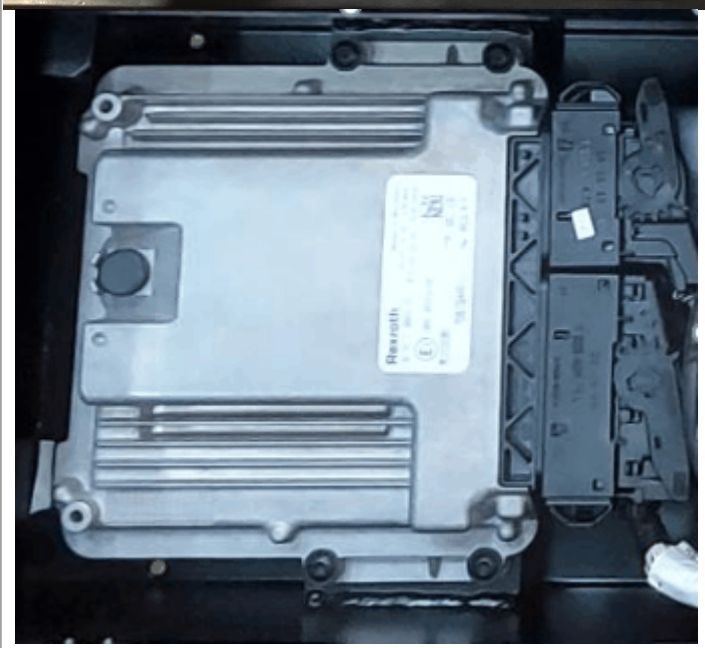
Signal:	58 Way Connector

© 2026 JCB INDIA LTD

Pin Number	Description/Signal	Wire Number
1	Power Supply 12V input	1044
2	GND Signal	6039
3	Power Supply 12V input	1045
4	Power Supply 12V input	1046
5	Power Supply 12V input	1047
6	Power Supply 12V input	1048
7	GND Signal	6040
8	NOT USED	NOT USED
9	Platform level lower switch input (10V when pressed)	81
10	Platform level raise switch input (10V when pressed)	80
11	Platform rotate right switch input (10V when pressed)	79
12	platform rotate left switch input (10V when pressed)	78
13	NOT USED	NOT USED
14	Jib Lower switch input (10V when pressed)	77

© 2026 JCB INDIA LTD

15	CAN H1 J1939	yellow
16	CAN L1 J1939	Green
17	NOT USED	NOT USED
18	NOT USED	NOT USED
19	5V Supply potentiometer (5V)	4074
20	GND	6041
21	NOT USED	NOT USED
22		
23		
24		
25	Hydraulic generator switch input (10V when pressed, momentary)	82
26	Drive joystick input (0.5-2.5-4.5)	4073
27	NOT USED	NOT USED
28	E-Stop Positive (12V when un-pressed)	68
29	NOT USED	NOT USED
30	NOT USED	NOT USED
31	Slew joystick input (0.5-2.5-4.5)	4070

© 2026 JCB INDIA LTD

32	10V ECU Output (10V)	62
33	GND	6042
34	Artic boom switch raise (10V when pressed)	73
35	Artic boom switch lower (10V when pressed)	72
36	Crush protection (5V when not pressed and reset)	4094
37	NOT USED	NOT USED
38	NOT USED	NOT USED
39	NOT USED	NOT USED
40	Ignition feed (12V with key on)	1055
41	Fault LED Output (12V when fault)	4078
42	low fuel led output (12V when Low fuel)	4090
43	high engine speed led (12V when high speed enabled)	4089
44	NOT USED	NOT USED
45	Power supply input (12V)	1049
46	GND	6043
47	crush protection (10V when not pressed and reset)	4093
48	Engine high speed switch input	88

© 2026 JCB INDIA LTD

49	RC Config 2 open circuit	NOT USED
50	engine start switch input (10V when pressed, momentary)	86
51	Slew acknowledgement switch input	83
52	Horn switch input	85
53	NOT USED	NOT USED
54	NOT USED	NOT USED
55	5V Feed to Joysticks via din rail S11-5 (5V output from ecu)	4069
56	NOT USED	NOT USED
57	NOT USED	NOT USED
58	power supply electronics (12V)	1050

96 Way connector		
Pin Number	**Description/Signal**	**Wire Number**
1	NOT USED	NOT USED
2	NOT USED	NOT USED

© 2026 JCB INDIA LTD

3	Proximity reset led output (12V when on)	4087
4	NOT USED	NOT USED
5	NOT USED	NOT USED
6	Caution LED Output (12V when on)	4077
7	High torque LED output	4088
8	NOT USED	NOT USED
9	NOT USED	NOT USED
10	NOT USED	NOT USED
11	NOT USED	NOT USED
12	NOT USED	NOT USED
13	NOT USED	NOT USED
14	E-Stop -ve feed (GND when unpressed)	69
15	NOT USED	NOT USED
16	NOT USED	NOT USED
17	NOT USED	NOT USED
18	NOT USED	NOT USED
19	NOT USED	NOT USED
20	NOT USED	NOT USED

© 2026 JCB INDIA LTD

21	NOT USED	NOT USED
22	GND	6045
23	GND	6046
24	GND	6047
25	NOT USED	NOT USED
26	NOT USED	NOT USED
27	NOT USED	NOT USED
28	Hydraulic generator LED (12V when active)	4085
29	NOT USED	NOT USED
30	NOT USED	NOT USED
31	NOT USED	NOT USED
32	NOT USED	NOT USED
33	NOT USED	NOT USED
34	NOT USED	NOT USED
35	Jib Switch input - raise (10V when pressed)	76
36	High Torque switch input (10V when pressed, momentary)	87
37	NOT USED	NOT USED

© 2026 JCB INDIA LTD

	38	NOT USED	NOT USED
	39	Potentiometer signal (0-5V)	4075
	40	NOT USED	NOT USED
	41	Steer Joystick signal	4072
	42	Main boom telescope input switch - retract (10V when pressed)	75
	43	electric pump switch input (10V when pressed, momentary)	89
	44	Main boom telescope input switch - extend (10V when pressed)	74
	45	5V GND potentiometer	6027
	46	5V GND joysticks, potentiometer	6028
	47	Foot pedal input (10V when pressed)	4096
	48	proximity reset switch (10V when pressed, momentary)	0084 (switch is optional fit)
	49	NOT USED	NOT USED
	50	NOT USED	NOT USED
	51	NOT USED	NOT USED
	52	NOT USED	NOT USED

© 2026 JCB INDIA LTD

53	Platform rotate right solenoid output (12V when active)	4083
54	Jib lower solenoid output (12V when active)	4081
55	NOT USED	NOT USED
56	NOT USED	NOT USED
57	NOT USED	NOT USED
58	NOT USED	NOT USED
59	NOT USED	NOT USED
60	NOT USED	NOT USED
61	NOT USED	NOT USED
62	NOT USED	NOT USED
63	NOT USED	NOT USED
64	Main boom joystick input signal (0.5-2.5-4.5)	4071
65	NOT USED	NOT USED
66	NOT USED	NOT USED
67	NOT USED	NOT USED
68	NOT USED	NOT USED
69	Load cell sensor 1	4101

© 2026 JCB INDIA LTD

70	Load cell sensor 2	4102
71	NOT USED	NOT USED
72	NOT USED	NOT USED
73	NOT USED	NOT USED
74	NOT USED	NOT USED
75	NOT USED	NOT USED
76	NOT USED	NOT USED
77	platform rotate left solenoid output	4084
78	Jib raise solenoid output	4082
79	NOT USED	NOT USED
80	NOT USED	NOT USED
81	NOT USED	NOT USED
82	NOT USED	NOT USED
83	NOT USED	NOT USED
84	NOT USED	NOT USED
85	NOT USED	NOT USED
86	NOT USED	NOT USED
87	NOT USED	NOT USED

© 2026 JCB INDIA LTD

	88	NOT USED	NOT USED
	89	Slew acknowledgment LED output	4086
	90	Buzzer output	4076
	91	NOT USED	NOT USED
	92	NOT USED	NOT USED
	93	overload LED output	4080
	94	Tilt LED output	4079
	95	NOT USED	NOT USED
	96	RC Config pin 1 (GND)	6036

Wires & Connectors :

-C27-XC1_PCP#1

7219/0214

PLATFORM ECU 96PIN CONN

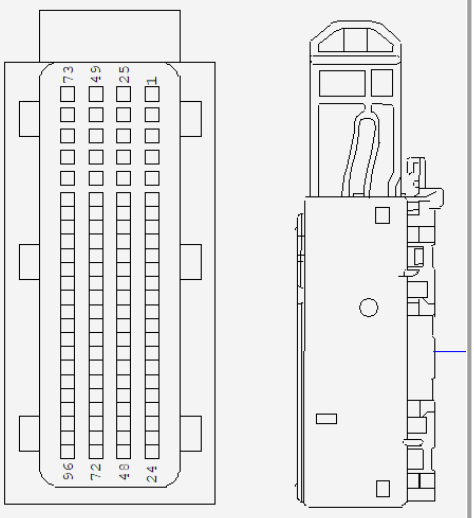

© 2026 JCB INDIA LTD

	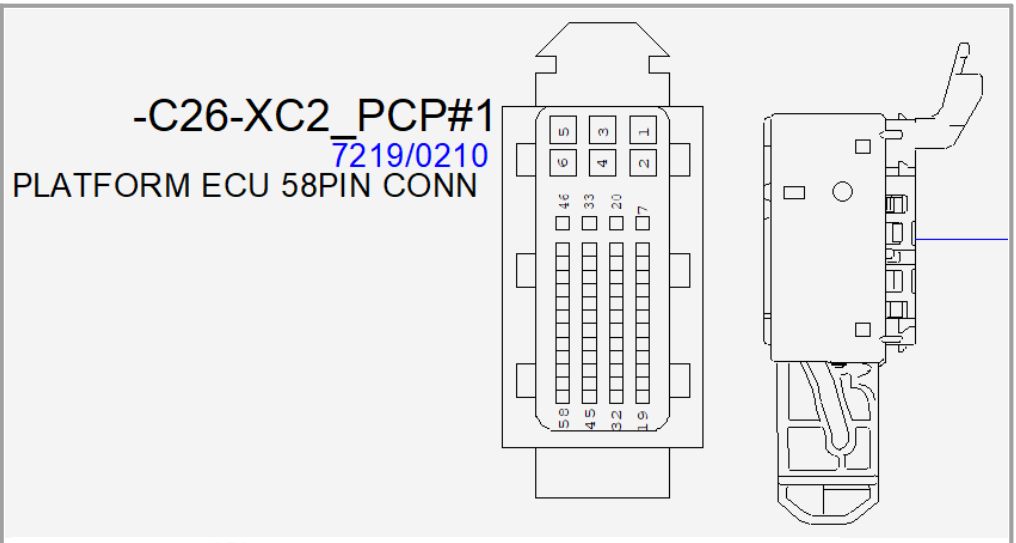 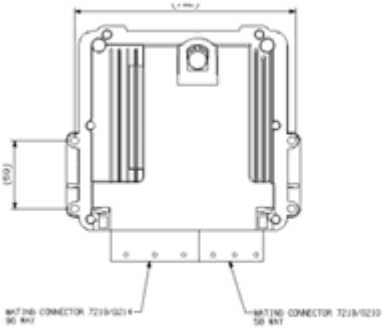 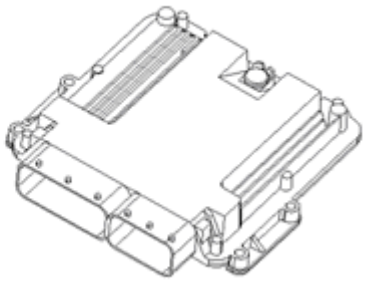
Internal **Electrical** **Schematic:**	Refer AJ48D Boom Electrical schematic:-Part No: 401/T6225.
Testing:	Important: Use the multi-meter on the harness connector pins. DO NOT USE the meter on the ECU pins

© 2026 JCB INDIA LTD

	1. Connect machine to the Servicemaster diagnostic tool using the DLA Connector. 2. Ensure LED's change state when the corresponding function is selected and ensure a CAN message is being sent from the ECU on the network tab. 3. If faulty replace the MECU.
Expected Values:	
Related Fault Codes:	**Fault Code** / **Description** U1299-87 931 / CAN Signal pairing failure

4.40.5 Platform Buzzer



Components 134 > Platform & Control Panel 312 > Platform Buzzer

© 2026 JCB INDIA LTD

Component:	Platform Buzzer
Function:	•The buzzer is there to warn the operator when either an fault or error has happened with the machine or to warn of machine is awaiting for operator action. •For example, if the foot pedal is pressed for longer than 10 seconds without a function being pressed, this will time out and make the buzzer sound. •The platform buzzer and the base buzzer should be a repeat of each other. •If 1 buzzer is working and the other is not then there is issue with the buzzer
Location:	Inside the Platform Control Box

© 2026 JCB INDIA LTD

Location Image:

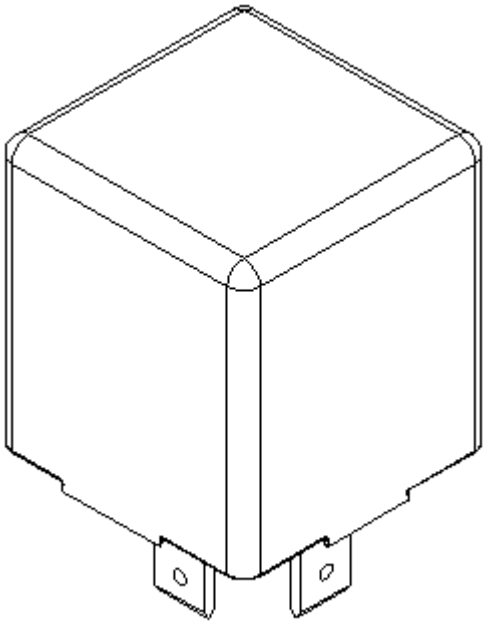

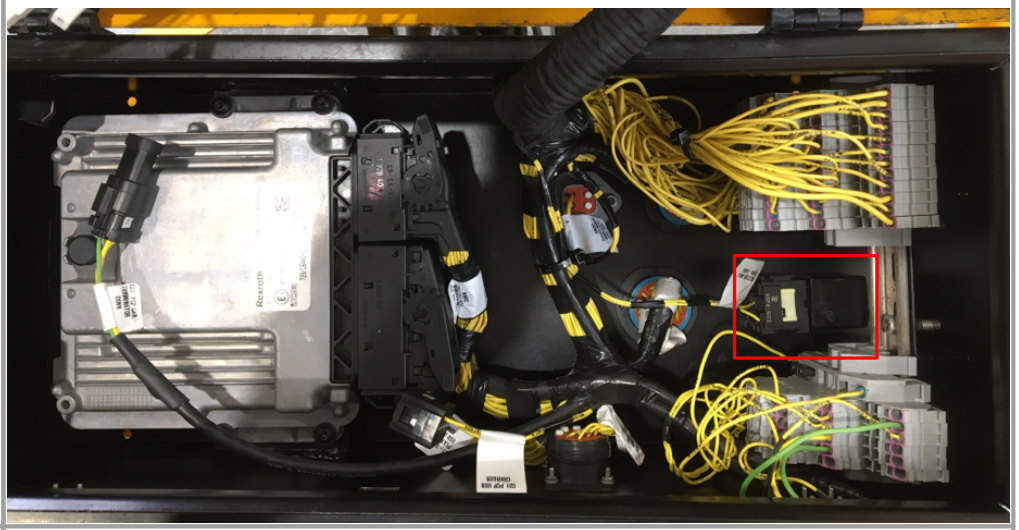

Signal:

Pin Number	Description	Wire number
1	IGN	4076
2	BUZZ	
3		
4	GND	6076
5		

© 2026 JCB INDIA LTD

Wires & Connectors :	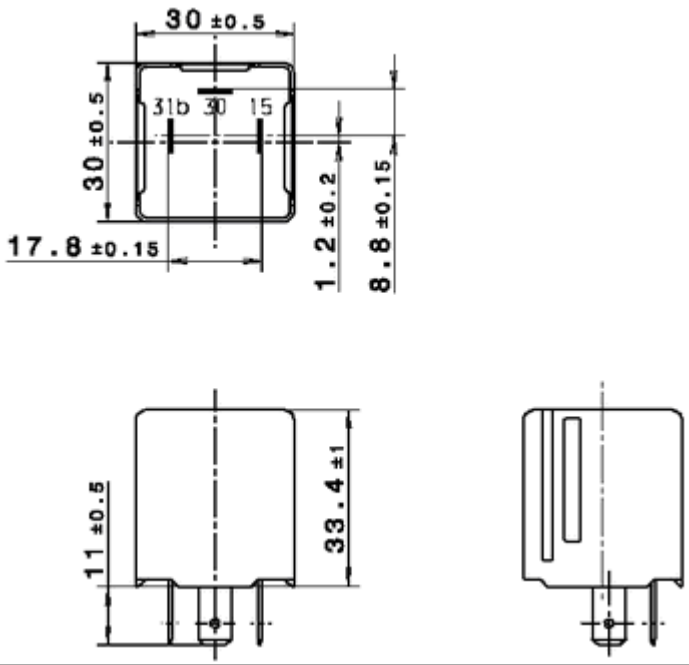
Internal Electrical Schematic:	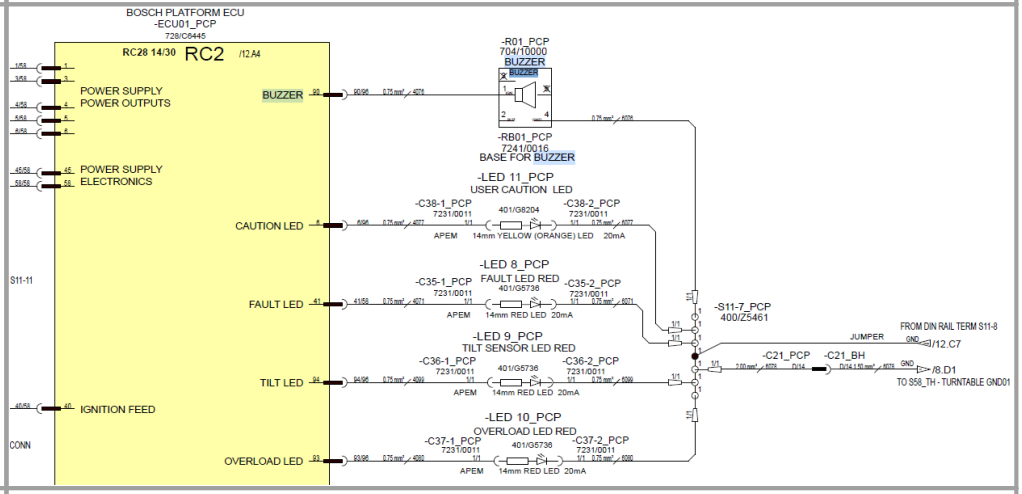
Testing:	Important: Use the multi-meter on the harness connector pins. DO NOT USE the meter on the ECU pins 1. There are two buzzer fitted on machine one is inside base control panel and another is inside platform control panel. Ensure no water ingress 2. Check supply at connector R01_TCP pin no 1 & 4 This should read 12V 3. If there is no supply check wiring as per the schematic 4. If there is supply on harness there may be internal damage to buzzer Note-Remove the buzzer from its holder and wire to 12V and GND signals and the buzzer should sound
Expected Values:	12V

© 2026 JCB INDIA LTD

Related Fault Codes:	Fault Code	Fault Description
	B1269-16 824	Buzzer platform - Circuit short to low
	B1270-17 825	Buzzer platform - Circuit open or short to high (12v)

4.40.6 Drive and Steer Joystick

Drive and Steer Joystick

Components 134 > Platform & Control Panel 312 > Drive and Steer Joystick

Component:	Drive and Steer Joystick
Function:	•This Joystick is used for Drive and Steer functions. •This is a proportional Single axis joystick with additional buttons on top •Y axis = Drive forward and backward control •Buttons on top - Left and Right steer control
Location:	The Drive joystick is located RHS on the platform control panel

© 2026 JCB INDIA LTD

Location Image:

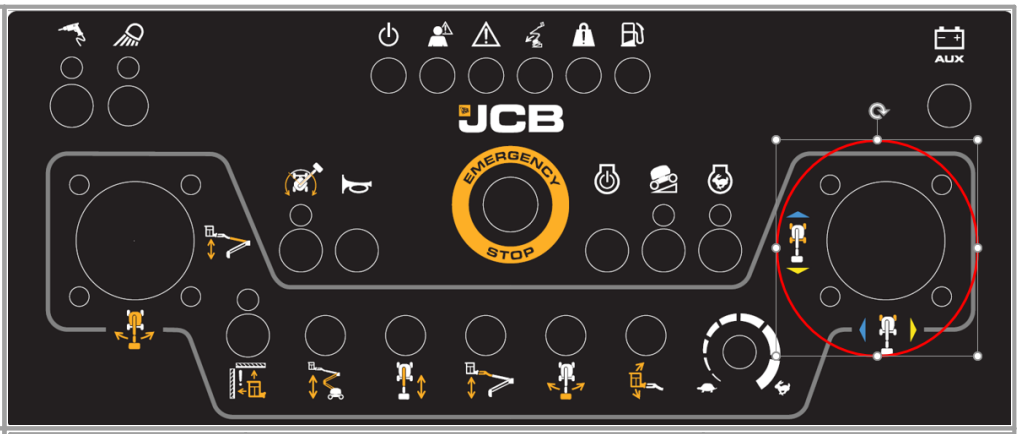

Signal:

Pin Number	Description	Wire Number
1	GND	6068
2	+5V	4068,4069
3	Not Used	Not Used
4	Drive Signal	4073
5	Steer Signal	4072

Wires & Connectors :



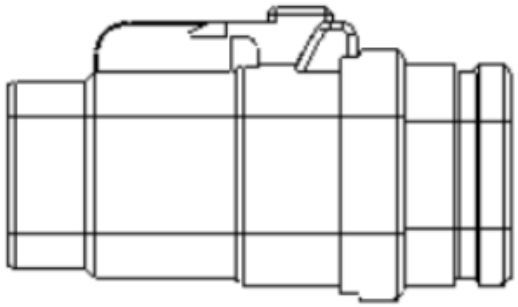

7216/0021 6 Way Connector

© 2026 JCB INDIA LTD

Internal

Electrical

Schematic:

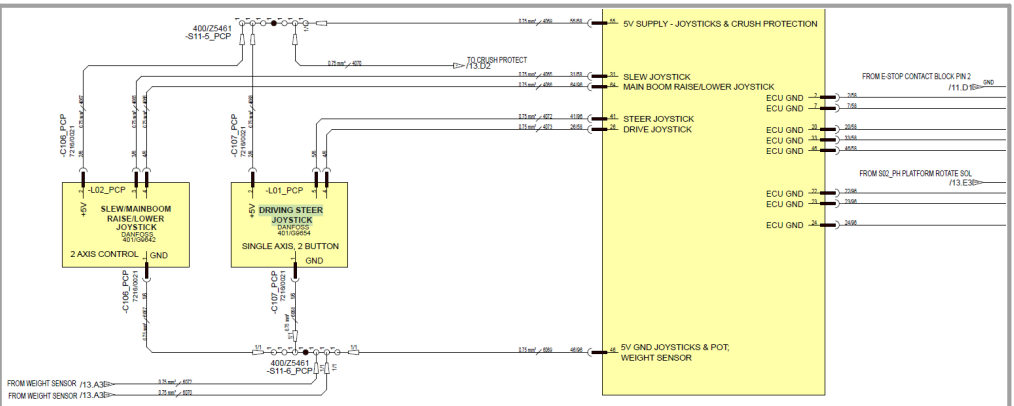

Testing:

Important: Use the multi-meter on the harness connector pins. DO NOT USE the meter on the ECU pins

1.Note- Drive and steer is a single axis joystick with 2 buttons on the top for steer. This switch is of

5V hence be careful there is no protection on this input if over 5v goes it will break and

damage beyond repair.

1. There are 4 wires, 2 input and 2 output, 2 inputs are 5V and 5V ground

2. The 2 outputs are one for steer and one for drive.

3. Make sure joystick is fitted properly so no water ingress.

4. Check supply at C107 (Pin 1 & 2). It should read 5V. If there is no 5V then investigate wiring as per schematic.

© 2026 JCB INDIA LTD

	5. Joystick on center position. Check voltage on connector C107 (Pin 5) & also at C107 (Pin4). It should read 2.5V. There is 8% tolerance deadband at centre position. 6. Voltage changes from 0.5V to 4.5 V after moving joystick. 7. If Input voltage OK then it may be internal damage inside the joystick. 8. Replace it
Expected Values:	See Signal
Related Fault Codes:	**Fault Code** / **Description** B1069-17 615 — Drive joystick - Circuit short to high (5v) B1070-16 617 — Drive joystick - Circuit open or short to low B1146-17 704 — Steer joystick - Circuit short to high (5v) B1147-16 705 — Steer joystick - Circuit open or short to low

4.40.7 Slew & Main Boom Up/Down Joystick



© 2026 JCB INDIA LTD

Components 134 > Platform & Control Panel 312 > Slew & Main Boom Up/Down Joystick

Component :	Slew & Main Boom Up/Down Joystick
Function:	•This joystick is for Main Boom Lift and Slew control of the machine •The joystick gives proportional control of the functions of 2 Axis •X Axis = Slew control •Y Axis = Main boom control
Location:	The joystick is located on the LHS of the platform control panel.
Location Image:	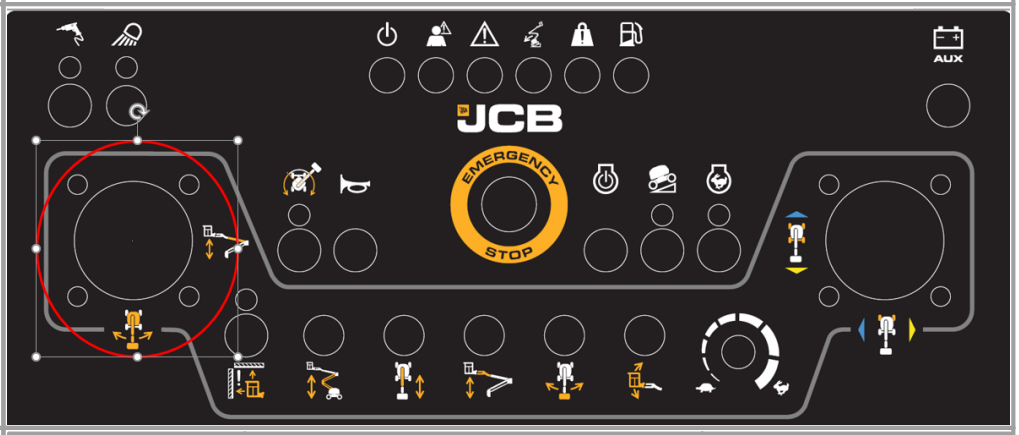

Signal:

Pin Number	Description	Wire Number
1	GND	6067
2	+5V	4067
3	Slew Signal	4065
4	Main Boom Signal	4066
5	Not Used	Not Used
6	Not Used	Not Used

© 2026 JCB INDIA LTD

Wires & Connectors :	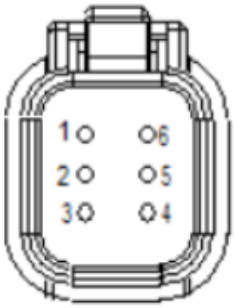 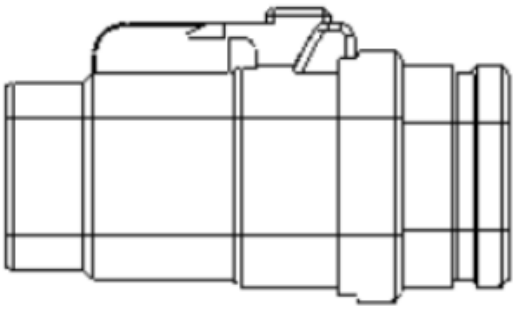 7216/0021 6 Way Connector
Internal Electrical Schematic:	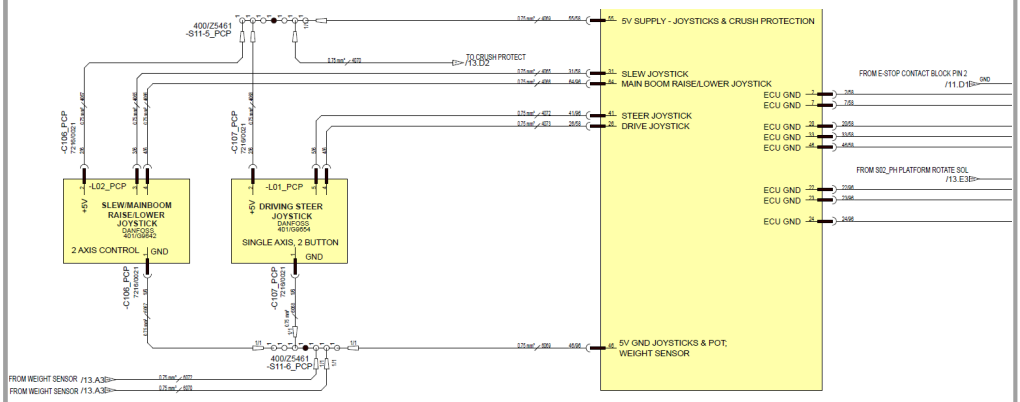
Testing:	Important: Use the multi-meter on the harness connector pins. DO NOT USE the meter on the ECU pins 1. Note- Slew & main boom raise and lower joystick is double axis joystick. 5V hence be careful there is no protection on this input if over 5v goes it will break and damage beyond repair. 1. There are 4 wires, 2 input and 2 output, 2 inputs are 5V and 5V ground 2. The 2 outputs are one for slew & one for main boom. 3. Make sure joystick is fitted properly and there is no water ingress. 4. Check supply at C106 (Pin 1 & 2). It should read 5V. If there is no 5V then investigate wiring as per schematic. 5. Joystick on center position. Check voltage on connector C106 (Pin 3) & also at C106 (Pin4). It should read 2.5V. 6. Voltage changes from 0.5V to 4.5 V after moving joystick. 7. If Input voltage OK then it may be internal damage inside the joystick. 8. Replace it

© 2026 JCB INDIA LTD

Expected Values:	See Signal
Related Fault Codes:	

Fault Code	Description
B1148-17 706	Main boom joystick - Circuit short to high (5v)
B1149-16 708	Main boom joystick - Circuit open or short to low
B1150-17 709	Slew joystick - Circuit short to high (5v)
B1151-16 710	Slew joystick - Circuit open or short to low

4.40.8 Main Boom Telescope Extend/Retract Switch(PCP)

Main Boom Telescope Extend/Retract Switch(PCP)

Components 134 > Platform & Control Panel 312 > Main Boom Telescope Extend/Retract Switch(PCP)

Component:	Main Boom Telescope Extend/Retract Switch(PCP)
Function:	•This switch is to operate the main boom telescope in either extend or retract positioning from the platform control station. •This switch is and on-off-on switch. •The foot pedal is required to enable operation

© 2026 JCB INDIA LTD

Location: On Platform Control Box

Location Image:

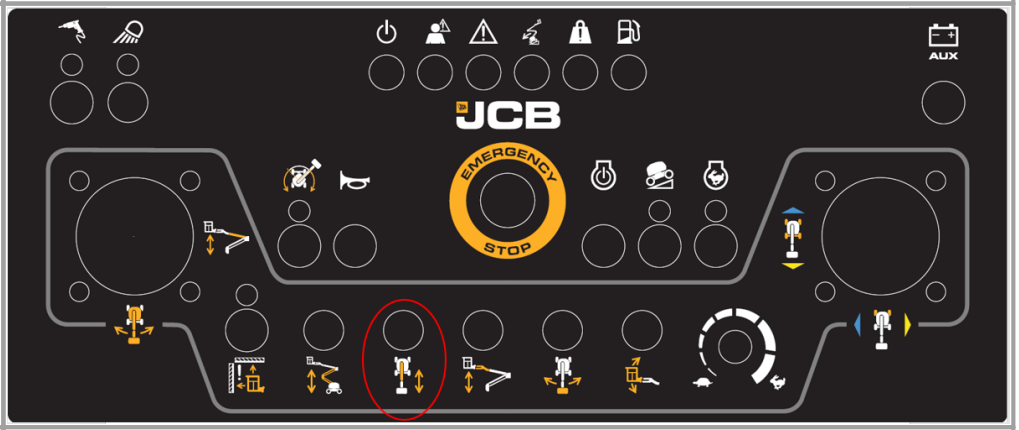

Signal:

Pin Number	Description / Signal	Connector number	Wire number(s)	Voltage with switch unpressed	Voltage with switch pressed
1	Telescope Retract	C300-1_PCP	75	2.7 V	10V
2	Power in (10V)	C300-2_PCP	1074	10V	NA
3	Telescope Extend	C300-3_PCP	74	2.7V	10V

© 2026 JCB INDIA LTD

Wires & Connectors :	 
Internal Electrical Schematic:	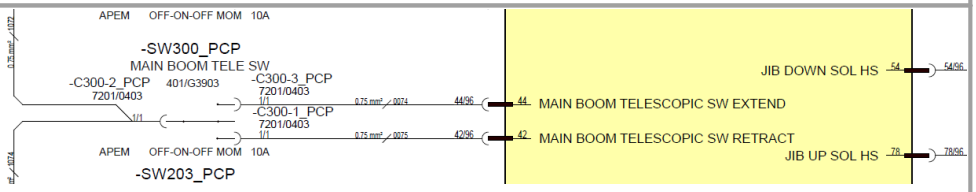
Testing:	Important: Use the multi-meter on the harness connector pins. DO NOT USE the meter on the ECU pins. 1. There are 3 contact on the back of switch.

© 2026 JCB INDIA LTD

	2. Check terminal 1, 2 & 3 connected correctly with wiring harness terminal 1,2 & 3 respectively. 3. Terminal 2 is for incoming supply 4. Check continuity between terminal 2 & terminal 3 and terminal 2 & terminal 1. It should not buzz 5. When switch is pressed up. Terminal 2 should buzz with bottom terminal & when switch is pressed down. Terminal 2 should buzz with up terminal. 6. Check supply at terminal 2. It should read 10V. 7. If there is no 10V then investigate wiring as per schematic. 8. If there is 10V available and continuity is OK then it should be internal damage to switch. Replace it
Expected Values:	12V
Related Fault	

Fault Code	Description
B1252-17 804	MAIN BOOM TELESCOPE EXTEND Switch SC to High
B1253-17 805	MAIN BOOM TELESCOPE RETRACT Switch SC to High
B1254-92 806	MAIN BOOM TELESCOPE EXTEND & RETRACT Switches both activated (5 - 10V)
B1255-16 807	MAIN BOOM TELESCOPE EXTEND Switch SC to Low

© 2026 JCB INDIA LTD

Codes:	B1256-16 808 MAIN BOOM TELESCOPE RETRACT Switch SC to Low

4.40.9 Articulated Raise/Lower Switch(PCP)

Articulated Raise/Lower Switch(PCP)

Components 134 > Platform & Control Panel 312 > Articulated Raise/Lower Switch(PCP)

Component:	Articulated Raise/Lower Switch(PCP)
Function:	•This switch is to operate the Articulated boom in either raise or lower positioning. •This switch is and on-off-on switch. •The foot switch is required to enable operation
Location:	On Platform Control Box

© 2026 JCB INDIA LTD

Location Image:

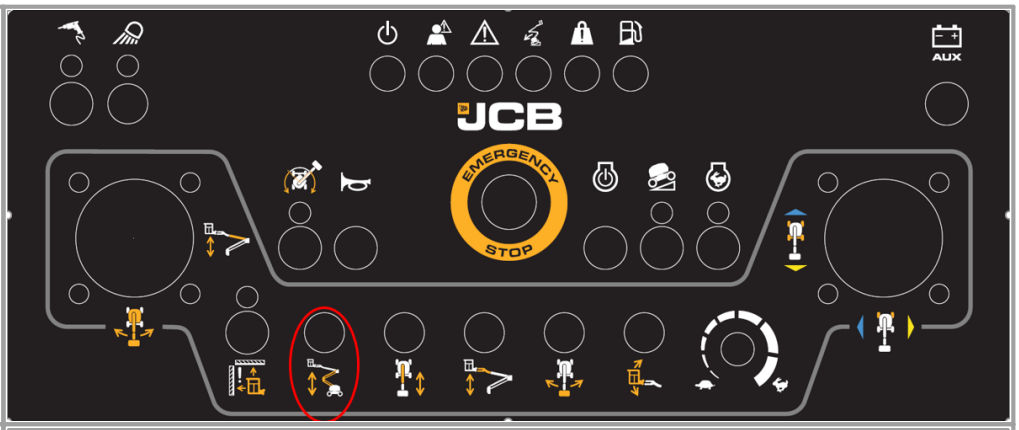

Signal:

Pin Number	Description/ Signal	Connector number	Wire number(s)	Voltage with switch unpressed	Voltage with switch pressed
1	Artic boom raise	C201-1_PCP	73	3.4 V	10V
2	Power in (10V)	C201-2_PCP	1072	10V	NA
3	Artic boom lower	C201 -3_PCP	72	2.7V	10V

© 2026 JCB INDIA LTD

Wires & Connectors :	

© 2026 JCB INDIA LTD



Internal

Electrical

Schematic:

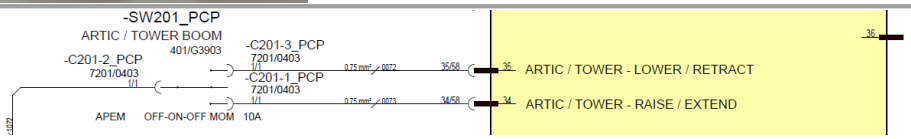

Testing:

Important: Use the multi-meter on the harness connector pins. DO NOT USE the meter on the ECU pins.

1. There are 3 contact on the back of switch.

. 2Check terminal 1, 2 & 3 connected correctly with wiring harness terminal 1,2 & 3 respectively.

3. Terminal 2 is for incoming supply

© 2026 JCB INDIA LTD

<table>
<tr><td></td><td>4. Check continuity between terminal 2 & terminal 3 and terminal 2 & terminal 1. It should not buzz

5. When switch is pressed up. Terminal 2 should buzz with bottom terminal & when switch is pressed down. Terminal 2 should buzz with up terminal.

6. Check supply at terminal 2. It should read 10V.

7. If there is no 10V then investigate wiring as per schematic.

8. If there is 10V available and continuity is OK then it should be internal damage to switch. Replace it.</td></tr>
<tr><td>Expected Values:</td><td></td></tr>
<tr><td>Related Fault Codes:</td><td>
<table>
<tr><th>Fault Code</th><th>Description</th></tr>
<tr><td>B1247-17</td><td>ARTICULATED BOOM RAISE Switch SC to High</td></tr>
<tr><td>B1248-17</td><td>ARTICULATED BOOM LOWER Switch SC to High</td></tr>
<tr><td>B1249-92</td><td>ARTICULATED BOOM RAISE & LOWER Switches both activated (5 - 10V)</td></tr>
<tr><td>B1250-16</td><td>ARTICULATED BOOM RAISE Switch SC to Low</td></tr>
</table>
</td></tr>
</table>

© 2026 JCB INDIA LTD

	B1251-16	ARTICULATED BOOM LOWER Switch SC to Low

4.40.10 Jib Up/Down Switch(PCP)

Jib Up/Down Switch(PCP)

Components 134 > Platform & Control Panel 312 > Jib Up/Down Switch(PCP)

Component:	Jib Up/Down Switch(PCP)
Function:	•This switch is to operate the jib in either raise or lower positioning from the platform control station. •This switch is and on-off-on switch. •The foot pedal is required to enable operation
Location:	On Platform Control Box
Location Image:	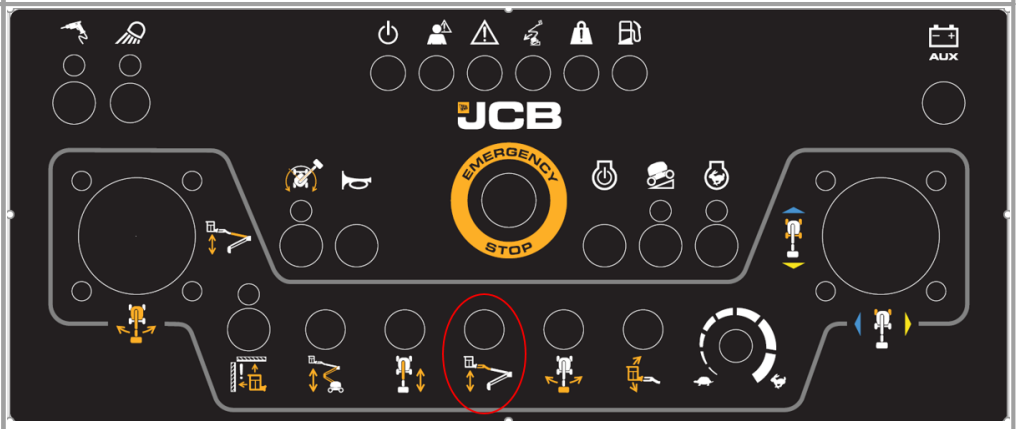

© 2026 JCB INDIA LTD



Signal:

Pin Number	Description/ Signal	Connector number	Wire number(s)	Voltage with switch unpressed	Voltage with switch pressed
1	Jib Lower	C203-1_PCP	76	2.7 V	10V
2	Power in (10V)	C203-2_PCP	1076	10V	NA
3	Jib Raise	C203-3_PCP	77	2.7V	10V

© 2026 JCB INDIA LTD

Wires & Connectors :	 

© 2026 JCB INDIA LTD

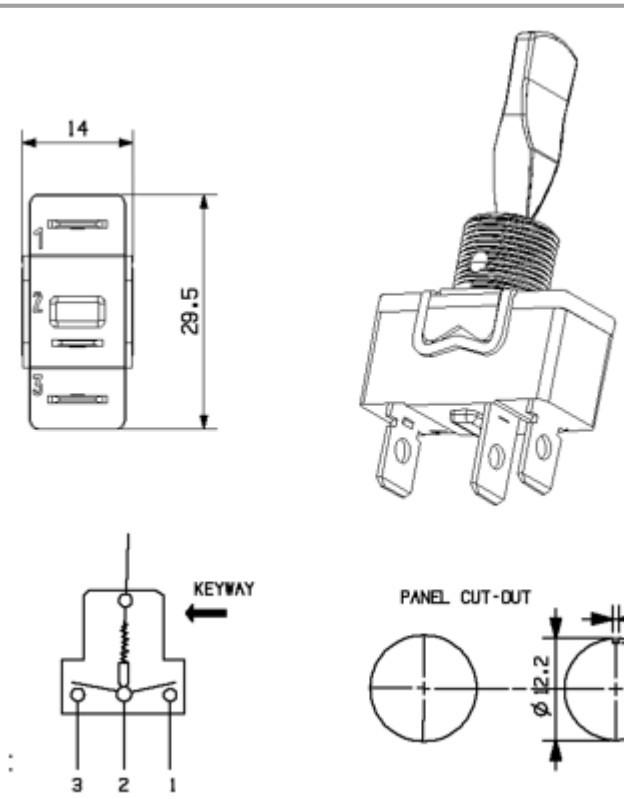

Internal Electrical Schematic:

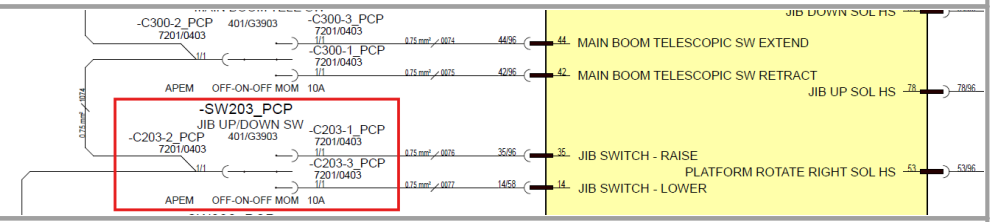

Testing:

Important: Use the multi-meter on the harness connector pins. DO NOT USE the meter on the ECU pins

1. There are 3 contact on the back of switch.
2. Check terminal 1, 2 & 3 connected correctly with wiring harness terminal 1,2 & 3 respectively.
3. Terminal 2 is for incoming supply
4. Check continuity between terminal 2 & terminal 3 and terminal 2 & terminal 1. It should not buzz
5. When switch is pressed up. Terminal 2 should buzz with bottom terminal & when switch is pressed down. Terminal 2 should buzz with up terminal.
6. Check supply at terminal 2. It should read 10V.
7. If there is no 10V then investigate wiring as per schematic.
8. If there is 10V available and continuity is OK then it should be internal damage to switch. Replace it.

© 2026 JCB INDIA LTD

Expected Values:	12V
Related Fault Codes:	

Fault Code	Description
B1262-17 815	Jib boom platform switch raise function - Circuit short to high (10v)
B1263-17 816	Jib boom platform switch lower function - Circuit short to high (10v)
B1264-92 817	Jib boom platform switch both functions - Signal plausibility failure (10v)
B1265-16 818	Jib boom platform switch raise function - Circuit short to low
B1266-16 819	Jib boom platform switch lower function - Circuit short to low

4.40.11 Platform Rotate Left/Right Switch(PCP)

Platform Rotate Left/Right Switch(PCP)

Components 134 > Platform & Control Panel 312 > Platform Rotate Left/Right Switch(PCP)

Component :	Platform Rotate Left/Right Switch(PCP)
Function:	•This switch is to operate the platform rotate in either left or right positioning from the platform control station. •This switch is and on-off-on switch. •The foot pedal is required to enable operation

© 2026 JCB INDIA LTD

Location: On Platform Control Box

Location Image:

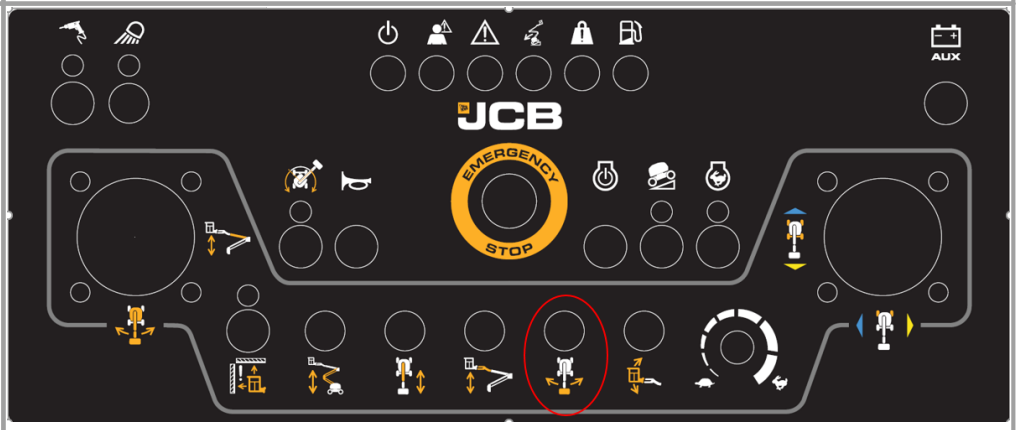



Signal:

Pin Number	Description/ Signal	Connector number	Wire number(s)	Voltage with switch unpressed	Voltage with switch pressed
1	platform rotate right	C202-1_PCP	79	2.7 V	10V
2	Power in (10V)	C202-2_PCP	1078	10V	NA

© 2026 JCB INDIA LTD

	3	platform rotate left	C202- 3_PCP	78	3.4 V	10V

© 2026 JCB INDIA LTD

Wires & Connectors :





© 2026 JCB INDIA LTD

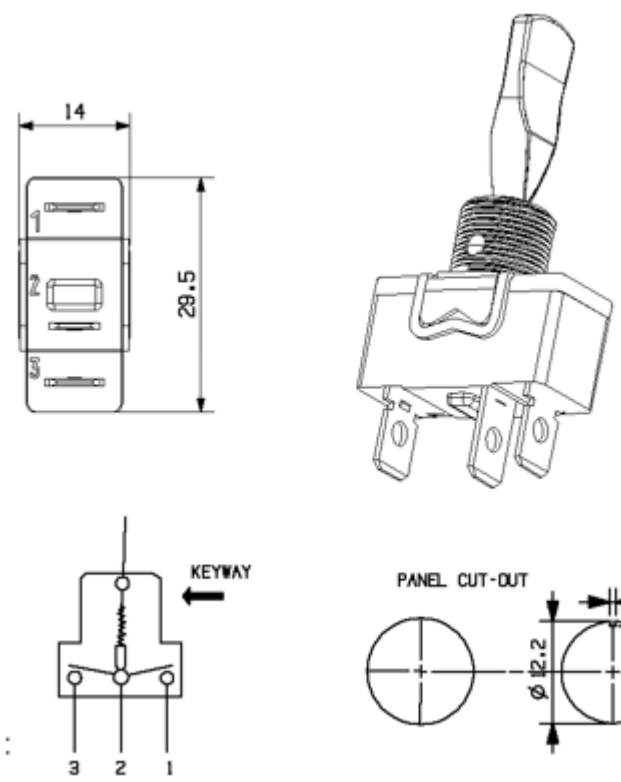

Internal

Electrical

Schematic:

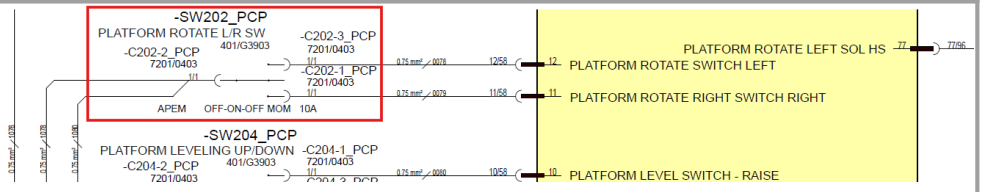

Testing:

Important: Use the multi-meter on the harness connector pins. DO NOT USE the meter on the ECU pins

1. There are 3 contact on the back of switch.

© 2026 JCB INDIA LTD

	2. Check terminal 1, 2 & 3 connected correctly with wiring harness terminal 1,2 & 3 respectively. 3. Terminal 2 is for incoming supply 4. Check continuity between terminal 2 & terminal 3 and terminal 2 & terminal 1. It should not buzz 5. When switch is pressed up. Terminal 2 should buzz with bottom terminal & when switch is pressed down. Terminal 2 should buzz with up terminal. 6. Check supply at terminal 2. It should read 10V. 7. If there is no 10V then investigate wiring as per schematic. 8. If there is 10V available and continuity is OK then it should be internal damage to switch. Replace it
Expected Values:	12V
Related Fault	

Fault Code	Fault Description
B1257-17 809	Platform rotate platform switch right function - Circuit short to high (10v)
B1258-17 810	Platform rotate platform switch left function - Circuit short to high (10v)
B1259-92 811	Platform rotate platform switch both functions - Signal plausibility failure (10v)
B1260-16 813	Platform rotate platform switch right function - Circuit short to low

© 2026 JCB INDIA LTD

Codes:	B1261-16 814	Platform rotate platform switch left function - Circuit short to low

4.40.12 Platform Leveling Up/Down Switch(PCP)

Platform Leveling Up/Down Switch(PCP)

Components 134 > Platform & Control Panel 312 > Platform Leveling Up/Down Switch(PCP)

Component:	Platform Leveling Up/Down Switch(PCP)
Function:	•This switch is to operate the platform leveling in either raise or lower positioning from the platform control station. •This switch is and on-off-on switch. •The foot pedal is required to enable operation.
Location:	On Platform Control Box
Location Image:	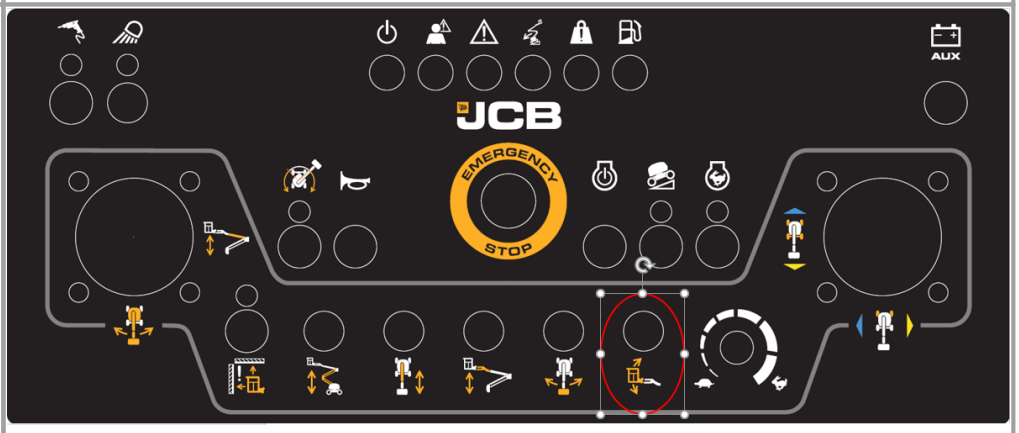

© 2026 JCB INDIA LTD



Signal:

Pin Number	Description/ Signal	Connector number	Wire number(s)	Voltage with switch unpressed	Voltage with switch pressed
1	Leveling raise	C204-1_PCP	80	2.7 V	10V
2	Power in (10V)	C204-2_PCP	1080	10V	NA
3	Leveling lower	C204-3_PCP	81	2.7V	10V

© 2026 JCB INDIA LTD

Wires & Connectors :	 

© 2026 JCB INDIA LTD

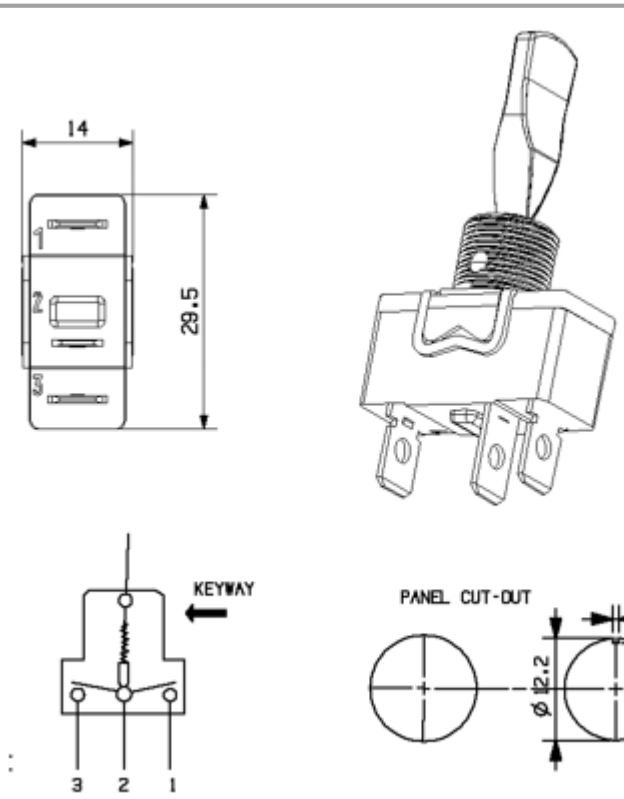

Internal Electrical Schematic:

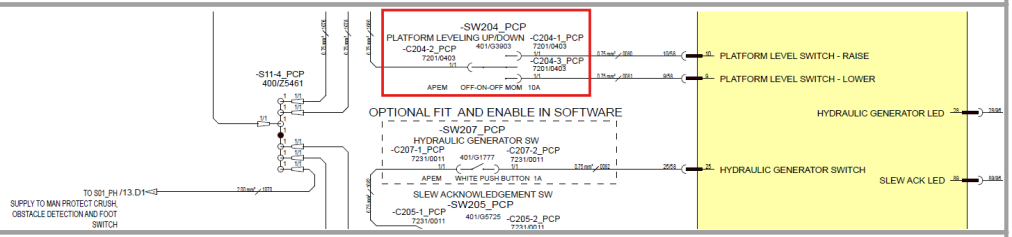

Testing:

Important: Use the multi-meter on the harness connector pins. DO NOT USE the meter on the ECU pins

1. There are 3 contact on the back of switch.
2. Check terminal 1, 2 & 3 connected correctly with wiring harness terminal 1,2 & 3 respectively.
3. Terminal 2 is for incoming supply
4. Check continuity between terminal 2 & terminal 3 and terminal 2 & terminal 1. It should not buzz
5. When switch is pressed up. Terminal 2 should buzz with bottom terminal & when switch is pressed down. Terminal 2 should buzz with up terminal.
6. Check supply at terminal 2. It should read 10V.
7. If there is no 10V then investigate wiring as per schematic.
8. If there is 10V available and continuity is OK then it should be internal damage to switch. Replace it.

© 2026 JCB INDIA LTD

Expected Values:	12V
Related Fault Codes:	<table><tr><th>Fault Code</th><th>Description</th></tr><tr><td>B1242 -17 793</td><td>Platform level platform switch raise function - Circuit short to high (10v)</td></tr><tr><td>B1243 -17 794</td><td>Platform level platform switch lower function - Circuit short to high (10v)</td></tr><tr><td>B1244 -92 795</td><td>Platform level platform switch both functions - Signal plausibility failure (10v)</td></tr><tr><td>B1245 -16 796</td><td>Platform level platform switch raise function - Circuit short to low</td></tr><tr><td>B1246 -16 797</td><td>Platform level platform switch lower function - Circuit short to low</td></tr></table>

4.40.13 Potentiometer

Potentiometer

Components 134 > Platform & Control Panel 312 > Potentiometer

Component:	Potentiometer
Function:	•The potentiometer is used to alter the speeds of the machine functions by the operator. •This will only effect controls at the platform control panel.
Location:	On Platform Control Box

© 2026 JCB INDIA LTD

Location Image:

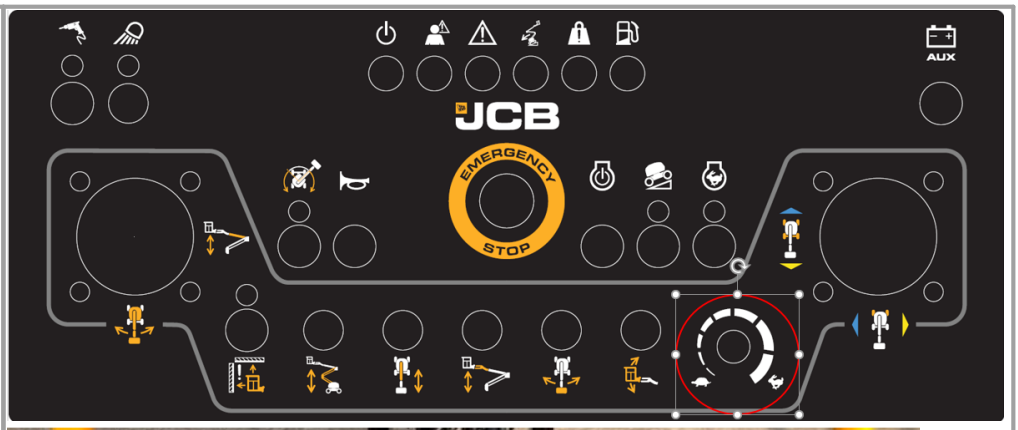



Signal:

Pin Number	Description	Wire Number
1	5V GND	6074
2	Signal output	4075
3	5V +VE feed	4074

Wires & Connectors :

The potentiometer has 3 fully insulated push on terminals that mate with the potentiometer connections



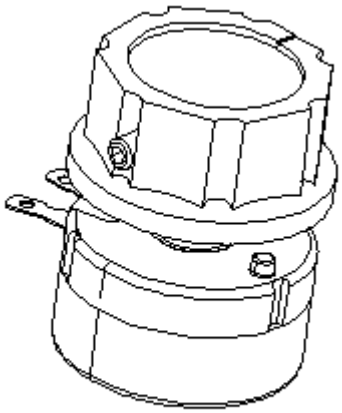

ISO VIEW

© 2026 JCB INDIA LTD

Internal Electrical Schematic:	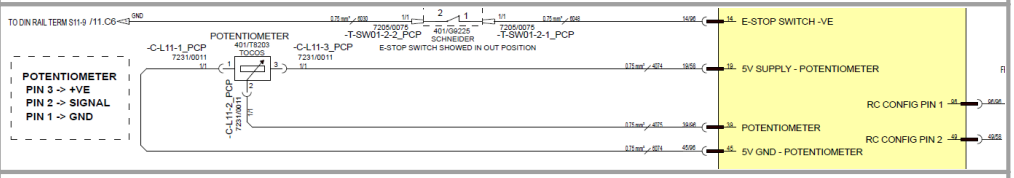
Testing:	Important: Use the multi-meter on the harness connector pins. DO NOT USE the meter on the ECU pins 1. Ensure no water ingress inside the potentiometer fitted on platform control panel plate 2. Check Pin3 (C-L11-3) for positive, Pin 2 (C-L11-2) signal , Pin 1 C-L11-1) is input ground The potentiometer is a voltage divider circuit as shown below 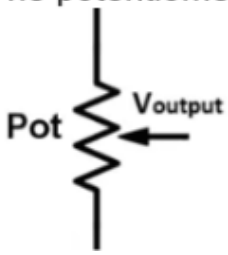 3. Check the voltage at Pin 2 (C-L11-2) & Pin 1 (C-L11-1) it should vary by rotating the potentiometer knob (should be between 0.5V to 4.5V) 4. If it is not varying check the supply voltage between Pin C-L11-1 Pin 1 C-L11-3. This should read 5V 5. If there is no input voltage then investigate wiring as per schematic 6. If input voltage is available and out put voltage is not , it might be internal damage to potentiometer , replace it.
Expected Values:	1.Output of Potentiometer in min position = 10% 2.Output of Potentiometer in max position = 100 % 3.Output of Potentiometer when kept in between = > 10%
Related Fault Codes:	**Fault Code** / **Fault Description** B1067-17 614 / Potentiometer - Circuit short to high (5.5v)

© 2026 JCB INDIA LTD

4.40.14 Slew Acknowledgement Switch with LED

Slew Acknowledgement Switch with LED

Components 134 > Platform & Control Panel 312 > Slew Acknowledgement Switch with LED

Component:	Slew Acknowledgment Switch with LED
Function:	•The push button is so the operator can acknowledge that the machine has been slewed around and the drive/ steer directions may be reverse. •All drive operation will be cut until the operator has enabled this button. •The LED above the switch will flash to show the operator that it is required •The button is a momentary push button.
Location:	On Platform Control Box
Location Image:	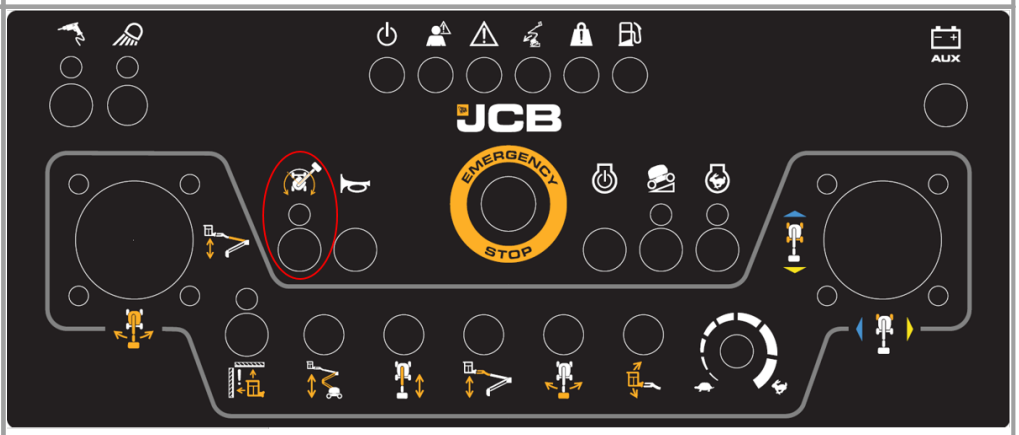 

© 2026 JCB INDIA LTD

Signal:

Pin Number	Description	Connector number	Wire number	Voltage unpressed	Voltage pressed
1	10V Feed In	C205-1	1083	10V	NA
2	Signal to ECU (10V when pressed)	C205-2	83		10V

© 2026 JCB INDIA LTD

Wires & Connectors :

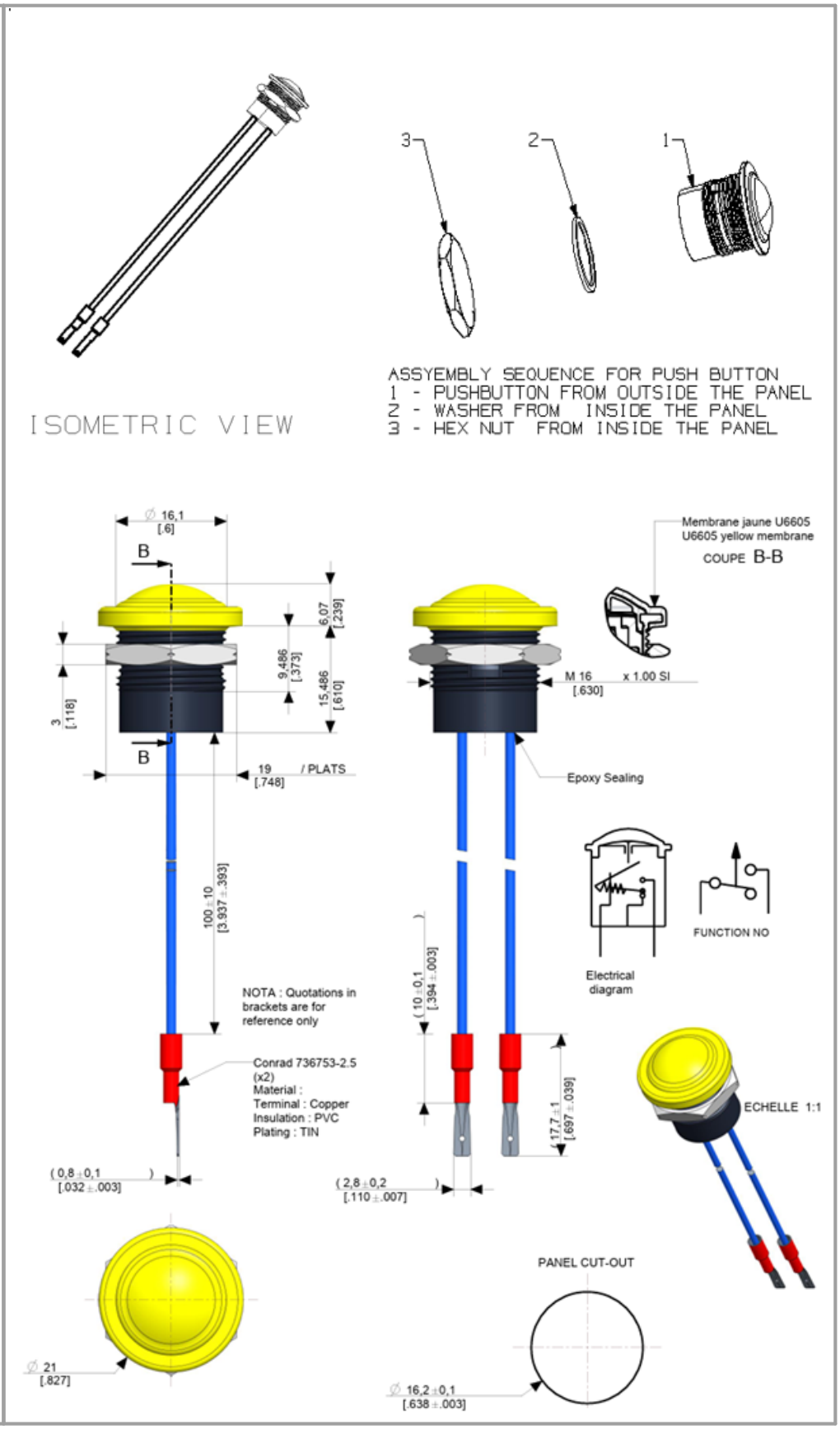

© 2026 JCB INDIA LTD

Internal Electrical Schematic:	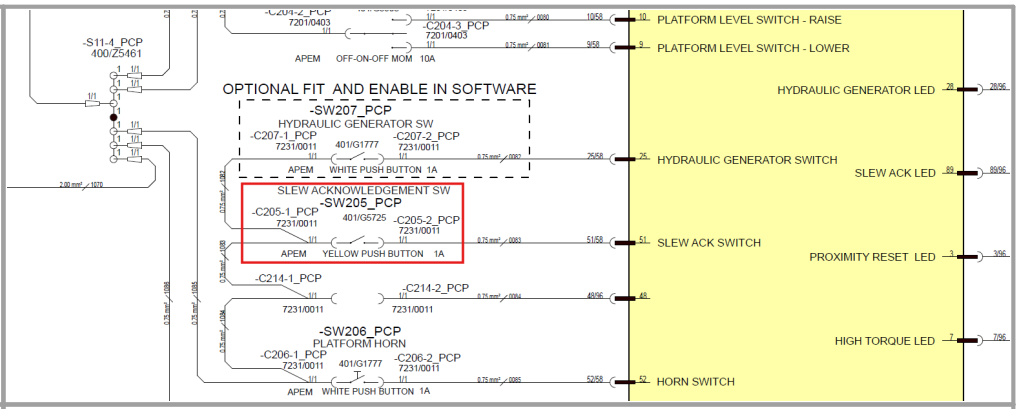
Testing:	Important: Use the multi-meter on the harness connector pins. DO NOT USE the meter on the ECU pins 1. Note-All the bush button fitted on machine are 10V ,normally open and closed when pressed Diagnostic feedback on push button are coming from ECU 1. Check supply at wiring harness terminal-1 with (respect to ground) on push button (when not pressed). It should read 10V. 2. Check the voltage at wiring harness terminal-2 on push button (When not pressed). It should read 2-3V 3. Check the continuity between terminal 1 & 2 after pressing the push button. It should buzz. 4. If there is continuity and we are getting 10V supply then it may be internal damage to push button. 5. If issue still there replace the push button.
Expected Values:	12V
Related Fault Codes:	

Fault Code	Fault Description
B1064 -17 611	Slew acknowledgment button - Circuit short to high (10v)
B1065 -16 612	Slew acknowledgment button - Circuit short to low
B1066 -24 613	Slew acknowledgment button - Signal stuck high
B1198 -16 748	Slew acknowledgment LED - Circuit short to low
B1199 -17 750	Slew acknowledgment LED - Circuit short to high (12v)

© 2026 JCB INDIA LTD

4.40.15 Horn Switch(PCP)

Horn Switch(PCP)

Components 134 > Platform & Control Panel 312 > Horn Switch(PCP)

Component:	Horn Switch(PCP)
Function:	•Horn switch is for audible warning that the operator can use •The horn is located at the base of the machine.
Location:	On Platform Control Box
Location Image:	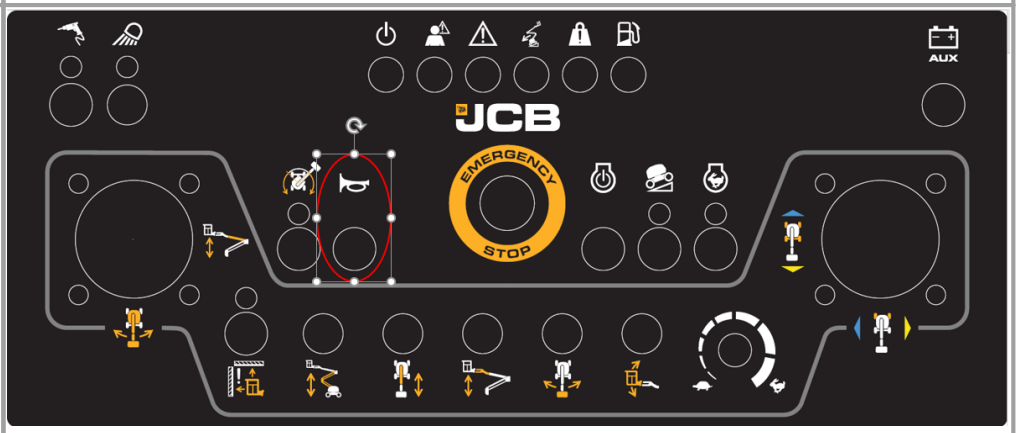 
Signal:	**Pin Number** | **Description** | **Connector number** | **Wire number(s)** | **Voltage unpressed** | **Voltage pressed**

© 2026 JCB INDIA LTD

	1	10V input	C206-1_PCP	1085	10V	NA
	2	Signal output to ECU (10V when pressed)	C206-2_PCP	85		10V
Wires & Connectors :	 ISOMETRIC VIEW 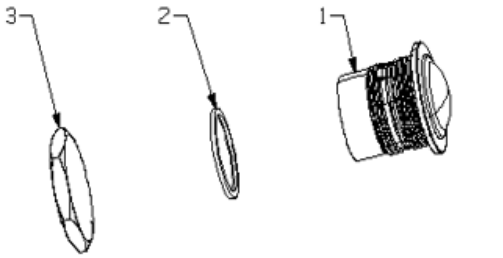 ASSYEMBLY SEQUENCE FOR PUSH BUTTON 1 - PUSHBUTTON FROM OUTSIDE THE PANEL 2 - WASHER FROM INSIDE THE PANEL 3 - HEX NUT FROM INSIDE THE PANEL					

© 2026 JCB INDIA LTD

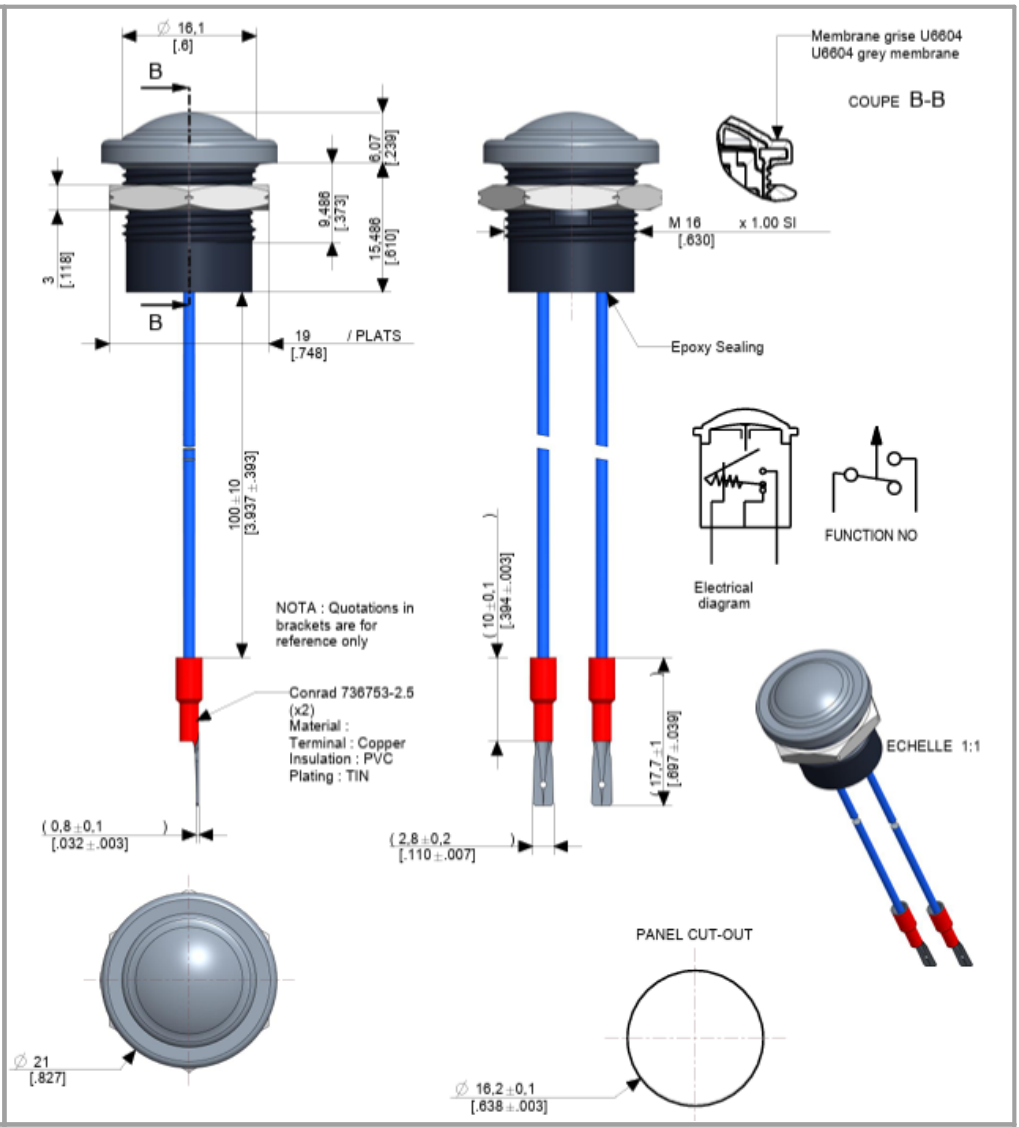

Internal Electrical Schematic:

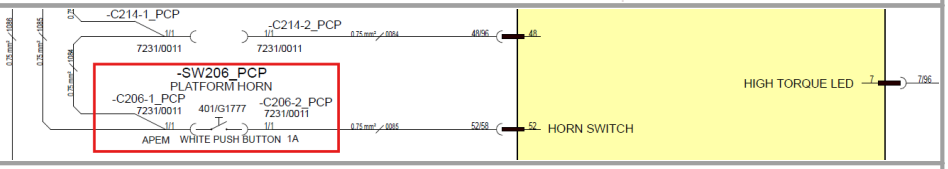

Testing:

1. Check horn button in platform is not stuck on remove horn button and check continuity.
2. Check wire code 0085 for voltage.

Expected Values:

12V

Related Fault Codes:

Fault Code	Fault Description
B1273-17 828	Horn platform button - Circuit short to high (10v)

© 2026 JCB INDIA LTD

	B1274-16 829	Horn platform button - Circuit short to low
	B1275-24 830	Horn platform button - Signal stuck high

4.40.16 Emergency Stop Switch(PCP)

Emergency Stop Switch(PCP)

Components 134 > Platform & Control Panel 312 > Emergency Stop Switch(PCP)

Component:	Emergency Stop Switch(PCP)
Function:	•The E-stop is there for the operator to stop any functioning with immediate action. •This will stop all functions at the base and platform controls stations. •The E-stop will cut the engine but it is not to be used to power down the machine. The machine is still powered on with the E-stop pressed. •The E-stop uses x2 NC contacts that open when pressed.
Location:	On Platform Control Box
Location Image:	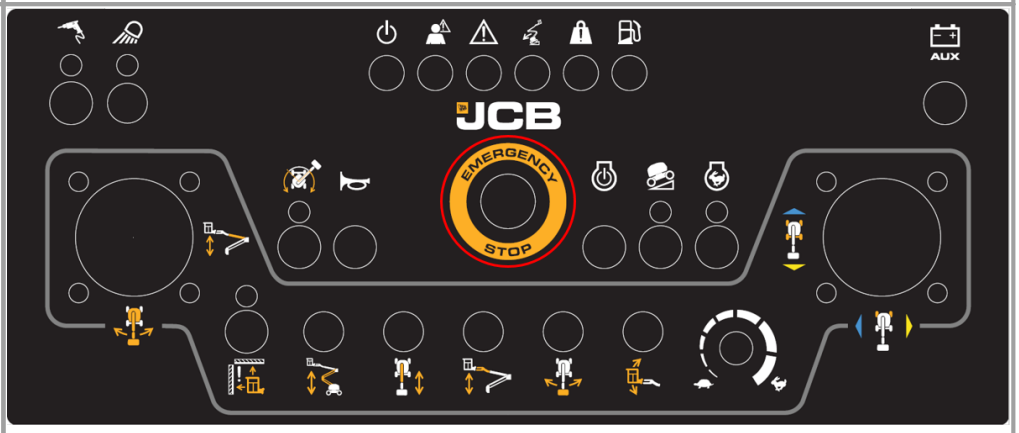

© 2026 JCB INDIA LTD



Signal:

Pin Number and contactor block	Description	Connector number	Wire number	Voltage unpressed	Voltage pressed
contact 1 NC pin 1	12V feed	T-SW-01-1-1_PCP	3041	12V	NA
contact 1 NC pin 2	Output to platform ECU	T-SW-01-1-2_PCP	3043		12V
contact 2 NC pin 1	GND feed	T-SW-01-2-2_PCP	6030	GND	NA
contact 2 NC pin 2	Output to ECU	T-SW-01-2-1_PCP	6048		GND

Wires & Connectors :

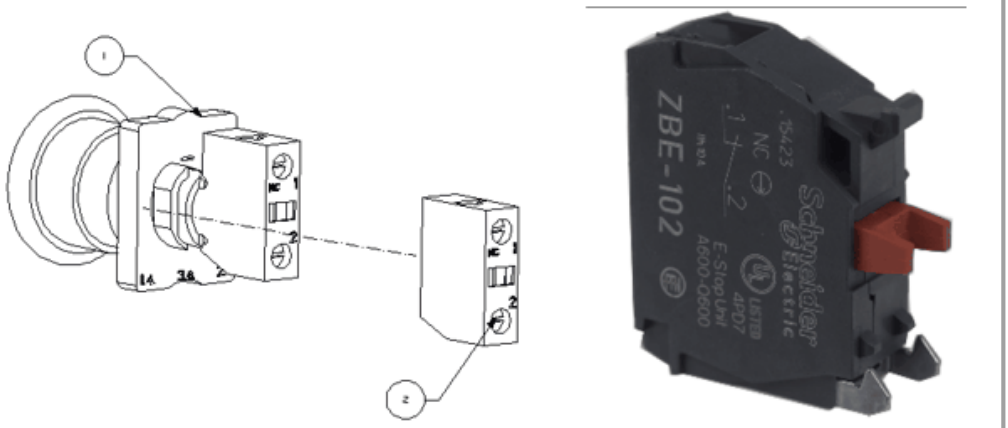

Internal Electrical Schematic:

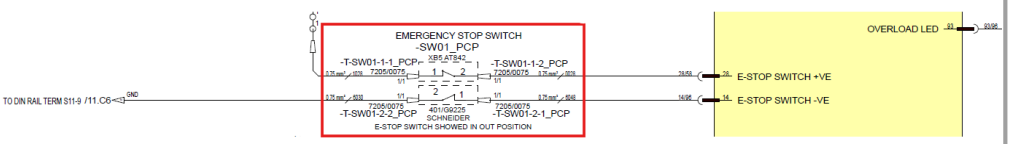

Testing:

Important: Use the multi-meter on the harness connector pins. DO NOT USE the meter on the ECU pins

1. Do the below steps for both contacts separately.
2. Take multimeter and check the multi meter is working
3. Set the multimeter in continuity mode (Sound wave or Diode or both)

© 2026 JCB INDIA LTD

	4. Place the red probe on one of the terminal on the switch and black probe on other terminal on the switch 5. In E-Stop switch in PUSHED IN state, Multimeter should read as 'OL' (open circuit) 6. In E-Stop switch in OUT state, Multimeter should read as '1' or less. 7. Operate the switch in PUSHED IN and OUT state in few more times. Multimeter reading should change while operating from PUSHED IN to OUT. If the reading doesn't change means E-Stop switch is defective 8. Replace the defective E-Stop switch with same type and size, please contact JCB Service department.
Expected Values:	12V
Related Fault Codes:	**Fault Code** / **Fault Description** B1235-17 785 / E-stop platform button - Signal plausibility failure

4.40.17 Engine Start Switch(PCP)



Components 134 > Platform & Control Panel 312 > Engine Start Switch(PCP)

Component:	Engine Start Switch(PCP)
Function:	•This button is used to start the engine on the machine. •The ignition key must be in the on position, and platform enabled (default position) •The foot pedal should NOT be pressed to make an engine start.
Location:	On Platform Control Box

© 2026 JCB INDIA LTD

Location Image:

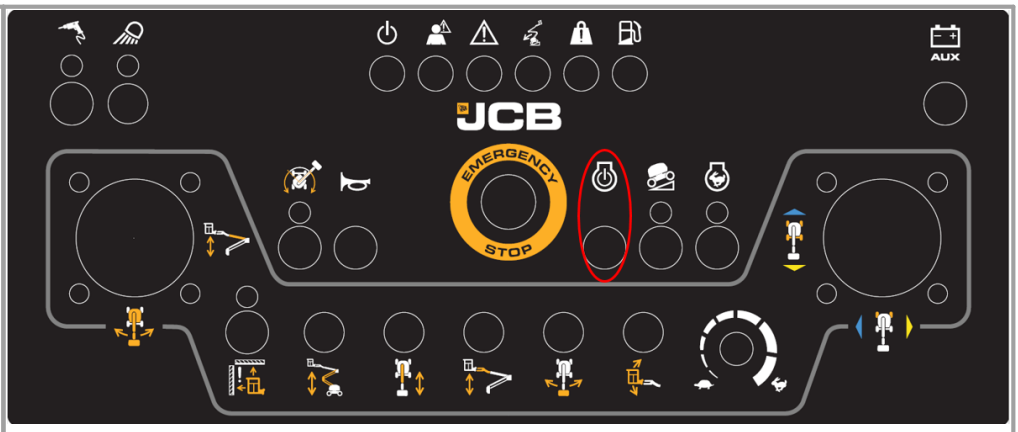



Signal:

Pin Number	Description	Connector number	Wire number(s)	Voltage unpressed	Voltage pressed
1	10V input	C212-1_PCP	1086	10V	NA
2	Signal output to ECU (10V when pressed, momentary)	C212-2_PCP	86		10V

© 2026 JCB INDIA LTD

Wires & Connectors :

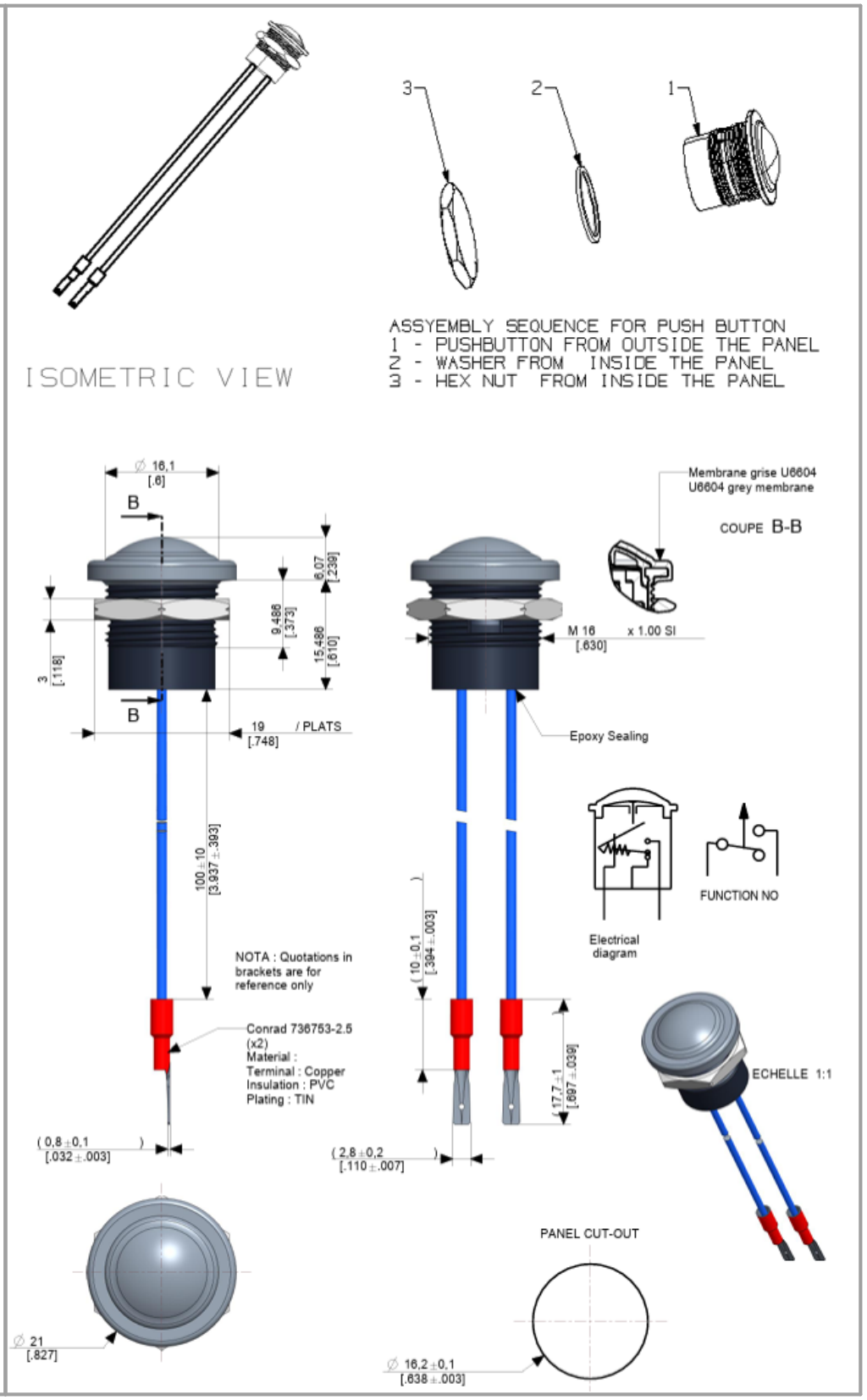

© 2026 JCB INDIA LTD

Internal Electrical Schematic:	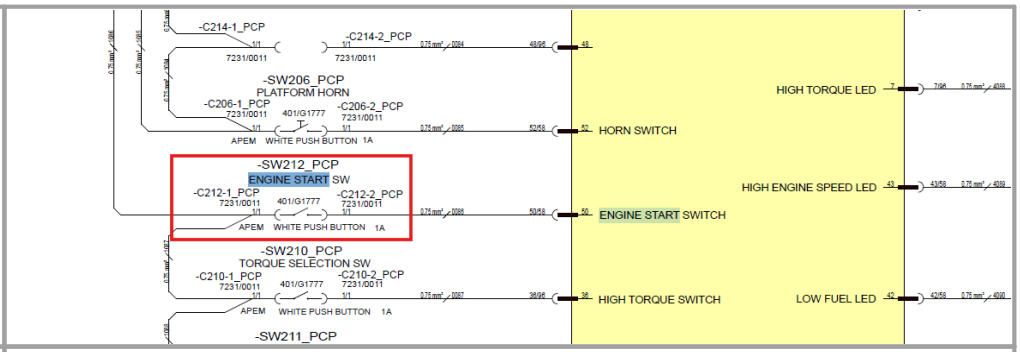
Testing:	Important: Use the multi-meter on the harness connector pins. DO NOT USE the meter on the ECU pins 1. Note-All the bush button fitted on machine are 10V ,normally open and closed when pressed Diagnostic feedback on push button are coming from ECU 1. Check supply at wiring harness terminal-1 with (respect to ground) on push button (when not pressed). It should read 10V. 2. Check the voltage at wiring harness terminal-2 on push button (When not pressed). It should read 2-3V 3. Check the continuity between terminal 1 & 2 after pressing the push button. It should buzz. 4. If there is continuity and we are getting 10V supply then it may be internal damage to push button. 5. If issue still there replace the push button.
Expected Values:	12V
Related Fault Codes:	

Fault Code	Fault Description
B1239-17 790	Engine start / stop platform button - Circuit short to high (10v)
B1240-16 791	Engine start / stop platform button - Circuit short to low
B1241-24 792	Engine start / stop platform button - signal stuck high

4.40.18 High Torque Selection Switch with LED



© 2026 JCB INDIA LTD

Component :	High Torque Selection Switch with LED
Function:	•The ignition key must be in the on position enabled. •The Push button is used to start the High Torque. •The Push button allow us to power the circuit when we press the button.
Location:	On Platform Control Box
Location Image:	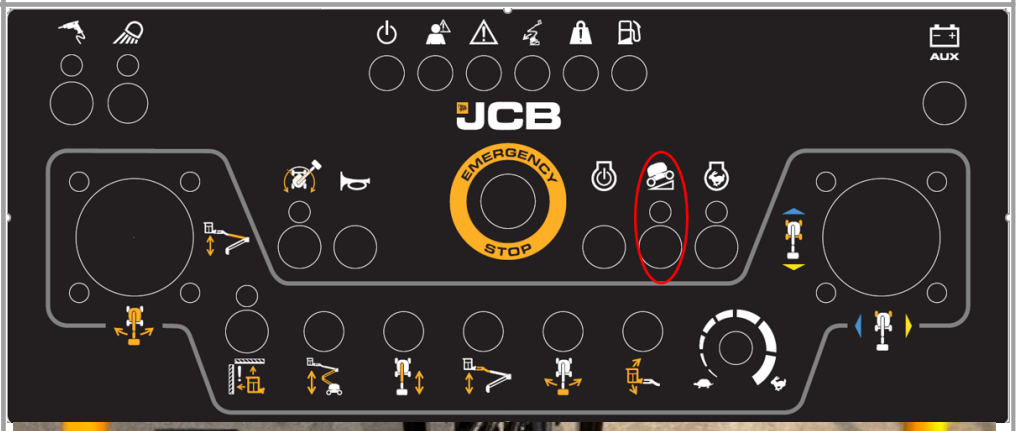 

Signal:

Pin Number	Description	Connector number	Wire number(s)	Voltage unpressed	Voltage pressed
1	10V input	C210-1_PCP	1087	10V	NA
2	Signal output to ECU (10V when pressed, momentary)	C210-2_PCP	87		10V

© 2026 JCB INDIA LTD

Wires & Connectors :

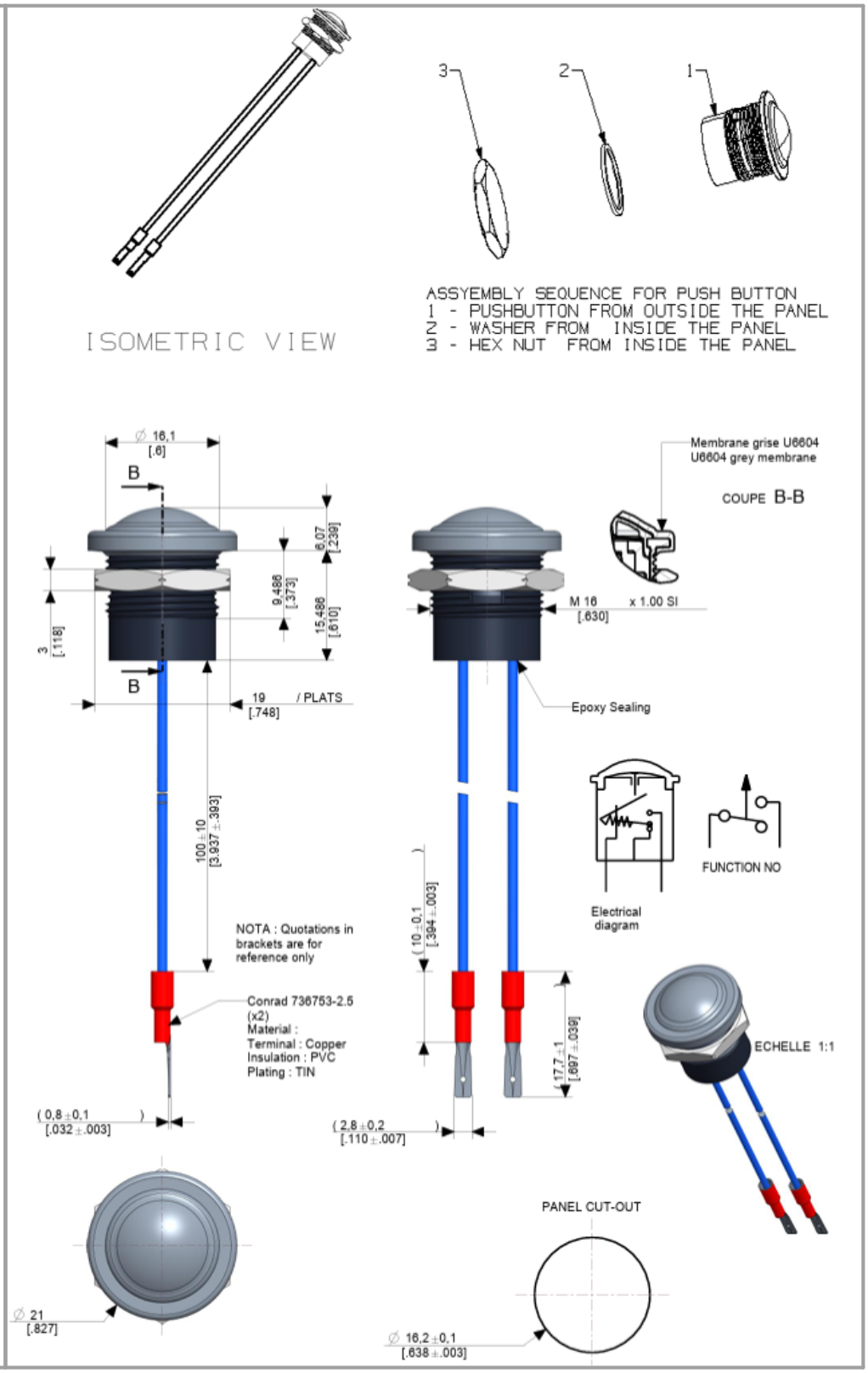

© 2026 JCB INDIA LTD

Internal Electrical Schematic:	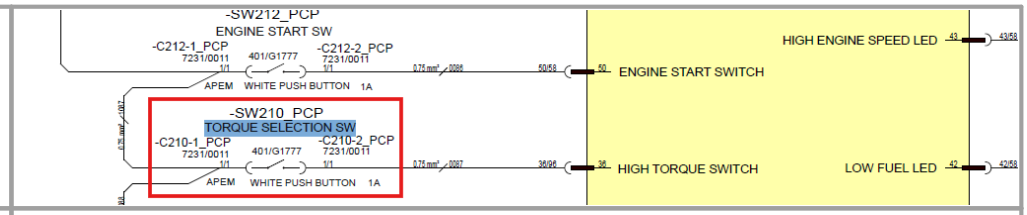
Testing:	Important: Use the multi-meter on the harness connector pins. DO NOT USE the meter on the ECU pins 1. Note-All the bush button fitted on machine are 10V ,normally open and closed when pressed Diagnostic feedback on push button are coming from ECU 1. Check supply at wiring harness terminal-1 with (respect to ground) on push button (when not pressed). It should read 10V. 2. Check the voltage at wiring harness terminal-2 on push button (When not pressed). It should read 2-3V 3. Check the continuity between terminal 1 & 2 after pressing the push button. It should buzz. 4. If there is continuity and we are getting 10V supply then it may be internal damage to push button. 5. If issue still there replace the push button.
Expected Values:	12V
Related Fault Codes:	

Fault Code	Fault Description
B1202-16 751	HIGH TORQUE LED SC to Low
B1203-13 752	HIGH TORQUE LED OC
B1212-17 762	HIGH TORQUE SPEED BUTTON SC to High
B1213-16 764	HIGH TORQUE SPEED BUTTON SC to Low
B1214-24 765	HIGH TORQUE SPEED BUTTON Stuck for >= 10 seconds

4.40.19 High Speed Switch with LED

High Speed Switch with LED

Components 134 > Platform & Control Panel 312 > High Speed Switch with LED

© 2026 JCB INDIA LTD

Component :	High Speed Switch with LED
Function:	•The Push button is used to start the High speed with LED. •The Push button allow us to power the circuit when we press the button.
Location:	On Platform Control Box
Location Image:	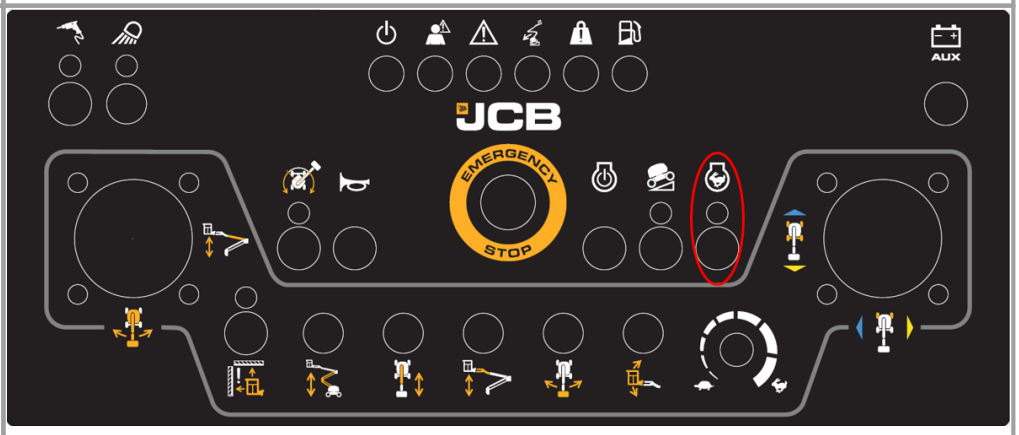 

Signal:

Pin Number	Description	Connector number	Wire number (s)	Voltage unpressed	Voltage pressed
1	10V input	C211-1_PCP	1089	10V	NA
2	Signal output to ECU (10V when pressed)	C211-2_PCP	89		10V

© 2026 JCB INDIA LTD

Wires & Connectors :

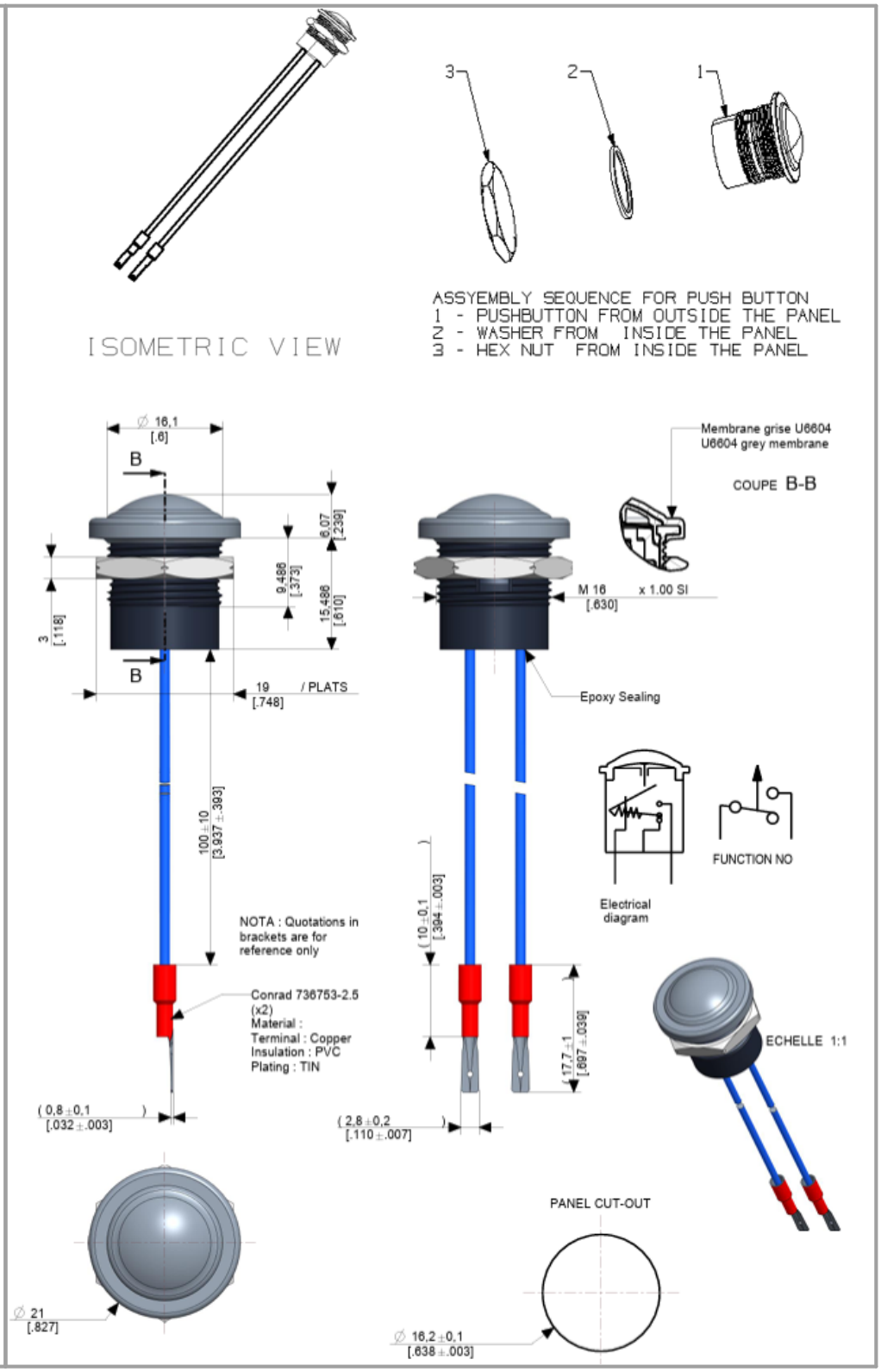

© 2026 JCB INDIA LTD

Internal Electrical Schematic:	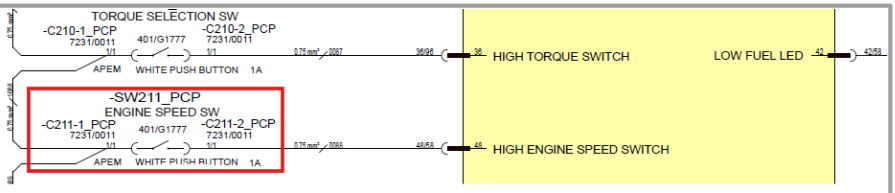
Testing:	Important: Use the multi-meter on the harness connector pins. DO NOT USE the meter on the ECU pins 1. Note-All the bush button fitted on machine are 10V ,normally open and closed when pressed Diagnostic feedback on push button are coming from ECU 1. Check supply at wiring harness terminal-1 with (respect to ground) on push button (when not pressed). It should read 10V. 2. Check the voltage at wiring harness terminal-2 on push button (When not pressed). It should read 2-3V 3. Check the continuity between terminal 1 & 2 after pressing the push button. It should buzz. 4. If there is continuity and we are getting 10V supply then it may be internal damage to push button. 5. If issue still there replace the push button.
Expected Values:	12V

Related Fault Codes:

Fault Code	Fault Description
B1204 -16 753	HIGH ENGINE SPEED LED SC to Low
B1205 -13 754	HIGH ENGINE SPEED LED OC
B1209 -17 759	HIGH ENGINE SPEED BUTTON SC to High
B1210 -16 760	HIGH ENGINE SPEED BUTTON SC to Low
B1211 -24 761	HIGH ENGINE SPEED BUTTON Stuck for >= 10 seconds

4.40.20 Hydraulic Generator Switch with LED

Hydraulic Generator Switch with LED

Components 134 > Platform & Control Panel 312 > Hydraulic Generator Switch with LED

© 2026 JCB INDIA LTD

Component :	Hydraulic Generator Switch with LED
Function:	•The Push button allow us to power the circuit when we press the button. •The Push button is used to start the Hydraulic generator switch with LED.
Location:	On Platform Control Box
Location Image:	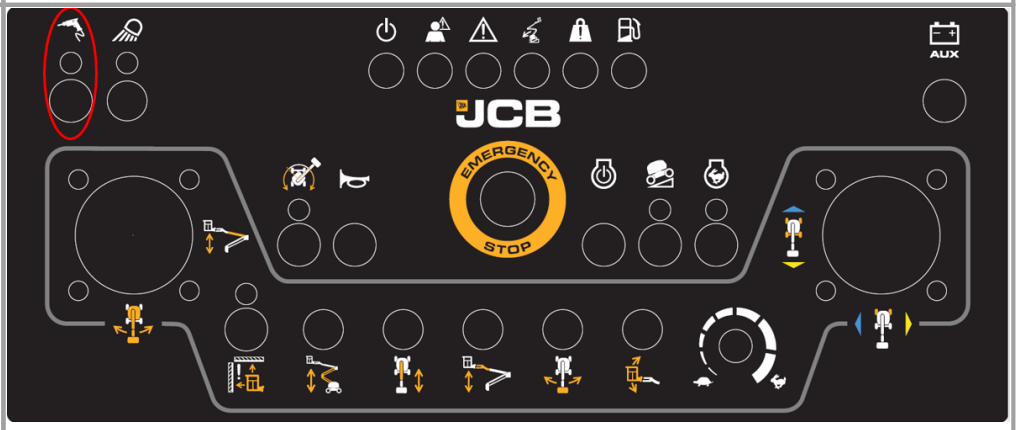 

Signal:

Pin Number	Description	Wire Number
1	10V input	1082
2	Signal output to ECU (10V when pressed)	82

© 2026 JCB INDIA LTD

Wires & Connectors :

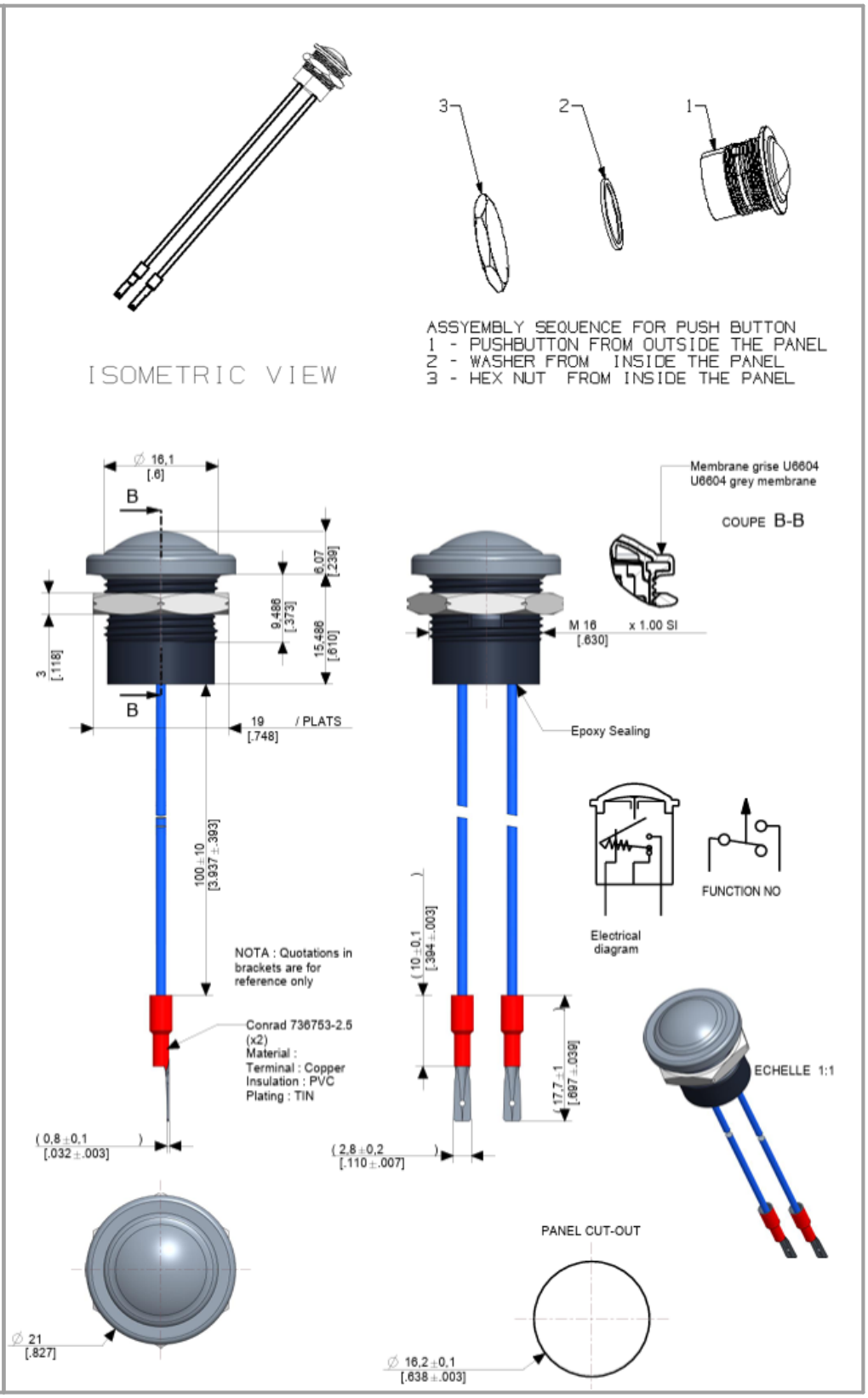

© 2026 JCB INDIA LTD

Internal Electrical Schematic:	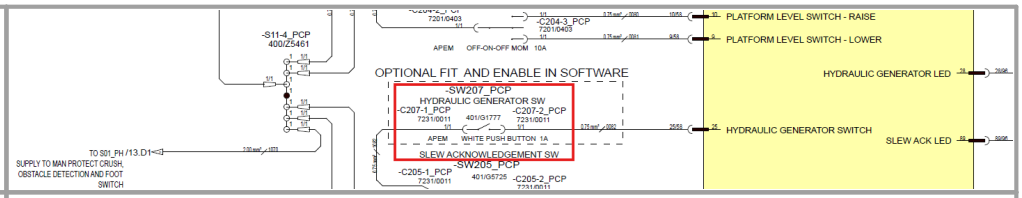
Testing:	Important: Use the multi-meter on the harness connector pins. DO NOT USE the meter on the ECU pins 1. Note-All the bush button fitted on machine are 10V ,normally open and closed when pressed Diagnostic feedback on push button are coming from ECU 1. Check supply at wiring harness terminal-1 with (respect to ground) on push button (when not pressed). It should read 10V. 2. Check the voltage at wiring harness terminal-2 on push button (When not pressed). It should read 2-3V 3. Check the continuity between terminal 1 & 2 after pressing the push button. It should buzz. 4. If there is continuity and we are getting 10V supply then it may be internal damage to push button. 5. If issue still there replace the push button.
Expected Values:	12V
Related Fault Codes:	

Fault Code	Fault Description
B1186-16 734	HYDRAULIC GENERATOR LED SC to Low
B1187-13 735	HYDRAULIC GENERATOR LED OC
B1215-17 766	HYDRAULIC GENERATOR BUTTON SC to High
B1216-16 767	HYDRAULIC GENERATOR BUTTON SC to Low
B1217-24 768	HYDRAULIC GENERATOR BUTTON Stuck for >= 10 seconds

4.40.21 Worklight Switch with LED

Work light Switch with LED

Components 134 > Platform & Control Panel 312 > Worklight Switch with LED

© 2026 JCB INDIA LTD

Component :	Work light Switch with LED
Function:	•This switch is optional fit and may not be fitted to all machines. •The Switch will turn on LED work lights at the platform. •The Lights will only work when the engine is running to avoid a battery drain condition and being stuck up in the air. •The LED will be active when the work lights are turned on.
Location:	On Platform Control Box
Location Image:	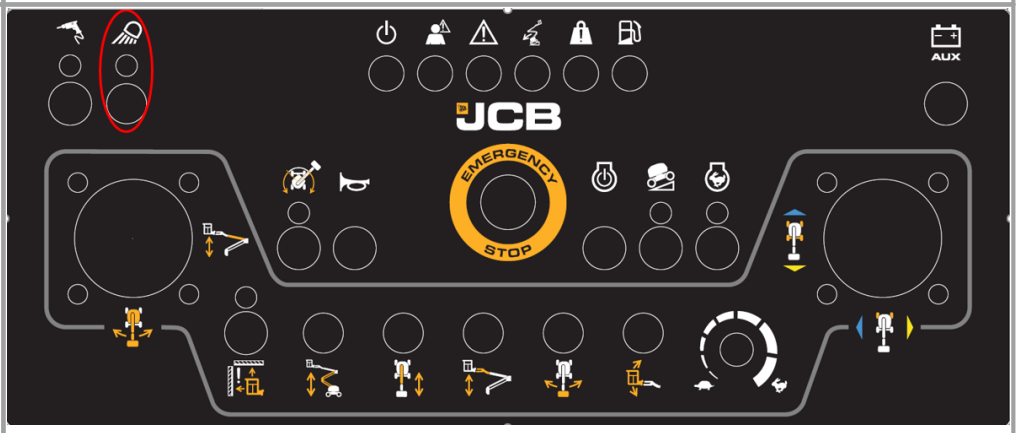 

Signal:

Switch wiring					
Pin Number	**Description**	**Connector number**	**Wire number(s)**	**Voltage unpressed**	**Voltage pressed**
1	12V input	C216-1_PCP	1035	12V	NA
2	Signal output	C216-2_PCP	8035	0V	12V

© 2026 JCB INDIA LTD

	LED wiring			
	Pin Number	**Description**	**Connector number**	**Wire number(s)**
	1	12V input from switch	C225-1_PCP	8002
	2	GND	C225-2_PCP	6035
Wires & Connectors :	 ISOMETRIC VIEW 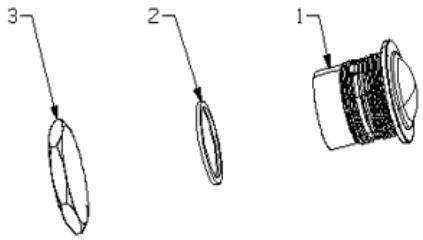 ASSYEMBLY SEQUENCE FOR PUSH BUTTON 1 - PUSHBUTTON FROM OUTSIDE THE PANEL 2 - WASHER FROM INSIDE THE PANEL 3 - HEX NUT FROM INSIDE THE PANEL			

© 2026 JCB INDIA LTD

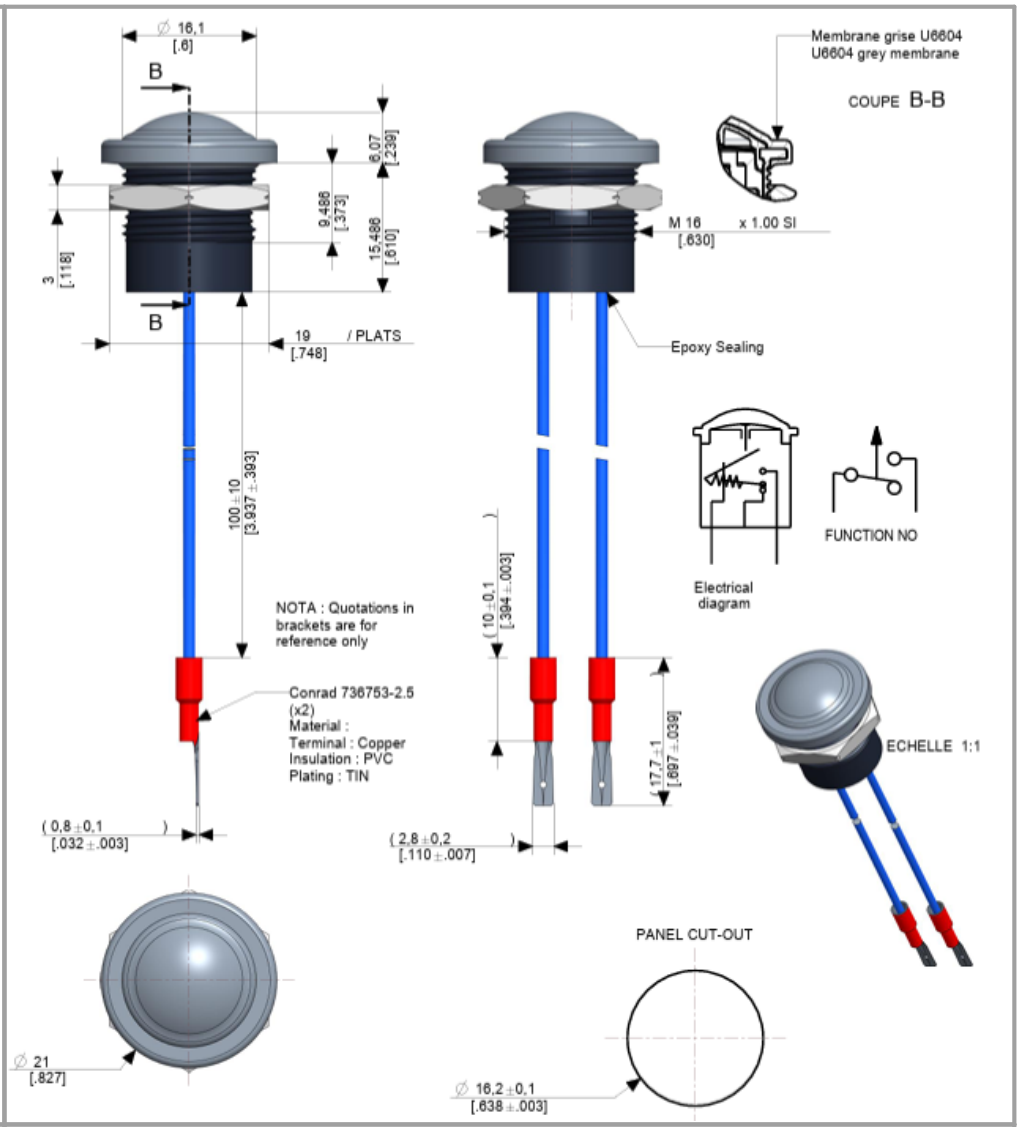

Internal Electrical Schematic:

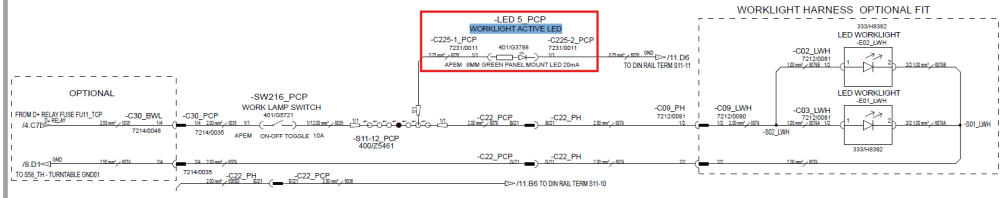

Testing:

Important: Use the multi-meter on the harness connector pins. DO NOT USE the meter on the ECU pins

1. Note-All the bush button fitted on machine are 10V ,normally open and closed when pressed

Diagnostic feedback on push button are coming from ECU

1. Check supply at wiring harness terminal-1 with (respect to ground) on push button (when not pressed). It should read 10V.

© 2026 JCB INDIA LTD

	2. Check the voltage at wiring harness terminal-2 on push button (When not pressed). It should read 2-3V 3. Check the continuity between terminal 1 & 2 after pressing the push button. It should buzz. 4. If there is continuity and we are getting 10V supply then it may be internal damage to push button. 5. If issue still there replace the push button.
Expected Values:	12V
Related Fault Codes:	N/A

4.40.22 Electric Pump Switch (AUX)

Electric Pump Switch (AUX)

Components 134 > Platform & Control Panel 312 > Electric Pump Switch (AUX)

Component:	Electric Pump Switch (AUX)
Function:	•To use the electric pump the engine can not be running •The foot pedal and this button along with function is required to operate the machine.
Location:	On Platform Control Box
Location Image:	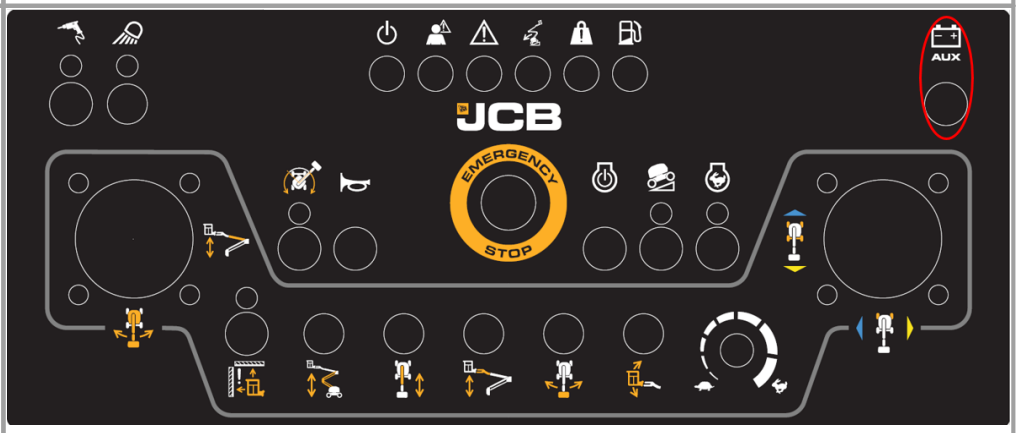

© 2026 JCB INDIA LTD



Signal:

Pin Number	Description	Connector number	Wire number(s)	Voltage unpressed	Voltage pressed
1	10V input	C211-1_PCP	1088	10V	NA
2	Signal output	C211-2_PCP	90		10V

© 2026 JCB INDIA LTD

Wires & Connectors :

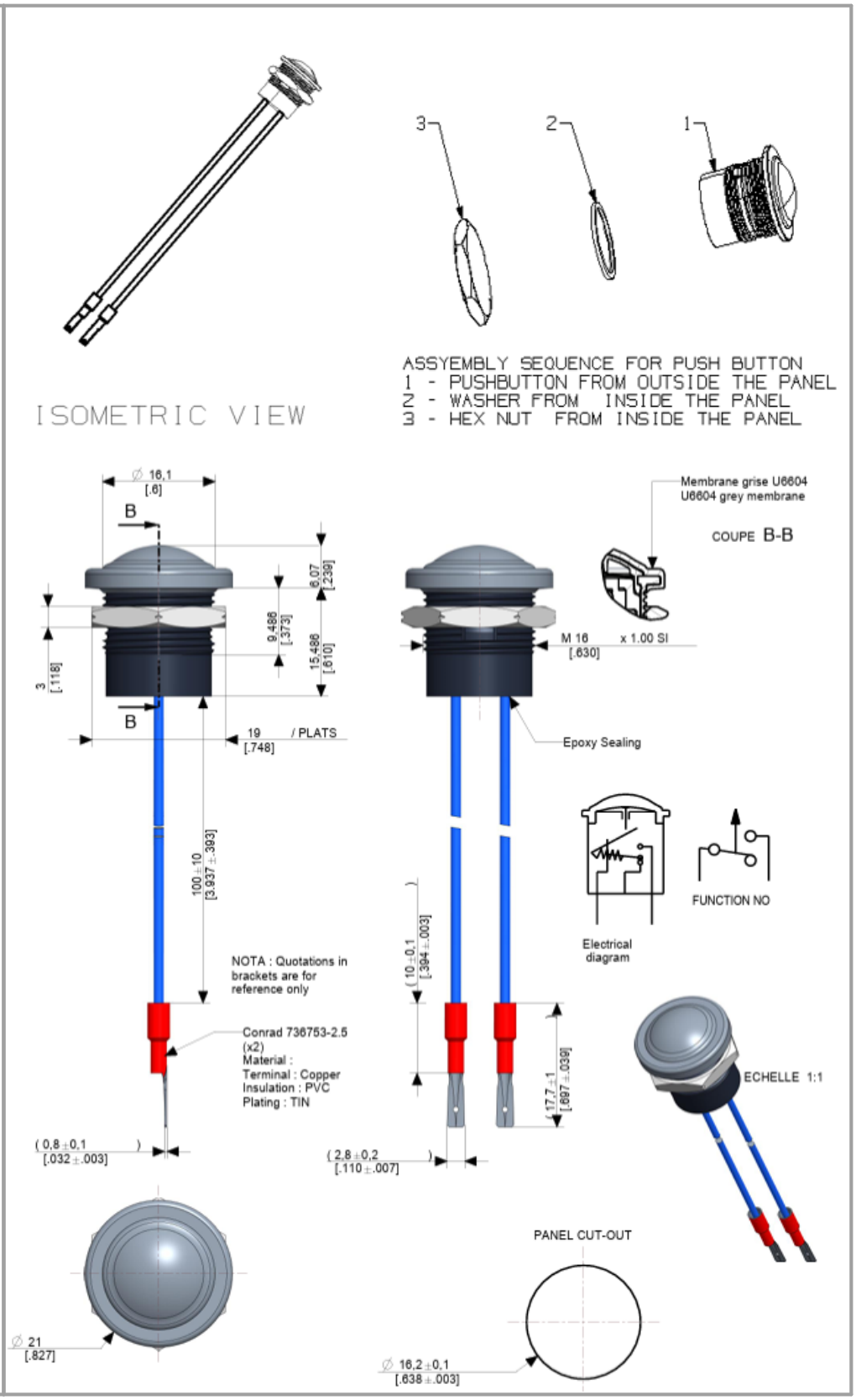

© 2026 JCB INDIA LTD

Internal Electrical Schematic:	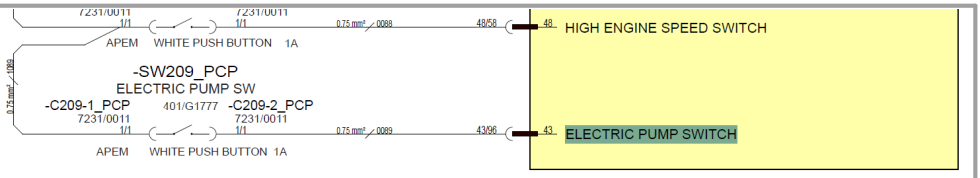
Testing:	1. Check the continuity between terminal 1 & 2 after pressing the push button. It should buzz. 2. Check Wire no. 1088 and 0090.
Expected Values:	12V
Related Fault Codes:	**Fault Code** / **Fault Description** B1055-17 602 — ELECTRIC PUMP Switch pressed SC to High B1056-16 603 — ELECTRIC PUMP Switch pressed SC to Low

4.40.23 Power LED

Power LED

Components 134 > Platform & Control Panel 312 > Power LED

Component:	Power LED
Function:	This LED is to show when the ignition key is in the 'ON' position
Location:	On Platform Control Box

© 2026 JCB INDIA LTD

Location Image:

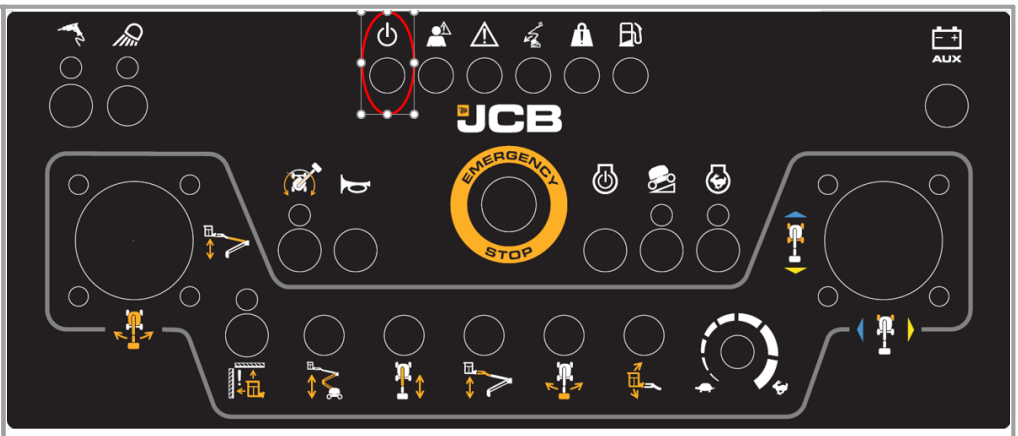



Signal:

Pin Number	Description	Colour of pin	Connector number	Wire number
1	Input	Gold	C40-1_PCP	1025
2	GND	Silver	C40-2_PCP	6025

Wires & Connectors :

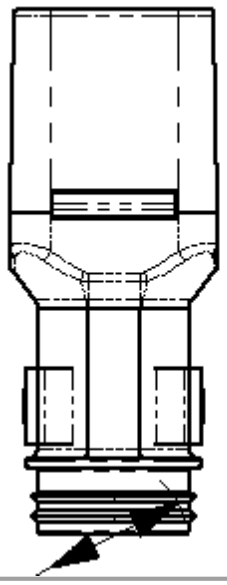

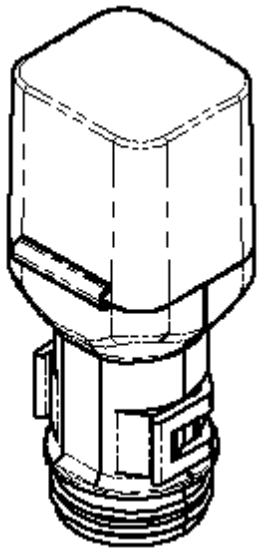

© 2026 JCB INDIA LTD

Internal Electrical Schematic:	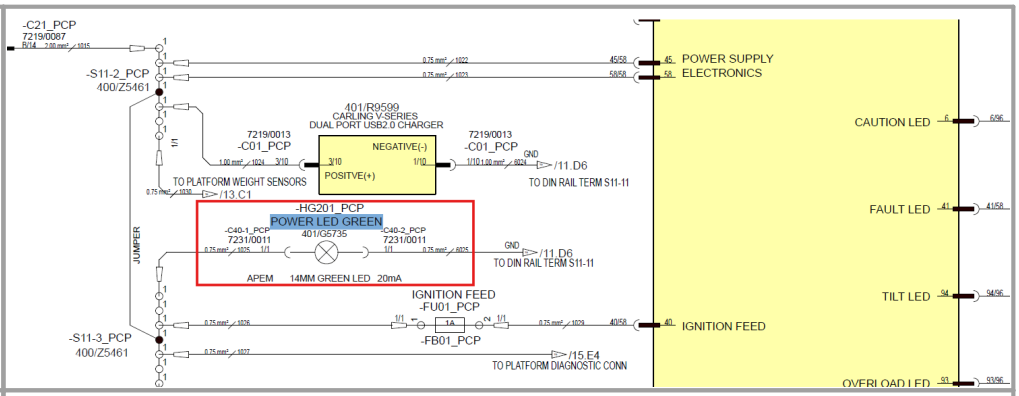
Testing:	Important: Use the multi-meter on the harness connector pins. DO NOT USE the meter on the ECU pins 1. All LED fitted on machines are 12V 2. Gold terminal is positive & silver terminal is negative 3. Check LED should not be broken 4. IF LED light up it could be the wiring issues 5. Check the continuity on gold (positive) terminal & silver (negative) terminal of LED 6. If continuity is there on both terminal then 7. Check 12volt supply by using a multi meter 8. Connect the live terminal to the positive multi meter probe and the negative probe directly to the a main earth point on the machine or the negative terminal of the battery. 9. If this shows voltage below 12 volts then follow the schematic and investigate where the break in the wire/ circuit is. 10. If 12 volt feed is coming next check the earth by placing the positive probe of the multi meter on the live feed of the led and the negative probe onto the earth feed to the led. 11. if this again reads 12 volts this indicate LED failure , replace with new LED.
Expected Values:	12V
Related Fault Codes:	N/A

© 2026 JCB INDIA LTD

4.40.24 User Caution LED

User Caution LED

Components 134 > Platform & Control Panel 312 > User Caution LED

Component:	User Caution LED
Function:	•The caution LED shall be set as base. •This LED is to show the Error on machine.
Location:	On Platform Control Box
Location Image:	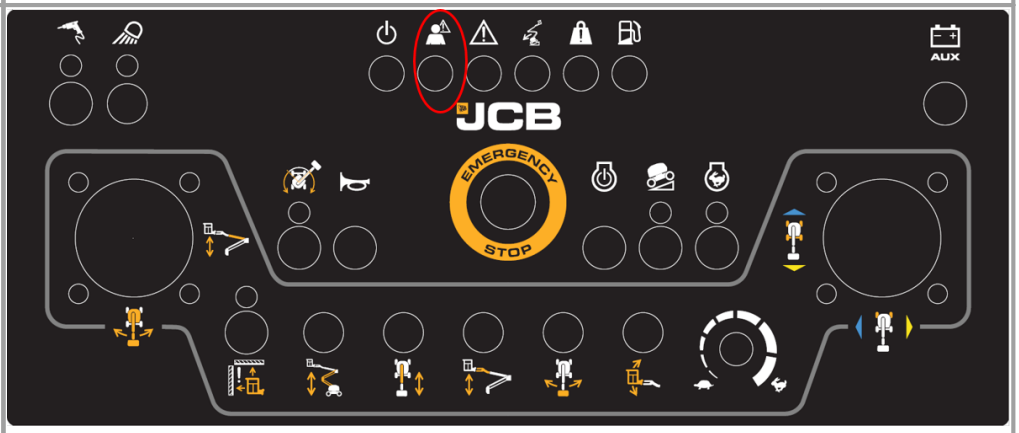 

Signal:

Pin Number	Description	Colour of pin	Connector number	Wire number
1	Input	Gold	C38-1_PCP	4077

© 2026 JCB INDIA LTD

	2	GND	Silver	C38-2_PCP	6077

Wires & Connectors :

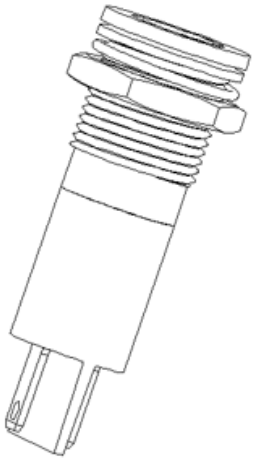

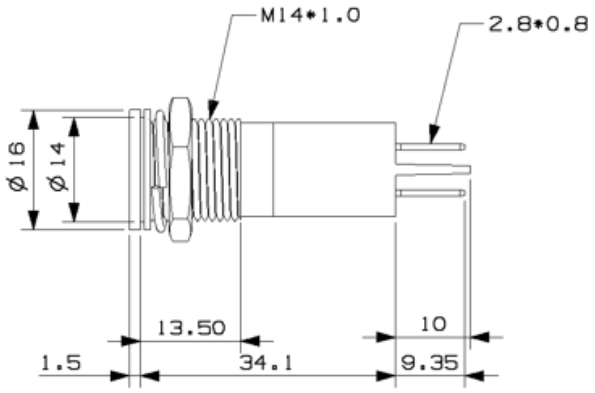

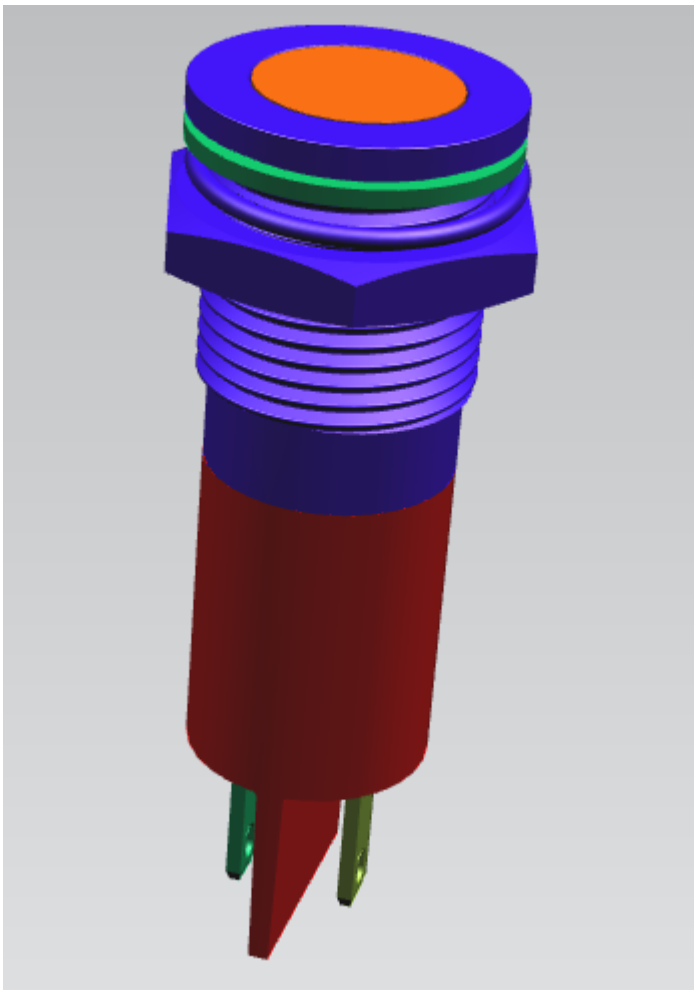

© 2026 JCB INDIA LTD

Internal Electrical Schematic:	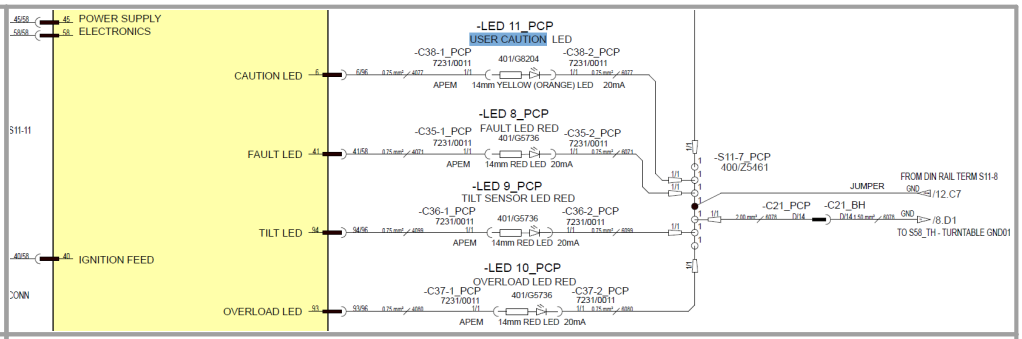
Testing:	Important: Use the multi-meter on the harness connector pins. DO NOT USE the meter on the ECU pins 1. All LED fitted on machines are 12V 2. Gold terminal is positive & silver terminal is negative 3. Check LED should not be broken 4. IF LED light up it could be the wiring issues 5. Check the continuity on gold (positive) terminal & silver (negative) terminal of LED 6. If continuity is there on both terminal then 7. Check 12volt supply by using a multi meter 8. Connect the live terminal to the positive multi meter probe and the negative probe directly to the a main earth point on the machine or the negative terminal of the battery. 9. If this shows voltage below 12 volts then follow the schematic and investigate where the break in the wire/ circuit is. 10.If 12 volt feed is coming next check the earth by placing the positive probe of the multi meter on the live feed of the led and the negative probe onto the earth feed to the led. 11.if this again reads 12 volts this indicate LED failure , replace with new LED
Expected Values:	12V
Related Fault Codes:	<table><tr><th>Fault Code</th><th>Fault Description</th></tr><tr><td>B1188-16 737</td><td>CAUTION LED Short Circuit to Low</td></tr><tr><td>B1189-13 738</td><td>CAUTION LED Open Circuit</td></tr></table>

© 2026 JCB INDIA LTD

4.40.25 Fault LED

Fault LED

Components 134 > Platform & Control Panel 312 > Fault LED

Component:	Fault LED
Function:	•The Fault LED shall be in the platform control station and also displayed on the display. •Due to the display being at the base and not as much information being shown in the platform to the operator the fault LED shall indicate there is an issue with the machine and the operator should return to the base and take a look at the screen to understand the actual reason of the fault.
Location:	On Platform Control Box
Location Image:	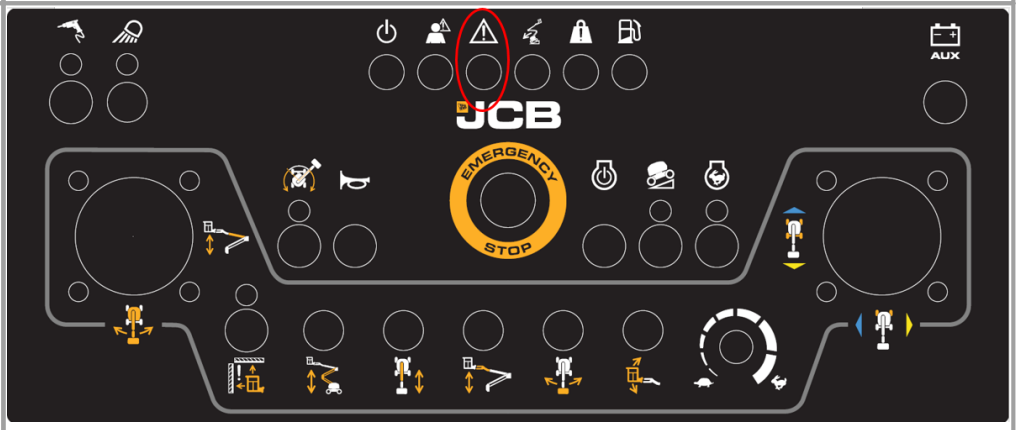 

© 2026 JCB INDIA LTD

Signal:

Pin Number	Description	Colour of pin	Connector number	Wire number
1	Input	Gold	C35-1_PCP	4071
2	GND	Silver	C35-2_PCP	6071

Wires & Connectors:

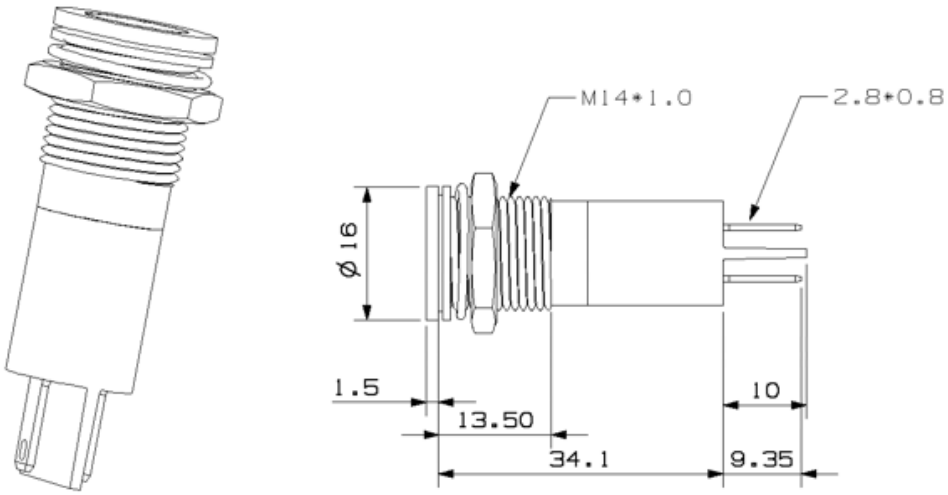

Internal Electrical Schematic:

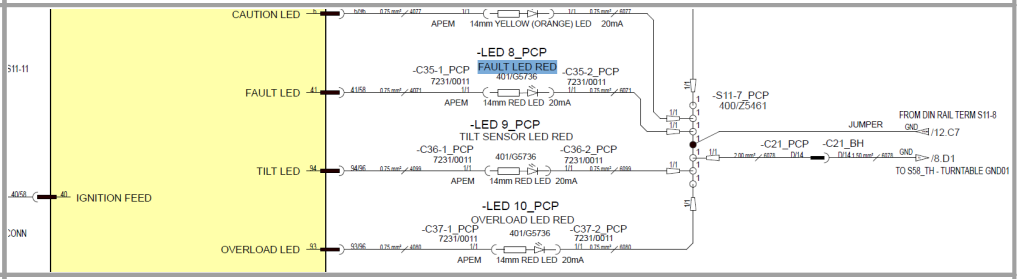

Testing:

Important: Use the multi-meter on the harness connector pins. DO NOT USE the meter on the ECU pins

1. All LED fitted on machines are 12V
2. Gold terminal is positive & silver terminal is negative
3. Check LED should not be broken
4. IF LED light up it could be the wiring issues
5. Check the continuity on gold (positive) terminal & silver (negative) terminal of LED
6. If continuity is there on both terminal then
7. Check 12volt supply by using a multi meter
8. Connect the live terminal to the positive multi meter probe and the negative probe directly to the a main earth point on the machine or the negative terminal of the battery.
9. If this shows voltage below 12 volts then follow the schematic and investigate where the break in the wire/ circuit is.

© 2026 JCB INDIA LTD

	10. If 12 volt feed is coming next check the earth by placing the positive probe of the multi meter on the live feed of the led and the negative probe onto the earth feed to the led. 11. if this again reads 12 volts this indicate LED failure , replace with new LED.
Expected Values:	12V
Related Fault Codes:	**Fault Code** / **Fault Description** B1190-16 739 — FAULT LED Short Circuit to Low B1191-13 740 — FAULT LED Open Circuit

4.40.26 Tilt Sensor LED

Tilt Sensor LED

Components 134 > Platform & Control Panel 312 > Tilt Sensor LED

Component:	Tilt Sensor LED
Function:	•If the tilt sensor indicates the machine is on a slope greater than the maximum rating for the machine (5 degrees) and the machine is outside its stowed position (i.e. any of the articulated boom, main boom, or tele-boom is raised/extended, beyond their respective limit switches). •The LED show on Platform control panel.
Location:	On Platform Control Box

© 2026 JCB INDIA LTD

Location Image:

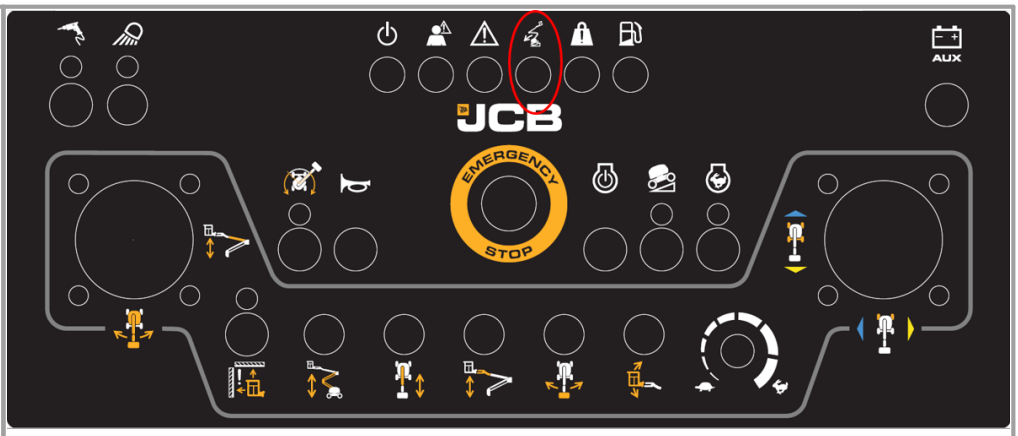



Signal:

Pin Number	Description	Colour of pin	Connector number	Wire number
1	Input	Gold	C36-1_PCP	4099
2	GND	Silver	C36-2_PCP	6099

Wires & Connectors :

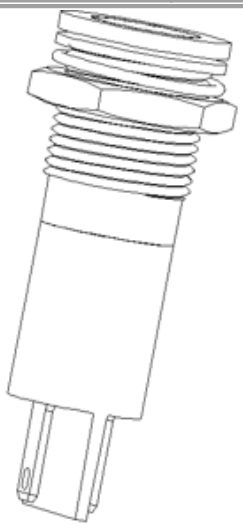

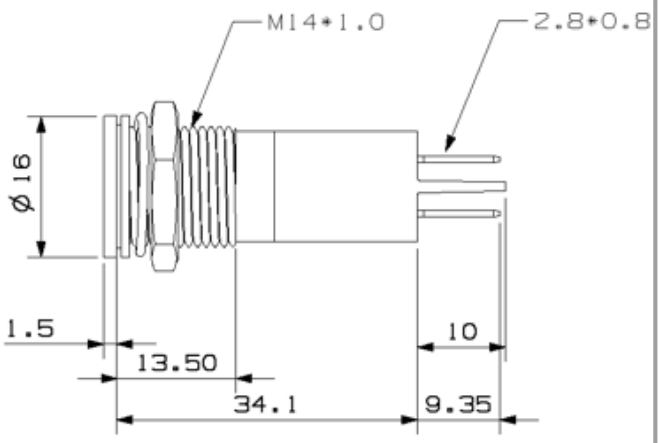

© 2026 JCB INDIA LTD

Internal Electrical Schematic:	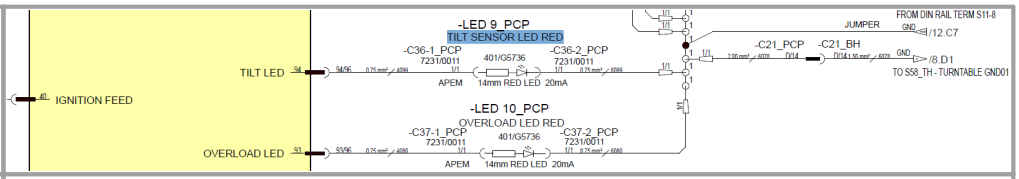
Testing:	Important: Use the multi-meter on the harness connector pins. DO NOT USE the meter on the ECU pins 1. All LED fitted on machines are 12V 2. Gold terminal is positive & silver terminal is negative 3. Check LED should not be broken 4. IF LED light up it could be the wiring issues 5. Check the continuity on gold (positive) terminal & silver (negative) terminal of LED 6. If continuity is there on both terminal then 7. Check 12volt supply by using a multi meter 8. Connect the live terminal to the positive multi meter probe and the negative probe directly to the a main earth point on the machine or the negative terminal of the battery. 9. If this shows voltage below 12 volts then follow the schematic and investigate where the break in the wire/ circuit is. 10.If 12 volt feed is coming next check the earth by placing the positive probe of the multi meter on the live feed of the led and the negative probe onto the earth feed to the led. 11.if this again reads 12 volts this indicate LED failure , replace with new LED.
Expected Values:	12V
Related Fault Codes:	**Fault Code** / **Fault Description** B1192-16 741 — TILT LED Short Circuit to Low B1193-13 743 — TILT LED Open Circuit

4.40.27 Overload LED

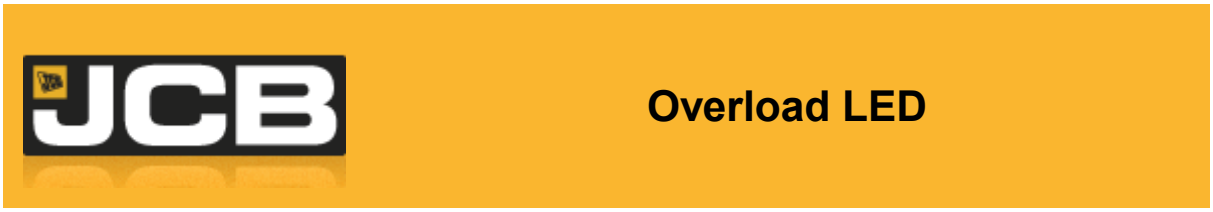

© 2026 JCB INDIA LTD

Components 134 > Platform & Control Panel 312 > Overload LED

Component:	Overload LED
Function:	This LED to is warn the operator when the platform has to much load in the platform.
Location:	On Platform Control Box
Location Image:	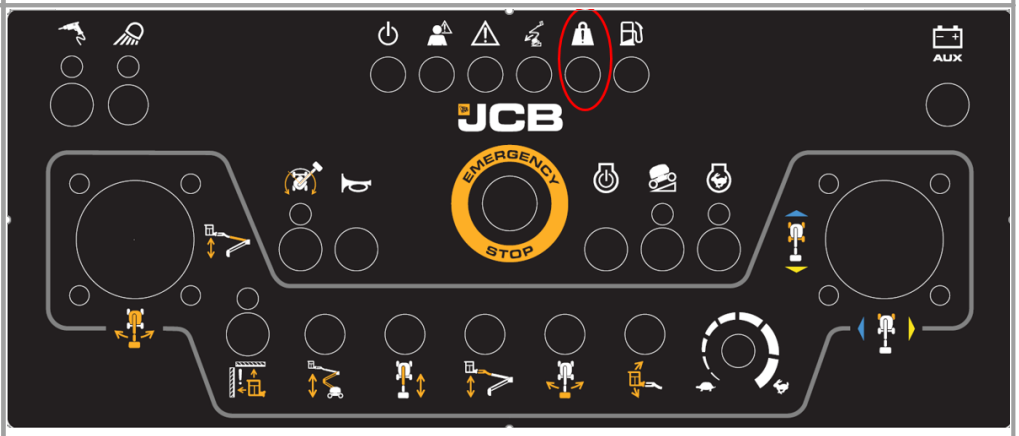 

Signal:

Pin Number	Description	Colour of pin	Connector number	Wire number
1	Input	Gold	C37-1_PCP	4080
2	GND	Silver	C37-2_PCP	6080

© 2026 JCB INDIA LTD

Wires & Connectors :	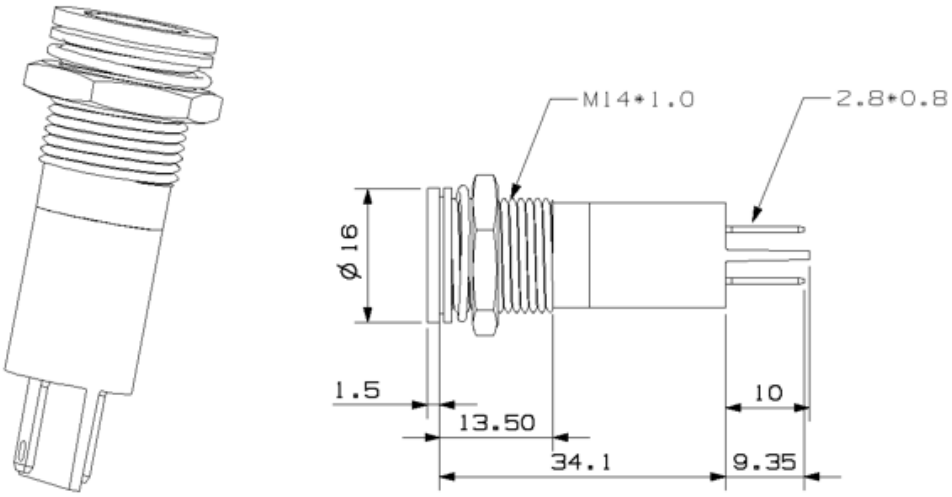
Internal Electrical Schematic:	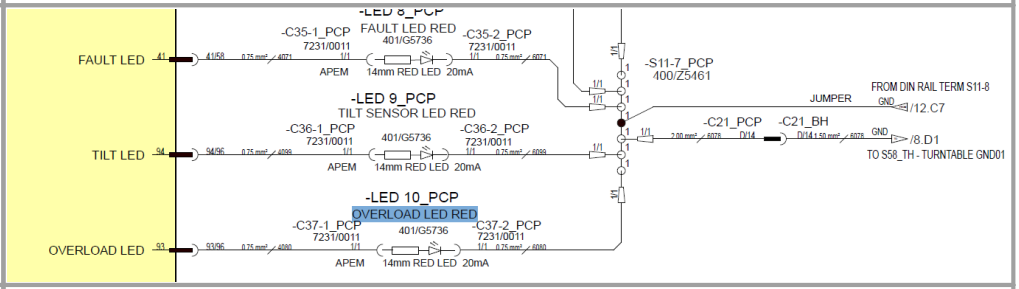
Testing:	Important: Use the multi-meter on the harness connector pins. DO NOT USE the meter on the ECU pins 1. All LED fitted on machines are 12V 2. Gold terminal is positive & silver terminal is negative 3. Check LED should not be broken 4. IF LED light up it could be the wiring issues 5. Check the continuity on gold (positive) terminal & silver (negative) terminal of LED 6. If continuity is there on both terminal then 7. Check 12volt supply by using a multi meter 8. Connect the live terminal to the positive multi meter probe and the negative probe directly to the a main earth point on the machine or the negative terminal of the battery. 9. If this shows voltage below 12 volts then follow the schematic and investigate where the break in the wire/ circuit is. 10. If 12 volt feed is coming next check the earth by placing the positive probe of the multi meter on the live feed of the led and the negative probe onto the earth feed to the led. 11. if this again reads 12 volts this indicate LED failure , replace with new LED.

© 2026 JCB INDIA LTD

Expected Values:	12V
Related Fault Codes:	<table><tr><th>Fault Code</th><th>Fault Description</th></tr><tr><td>B1194-16 744</td><td>Overload LED Short Circuit to Low</td></tr><tr><td>B1195-13 745</td><td>Overload LED Open Circuit</td></tr></table>

4.40.28 Low Fuel Level LED

Low Fuel Level LED

Components 134 > Platform & Control Panel 312 > Low Fuel Level LED

Component:	Low Fuel Level LED
Function:	The low fuel LED is to warn the operator when the fuel tanks reaches to a low level to allow the operator time to go down and refill.
Location:	On Platform Control Box

© 2026 JCB INDIA LTD

Location Image:	 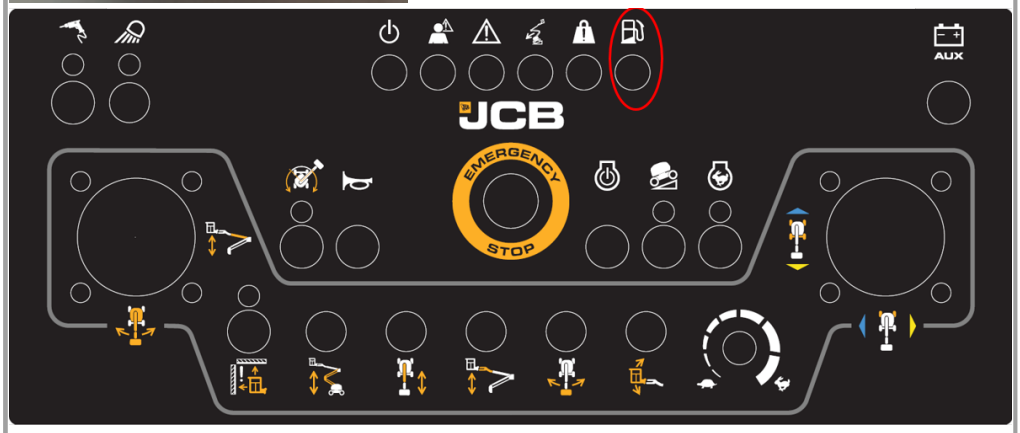

© 2026 JCB INDIA LTD



Signal:

Pin Number	Description	Colour of pin	Connector number	Wire number
1	Input	Gold	C39-1_PCP	4090
2	GND	Silver	C39-2_PCP	6090

Wires & Connectors:

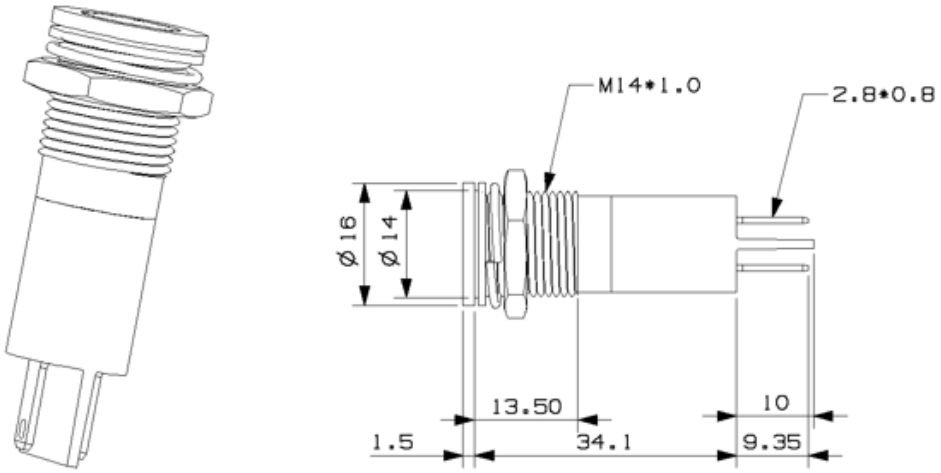

Internal Electrical Schematic:

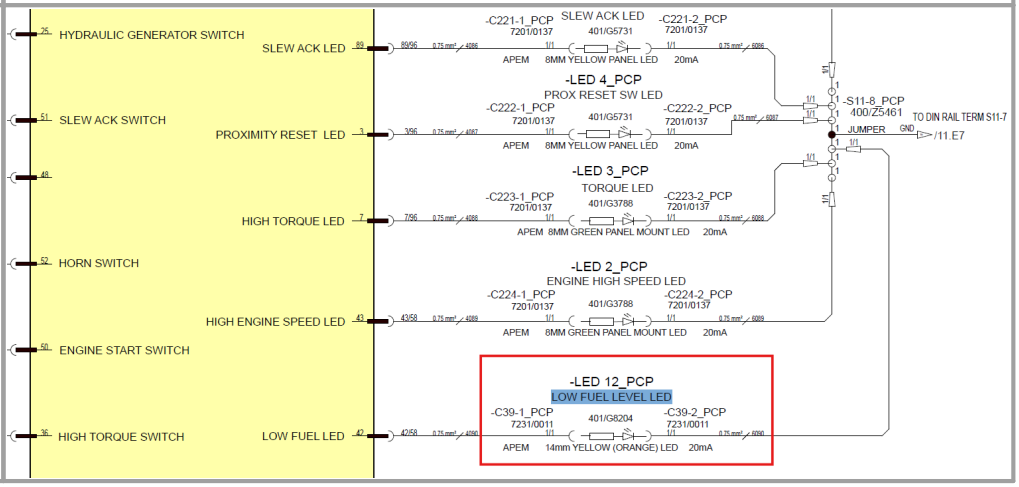

© 2026 JCB INDIA LTD

Testing:	Important: Use the multi-meter on the harness connector pins. DO NOT use the meter on the ECU pins. (SN0011) 1. All LED fitted on machines are 12V 2. Gold terminal is positive & silver terminal is negative 3. Check LED should not be broken 4. IF LED light up it could be the wiring issues 5. Check the continuity on gold (positive) terminal & silver (negative) terminal of LED 6. If continuity is there on both terminal then 7. Check 12volt supply by using a multi meter 8. Connect the live terminal to the positive multi meter probe and the negative probe directly to the a main earth point on the machine or the negative terminal of the battery. 9. If this shows voltage below 12 volts then follow the schematic and investigate where the break in the wire/ circuit is. 10. If 12 volt feed is coming next check the earth by placing the positive probe of the multi meter on the live feed of the led and the negative probe onto the earth feed to the led. 11. if this again reads 12 volts this indicate LED failure , replace with new LED.
Expected Values:	12V
Related Fault Codes:	**Fault Code** / **Fault Description** B1196-16 746 — LOW FUEL LED Short Circuit to Low B1197-13 747 — LOW FUEL LED Open Circuit

4.40.29 PCP Interface Connectors



Components 134 > Platform & Control Panel 312 > PCP Interface Connectors

© 2026 JCB INDIA LTD

Component :	PCP Interface Connectors
Function:	•There is 2 connectors that interface with the machine. •1 feeds the platform harness around the platform C21_PCP •2. feed and return to the base of the machine C22_PCP
Location:	On Platform Control Box bottom side
Location Image:	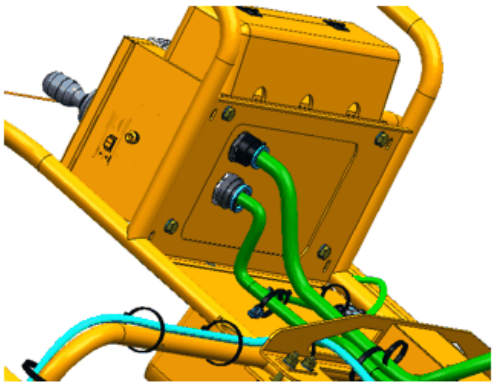 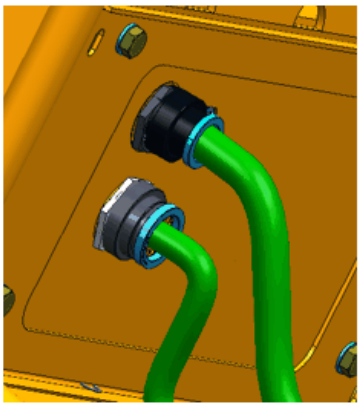

Signal:

C21_PCP_BOOM HARNESS CONN. :

Pin Number	Description	Wire Number
A	IGN	1014
B	IGN	1015
C	-	-
D	GND	6078
E	GND	6040
F	GND	6028
G	-	-
H	-	-
J	-	-
K	-	-
L	-	-
M	CAN HIGH	CANH15
N	CAN LOW	CANL15

© 2026 JCB INDIA LTD

P	CAN SHIELD	CANS15	

C22_PCP_PLATFORM INTERCONNECT:

Pin Number	Description	Wire Nun
A	IGN	4091
B	IGN	8079
C	-	4092
D	GND	1070
E	GND	6036
F	GND	4093
G	-	6079
H	-	4094
J	-	4070
K	-	4096
L	-	4097
M	CAN HIGH	4098
N	CAN LOW	4081
P	CAN SHIELD	4082
R	PLATFORM ROTATE RIGHT SOL HS	4083
S	PLATFORM ROTATE LEFT SOL HS	4084
T	IGN	1030
U	GND	6072
V	GND	6070
W	SIGNAL	4101
X	SIGNAL	4102

Wires & Connectors:

C21_PCP Boom harness connection
C22_PCP Platform interconnect from base

© 2026 JCB INDIA LTD

	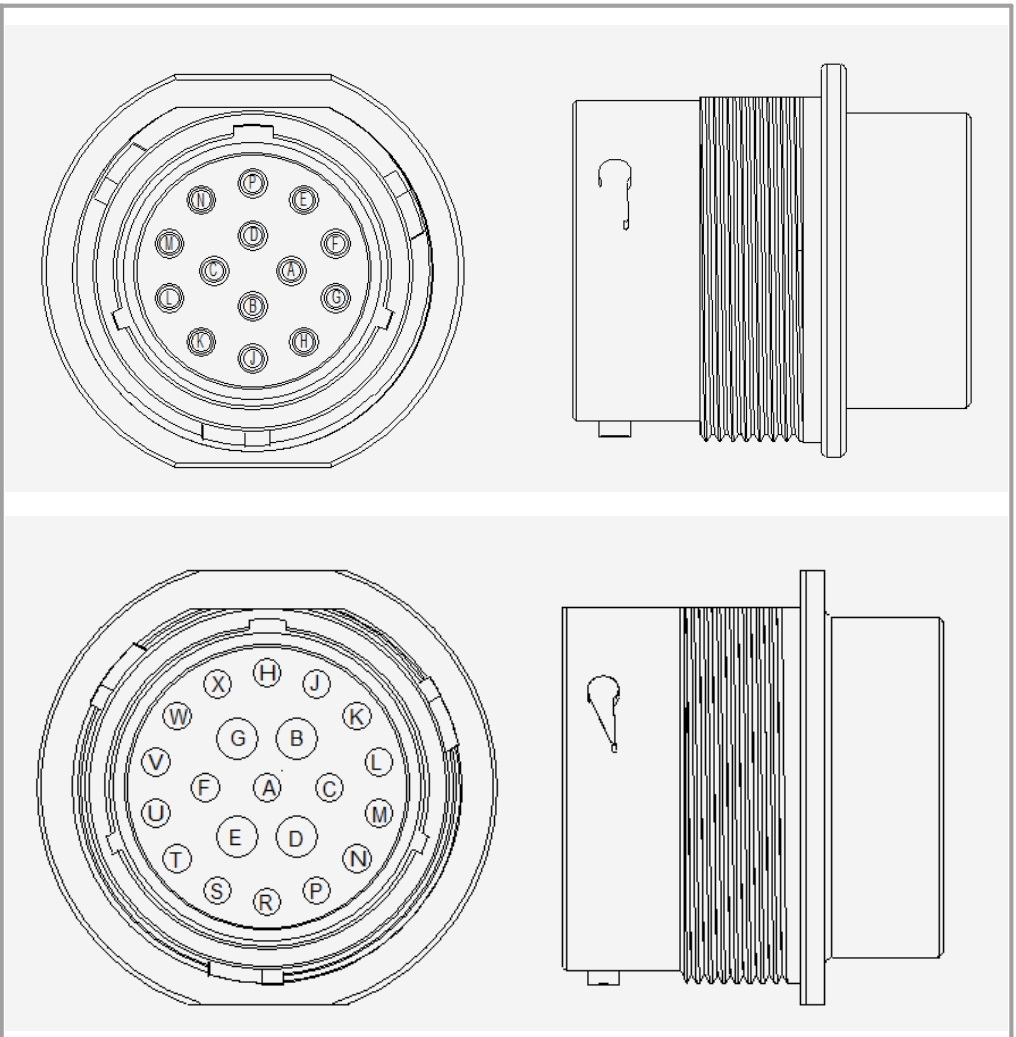
Internal Electrical Schematic:	Refer Schematic: 401/T6225
Testing:	Important: Use the multi-meter on the harness connector pins. DO NOT USE the meter on the ECU pins 1. Check all the wire and connecter are fitted correctly. No wire should be backed out 2. Check male & female connector are mating properly.
Expected Values:	N/A
Related Fault Codes:	N/A

© 2026 JCB INDIA LTD

4.40.30 Jumper Bars

Jumper Bars

Components 134 > Platform & Control Panel 312 > Jumper Bars

Component:	Jumper Bars
Function:	•The jumper bars are used for connecting the din rail terminals together. This allows for the same signals to be connected together. •Always ensure they are wired to schematic wiring otherwise damage to components could be caused.
Location:	Inside the Platform Control Box

© 2026 JCB INDIA LTD

Location Image:	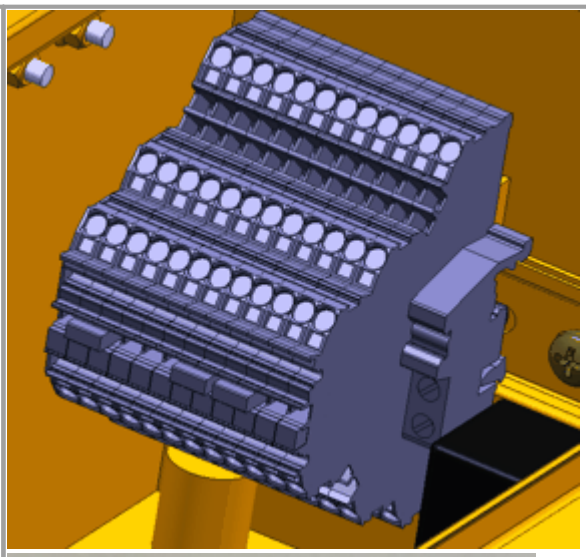 
Signal:	See din rail terminals for location of fitting
Wires & Connectors :	The jumper bars fit into the top of the din rail terminals. Ensure they are fully pushed in and flush with top of din rail terminal for a good connection. 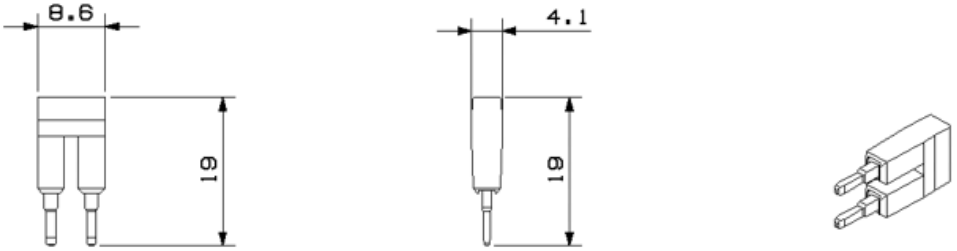

© 2026 JCB INDIA LTD

Internal Electrical Schematic:

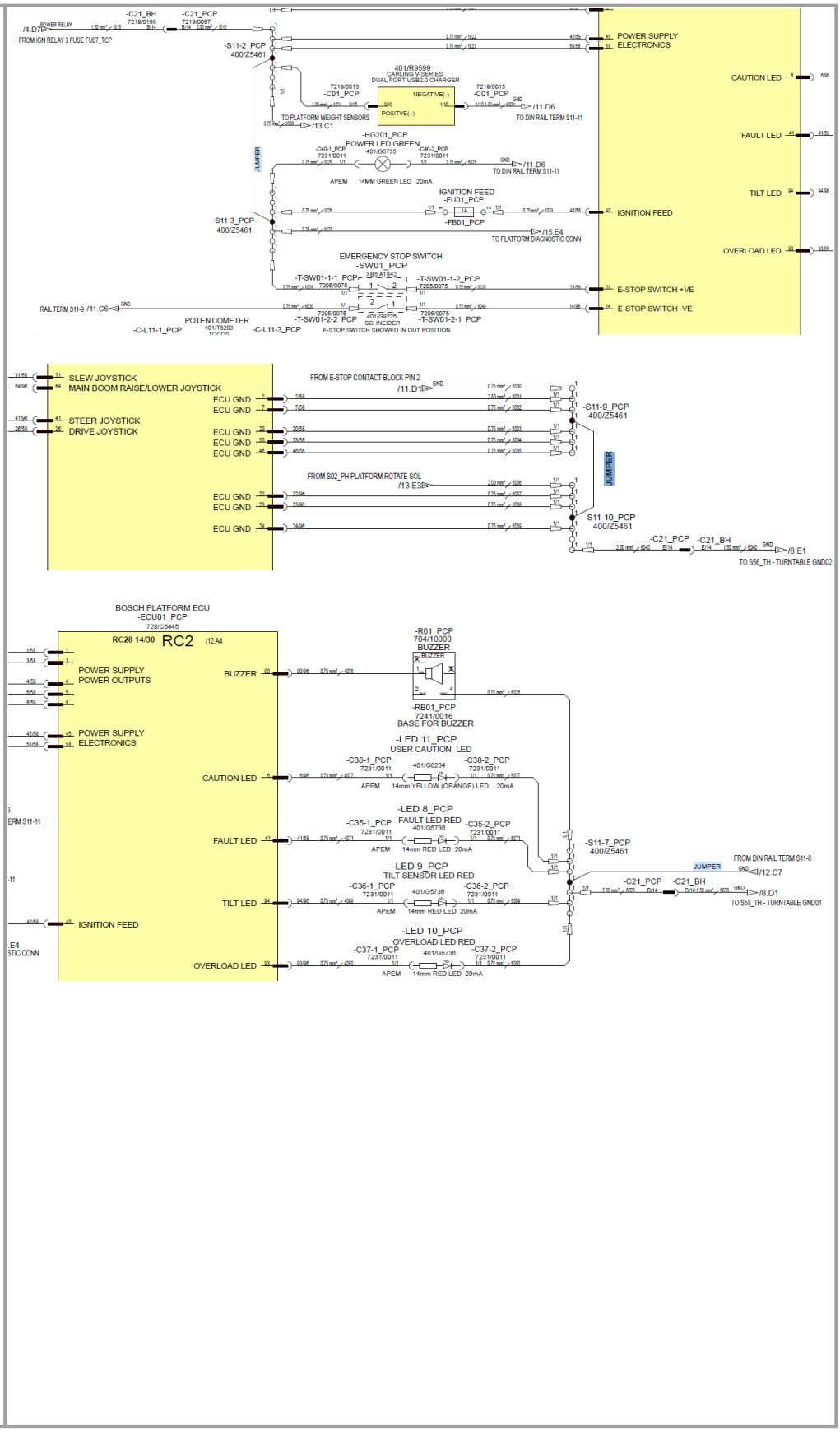

© 2026 JCB INDIA LTD

	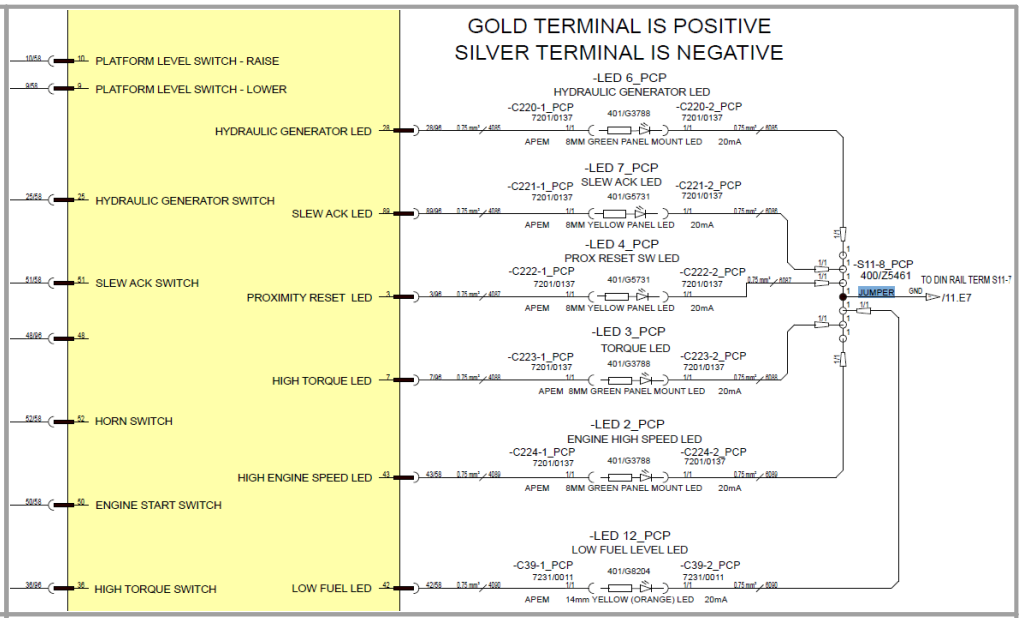
Testing:	Important: Use the multi-meter on the harness connector pins. DO NOT USE the meter on the ECU pins 1. Check jumper bar is inserted properly inside din rail terminals 2. Check continuity between din rail terminals where jumper is fitted it should buzz.
Expected Values:	N/A
Related Fault Codes:	N/A

4.40.31 Din Rail Terminals - Small

Din Rail Terminals - Small

Components 134 > Platform & Control Panel 312 > Din Rail Terminals - Small

Component:	Din Rail Terminals - Small
Function:	•The din rail terminals work live bus bars and allow connections of wires of the same signal.

© 2026 JCB INDIA LTD

	•The din rail terminals can also be joined together using jumper bars. •Each din rail is capable of holding 6 individual wires. •There should always be a bootlace ferrule on the wire before inserting. •There should only be 1 wire per terminal. •A screw driver is required to remove terminals.
Location:	The din rail terminals are located in the platform control panel on the right hand side.
Location Image:	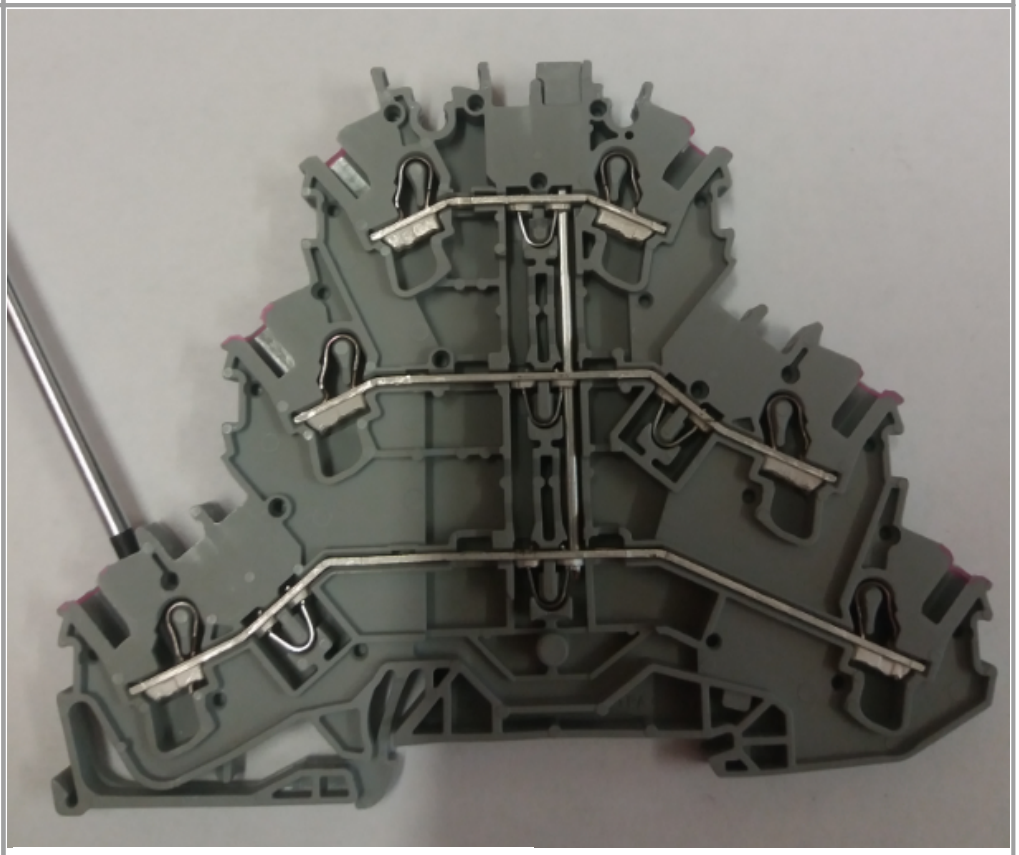 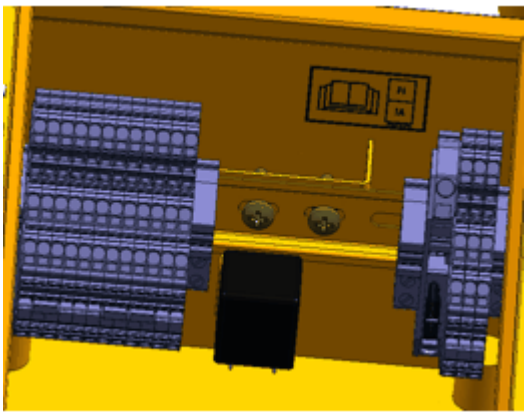

© 2026 JCB INDIA LTD

They clip onto the din rail fixed on the inside of the control box

Signal:

The din rail terminals are not marked with numbering. Because they are a bus bar the wires can be inserted into any slot in the correct din rail terminal.

They may not be in the order described below depending on assembly

S11-1_PCP - main power		
Pin Ident	**Wire number**	**Description**
1	1025	Ignition relay feed in
2	1044	Bosch power supply input
3	1045	Bosch power supply input
4	1046	Bosch power supply input
5	1047	Bosch power supply input
6	1048	Bosch power supply input

S11-2 - main power		
Pin Ident	**Wire number**	**Description**
1	1026	Ignition relay feed in
2	1049	Bosch ecu power supply
3	1050	Bosch ecu power supply
4	1020	
5		
6		
Jumper bar	Jumper to S11-3	

S11-3 - main power		
Pin Ident	**Wire number**	**Description**
1	1051	Power LED Green input
2	1052	Ignition feed to ECU
3	1053	Platform diagnostic connector

© 2026 JCB INDIA LTD

4	1054	E-Stop positive feed
5		
6		
Jumper bar	Jumper to S11-2	
S11-4 - 10V feed		
Pin Ident	**Wire number**	**Description**
1	62	10V input from ECU
2	1058	Feed to Artic boom switch, main boom telescope switch, jib switch
3	1059	Feed to platform rotate switch, platform leveling switch
4	1060	Feed to horn, proxy reset switch (optional), slew acknowledgment switch, hydraulic generator switch
5	1061	Feed to engine start switch, high torque switch, engine speed switch, electric pump switch
6	1075	Crush protection switch contact 2, foot pedal switch
S11-5 - 5V feeds		
Pin Ident	**Wire number**	**Description**
1	4069	5V feed from ECU
2	4099	feed to Crush protection Switch 1
3	1057	feed to Drive/ steer joystick
4	1056	feed to slew/ main boom joystick
5		
6		
S11-6 - 5V GND		
Pin Ident	**Wire number**	**Description**
1	6028	5V GND ECU Connection
2	6026	5V GND for Drive/Steer joystick
3	6025	5V GND for slew/ main boom joystick

© 2026 JCB INDIA LTD

4	6048	5V GND for weight sensor
5		
6		
S11-7 - GND terminal block		
Pin Ident	**Wire number**	**Description**
1	6034	GND feed to base harness
2	6029	Buzzer GND
3	6030	GND for user caution LED
4	6031	GND for fault LED
5	6032	GND for tilt sensor LED
6	6033	GND for overload LED
Jumper	Jumper to S11-8	
S11-8 GND		
Pin Ident	**Wire number**	**Description**
1	6051	GND hydraulic generator LED
2	6052	GND for Slew acknowledgment LED
3	6053	GND for prox reset LED
4	6054	GND for high torque LED
5	6055	GND for engine high speed LED
6	6066	GND for low fuel LED
Jumper	Jumper to S11-7	
S11-9 GND		
Pin Ident	**Wire number**	**Description**
1	6024	GND to Platform E-Stop

© 2026 JCB INDIA LTD

2	6039	ECU GND
3	6040	ECU GND
4	6041	ECU GND
5	6042	ECU GND
6	6043	ECU GND
Jumper	Jumper to S11-10	
S11-10 GND		
Pin Ident	**Wire number**	**Description**
1	6044	GND for platform rotate left and right solenoids, Jib up and down solenoids
2	6045	ECU GND
3	6046	ECU GND
4	6047	ECU GND
5	6049	GND feed to base harness
6		
Jumper	Jumper to S11-9	
S11-11 - GND		
Pin Ident	**Wire number**	**Description**
1	6023	GND for power LED
2	6035	GND for work light LED
3	6021	
4	6036	RC Config pin on ECU
5	6063P	GND feed to base harness
6	6037	GND to diagnostic connector
S11-12 - Worklight		
Pin Ident	**Wire number**	**Description**

© 2026 JCB INDIA LTD

1	8001	input from work light switch
2	8002	Work light LED Feed
3	8003	Work light Feed from switch
4		
5		
6		
S11-15 CAN H J1939		
Pin Ident	**Wire number**	**Description**
1		C21-PCP interconnect feed in pin M
2		diagnostic connector
3		link to S11-18
4		
5		
6		
S11-16 - CAN L J1939		
Pin Ident	**Wire number**	**Description**
1		C21-PCP interconnect feed in pin N
2		diagnostic connector
3		link to S11-19
4		
5		
6		
S11-16 - CAN S J1939		
Pin Ident	**Wire number**	**Description**
1		C21-PCP interconnect feed in pin P

© 2026 JCB INDIA LTD

2		diagnostic connector
3		link to S11-20
4		
5		
6		
S11-18 CAN H J1939		
Pin Ident	**Wire number**	**Description**
1		Bosch ECU Pin 15/58
2		terminating resistor
3		link to S11-15
4		
5		
6		
S11-19 CAN L J1939		
Pin Ident	**Wire number**	**Description**
1		Bosch ECU Pin 16/58
2		terminating resistor
3		link to S11-16
4		
5		
6		
S11-19 CAN S J1939		
Pin Ident	**Wire number**	**Description**
1		Cut end
2		terminating resistor

© 2026 JCB INDIA LTD

	3		link to S11-17
	4		
	5		
	6		
Wires & Connectors :	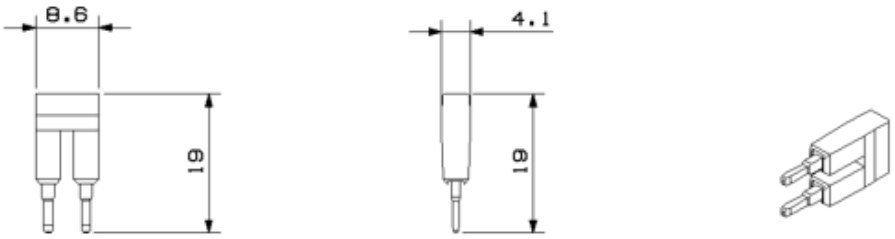		
Internal Electrical Schematic:	Refer Schematic: 401/T6225		
Testing:	Important: Use the multi-meter on the harness connector pins. DO NOT use the meter on the ECU pins 1. Each din rail is capable of holding 6 individual wires. 2. Ensure no water ingress inside the din rail terminals 3. Check ferrule is inserted properly inside din rail 4. Check din rail terminal are placed & locked properly over din rail 5. Check end stops are fitted correctly 6. Check all wires fitted on one din rail terminal should have continuity		
Expected Values:	See Signal		
Related Fault Codes:	N/A		

4.40.32 USB Connection



Components 134 > Platform & Control Panel 312 > USB Connection

© 2026 JCB INDIA LTD

<table>
<tr><td>Component:</td><td>USB Connection</td></tr>
<tr><td>Function:</td><td>•There is a twin port USB connection at the platform for use as a charger device.
•There is no data transfer in either direction and this will make no effect to the machine.</td></tr>
<tr><td>Location:</td><td>The USB connection is located on the front of the platform control box</td></tr>
<tr><td>Location Image:</td><td> 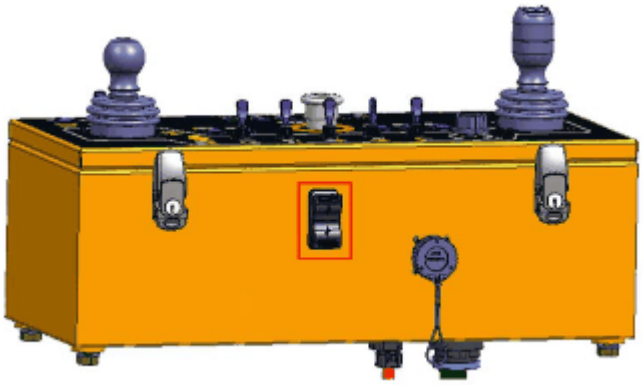 </td></tr>
<tr><td>Signal:</td><td>
<table>
<tr><th>Pin Number</th><th>Description</th><th>Wiring Number</th></tr>
<tr><td>1</td><td>Negative feed</td><td>6024</td></tr>
<tr><td>3</td><td>Positive feed</td><td>1024</td></tr>
</table>
</td></tr>
</table>

© 2026 JCB INDIA LTD

Wires & Connectors :	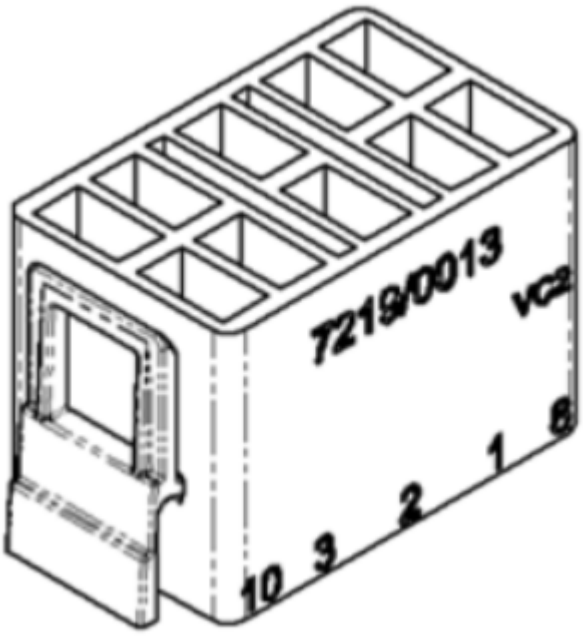
Internal Electrical Schematic:	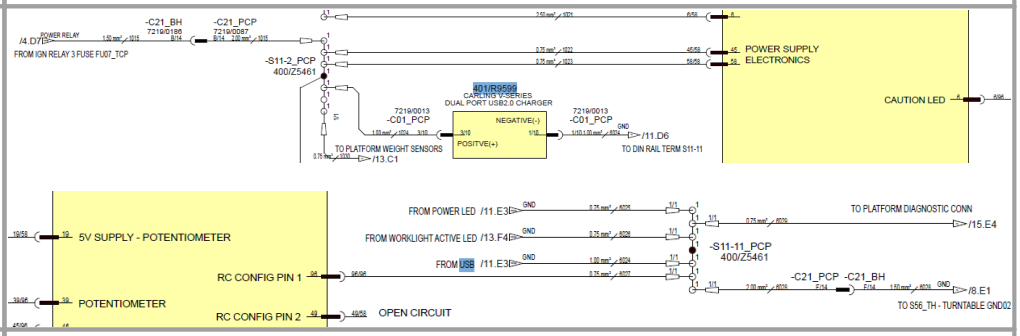
Testing:	Important: Use the multi-meter on the harness connector pins. DO NOT USE the meter on the ECU pins Note-USB connector is fitted on platform control panel to charge the mobile accessories 1. Check if there is any water ingress inside USB 2. Check the supply at connector C01 (Pin 1 and 3). It should read 12V. 3. If there is no 12V supply then need to investigate wiring as per schematic. 4. If there is 12V supply then it may be internal damage to USB. Replace it
Expected Values:	12V
Related Fault Codes:	N/A

© 2026 JCB INDIA LTD

4.41 Turntable Control Panel

Turntable Control Panel

Components 134 > Turntable Control Panel



4.41.1 Ignition Relay

Ignition Relay

Components 134 > Turntable Control Panel 436 > Ignition Relay

© 2026 JCB INDIA LTD

Component :	Ignition Relay
Function:	Ignition Relay is responsible for providing power to the vehicle ignition system, and some of the fuel systems components.
Location:	Ignition Relay is located in Base control panel.Relay R1 is the Ignition Relay

© 2026 JCB INDIA LTD

Location

Image:

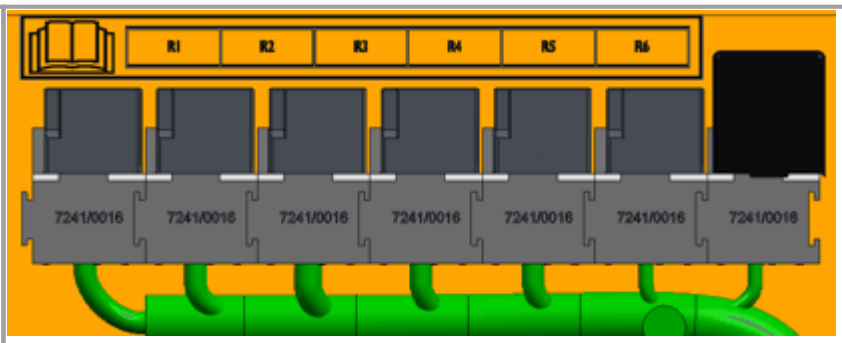

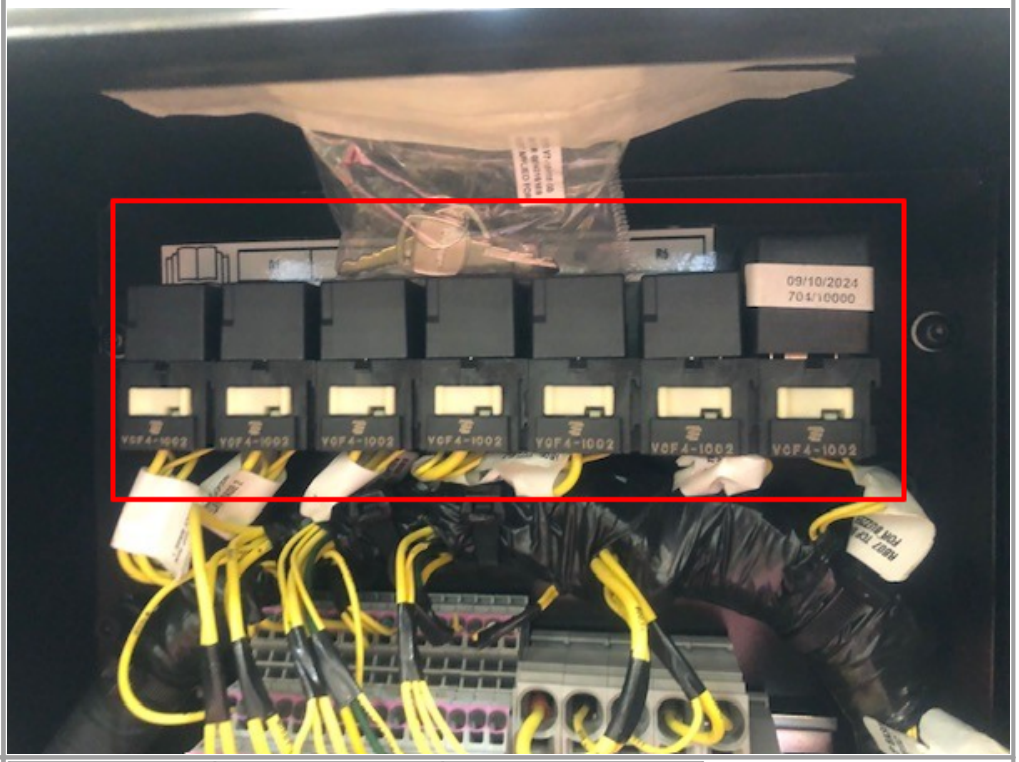

Signal:

Pin Number	Description	Wire Number
1	High Current	1
2	Ground	6001
3	High Current	-
4	12V	3001
5	12V	2001

© 2026 JCB INDIA LTD

Wires & Connectors :	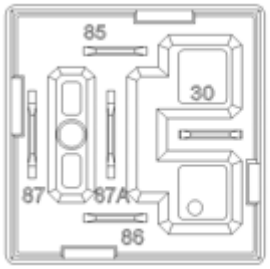 
Internal Electrical Schematic:	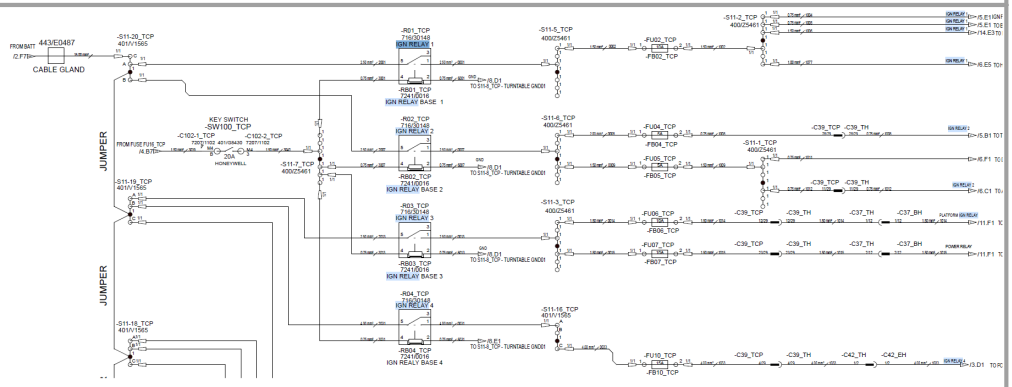
Testing:	Important: Use the multi-meter on the harness connector pins. DO NOT USE the meter on the ECU pins. 1. Remove the relay & use multi meter to measure the resistance between Pin 85 and 86 on the relay 2. Resistance should read 90+/- 10 Ω 3. If reading are incorrect replace the relay if correct check the harness as per schematic 4. If harness continuity is OK replace the relay

© 2026 JCB INDIA LTD

Expected Values:	12V
Related Fault Codes:	N/A

4.41.2 Horn Relay



Horn Relay

Components 134 > Turntable Control Panel 436 > Horn Relay

Component:	Horn Relay
Function:	It serves as the relay that controls power to the vehicle's horn. When current is applied to the relay, the horn's power circuit is completed, allowing the

© 2026 JCB INDIA LTD

	horn to function and ring.
Location:	Horn Relay is located in Base control panel.
Location **Image:**	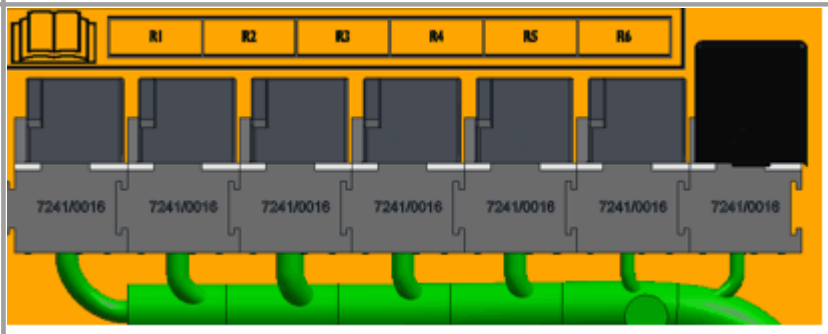 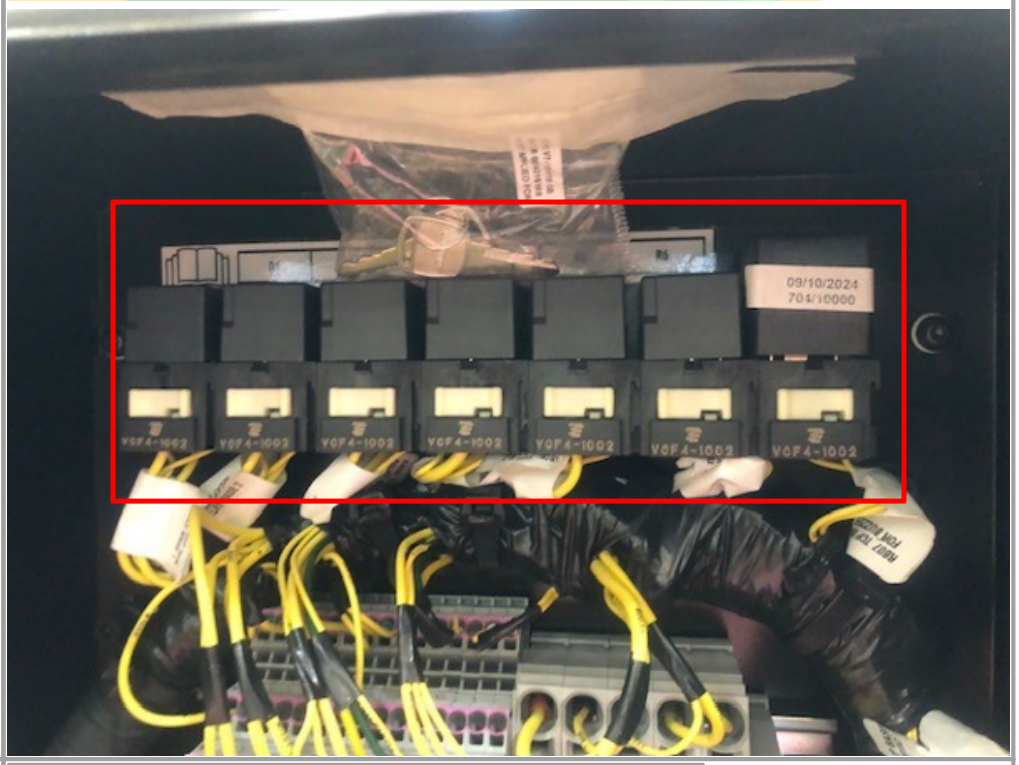
Signal:	

Pin Number	Description	Wire Number
1	High Current	77
2	Ground	6035

© 2026 JCB INDIA LTD

	3	High Current	-
	4	12V	4035
	5	12V	1077

Wires & Connectors :

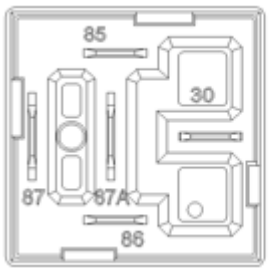



Internal Electrical Schematic:

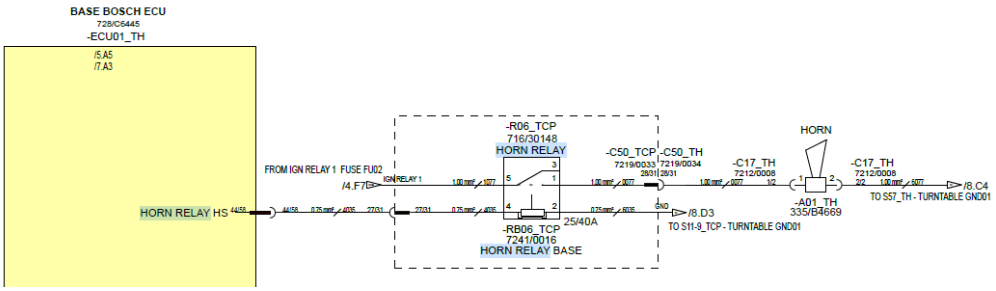

Testing:

Important: Use the multi-meter on the harness connector pins. DO NOT USE the meter on the ECU pins.

1.Remove the relay & use multi meter to measure the resistance between Pin 85 and 86 on the relay

2. Resistance should read 90+/- 10 Ω

© 2026 JCB INDIA LTD

	3. If reading are incorrect replace the relay if correct check the harness as per schematic 4. If harness continuity is OK replace the relay.
Expected Values:	12V
Related Fault Codes:	**Fault Code** / **Fault Description** B1181-16 729 — Horn relay - Circuit short to low B1182-13 730 — Horn relay - Circuit open

4.41.3 D+ Relay



Components 134 > Turntable Control Panel 436 > D+ Relay

© 2026 JCB INDIA LTD

Component :	D+ Relay
Function:	•The base ECU shall receive a 12V alternator signal feed when the alternator is working from D+ relay. •If there is a 12V input from D+ relay and the engine is off the alternator icon should be lit. •If there is no 12V feed from D+ relay but engine is running then identify as fault and turn icon on display, fault led at platform and buzzer in both locations.
Location:	D+ Relay is located in Base control panel. Relay R5 is the D+ Relay

© 2026 JCB INDIA LTD

Location

Image:

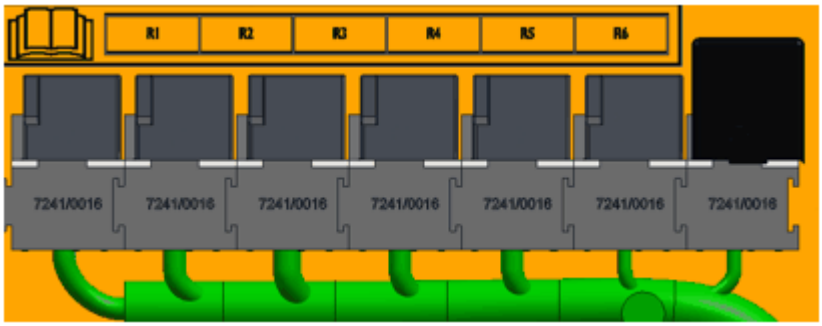



Signal:

Pin Number	Description	Wire Number
1	High Current	34
2	Ground	6034
3	High Current	-
4	12 V	4034
5	12 V	2034

© 2026 JCB INDIA LTD

Wires & Connectors :	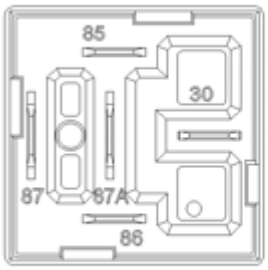 
Internal Electrical Schematic:	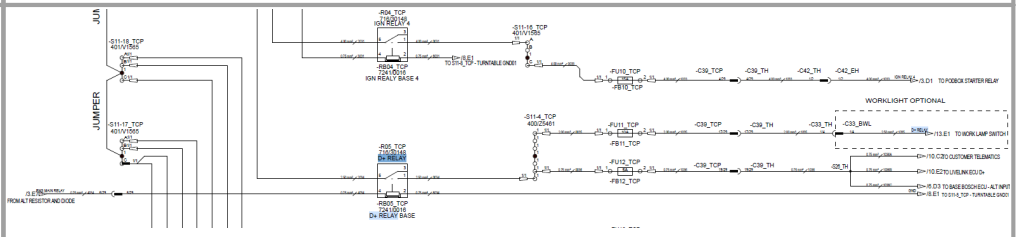
Testing:	Important: Use the multi-meter on the harness connector pins. DO NOT USE the meter on the ECU pins. 1. Remove the relay & use multi meter to measure the resistance between Pin 85 and 86 on the relay 2. Resistance should read 90+/- 10 Ω 3. If reading are incorrect replace the relay if correct check the harness as per schematic 4. If harness continuity is OK replace the relay.

© 2026 JCB INDIA LTD

Expected Values:	12V
Related Fault Codes:	**Fault Code** / **Fault Description** B1300-2F 846 — ALTERNATOR FAULT

4.41.4 Fusing Turntable Control Panel



Components 134 > Turntable Control Panel 436 > Fusing Turntable Control Panel

Component:	Fusing Turntable Control Panel
Function:	The Fuses are to provide power to the controllers and devices of the machine.

© 2026 JCB INDIA LTD

Location:	The Fuses are fitted into Din Rail Fuse Holder

© 2026 JCB INDIA LTD

Location **Image:**	

© 2026 JCB INDIA LTD



© 2026 JCB INDIA LTD

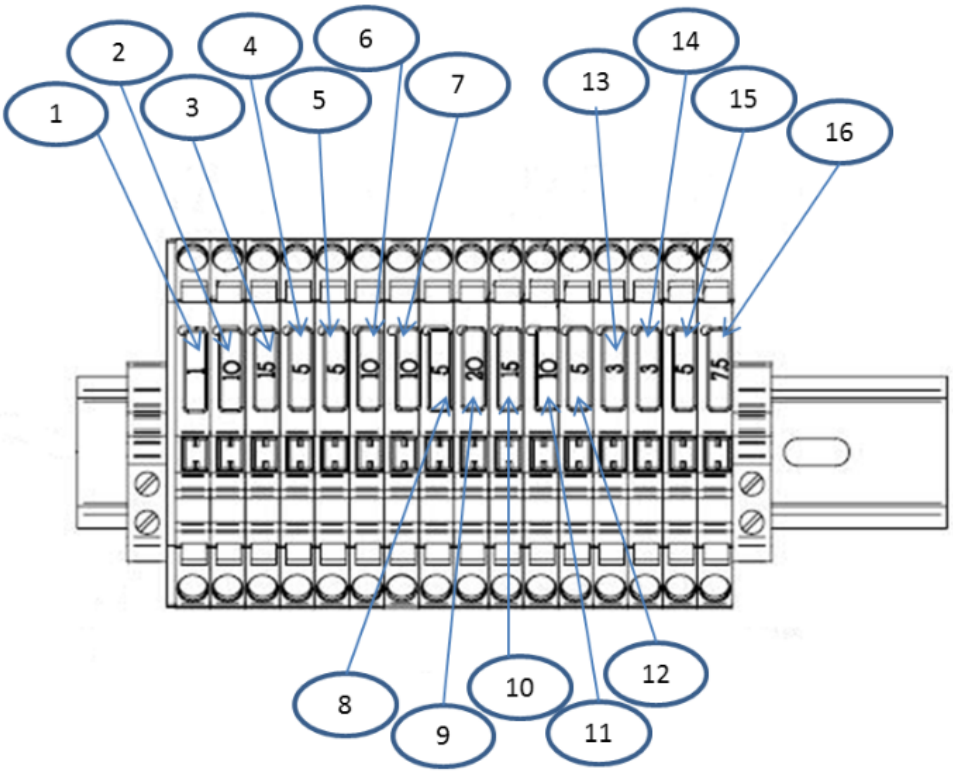

Shows the Fuse Ratings for Turntable control panel

Number	Fuse Rating	Description	Schematic Ident
1	1A	Ignition Fuse	FU1_TCP
2	10A	Base E-Stop, Horn Relay, Diagnostic connector	FU2_TCP
3	15A	Bosch ECU Base	FU3_TCP
4	5A	Platform weight sensor, Tilt Sensor	FU4_TCP
5	5A	Display, Axle Lock pressure Sensor	FU5_TCP

© 2026 JCB INDIA LTD

6	10A	Bosch ECU Platform supply	FU6_TCP
7	10A	Bosch ECU Platform supply	FU7_TCP
8	5A	Bosch ECU Base supply	FU8_TCP
9	20A	Engine Pod box Power hold relay	FU9_TCP
10	15A	Engine Pod box Starter Relay	FU10_TCP
11	10A	Work light (Optional)	FU11_TCP
12	5A	Engine run signal for Telematics and Bosch ECU base	FU12_TCP
13	3A	Livelink	FU13_TCP
14	3A	Display	FU14_TCP
15	5A	Engine Pod box power hold coil	FU15_TCP
16	7.5A	Key Switch	FU16_TCP

Signal:

Fuse	Wire in	Wire out
FU01_TCP Ignition Fuse	1013 from ignition relay 1	0040 to Bosch ecu, Livelink, customer Telematics
FU02_TCP Ignition Fuse	0024 from S11-7_TCP	1012 to S11-4_TCP

© 2026 JCB INDIA LTD

	FU03_TCP Ignition Fuse	0025 from S11-7_TCP	1018 to Bosch ECU
	FU04_TCP Ignition Fuse	0028 from S11-8_TCP	1083 to S11-1_TCP
	FU05_TCP Ignition Fuse	0029 from S11-8_TCP	1084 to S11-3_TCP
	FU06_TCP Ignition Fuse	0032 from S11-5_TCP	1025 to platform ecu supply
	FU07_TCP Ignition Fuse	0033 from S11-5_TCP	1026 to platform ecu supply
	FU08_TCP Ignition Fuse	0036 from S11-5_TCP	1029 to Bosch base ecu
	FU09_TCP Ignition Fuse	0034 from S11-2_TCP	0034 to pod box power hold relay
	FU10_TCP Ignition Fuse	0035 from S11-2_TCP	0035 to pod box starter relay
	FU11_TCP Ignition Fuse	0039 from S11-6_TCP	1031 Work light (optional fit)

© 2026 JCB INDIA LTD

	FU12_TCP Ignition Fuse	0038 from S11-6_TCP	1032 customer Telematics, Livelink D+ and Bosch ecu D+ input
	FU13_TCP Permanent Fuse	2005 from S11-23_TCP	3004 Livelink
	FU14_TCP Permanent Fuse	2006 from S11-23_TCP	3003 to Display
	FU15_TCP Permanent Fuse	2007 from S11-23_TCP	3002 to pod box power hold coil
	FU16_TCP Permanent Fuse	2008 from S11-23_TCP	3001 to key switch

© 2026 JCB INDIA LTD

Wires & Connectors :	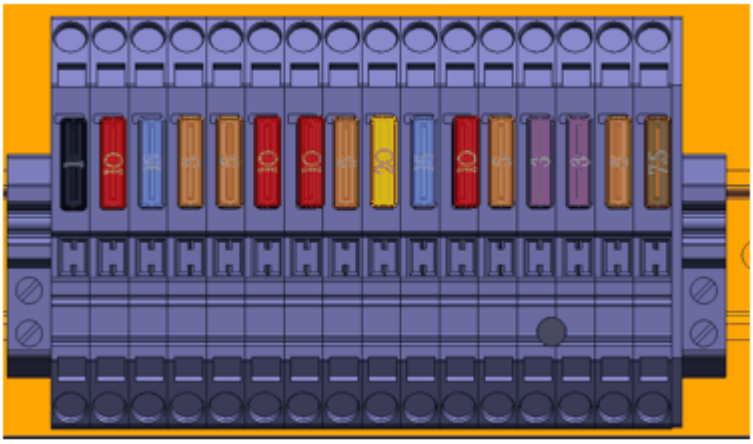 
Internal Electrical Schematic:	
Testing:	Important: Use the multi-meter on the harness connector pins. DO NOT USE the meter on the ECU pins 1. To test the fuse terminal block set a multiple to continuity

© 2026 JCB INDIA LTD

	2. remove fuse and check one side of block to the other there should be no connection 3. insert a fuse and then test one end of terminal block to the other side and now there should be continuity.
Expected Values:	N/A
Related Fault Codes:	N/A

4.41.5 Large Jumper Bar



Components 134 > Turntable Control Panel 436 > Large Jumper Bar

© 2026 JCB INDIA LTD

Component:	Large Jumper Bar
Function:	•The jumper bars are to make electrical connection between the din rail terminals. •This allows for connections to be made from one din rail terminal to another. •There is 2 different sizes of Jumper bar dependent on the terminal block size they fit into and multiple configurations dependent on number of ways are available.
Location:	Below shows an image of a 5 Way Large Jumper Bar. This is for example only.

© 2026 JCB INDIA LTD

Location Image:	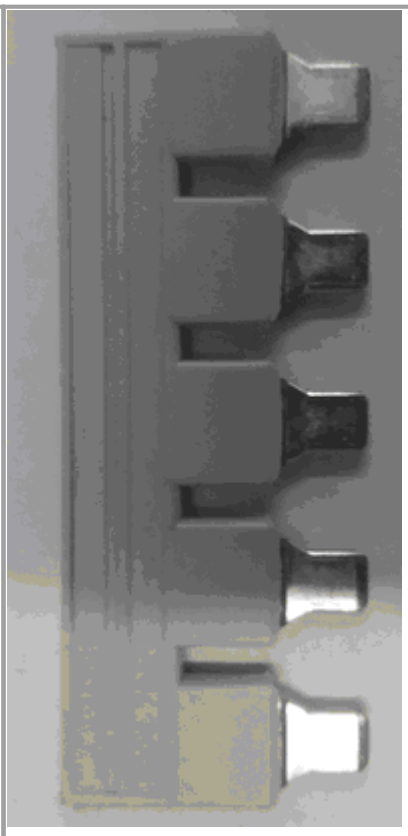 The large jumper bars are connecting the main power in on the large terminal blocks in the turntable control panel.
Signal:	The Large jumper bars in the turntable control panel will connect up the 12V Permanent power. Always take care when working with permanent feed.
Wires & Connec	The Jumper bar connects S11-21_TCP, S11-22_TCP, S11-23_TCP, S11-24_TCP

© 2026 JCB INDIA LTD

tors:	
Internal **Electric** **al** **Schema** **tic:**	A 3 way version of the large jumper bar is used in the turntable control panel 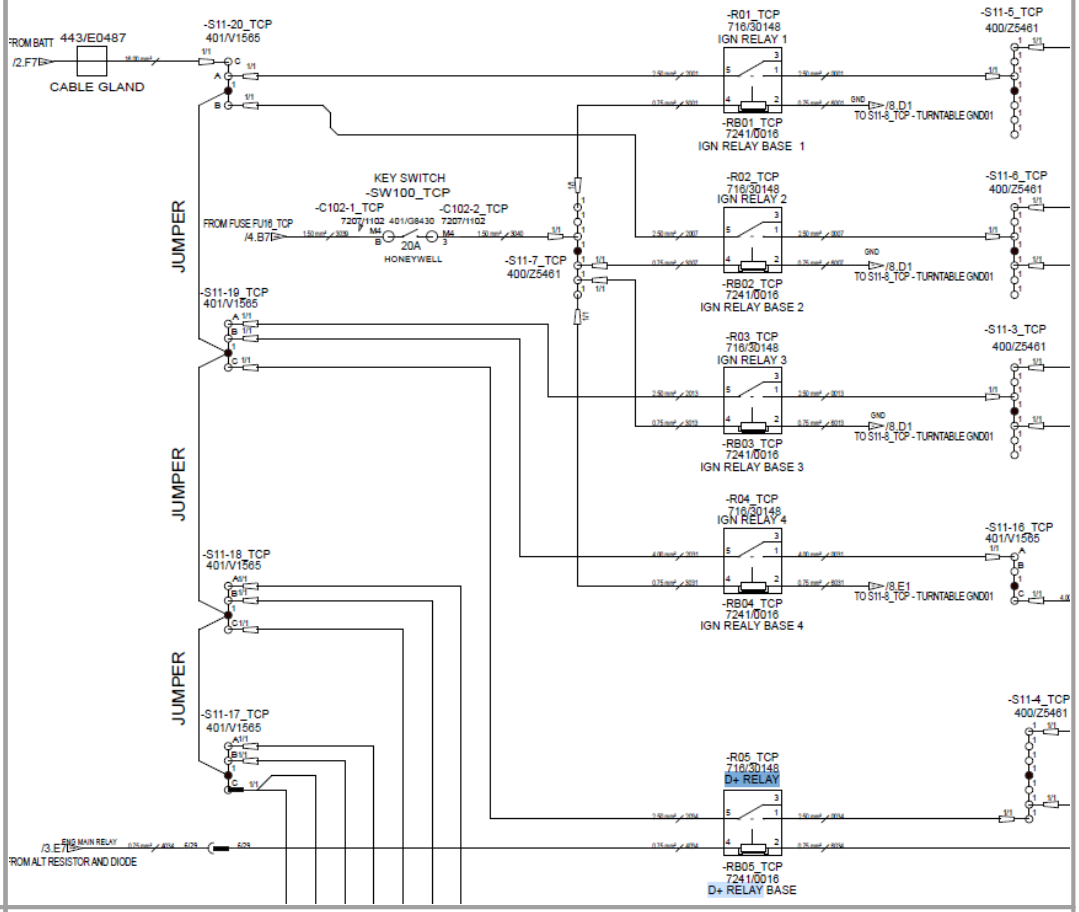
Testing:	Important: Use the multi-meter on the harness connector pins. DO NOT USE the meter on the ECU pins. 1.Ensure power of the machine is turned off. Do not work live. 2.Test continuity from one terminal block to another, If no continuity remove jumper bar and test in isolation.

© 2026 JCB INDIA LTD

	3.Failure of continuity will need the jumper bar replacing.
Expected Values:	N/A
Related Fault Codes:	N/A

4.41.6 Ignition Switch



Components 134 > Turntable Control Panel 436 > Ignition Switch

© 2026 JCB INDIA LTD

Component :	Ignition Switch
Function:	•Ignition switch is used for Turn ON / OFF the machine power (Ignition signal).The key is not removable in the ON position. Base Bosch ECU controls the Engine ignition feed. •The Key is a 455 industry standard Key and not a JCB machine key.
Location:	Key switch located at base, on the Turntable control panel.
Location Image:	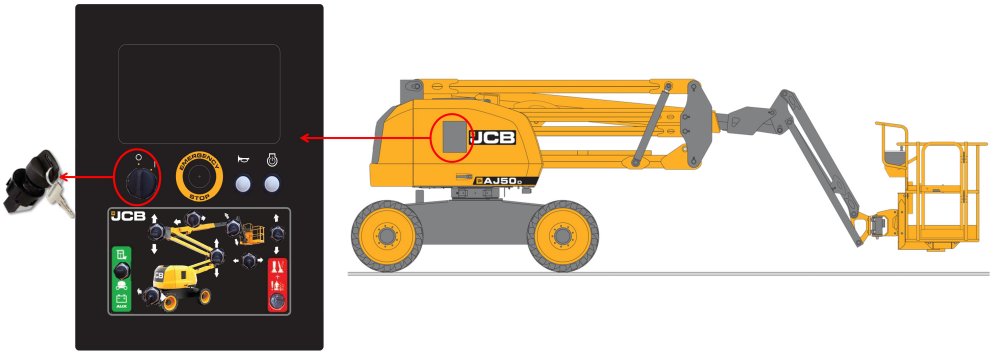

Signal:

Pin Number	Description	Wire Number
B	Feed	3039
3	Switched Output	3040

© 2026 JCB INDIA LTD

Wires & Connectors:	The connections are ring terminal on the harness and screw terminals into the ignition switch. The ignition has numbers impressed into the molding at the bottom, they are small and some are on the outer ring. 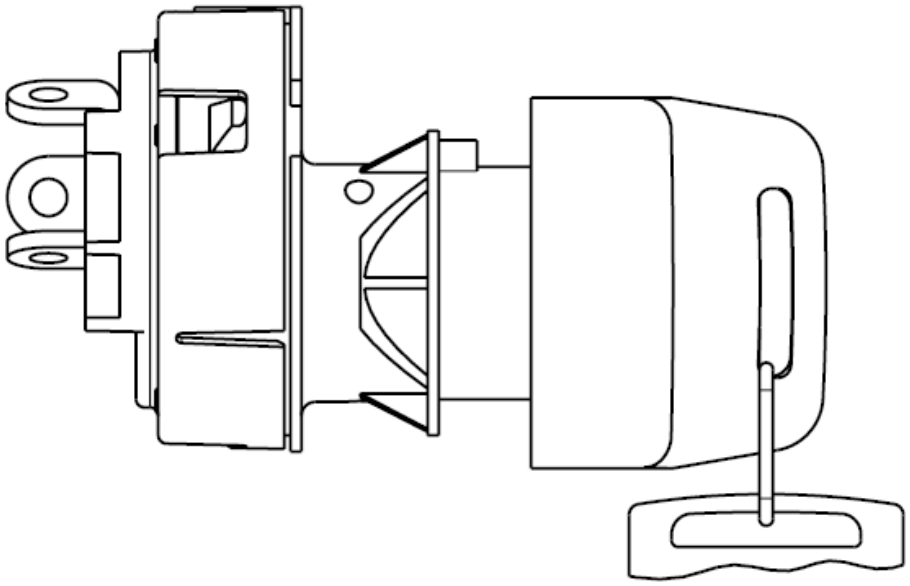 The screws are provided with the ignition key barrel. Be careful they do not get lost.
Internal Electrical Schematic:	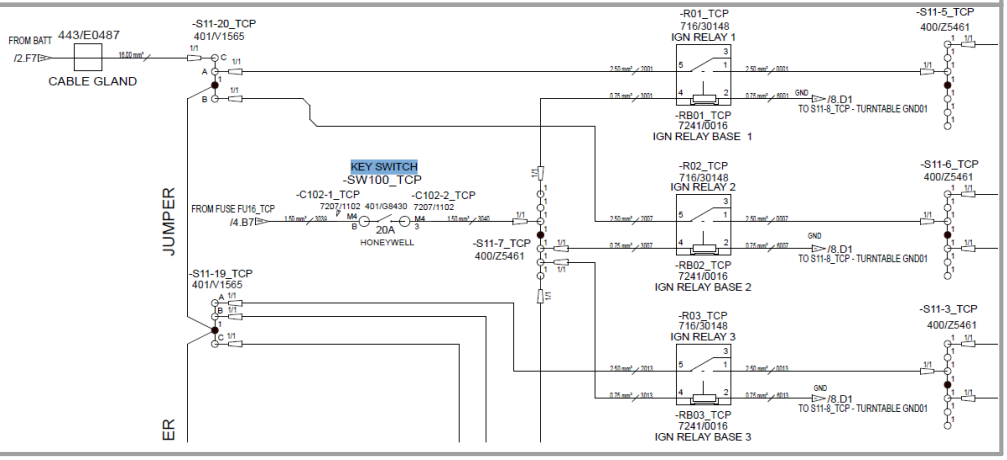

© 2026 JCB INDIA LTD

Testing:	Important: Use the multi-meter on the harness connector pins. DO NOT USE the meter on the ECU pins. 1.Take multimeter and Check the multimeter is working 2.Set the multimeter in continuity mode (Sound wave or Diode or both) 3.Place the red probe on one of the terminals on the switch and black probe on other terminal on the switch.  4.In Key switch in OFF position, Multimeter should read as 'OL' (open circuit)

© 2026 JCB INDIA LTD

	5.In Key switch in ON position, Multimeter should read as '1' or less. 6.Operate the switch in ON and OFF in few more times. Multimeter reading should change while operating from ON to OFF. If the reading doesn't change means key switch is defective 7.Replace the defective key switch with part number.
Expected Values:	12V
Related Fault Codes:	**Fault Code** / **Fault Description** B1357-16 (904) — ENGINE CRANK SC to Low B1358-13 (905) — ENGINE CRANK SC to High or OC

4.41.7 Emergency STOP Switch(TCP)



Components (134) > Turntable Control Panel (436) > Emergency STOP Switch(TCP)

© 2026 JCB INDIA LTD

<table>
<tr><td>Component :</td><td>Emergency STOP Switch(TCP)</td></tr>
<tr><td>Function:</td><td>Emergency stop switch will cut off the Engine and all ECU outputs except CAN. Display and Bosch ECU are remain in the ON. It is equipped with 2 normally closed contacts, one has +12V and other one has GND signals.</td></tr>
<tr><td>Location:</td><td>E-STOP switch located in Base, on the Turntable control panel.</td></tr>
<tr><td>Location Image:</td><td> 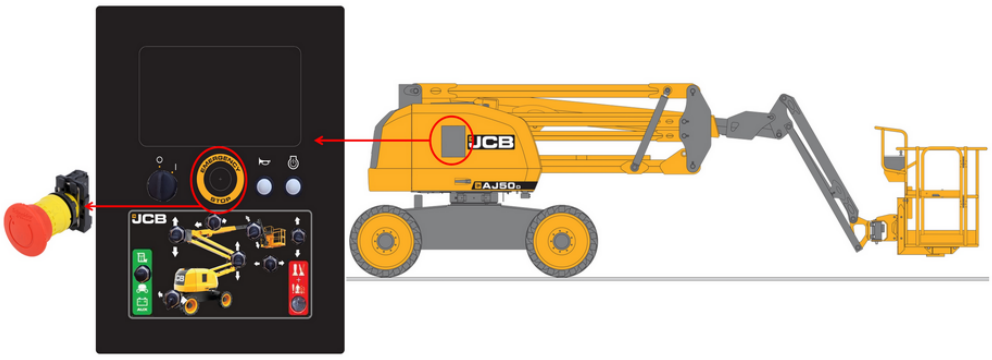
</td></tr>
<tr><td>Signal:</td><td>
<table>
<tr><th>Pin Number and contactor block</th><th>Description</th><th>Connector number</th><th>Wire number</th></tr>
<tr><td>contact 1 NC pin 1</td><td>12V feed</td><td>T-SW-01-1-1_TCP</td><td>3046</td></tr>
<tr><td>contact 1 NC pin 2</td><td>Output to platform ECU</td><td>T-SW-01-1-2_TCP</td><td>3049</td></tr>
</table>
</td></tr>
</table>

© 2026 JCB INDIA LTD

	contact 2 NC pin 2	GND feed	T-SW-01-2-2_TCP	6005
	contact 2 NC pin 1	Output to ECU	T-SW-01-2-1_TCP	6006
Wires & Connectors :	Wires and Connectors: 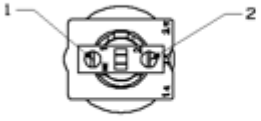 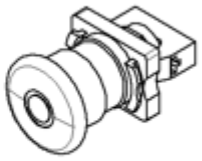 PIN OUT: PIN 1 - INPUT PIN 2 - OUTPUT			
Internal Electrical Schematic:	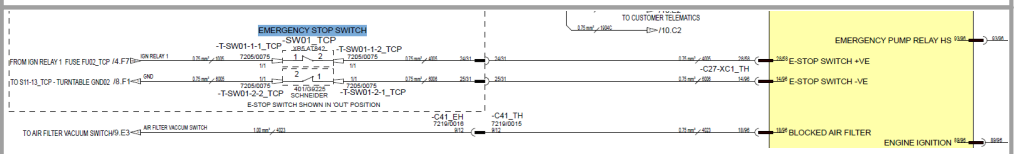 			
Testing:	Important: Use the multi-meter on the harness connector pins. DO NOT USE the meter on the ECU pins. 1. Do the below steps for both contacts separately. 2. Take multimeter and check the multi meter is working			

© 2026 JCB INDIA LTD

3. Set the multimeter in continuity mode (Sound wave or Diode or both)

4. Place the red probe on one of the terminal on the switch and black probe on other terminal on the switch.



5. In E-Stop switch in PUSHED IN state, Multimeter should read as 'OL' (open circuit)

6. In E-Stop switch in OUT state, Multimeter should read as '1' or less.

7. Operate the switch in PUSHED IN and OUT state in few more times. Multimeter reading should change while operating from PUSHED IN to OUT. If the reading doesn't change means E-Stop switch is defective

© 2026 JCB INDIA LTD

	8. Replace the defective E-Stop switch with same type and size, please contact JCB Service department.
Expected Values:	12V
Related Fault Codes:	<table><tr><th>Fault Code</th><th>Description</th></tr><tr><td>B1001-17 544</td><td>E-stop turntable button - Signal plausibility failure</td></tr></table>

4.41.8 Slew Switch(TCP)



Components 134 > Turntable Control Panel 436 > Slew Switch(TCP)

Component :	Slew Switch(TCP)

© 2026 JCB INDIA LTD

Function:	Slew switch is for slew the Machine i.e. Chassis part stays standstill and the upper portion of the machine slew either right or left.
Location:	Slew switch located at base, on the Turntable control panel.
Location Image:	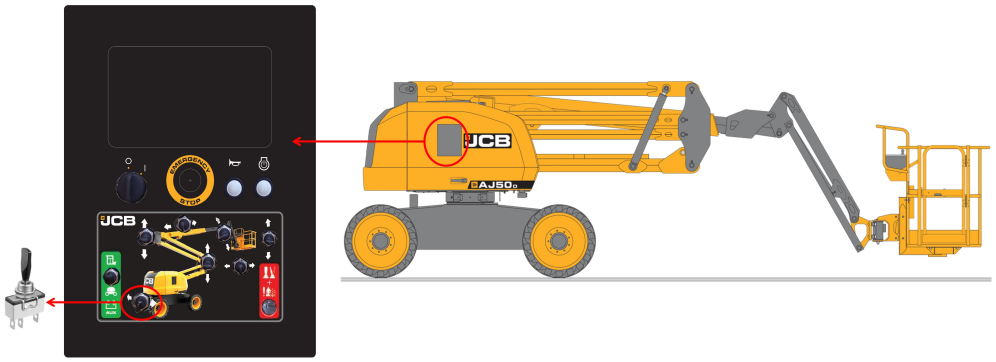

Signal:

Pin Number	Description/ Signal	Connector number	Wire number(s)	Voltage with switch unpressed	Voltage with switch pressed
1	Slew Right	C110-1_TCP	48	2.7 V	10V
2	Power in (10V)	C110-2_TCP	1047	10V	NA
3	Slew Left	C110-3_TCP	49	3.4 V	10V

© 2026 JCB INDIA LTD

Wires & Connectors :	 
Internal Electrical Schematic:	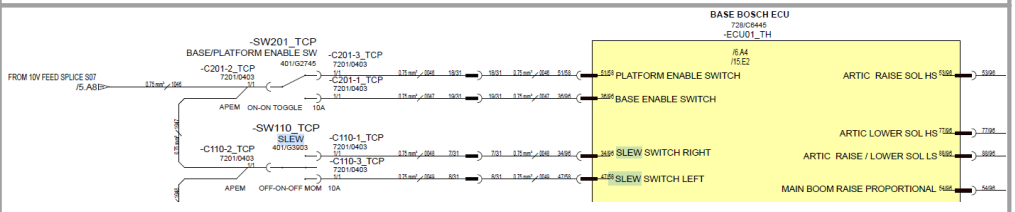
Testing:	Important: Use the multi-meter on the harness connector pins. DO NOT USE the meter on the ECU pins 1. There are3 contact on the back of switch.

© 2026 JCB INDIA LTD

	2. Check terminal 1,2 & 3 connected correctly with wiring harness terminal 1,2 & 3 respectively. 3. Terminal 2 is for incoming supply 4. Check continuity between terminal 2 & terminal 3 and terminal 2 & terminal 1. It should buzz for one combination and should not buzz for other. When switch is pressed, it should buzz vice verse. 5. Check supply at terminal 2. It should read 10V. 6. If there is no 10V then investigate wiring as per schematic. 7. If there is 10V available and continuity is OK then it should be internal damage to switch. Replace it.
Expected Values:	12V
Related Fault Codes:	

Fault Code	Fault Description
B1121-17 675	Slew turntable switch right function - Circuit short to high (10v)
B1122-17 676	Slew turntable switch left function - Circuit short to high (10v)
B1123-92 678	Slew turntable switch both functions - Circuit short to high (10v)
B1124-16 679	Slew turntable switch right function - Circuit short to low
B1125-16 681	Slew turntable switch left function - Circuit short to low

© 2026 JCB INDIA LTD

4.41.9 Horn Switch(TCP)

Horn Switch(TCP)

Components 134 > Turntable Control Panel 436 > Horn Switch(TCP)

Component :	Horn Switch(TCP)
Function:	Horn switch is for audible warning that the operator can use.
Location:	Horn switch located at base, on the Turntable control panel.
Location Image:	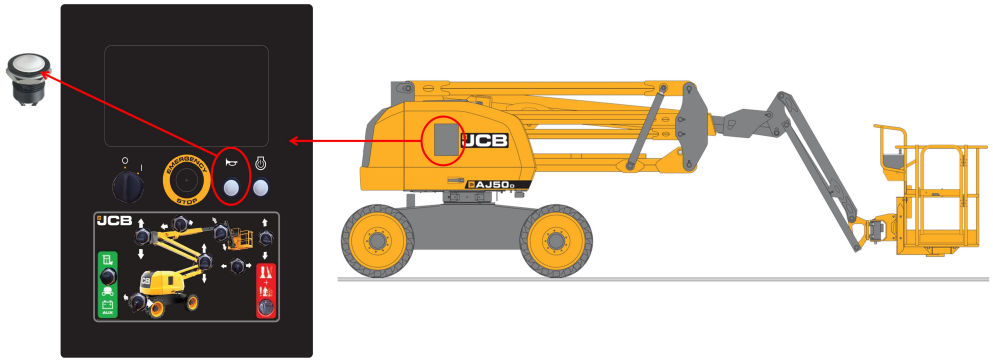
Signal:	

Pin Number	Description	Connector number	Wire number(s)	Voltage unpressed	Voltage pressed

© 2026 JCB INDIA LTD

	1	10V input	C101-2_TCP	1065		
	2	Signal output to ECU (10V when pressed)	C101-1_TCP	65		10V
Wires & Connectors :	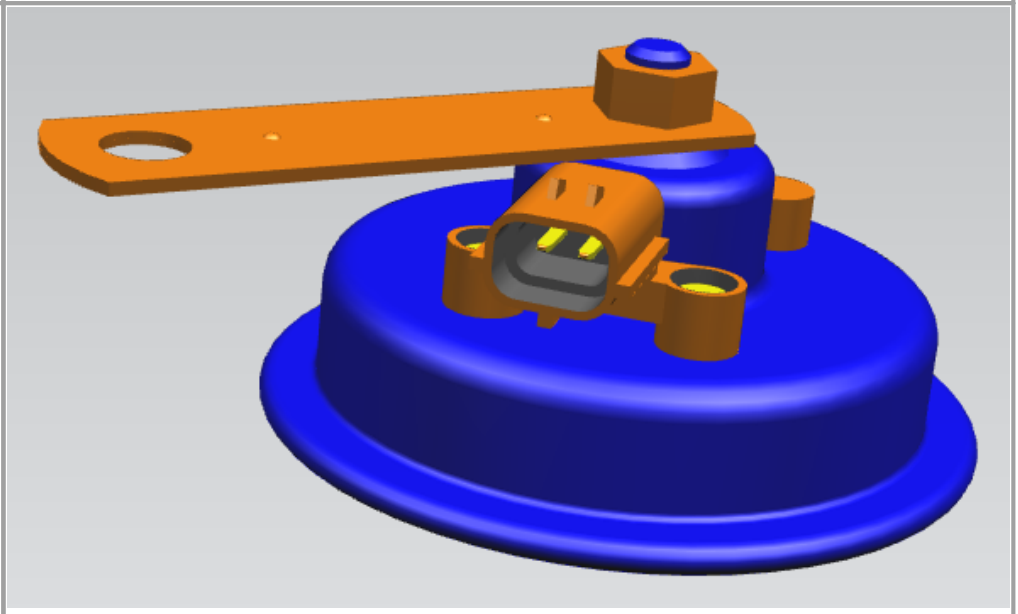					

© 2026 JCB INDIA LTD

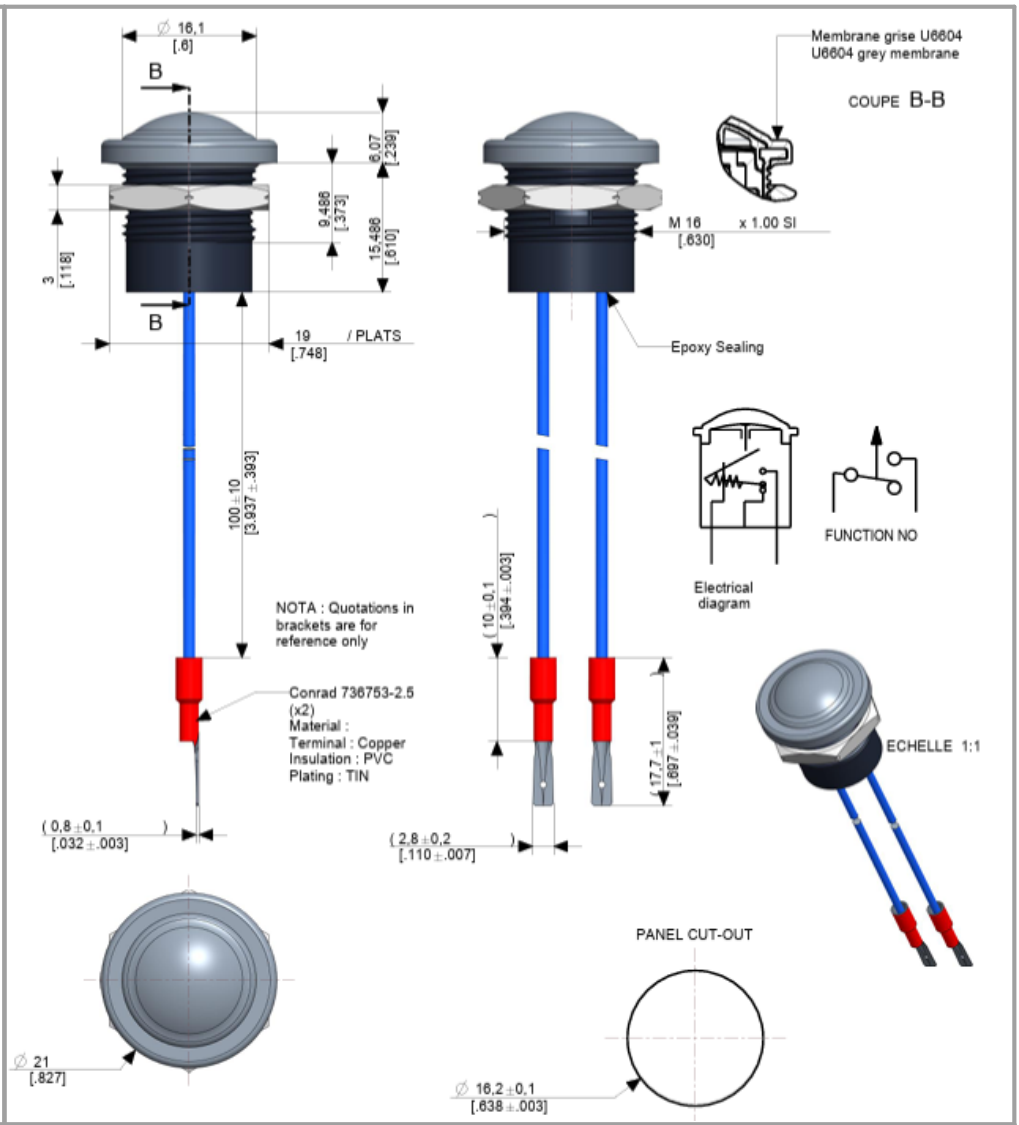

Internal

Electrical

Schematic:

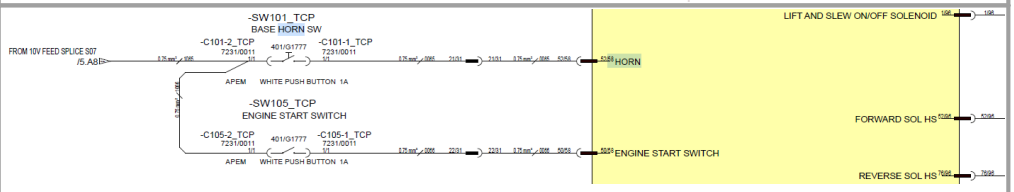

© 2026 JCB INDIA LTD

Testing:	Important: Use the multi-meter on the harness connector pins. DO NOT USE the meter on the ECU pins Refer Test the Push Button Note-All the bush button fitted on machine are 10V ,normally open and closed when pressed Diagnostic feedback on push button are coming from ECU 1. Check supply at wiring harness terminal-1 with (respect to ground) on push button (when not pressed). It should read 10V. 2. Check the voltage at wiring harness terminal-2 on push button (When not pressed). It should read 2-3V 3. Check the continuity between terminal 1 & 2 after pressing the push button. It should buzz. 4. If there is continuity and we are getting 10V supply then it may be internal damage to push button. 5. If issue still there replace the push button.
Expected Values:	12V

© 2026 JCB INDIA LTD

Related Fault Codes:	**Fault Code**	**Fault Description**
	B1206-17 755	Horn turntable button - Circuit short to high (10v)
	B1207-16 757	Horn turntable button - Circuit short to low
	B1208-24 758	Horn turntable button - Signal stuck high

4.41.10 Large Din Rail Terminal

Large Din Rail Terminal

Components 134 > Turntable Control Panel 436 > Large Din Rail Terminal

Component:	Large Din Rail Terminal
Function:	•The Terminal blocks are to allow for connections of signal to a common feed. •In the turntable control panel these are used to distribute the main 12V permanent feed in.

© 2026 JCB INDIA LTD

	•Always ensure bootlace ferrules are fitted to wire ends before inserting into a terminal block
Location:	Inside the Base Control Box

© 2026 JCB INDIA LTD

Location **Image:**	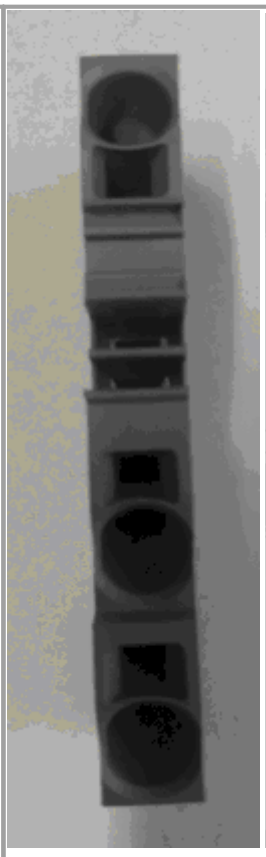  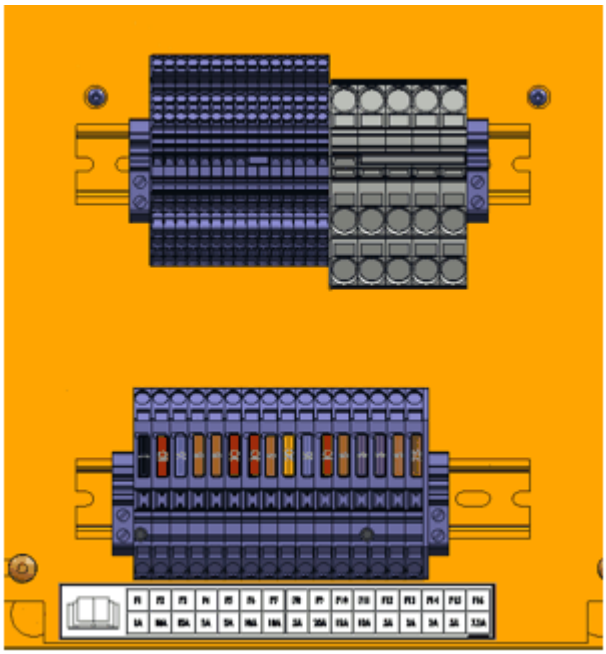

© 2026 JCB INDIA LTD

Signal:

The signal from all of the above terminal blocks is 12V permanent feed to provide power to the ignition relays.

Wires & Connectors :

S11-21_TCP		
Signal	**Wire Number**	**Wire Size**
Main Feed in	Battery lead feed in	16mm
12V to Ign Relay 1 Contacts	2000	2.5mm2
12V to Ign Relay 2 Contacts	2001	2.5mm2
S11-22_TCP		
Signal	**Wire Number**	**Wire Size**
12V to Ign Relay 3 Contacts	2002	2.5mm2
12V to Ign Relay 4 Contacts	2003	2.5mm2
12V to Ign D+ Relay Contacts	2004	2.5mm2
S11-23_TCP		
Signal	**Wire Number**	**Wire Size**
12V to FU13_TCP Fuse	2005	0.75mm2
12V to FU14_TCP Fuse	2006	0.75mm2

© 2026 JCB INDIA LTD

	12V to FU15_TCP Fuse	2007	1.00mm2
	S11-24_TCP		
	Signal	**Wire Number**	**Wire Size**
	12V to FU16_TCP Fuse	2008	1.5mm2
	Spare		
	Spare		
Internal Electrical Schematic:			
Testing:	Important: Use the multi-meter on the harness connector pins. DO NOT USE the meter on the ECU pins. 1. Each din rail is capable of holding 3 individual wires. 2. Ensure no water ingress inside the din rail terminals. 3. Check ferrule is inserted properly inside din rail.		

© 2026 JCB INDIA LTD

	4. Check din rail terminal are placed & locked properly over din rail. 5. Check end stops are fitted correctly. 6. Check all wires fitted on one din rail terminal should have continuity.
Expected Values:	See Signal
Related Fault Codes:	N/A

4.41.11 Engine Start Switch(TCP)



Components 134 > Turntable Control Panel 436 > Engine Start Switch(TCP)

© 2026 JCB INDIA LTD

Component :	Engine Start Switch(TCP)
Function:	Engine start switch is to start / Crank the engine. Engine crank only possible if Ignition signal available at Engine (Key switch should be turned ON).
Location:	Engine start switch located at base, on the Turntable control panel.
Location Image:	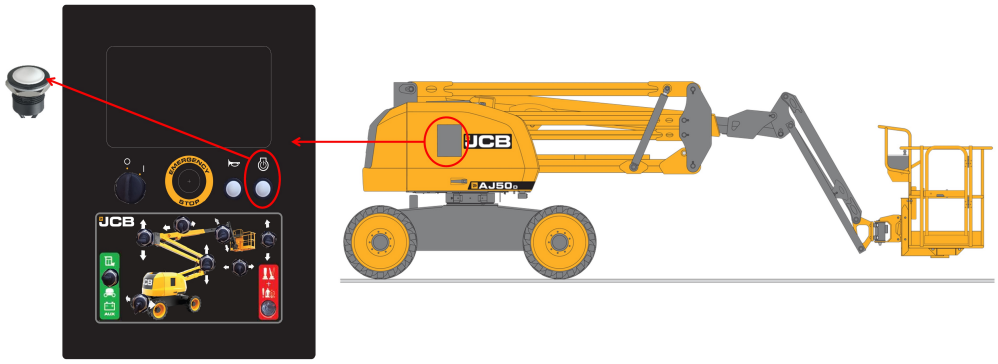

Signal:

Pin Number	Description	Connector number	Wire number (s)	Voltage unpressed	Voltage pressed
1	10V input	C105-2_TCP	1066	10V	10V
2	Signal output to ECU (10V when	C105-1_TCP	0066	0V	10V

© 2026 JCB INDIA LTD

	pressed)					
Wires & Connectors :	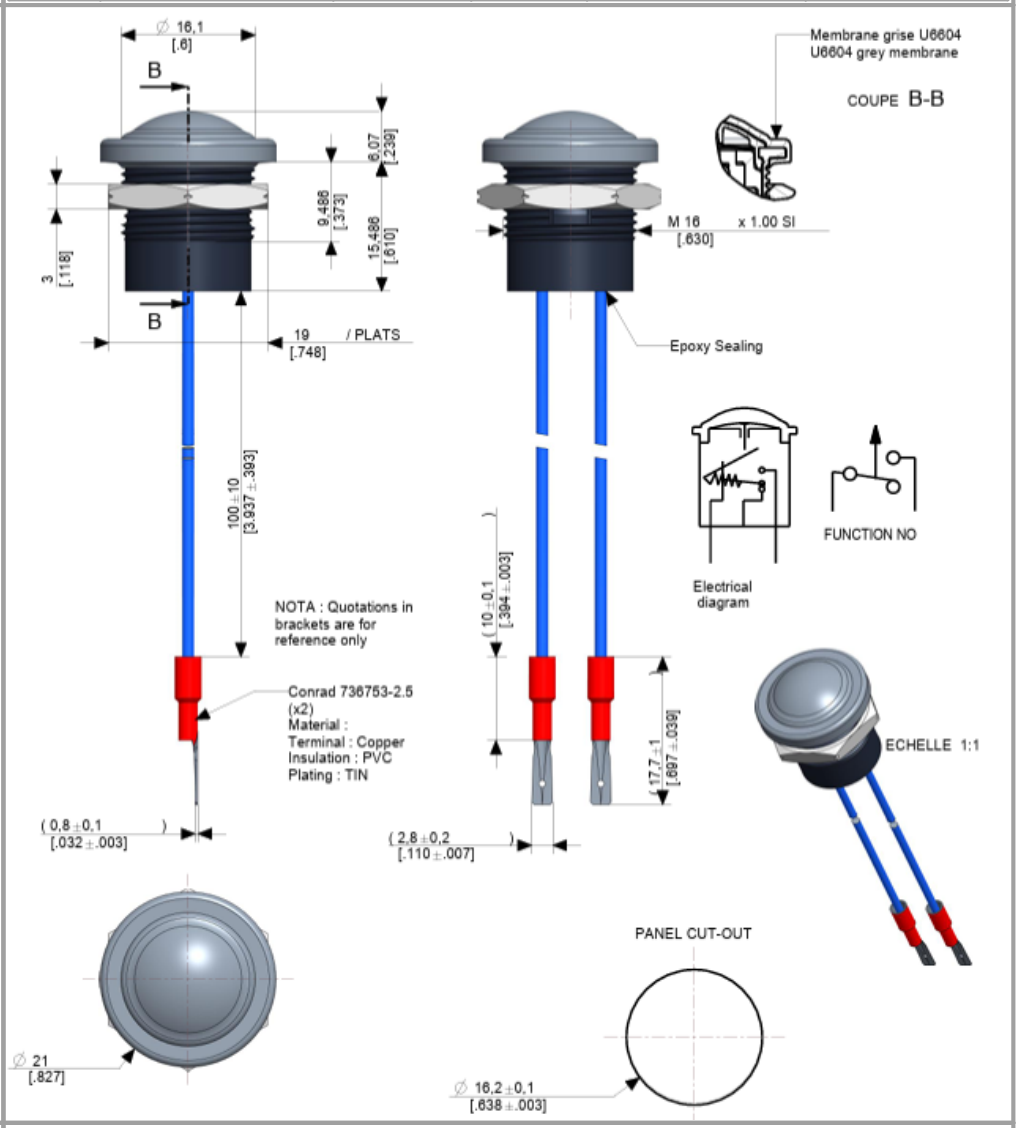					
Internal Electrical Schematic:	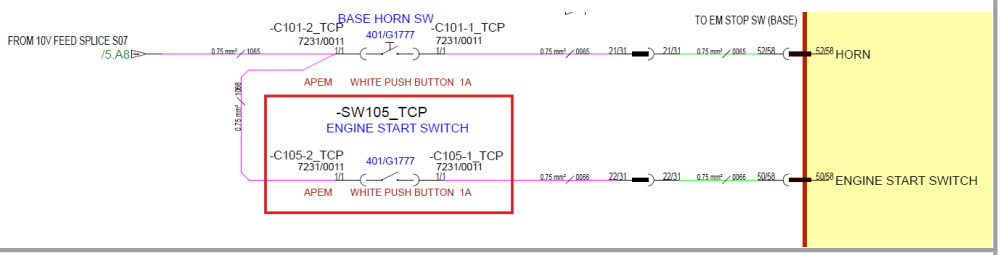					
Testing:	Important: Use the multi-meter on the harness connector pins. DO NOT USE the meter on the ECU pins.					

© 2026 JCB INDIA LTD

	Refer Test the Push Button Note-All the bush button fitted on machine are 10V ,normally open and closed when pressed. Diagnostic feedback on push button are coming from ECU. 1. Check supply at wiring harness terminal-1 with (respect to ground) on push button (when not pressed). It should read 10V. 2. Check the voltage at wiring harness terminal-2 on push button (When not pressed). It should read 2-3V. 3. Check the continuity between terminal 1 & 2 after pressing the push button. It should buzz. 4. If there is continuity and we are getting 10V supply then it may be internal damage to push button. 5. If issue still there replace the push button.
Expected Values:	12V

© 2026 JCB INDIA LTD

Related Fault Codes:	**Fault Code** / **Fault Description** B1050-17 596 — Engine start / stop turntable button - Circuit short to high (10v) B1051-16 597 — Engine start / stop turntable button - Circuit short to low B1052-24 598 — Engine start / stop turntable button - Signal stuck high

4.41.12 Base/Platform Enable Switch

Base/Platform Enable Switch

Components 134 > Turntable Control Panel 436 > Base/Platform Enable Switch

Component:	Base/Platform Enable Switch
Function:	Base / Platform Enable switch is for Indication that Machine is moving or coming, so that the place will be clear for safety.
Location:	Base / Platform Enable switch located at base, on the Turntable control panel.

© 2026 JCB INDIA LTD

Location Image:

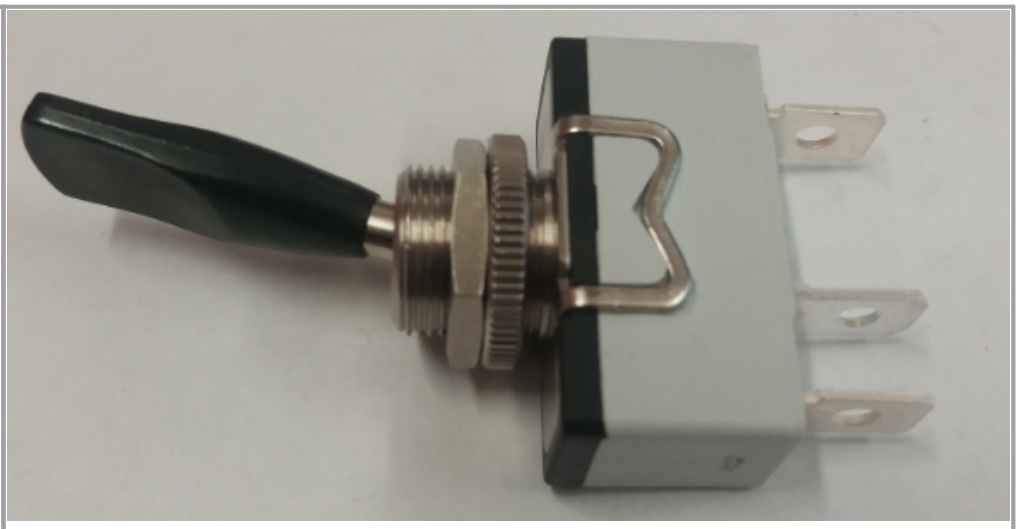

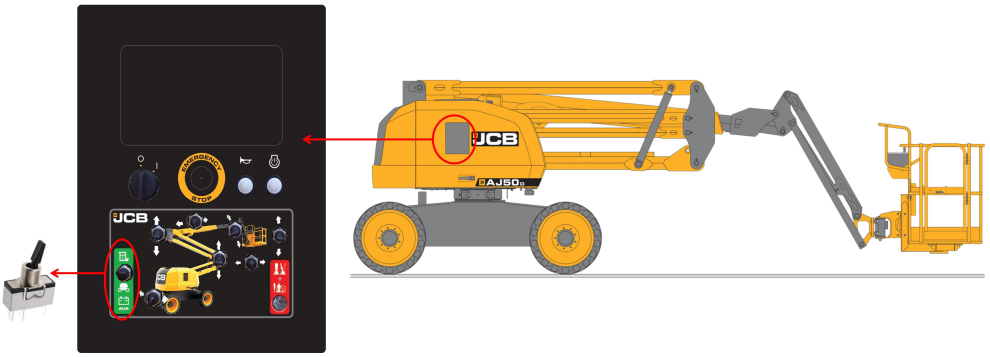

Signal:

Pin Number	Description/ Signal	Connector number	Wire number(s)	Voltage unpressed	Voltage pressed
1	Base Enable	C201-1_TCP	47		10V
2	Power in (10V)	C201-2_TCP	1046	10V	NA
3	Platform enable	C201-3_TCP	46		10V

© 2026 JCB INDIA LTD

Wires & Connectors :

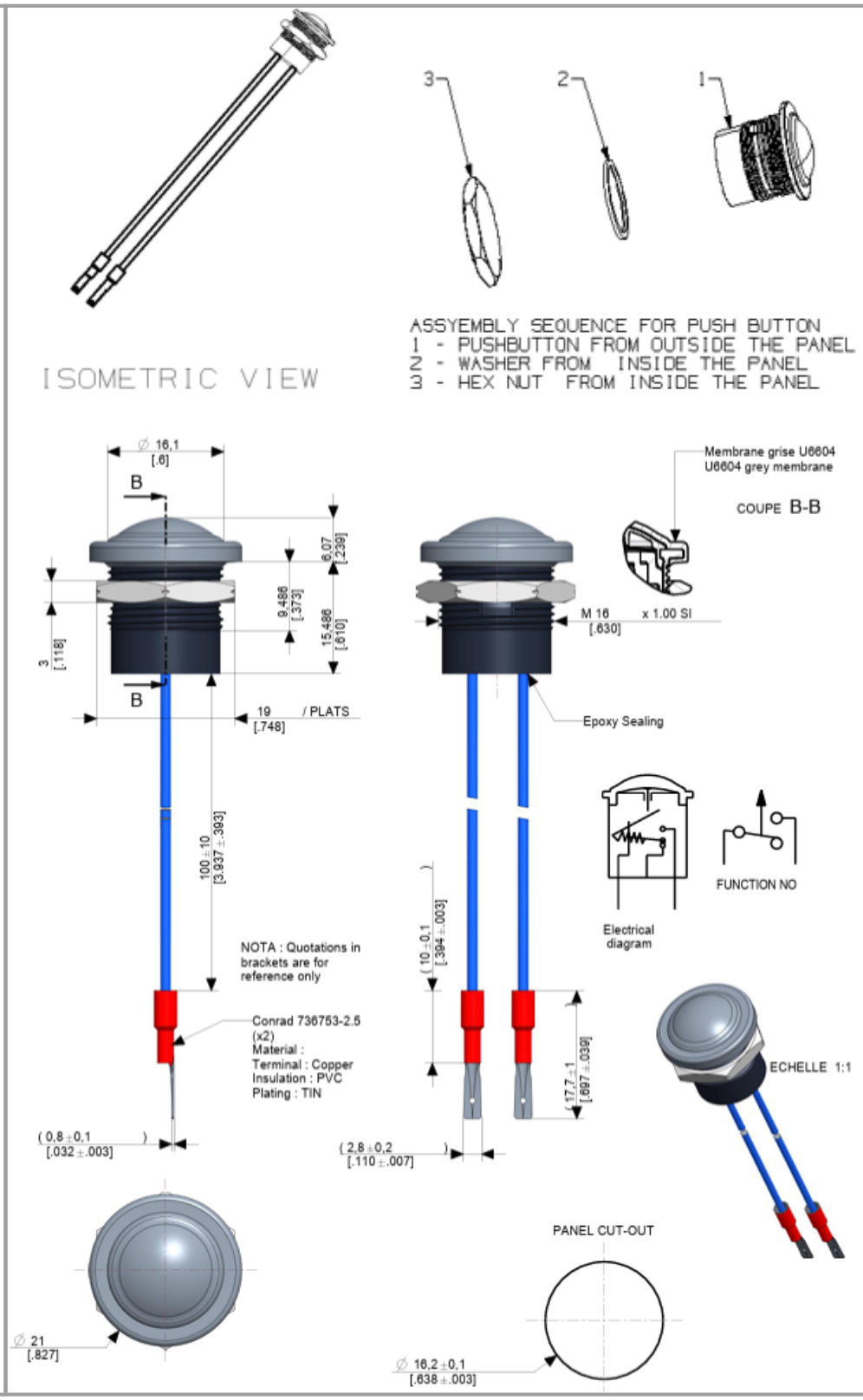

© 2026 JCB INDIA LTD

Internal **Electrical** **Schematic:**	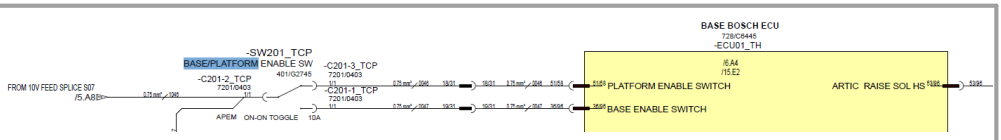
Testing:	Important: Use the multi-meter on the harness connector pins. DO NOT USE the meter on the ECU pins. Note- Override switch and the base/ platform enable are the same switch at the base control panel. There are NO in state 1. There are3 contact on the back of switch. 2. Check terminal 1,2 & 3 connected correctly with wiring harness terminal 1,2 & 3 respectively. 3. Terminal 2 is for incoming supply 4. Check continuity between terminal 2 & terminal 3 and terminal 2 & terminal 1. It should buzz for one combination and should not buzz for other. When switch is pressed, it should buzz vice verse. 5. Check supply at terminal 2. It should read 10V. 6. If there is no 10V then investigate wiring as per schematic.

© 2026 JCB INDIA LTD

	7. If there is 10V available and continuity is OK then it should be internal damage to switch. Replace it.
Expected Values:	12V
Related Fault Codes:	**Fault Code** / **Fault Description** B1005-24 545 — Base Enable Switch SC to High B1006-16 546 — Platform Enable Switch SC to High B1007-16 547 — Platform Enable Switch AND Base Enable Switch both activated (5 - 10V) B1008-16 549 — Base Enable SC to Low B1009-16 550 — Platform Enable SC to Low B1010-13 551 — Base Enable Switch OC AND Platform Enable Switch OC

4.41.13 Main Boom Raise/Lower Switch(TCP)



Components 134 > Turntable Control Panel 436 > Ignition_28_12

© 2026 JCB INDIA LTD

Component :	Main Boom Raise/Lower Switch(TCP)
Function:	Main boom lift switch is for to lift the main boom in up or down directions.
Location:	Main boom lift switch located at base, on the Turntable control panel.
Location Image:	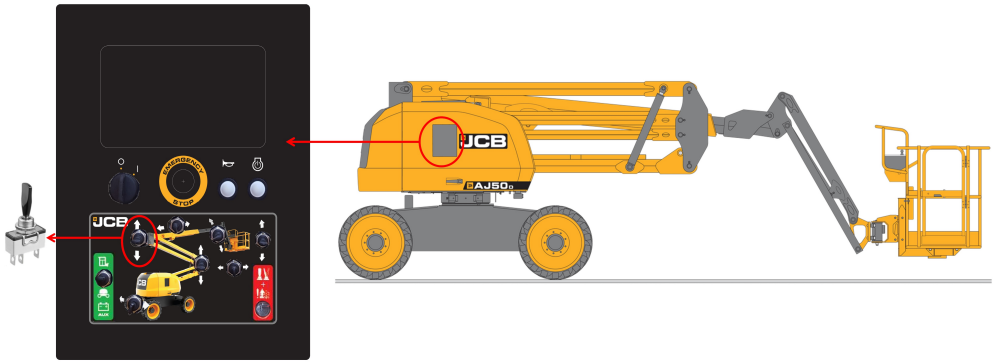

Signal:

Pin Number	Description/ Signal	Connector number	Wire number(s)	Voltage unpressed	Voltage pressed
1	Main boom Lower	C109-1_TCP	51	2.7V	10V
2	Power in (10V)	C109-2_TCP	1048	10V	NA
3	Main boom Raise	C109-3_TCP	50	3.4V	10V

© 2026 JCB INDIA LTD

Wires & Connectors :	
Internal Electrical Schematic:	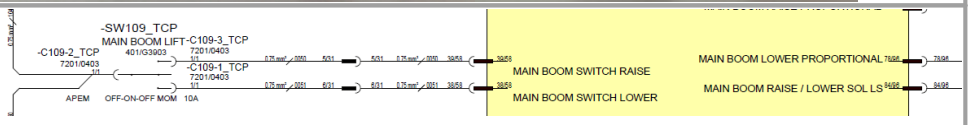
Testing:	Important: Use the multi-meter on the harness connector pins. DO NOT USE the meter on the ECU pins. Refer ' Test OFF-ON-OFF Momentary Toggle switch'

© 2026 JCB INDIA LTD

	1. There are 3 contact on the back of switch. 2. Check terminal 1, 2 & 3 connected correctly with wiring harness terminal 1,2 & 3 respectively. 3Terminal 2 is for incoming supply 4. Check continuity between terminal 2 & terminal 3 and terminal 2 & terminal 1. It should not buzz 5. When switch is pressed up. Terminal 2 should buzz with bottom terminal & when switch is pressed down. Terminal 2 should buzz with up terminal. 6. Check supply at terminal 2. It should read 10V. 7. If there is no 10V then investigate wiring as per schematic. 8. If there is 10V available and continuity is OK then it should be internal damage to switch. Replace it.
Expected Values:	12V

© 2026 JCB INDIA LTD

Related Fault Codes:	Fault Code	Fault Description
	B1116-17 667	Main boom turntable switch raise function - Circuit short to high (10v)
	B1117-17 669	Main boom turntable switch lower function - Circuit short to high (10v)
	B1118-92 670	Main boom turntable switch both functions - Signal plausibility failure (10v)
	B1119-16 671	Main boom turntable switch raise function - Circuit short to low
	B1120-16 673	Main boom turntable switch lower function - Circuit short to low

4.41.14 Articulated Boom Raise/Lower switch(TCP)

Articulated Boom Raise/Lower switch(TCP)

Components 134 > Turntable Control Panel 436 > Articulated Boom Raise/Lower switch(TCP)

Component:	Articulated Boom Raise/Lower switch(TCP)
Function:	Articulated boom switch is for to lift the articular boom in up or down directions.
Location:	Articulated boom switch located at base, on the Turntable control panel.

© 2026 JCB INDIA LTD

Location Image:

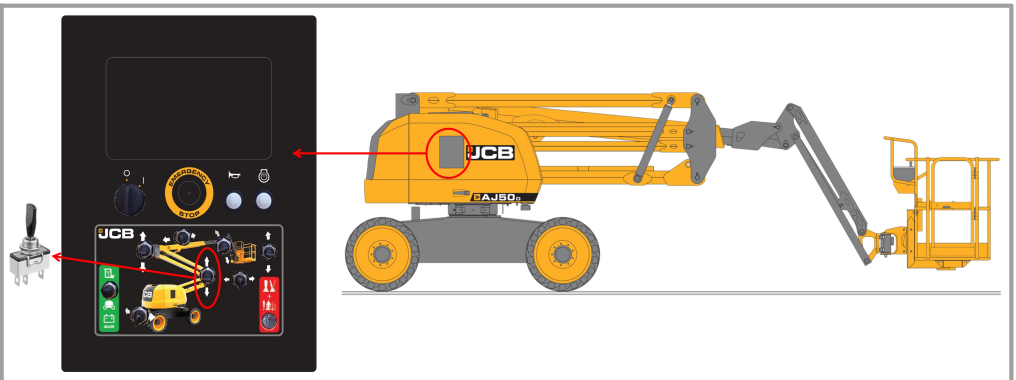

Signal:

Pin Number	Description/ Signal	Connector number	Wire number(s)	Voltage unpressed	Voltage pressed
1	Artic Lower	C115-1_TCP	55	2.7V	10V
2	Power in (10V)	C115-2_TCP	1052	10V	NA
3	Artic Raise	C115-3_TCP	54	3.4V	10V

Wires & Connectors :

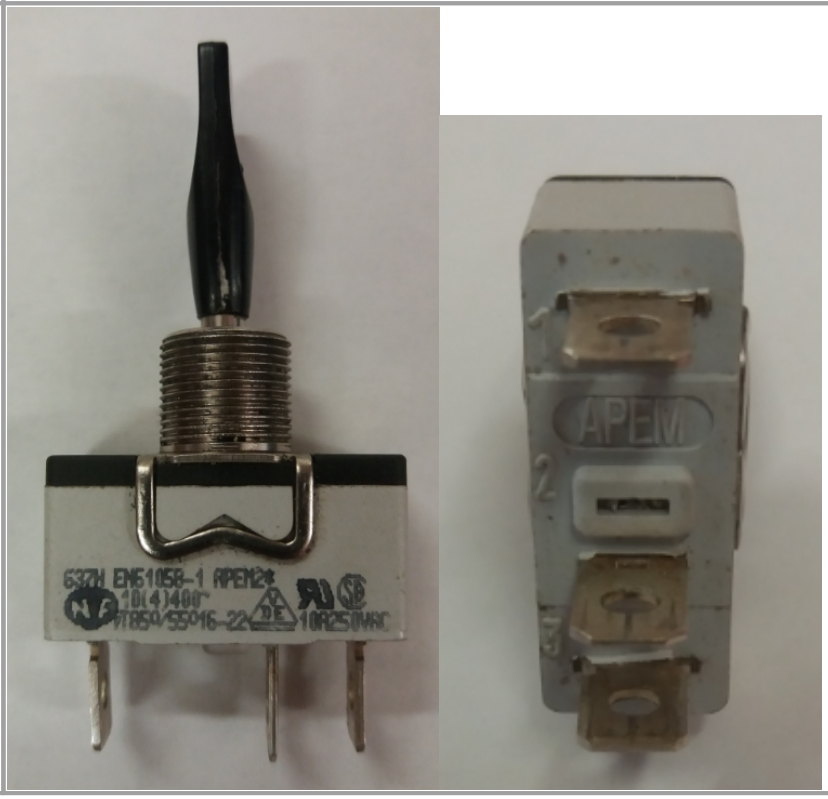

© 2026 JCB INDIA LTD

Internal **Electrical** **Schematic:**	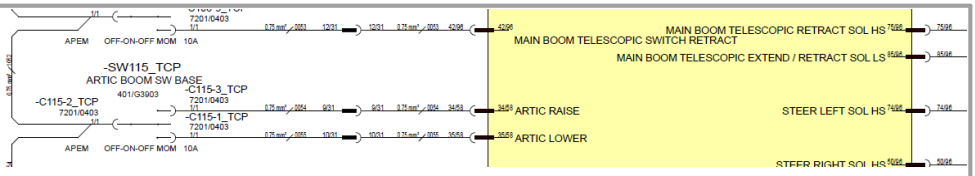
Testing:	Important: Use the multi-meter on the harness connector pins. DO NOT USE the meter on the ECU pins. Refer ' Test OFF-ON-OFF Momentary Toggle switch' 1. There are 3 contact on the back of switch. 2. Check terminal 1, 2 & 3 connected correctly with wiring harness terminal 1,2 & 3 respectively. 3. Terminal 2 is for incoming supply 4. Check continuity between terminal 2 & terminal 3 and terminal 2 & terminal 1. It should not buzz 5. When switch is pressed up. Terminal 2 should buzz with bottom terminal & when switch is pressed down. Terminal 2 should buzz with up terminal. 6. Check supply at terminal 2. It should read 10V. 7. If there is no 10V then investigate wiring as per schematic.

© 2026 JCB INDIA LTD

	8. If there is 10V available and continuity is OK then it should be internal damage to switch. Replace it.
Expected Values:	12V
Related Fault Codes:	

Fault Code	Fault Description
B1096-17 639	ARTICULATED BOOM RAISE Switch Short Circuit to High
B1097-17 640	ARTICULATED BOOM LOWER Switch Short Circuit to High
B1098-92 641	ARTICULATED BOOM RAISE & LOWER Switches both activated (5 - 10V)
B1099-16 643	ARTICULATED BOOM RAISE Switch Short Circuit to Low
B1100-16 644	ARTICULATED BOOM LOWER Switch Short Circuit to Low

4.41.15 Jib Raise/Lower Switch(TCP)

Jib Raise/Lower Switch(TCP)

Components 134 > Turntable Control Panel 436 > Jib Raise/Lower Switch(TCP)

Component :	Jib Raise/Lower Switch(TCP)

© 2026 JCB INDIA LTD

Function:	Jib switch is for to lift the Jib in up or down directions.
Location:	Jib switch located at base, on the Turntable control panel.
Location Image:	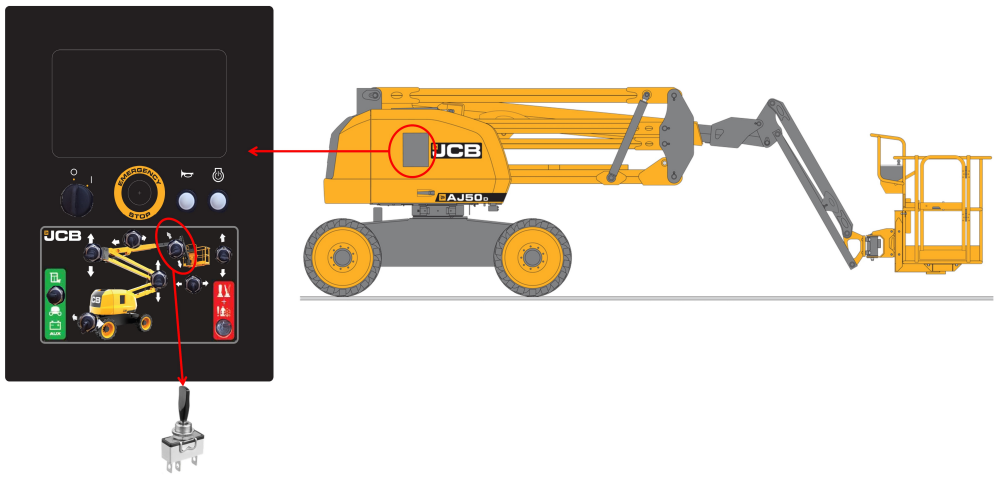

Signal:

Pin Number	Description/ Signal	Connector number	Wire number(s)	Voltage unpressed	Voltage pressed
1	Jib Lower	C113-1_TCP	59	2.7V	10V
2	Power in (10V)	C113-2_TCP	1056	10V	NA
3	Jib Raise	C113-3_TCP	58	2.7V	10V

© 2026 JCB INDIA LTD

Wires & Connectors :	
Internal Electrical Schematic:	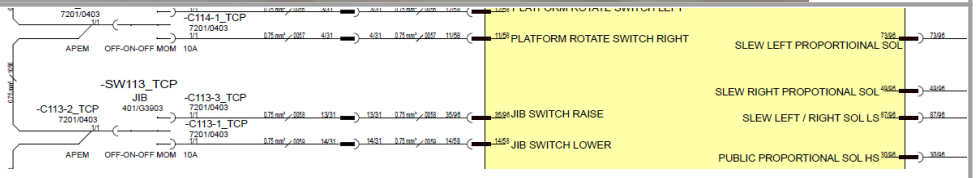
Testing:	Important: Use the multi-meter on the harness connector pins. DO NOT USE the meter on the ECU pins. 1. There are 3 contact on the back of switch.

© 2026 JCB INDIA LTD

	2. Check terminal 1, 2 & 3 connected correctly with wiring harness terminal 1,2 & 3 respectively. 3. Terminal 2 is for incoming supply 4. Check continuity between terminal 2 & terminal 3 and terminal 2 & terminal 1. It should not buzz 5. When switch is pressed up. Terminal 2 should buzz with bottom terminal & when switch is pressed down. Terminal 2 should buzz with up terminal. 6. Check supply at terminal 2. It should read 10V. 7. If there is no 10V then investigate wiring as per schematic. 8. If there is 10V available and continuity is OK then it should be internal damage to switch. Replace it.
Expected Values:	12V
Related Fault	

Fault Code	Description
B1111-17 660	Jib boom turntable switch raise function - Circuit short to high (10v)
B1112-17 661	Jib boom turntable switch lower function - Circuit short to high (10v)
B1113-92 662	Jib boom turntable switch both functions - Signal plausibility failure (10v)
B1114-16 664	Jib boom turntable switch raise function - Circuit short to low

© 2026 JCB INDIA LTD

Codes:	B1115-16 666	Jib boom turntable switch lower function - Circuit short to low

4.41.16 Main Boom Telescope Extend/Retract Switch(TCP)

Main Boom Telescope Extend/Retract Switch(TCP)

Components 134 > Turntable Control Panel 436 > Main Boom Telescope Extend/Retract Switch(TCP)

Component :	Main Boom Telescope Extend/Retract Switch(TCP)
Function:	Main boom telescope switch is for to lift the articular boom in up or down directions.
Location:	Main boom telescope switch located at base, on the Turntable control panel.
Location Image:	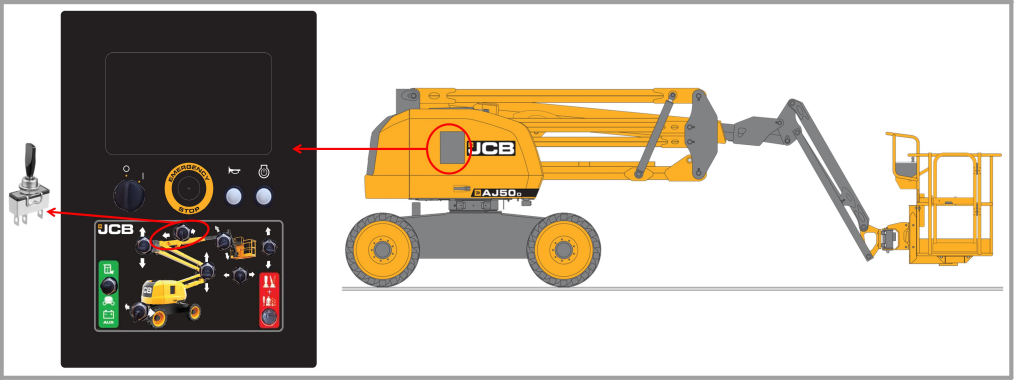

© 2026 JCB INDIA LTD

Signal:

Pin Number	Description/ Signal	Connector number	Wire number(s)	Voltage unpressed	Voltage pressed
1	Telescopic Extend	C108-1_TCP	52	2.7V	10V
2	Power in (10V)	C108-2_TCP	1050	10V	NA
3	Telescopic Retract	C108-3_TCP	53	2.7V	10V

Wires & Connectors :





© 2026 JCB INDIA LTD

Internal **Electrical** **Schematic:**	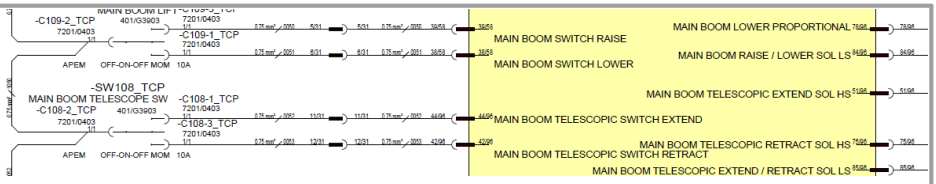
Testing:	Important: Use the multi-meter on the harness connector pins. DO NOT USE the meter on the ECU pins 1. There are 3 contact on the back of switch. 2. Check terminal 1, 2 & 3 connected correctly with wiring harness terminal 1,2 & 3 respectively. 3. Terminal 2 is for incoming supply 4. Check continuity between terminal 2 & terminal 3 and terminal 2 & terminal 1. It should not buzz 5. When switch is pressed up. Terminal 2 should buzz with bottom terminal & when switch is pressed down. Terminal 2 should buzz with up terminal. 6. Check supply at terminal 2. It should read 10V. 7. If there is no 10V then investigate wiring as per schematic.

© 2026 JCB INDIA LTD

	8. If there is 10V available and continuity is OK then it should be internal damage to switch. Replace it.
Expected Values:	12V
Related Fault Codes:	

Fault Code	Fault Description
B1101-17 645	MAIN BOOM EXTEND Switch Short Circuit to High
B1102-17 646	MAIN BOOM RETRACT Switch Short Circuit to High
B1103-92 647	MAIN BOOM EXTEND & RETRACT Switches both activated (5 - 10V)
B1104-16 649	MAIN BOOM EXTEND Switch Short Circuit to Low
B1105-16 651	MAIN BOOM RETRACT Switch Short Circuit to Low

4.41.17 Platform Rotate Left/Right Switch(TCP)

Platform Rotate Left/Right Switch(TCP)

Components 134 > Turntable Control Panel 436 > Platform Rotate Left/Right Switch(TCP)

Component :	Platform Rotate Left/Right Switch(TCP)

© 2026 JCB INDIA LTD

Function:	Platform rotate switch is for to rotate the Basket in left or right directions.
Location:	Platform rotate switch located at base, on the Turntable control panel.
Location Image:	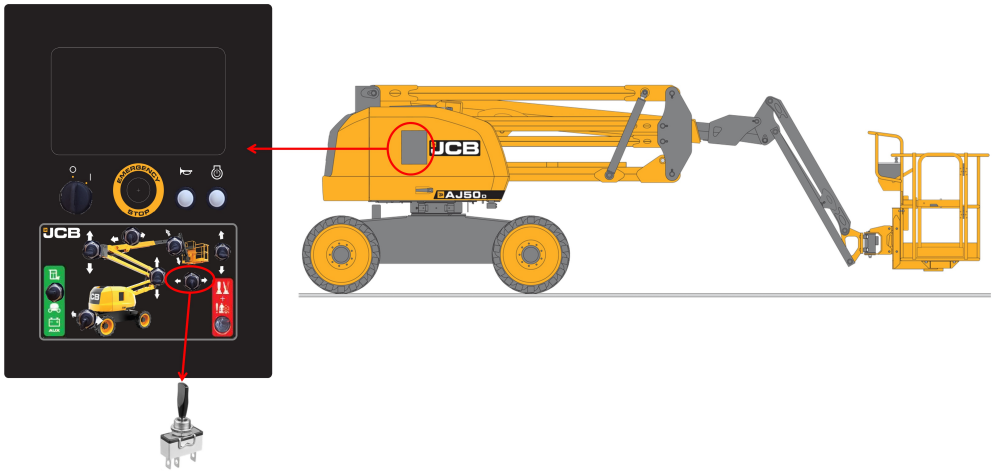

Signal:

Pin Number	Description/ Signal	Connector number	Wire number(s)	Voltage unpressed	Voltage pressed
1	Platform Rotate Right	C114-1_TCP	57	2.7V	10V
2	Power in (10V)	C114-2_TCP	1054	10V	NA
3	Platform Rotate Left	C114-3_TCP	56	3.4V	10V

© 2026 JCB INDIA LTD

Wires & Connectors :	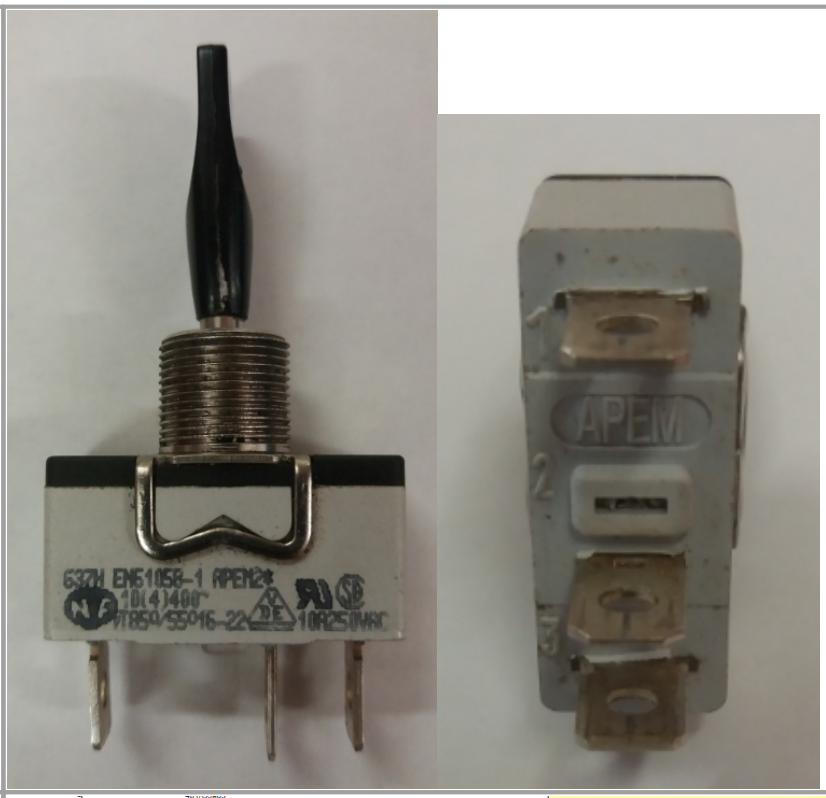
Internal Electrical Schematic:	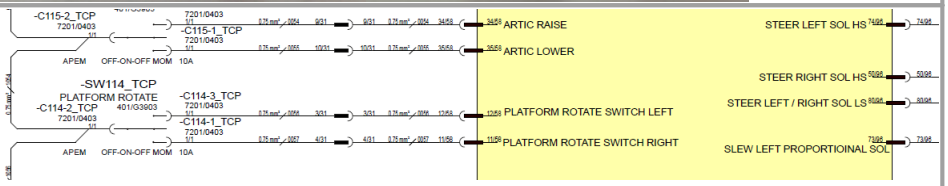
Testing:	Important: Use the multi-meter on the harness connector pins. DO NOT USE the meter on the ECU pins. Refer ' Test OFF-ON-OFF Momentary Toggle switch' 1. There are 3 contact on the back of switch.

© 2026 JCB INDIA LTD

	2. Check terminal 1, 2 & 3 connected correctly with wiring harness terminal 1,2 & 3 respectively. 3. Terminal 2 is for incoming supply 4. Check continuity between terminal 2 & terminal 3 and terminal 2 & terminal 1. It should not buzz 5. When switch is pressed up. Terminal 2 should buzz with bottom terminal & when switch is pressed down. Terminal 2 should buzz with up terminal. 6. Check supply at terminal 2. It should read 10V. 7. If there is no 10V then investigate wiring as per schematic. 8. If there is 10V available and continuity is OK then it should be internal damage to switch. Replace it.
Expected Values:	12V
Related Fault	

Fault Code	Fault Description
B1106-17 652	Platform rotate turntable switch right function - Circuit short to high (10v)
B1107-17 653	Platform rotate turntable switch left function - Circuit short to high (10v)
B1108-92 655	Platform rotate turntable switch both functions - Signal plausibility failure (10v)
B1109-16 656	Platform rotate turntable switch right function - Circuit short to low

© 2026 JCB INDIA LTD

Codes:	B1110-16 658	Platform rotate turntable switch left function - Circuit short to low

4.41.18 Platform Leveling Raise/Lower Switch(TCP)

Platform Leveling Raise/Lower Switch(TCP)

Components 134 > Turntable Control Panel 436 > Platform Leveling Raise/Lower Switch(TCP)

Component :	Platform Leveling Raise/Lower Switch(TCP)
Function:	Platform leveling switch is for to raise the Platform in up or down directions.
Location:	Platform leveling switch located at base, on the Turntable control panel.
Location Image:	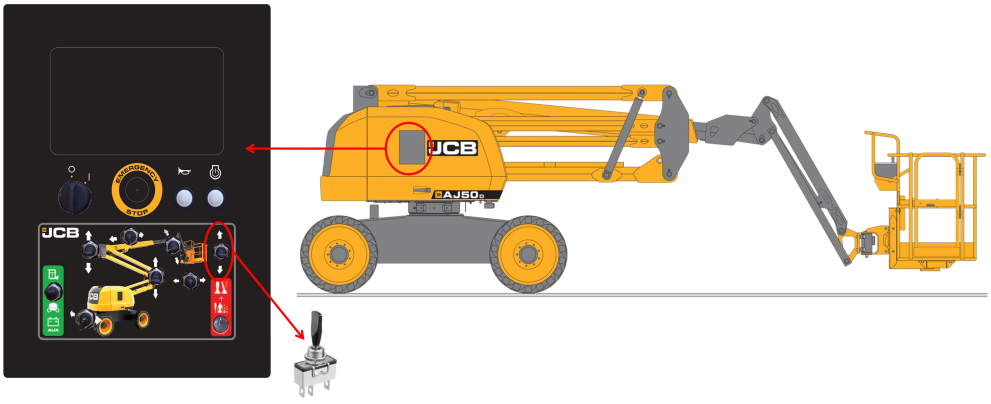

© 2026 JCB INDIA LTD

Signal:

Pin Number	Description/ Signal	Connector number	Wire number(s)	Voltage unpressed	Voltage pressed
1	Platform Leveling Lower	C112-1_TCP	61	2.7V	10V
2	Power in (10V)	C112-2_TCP	1058	10V	NA
3	Platform Leveling Raise	C112-3_TCP	60	2.7V	10V

Wires & Connectors :





© 2026 JCB INDIA LTD

Internal **Electrical** **Schematic:**	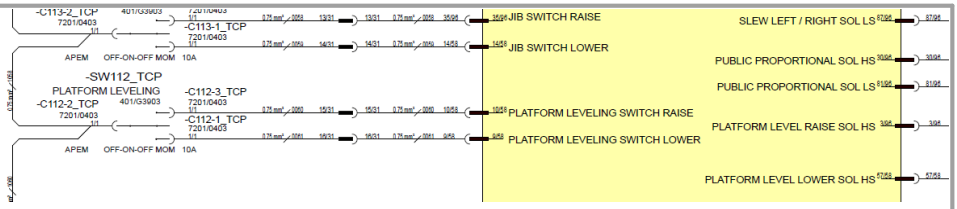
Testing:	Important: Use the multi-meter on the harness connector pins. DO NOT USE the meter on the ECU pins. 1. There are 3 contact on the back of switch. 2. Check terminal 1, 2 & 3 connected correctly with wiring harness terminal 1,2 & 3 respectively. 3. Terminal 2 is for incoming supply 4. Check continuity between terminal 2 & terminal 3 and terminal 2 & terminal 1. It should not buzz 5. When switch is pressed up. Terminal 2 should buzz with bottom terminal & when switch is pressed down. Terminal 2 should buzz with up terminal. 6. Check supply at terminal 2. It should read 10V. 7. If there is no 10V then investigate wiring as per schematic.

© 2026 JCB INDIA LTD

	8. If there is 10V available and continuity is OK then it should be internal damage to switch. Replace it.
Expected Values:	12V
Related Fault Codes:	

Fault Code	Fault Description
B1071-17 618	Platform level turntable switch raise function - Circuit short to high (10v)
B1072-17 619	Platform level turntable switch lower function - Circuit short to high (10v)
B1073-92 620	Platform level turntable switch both functions - Signal plausibility failure (10v)
B1074-16 621	Platform level turntable switch raise function - Circuit short to low
B1075-16 622	Platform level turntable switch lower function - Circuit short to low

4.41.19 Over Ride Switch

Over Ride Switch

Components 134 > Turntable Control Panel 436 > Over Ride Switch

Component:	Over Ride Switch

© 2026 JCB INDIA LTD

Function:	•The override switch is used for emergency purposes to allow someone to rescue incapacitated operated. •The switch needs to be held with the ignition cycle while switch is still pressed, on start up this will then allow one function at a time to be operated via the electric pump to bring the operator down. •As soon as the switch is released then override function will drop out. •If override is operated the machine will need to be checked over and the reset via service master tool. •This switch is an on - on switch. •Both contacts should always be on/off at opposite times otherwise the ecu will detect a fault
Location:	Override switch located at base, on the Turntable control panel.

© 2026 JCB INDIA LTD

Location

Image:

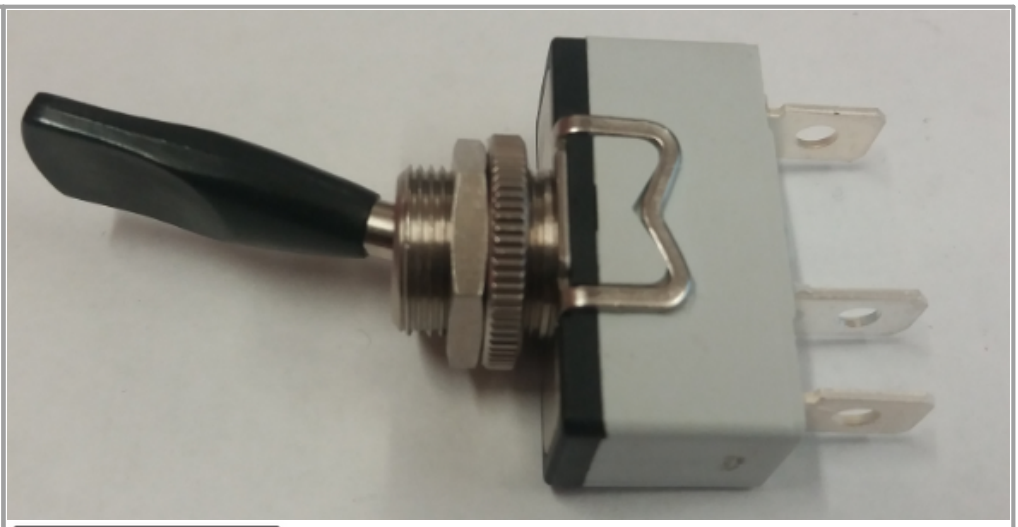

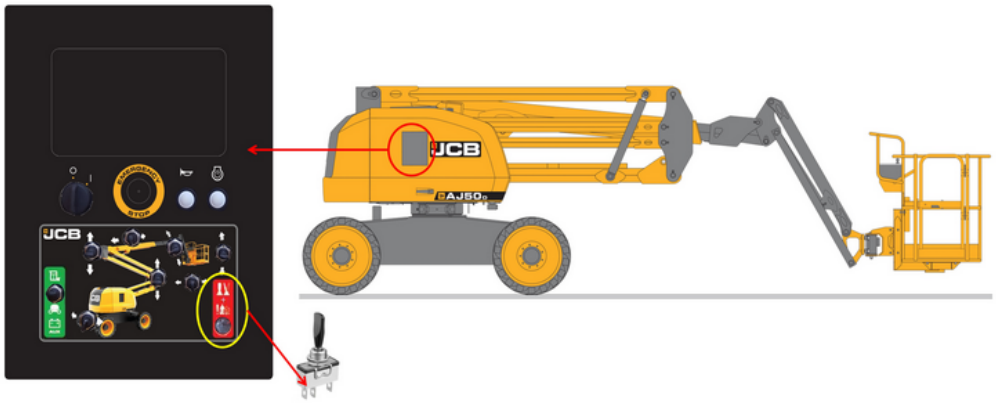

Signal:

Pin Number	Description/ Signal	Connector number	Wire number(s)	Voltage unpressed	Voltage pressed
1	Pressed Contact	C200-1_TCP	63	3.4V	10V
2	Power in (10V)	C200-2_TCP	3042	10V	NA
3	Unpressed Contact	C200-3_TCP	62		10V

© 2026 JCB INDIA LTD

Wires & Connectors :	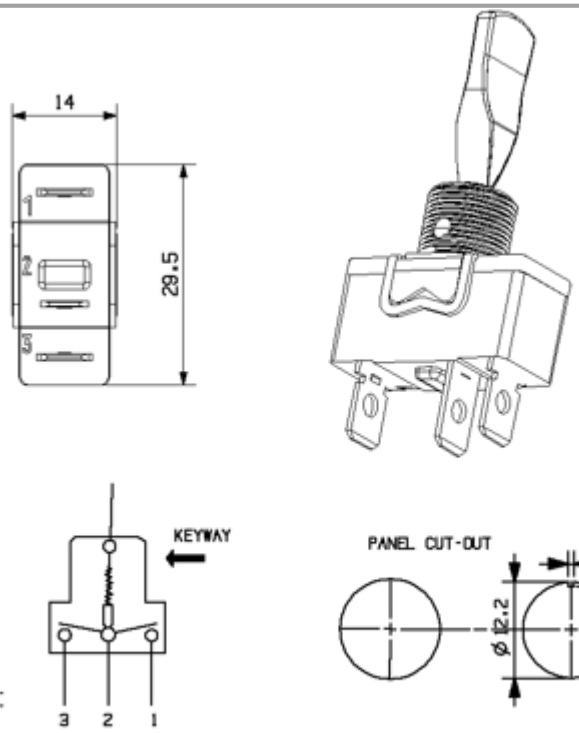
Internal Electrical Schematic:	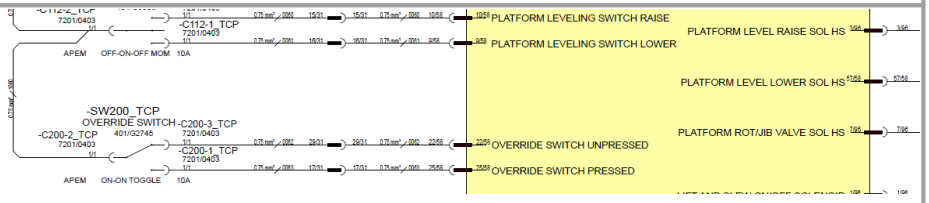
Testing:	Important: Use the multi-meter on the harness connector pins. DO NOT USE the meter on the ECU pins. Note- Override switch and the base/ platform enable are the same switch at the base control panel. There are NO in state 1. There are 3 contact on the back of switch.

© 2026 JCB INDIA LTD

	2. Check terminal 1, 2 & 3 connected correctly with wiring harness terminal 1,2 & 3 respectively. 3. Terminal 2 is for incoming supply 4. Check continuity between terminal 2 & terminal 3 and terminal 2 & terminal 1. It should not buzz 5. When switch is pressed up. Terminal 2 should buzz with bottom terminal & when switch is pressed down. Terminal 2 should buzz with up terminal. 6. Check supply at terminal 2. It should read 10V. 7. If there is no 10V then investigate wiring as per schematic. 8. If there is 10V available and continuity is OK then it should be internal damage to switch. Replace it.
Expected Values:	12V
Related Fault	

Fault Code	Fault Description
B1058-17 604	Override switch pressed short circuit to high
B1059-16 605	Override switch pressed state - Circuit short to low
B1060-13 606	Override switch - Signal plausibility failure (Circuit open)
B1061-17 607	Override switch unpressed short circuit to high

© 2026 JCB INDIA LTD

Codes:		
	B1062-16 608	Override switch unpressed state - Circuit short to low
	B1063-92 609	Override switch - Signal plausibility failure (12v)

4.41.20 Buzzer(TCP)

Buzzer(TCP)

Components 134 > Turntable Control Panel 436 > Buzzer(TCP)

Component:	Buzzer(TCP)
Function:	•The buzzer is there to warn the operator when either an fault or error has happened with the machine or to warn of machine is awaiting for operator action. •For example, if the foot pedal is pressed for longer than 10 seconds without a function being pressed,this will time out and make the buzzer sound. •The platform buzzer and the base buzzer should be a repeat of each other. •If 1 buzzer is working and the other is not then there is issue with the buzzer.

© 2026 JCB INDIA LTD

Location:	Inside the Base Control Box
Location Image:	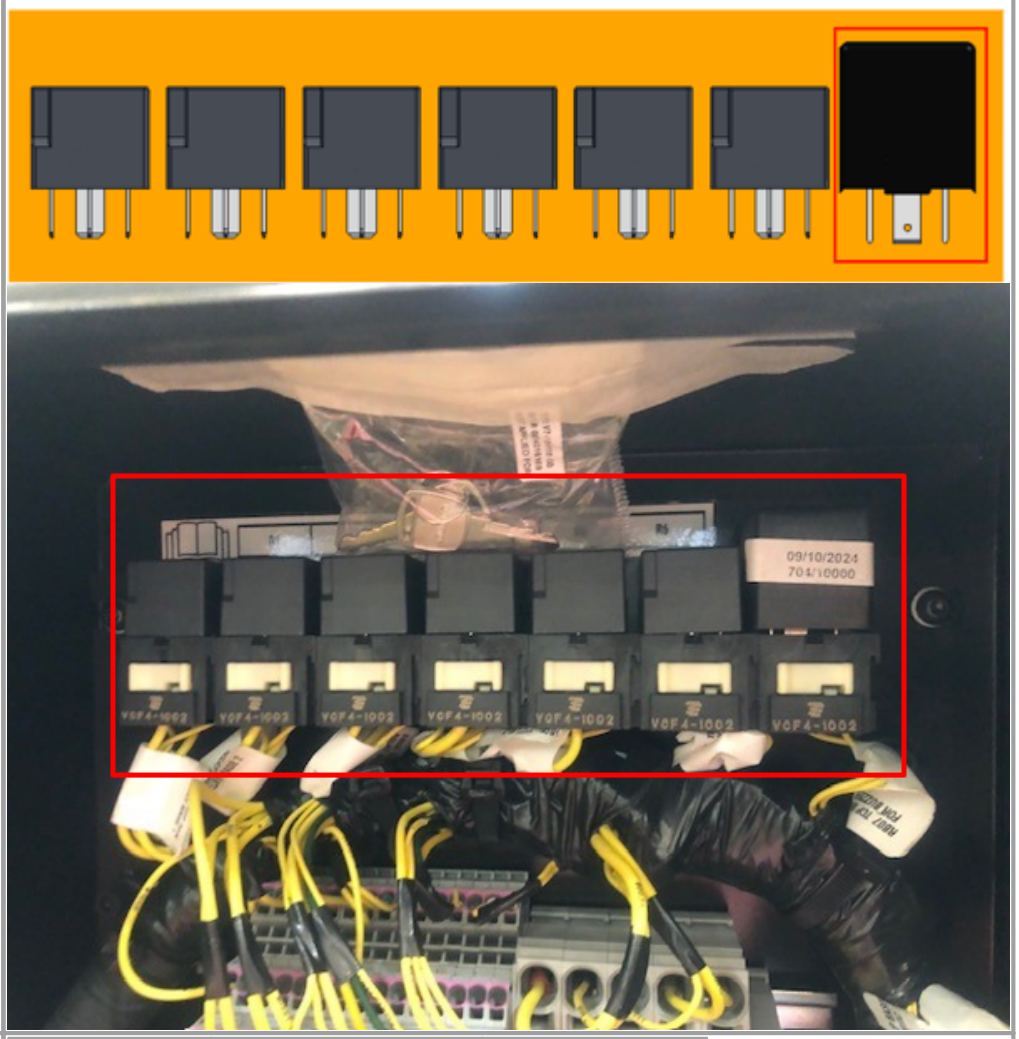
Signal:	

Pin Number	Description	Wire Number
1	Buzzer HS	4024
2	Buzzer HS	-
3	-	-
4	GND	6024

© 2026 JCB INDIA LTD

	5	-	-

Wires & Connectors :

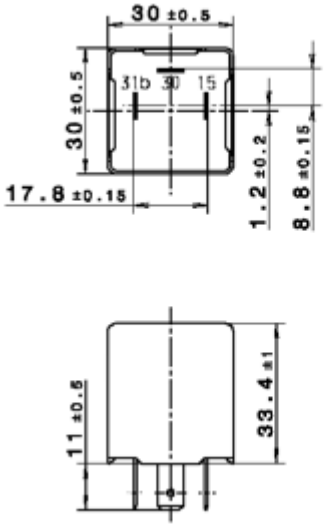

Internal Electrical Schematic:

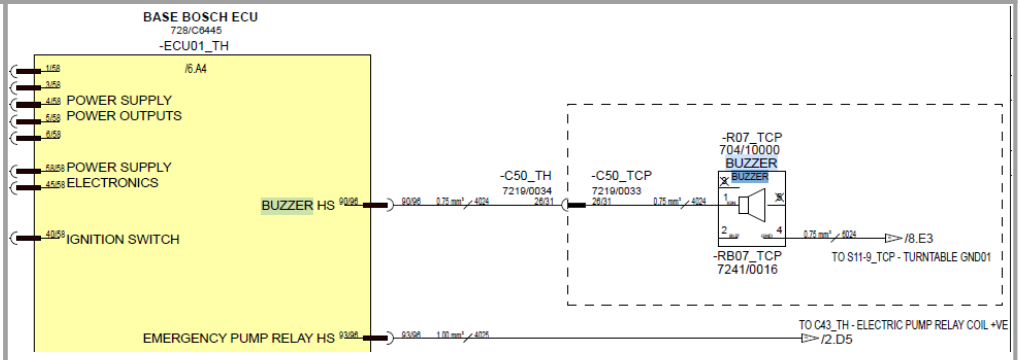

Testing:

Important: Use the multi-meter on the harness connector pins. DO NOT USE the meter on the ECU pins.

1. There are two buzzer fitted on machine one is inside base control panel and another is inside platform control panel. Ensure no water ingress

2. Check supply at connector RB07_TCP pin no 1 & 4 This should read 12V

3. If there is no supply check wiring as per the schematic

© 2026 JCB INDIA LTD

	4. If there is supply on harness there may be internal damage to buzzer 5. If harness continuity is OK replace the Buzzer Note-Remove the buzzer from its holder and wire to 12V and GND signals and the buzzer should sound.
Expected Values:	12V
Related Fault Codes:	**Fault Code** / **Fault Description** B1177-16 723 — Buzzer turntable - Circuit short to low B1178-13 725 — Buzzer turntable - Circuit open or short to high (12v)

4.41.21 Display 7''



Components 134 > Turntable Control Panel 436 > Display 7"

© 2026 JCB INDIA LTD

Component :	Display 7"
Function:	The display is there to the operator information and also assist with machine maintenance.
Location:	The display is located in the turntable control panel.
Location Image:	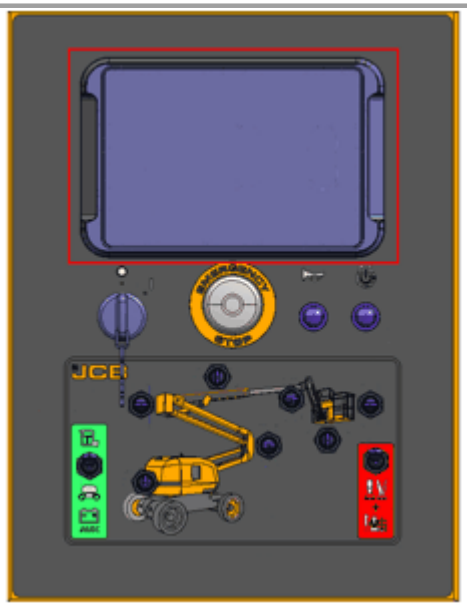
Signal:	

Connector J1		
Pin Number	**Signal**	**Wire number in harness**
1		
2	Ignition wire	1011
3		
4		
5		

© 2026 JCB INDIA LTD

	6		
	7	CAN L	Green CAN cable
	8	CAN H	Yellow CAN cable
	9	GND	6011

Connector J2 - not used

Wires & Connectors:

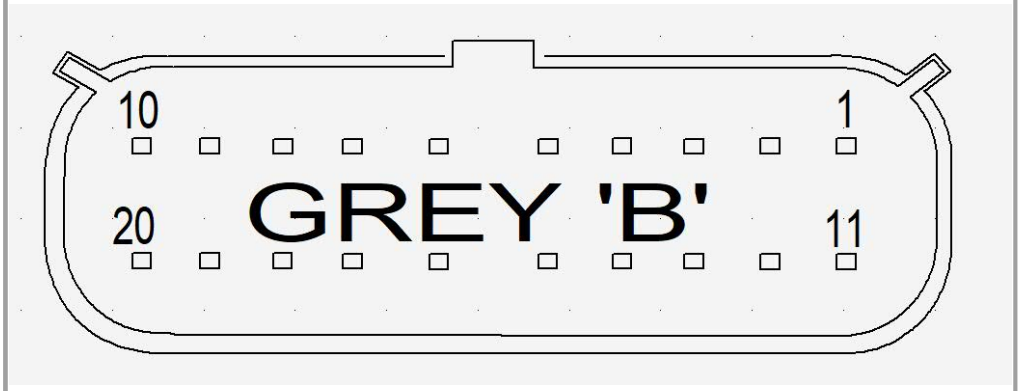

Connector J2 - not used

J1 - 332/E3213

Internal Electrical Schematic:

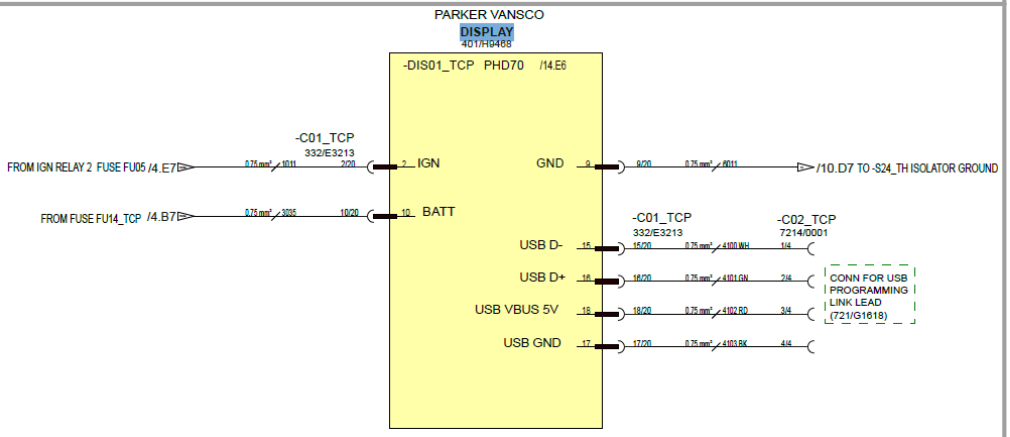

© 2026 JCB INDIA LTD

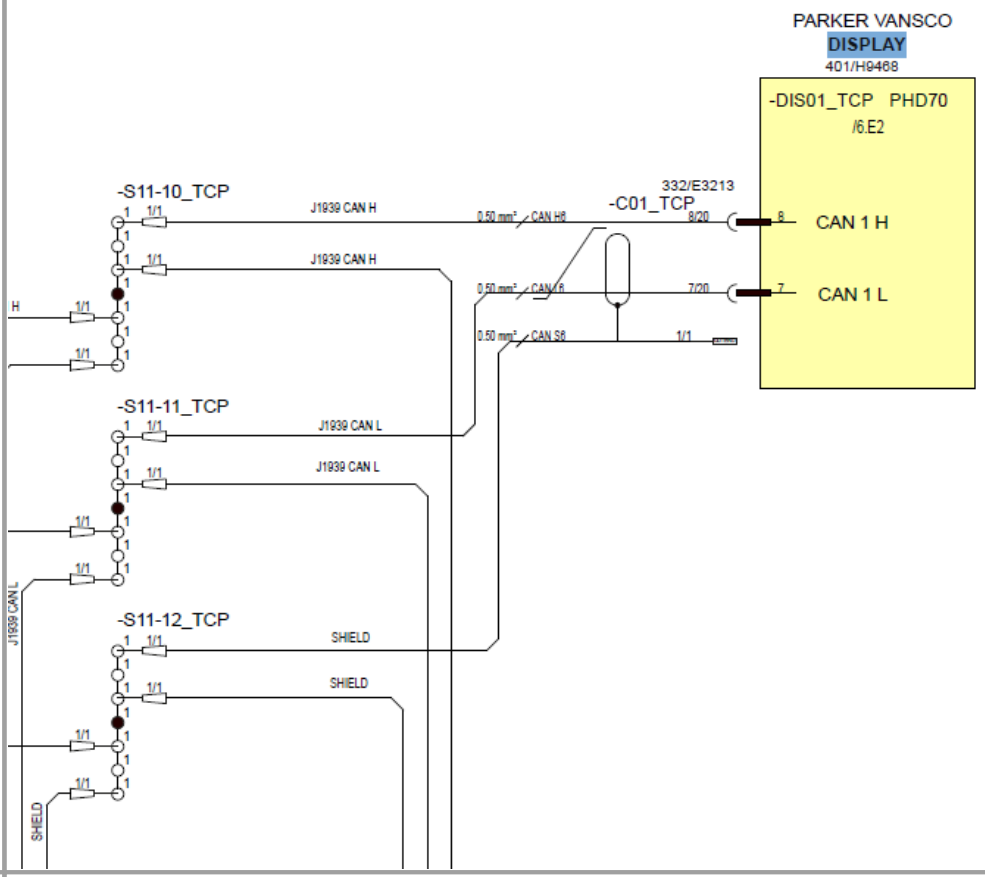

Testing:	1. Check IGN RELAY 2 FUSE FU05 and wire 1011. 2. Check FUSE FU14 and wire 3035. 3. Check Ground cable 6011. 4. Check connector and wire for any damage or loose connection.
Expected Values:	• The should be 12V on pin 10 at all times, • There should be 12V at pin 2 when the key is in the on position • There should be GND at pin 9 regardless of isolator position. • All data will be provided via CAN.

© 2026 JCB INDIA LTD

Related Fault Codes:	N/A

4.41.22 TCP Interface Connector



Components 134 > Turntable Control Panel 436 > TCP Interface Connector

Component:	TCP Interface Connector
Function:	There is 2 connectors that interface with the machine. Feed the Turntable harness around the base Control panel C39_TH and C50_TH.
Location:	On Base Control Box RHS

© 2026 JCB INDIA LTD

Location

Image:

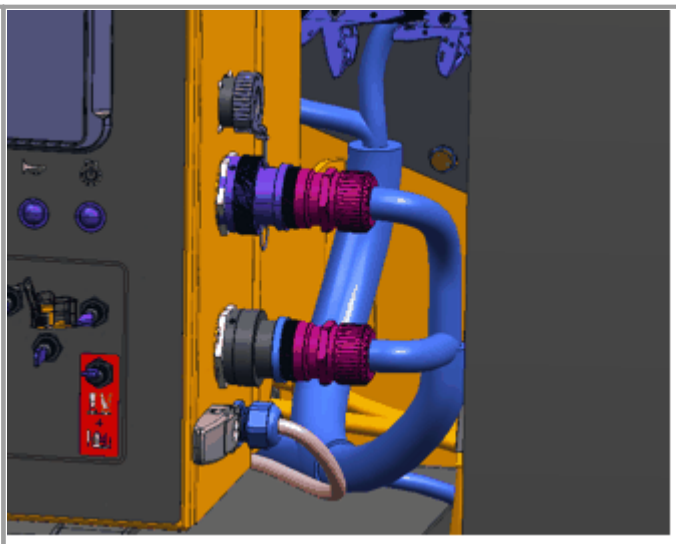

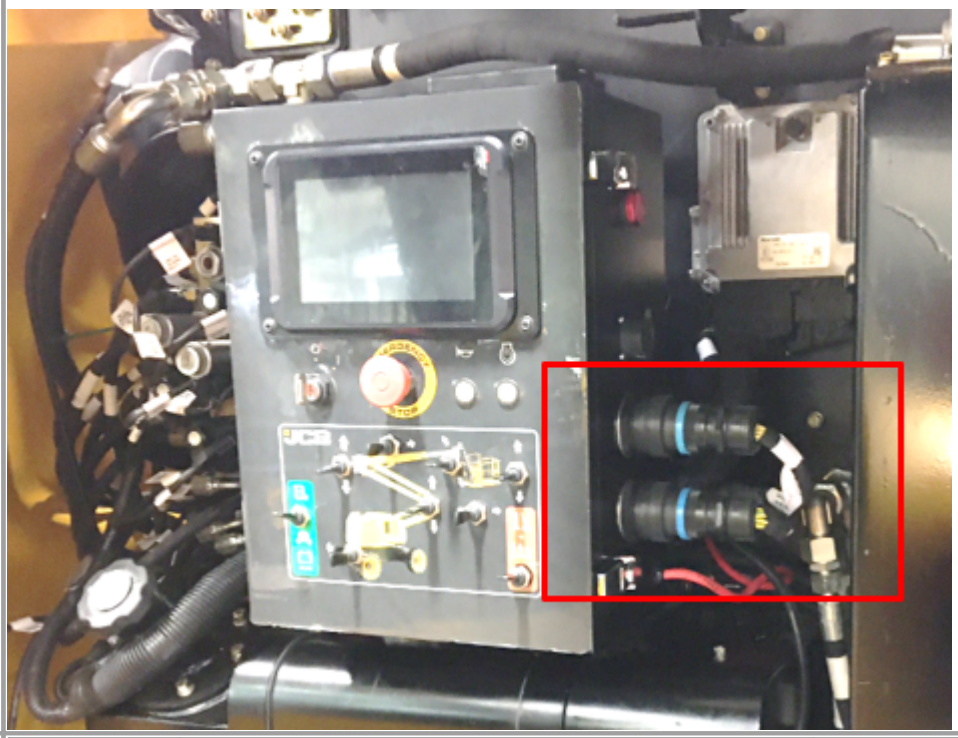

Signal:

C39 pin out		
Pin Number	**Description**	**Wire number**
1	FU03_TCP to Bosch ECU power supply	1018
2	FU09_TCP to pod box power hold relay	34

© 2026 JCB INDIA LTD

3	NOT USED	NOT USED
4	FU10_TCP to pod box starter relay	35
5	NOT USED	NOT USED
6	Alternator D+ to D+ relay	4005C
7	FY15_TCP to pod box power hold coil	3002
8	NOT USED	NOT USED
9	NOT USED	NOT USED
10	FU13_TCP to Livelink	3004
11	S11-3 Din rail terminal to Axle lock pressure sensor	1024A
12	FU06_TCP to platform ecu power supply	1025
13	CAN H J1939 to Livelink and platform	-
14	CAN L J1939 to Livelink and platform	-
15	CAN H J1939 to kohler engine	-
16	CAN L J1939 to kohler engine	-
17	FU11_TCP to work lights	1031
18	S11-18_TCP Terminal block to turntable earth	6063U
19	D+ signal to Livelink and Bosch base ECU	1032
20	CAN Shield J1939 to kohler engine	-

© 2026 JCB INDIA LTD

21	S11-11 terminal block to turntable ground	6061H
22	Display GND	6011
23	FU07_TCP to platform ecu supply	1026
24	S11-1_TCP to platform weight sensors	1027
25	CAN Shield to Livelink and platform	-
26	CAN H 15765 to kohler engine	-
27	CAN L 15765 to Kohler engine	-
28	S11-1_TCP to Tilt sensor	1028K
29	FU08_TCP to Bosch base ecu	1029A
C50 Pin out		
Pin Number	**Description**	**Wire number**
1	NOT USED	NOT USED
2	NOT USED	NOT USED
3	Platform rotate left switch to base ecu	56
4	Platform rotate right switch to base ecu	57
5	main boom raise switch to base ecu	50
6	main boom lower switch to base ecu	51

© 2026 JCB INDIA LTD

7	Slew right switch to base ecu	48
8	Slew left switch to base ecu	49
9	Artic boom raise switch to base ecu	54
10	Artic boom lower switch to base ecu	55
11	main boom telescope extend switch to base ecu	52
12	main boom telescope retract switch to base ecu	53
13	Jib Raise switch to base ecu	58
14	Jib Lower switch to base ecu	59
15	platform level raise switch to base ecu	60
16	platform level lower switch to base ecu	61
17	override ride switch pressed signal to base ecu	63
18	platform enable switch to base ecu	46
19	base enable switch to base ecu	47
20	NOT USED	NOT USED
21	horn switch to base ecu	65
22	engine start switch to base ecu	66
23	FU01_TCP ignition signal to base ecu	40
24	E-Stop +ve signal to base ecu	41

© 2026 JCB INDIA LTD

	25	E-Stop -ve to base ecu	42
	26	ECU Buzzer output to buzzer	4024
	27	base ecu horn output to horn relay	4035
	28	Horn relay output to horn	43
	29	Override unpressed switch to base ecu	62
	30	base ecu 10V feed to panel switches	1030A
	31	base ecu 10V feed to panel switches	1030B
Wires & Connectors :	**Turntable Interconnect C39** **Turntable Interconnect C50** Connector C39_TCP: Connector C50_TCP: 31 way Deutsch Inline connector HDP24-24-31PE Connector C50_TCP Pin out information:		

© 2026 JCB INDIA LTD

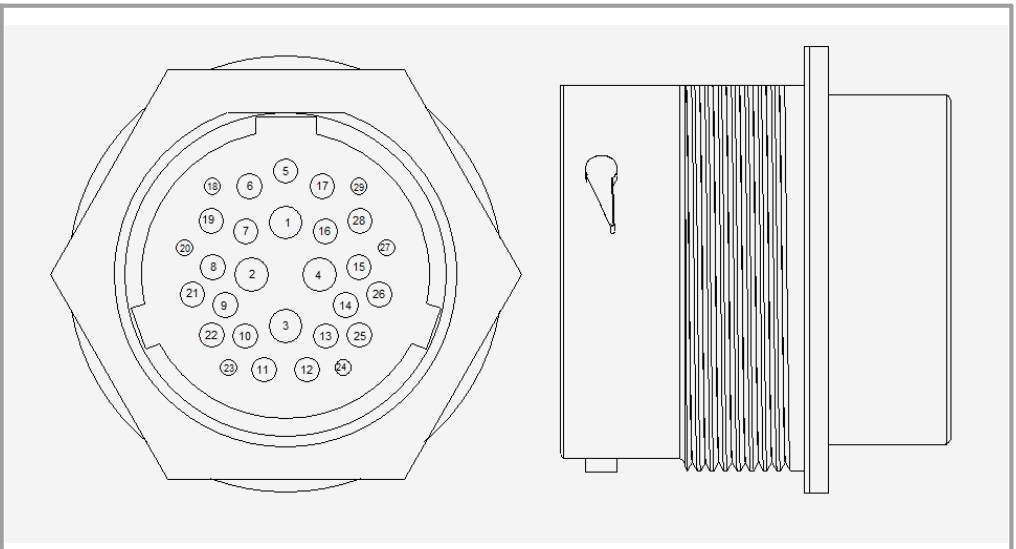

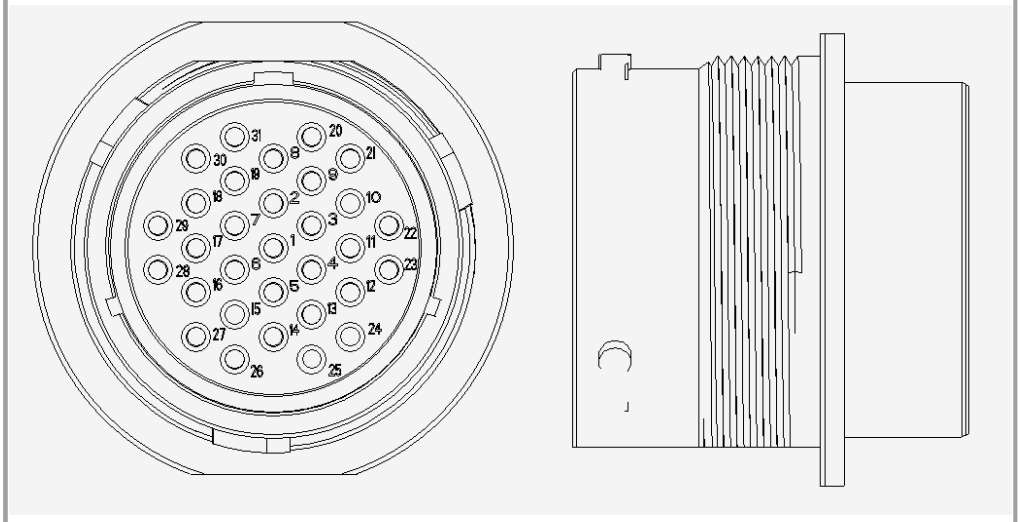

© 2026 JCB INDIA LTD

	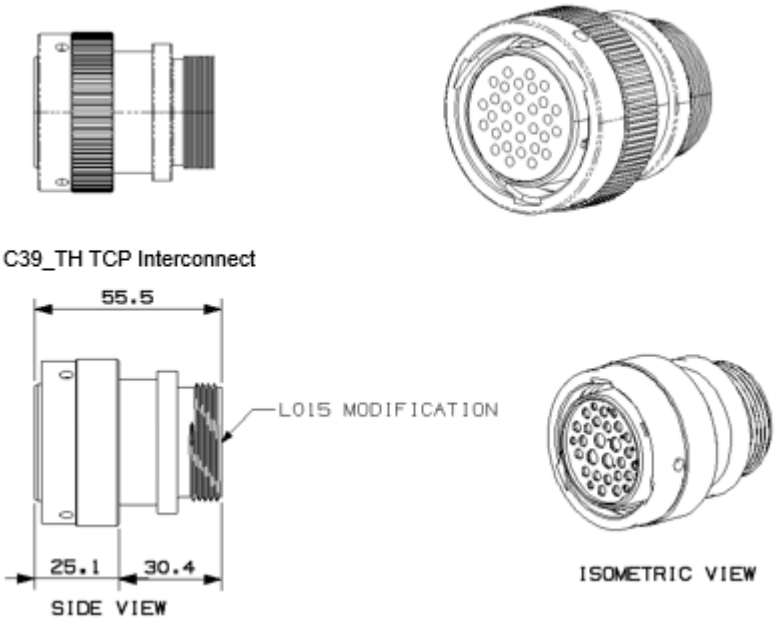
Internal **Electrical** **Schematic:**	Important: Use the multi-meter on the harness connector pins. DO NOT USE the meter on the ECU pins. 1. Check all the wire and connecter are fitted correctly. No wire should be backed out 2.Check male & female connector are mating properly.
Testing:	Important: Use the multi-meter on the harness connector pins. DO NOT USE the meter on the ECU pins. 1. Check all the wire and connecter are fitted correctly. No wire should be backed out 2.Check male & female connector are mating properly.

© 2026 JCB INDIA LTD

Expected Values:	See Signal
Related Fault Codes:	N/A

© 2026 JCB INDIA LTD

Machine Fault Codes

5 Machine Fault Codes

Machine Fault Codes

List of Machine Fault Codes 532

Sr Number	Component
1	DTC Error Code 532
2	General Sensor Fault Table 955
3	Fault Code Types 957

5.1 DTC ERROR CODE

DTC Error Code

Machine Fault Codes 532 > DTC ERROR CODE

DTC Error Codes

NOTE - Please Refer Engine Helpfile for Engine 'P' & 'U' Error Codes

List Of DTC ERROR CODE

Diagnostic Code (DC)	Fault Description
B1001 - 17 544	E-stop turntable button - Signal plausibility failure
B1005 - 24 545	Controls enable switch turntable enable function - Circuit short to high (10v)
B1006 - 16 546	Controls enable switch platform enable function - Circuit short to high (10v)
B1007 - 16 547	Controls enable switch both functions - Signal plausibility failure (10v)
B1008 - 16 549	Controls enable switch turntable enable function - Circuit short to low

© 2026 JCB INDIA LTD

B1009 - 16 550	Controls enable switch both functions - Signal plausibility failure (Circuit open)
B1010 - 13 551	Controls enable switch both functions - Signal plausibility failure (Circuit open)
B1011 - 17 553	Artic boom position switch 1 - Circuit short to high (12v)
B1012 - 17 554	Artic boom position switch 2 - Circuit short to high (12v)
B1013 - 16 555	Artic boom position switch 1 - Circuit short to low
B1014 - 13 556	Artic boom position switch - Signal plausibility failure (Circuit open)
B1015 - 16 557	Artic boom position switch 2 - Circuit short to low
B1016 - 92 558	Artic Boom Lower Limit Switch 1 AND Switch 2 short to 10V
B1017 - 17 559	TILT Sensor SC to High (not possible to detect until sensor connected to 10V)
B1018 - 16 560	Tilt Sensor short circuit to low
B1019 - 17 562	Slew position switch 1 - Circuit short to high (12v)
B1020 - 17 563	Slew position switch 2 - Circuit short to high (12v)
B1021 - 16 564	Slew position switch 1 - Circuit short to low
B1022 - 13 566	Slew position switch - Signal plausibility failure (Circuit open)
B1023 - 16 567	Slew position switch 2 - Circuit short to low
B1024 - 92 568	Slew position switch - Signal plausibility failure (12v)
B1025 - 13 569	Crush protection position switch - Signal plausibility failure
B1026 - 17 570	Crush protection position switch 1 - Circuit short to high (5v)
B1027 - 16 571	Crush protection position switch 1 - Circuit short to low
B1028 - 16 572	Crush protection position switch 2 - Circuit short to low
B1029 - 17 573	Crush protection position switch 2 - Circuit short to high (10v)
B1030 - 17 574	FORWARD OR REVERSE Proportional Solenoid Valve High Side Short Circuit to High
B1031 - 16 575	FORWARD OR REVERSE Proportional Solenoid Valve High Side Short Circuit to Low
B1032 - 13 576	FORWARD OR REVERSE Proportional Solenoid Valve High Side Open Circuit
B1033 - 17 577	FORWARD OR REVERSE Proportional Solenoid Valve Low Side Short Circuit to High
B1034 - 16 578	FORWARD OR REVERSE Proportional Solenoid Valve Low Side Short Circuit to Low
B1035 - 13 579	FORWARD OR REVERSE Proportional Solenoid Valve Low Side Open Circuit
B1036 - 17 581	Public proportional output solenoid short circuit to high (>10.5V)

© 2026 JCB INDIA LTD

B1037 - 16 582	Public proportional output solenoid short circuit to low.
B1038 - 13 583	PUBLIC Proportional Solenoid Valve High Side & Low Side Open Circuit
B1039 - 17 584	PLATFORM LEVELING DIRECTIONAL Solenoid Valve Raise High Side Short Circuit to High OR Open Circuit
B1040 - 16 585	PLATFORM LEVELING DIRECTIONAL Solenoid Valve Raise High Side Short Circuit to Low
B1041 - 17 586	PLATFORM LEVELING DIRECTIONAL Solenoid Valve Lower High Side Short Circuit to High OR Open Circuit
B1042 - 16 587	PLATFORM LEVELING DIRECTIONAL Solenoid Valve Lower High Side Short Circuit to Low
B1043 - 17 588	Oscillating axle solenoid high side - Circuit short to high (12v)
B1044 - 16 589	Oscillating axle solenoid high side - Circuit short to low
B1045 - 13 590	Oscillating axle solenoid high - Circuit open
B1046 - 17 591	HIGH TORQUE/LOW SPEED Solenoid Valve Short Circuit to High or Open Circuit
B1047 - 16 592	HIGH TORQUE/LOW SPEED Solenoid Valve Short Circuit to Low
B1048 - 17 593	Brakes solenoid front function - Circuit open or short to high (12v)
B1049 - 16 595	Brakes solenoid front function - Circuit short to low
B1050 - 17 596	Engine start / stop turntable button - Circuit short to high (10v)
B1051 - 16 597	Engine start / stop turntable button - Circuit short to low
B1052 - 24 598	Engine start / stop turntable button - Signal stuck high
B1053 - 17 599	Foot pedal - Circuit short to high (12v)
B1054 - 16 601	Foot pedal - Circuit short to low
B1055 - 17 602	AUX / Overload override button pressed condition - Circuit short to high (10v)
B1056 - 16 603	AUX / Overload override button pressed condition - Circuit short to low
B1058 - 17 604	Override switch pressed short circuit to high
B1059 - 16 605	Override switch pressed state - Circuit short to low
B1060 - 13 606	Override switch - Signal plausibility failure (Circuit open)
B1061 - 17 607	Override switch unpressed short circuit to high
B1062 - 16 608	Override switch unpressed state - Circuit short to low
B1063 - 92 609	Override switch - Signal plausibility failure (12v)
B1064 - 17 611	Slew acknowledgment button - Circuit short to high (10v)
B1065 - 16 612	Slew acknowledgment button - Circuit short to low
B1066 - 24 613	Slew acknowledgment button - Signal stuck high

© 2026 JCB INDIA LTD

B1067 - 17 614	Potentiometer - Circuit short to high (5.5v)
B1069 - 17 615	Drive joystick - Circuit short to high (5v)
B1070 - 16 617	Drive joystick - Circuit open or short to low
B1071 - 17 618	Platform level turntable switch raise function - Circuit short to high (10v)
B1072 - 17 619	Platform level turntable switch lower function - Circuit short to high (10v)
B1073 - 92 620	Platform level turntable switch both functions - Signal plausibility failure (10v)
B1074 - 16 621	Platform level turntable switch raise function - Circuit short to low
B1075 - 16 622	Platform level turntable switch lower function - Circuit short to low
B1076 - 17 623	Main boom solenoid high side both functions - Circuit short to high (12v)
B1077 - 16 624	Main boom solenoid high side both functions - Circuit short to low
B1078 - 13 625	Main boom solenoid high side both functions - Circuit open
B1079 - 17 626	Main boom solenoid both functions - Valve fault
B1080 - 17 627	Slew solenoid high side both functions - Circuit short to high (12v)
B1081 - 16 628	Slew solenoid high side both functions - Circuit short to low
B1082 - 13 628	Slew solenoid high side both functions - Circuit open
B1083 - 17 630	Slew solenoid both functions - Valve fault.
B1084 - 17 630	MAIN BOOM EXTEND OR RETRACT DIRECTIONAL Solenoid Valve High Side Short Circuit to High OR Short Circuit to Low
B1086 - 13 631	MAIN BOOM EXTEND OR RETRACT DIRECTIONAL Solenoid Valve High Side & Low Side Open Circuit
B1087 - 17 632	MAIN BOOM EXTEND OR RETRACT DIRECTIONAL Solenoid Valve Fault
B1088 - 17 633	Steer solenoid high side both functions - Circuit short to high (12v)
B1089 - 16 634	Steer solenoid high side both functions - Circuit short to low
B1090 - 13 634	Steer solenoid high side and low side both functions - Circuit open
B1091 - 17 635	Steer solenoid both functions - Valve fault
B1092 - 17 636	Artic boom solenoid high side both functions - Circuit short to high (12v)
B1093 - 16 637	Artic boom solenoid high side both functions - Circuit short to low
B1094 - 13 638	Artic boom solenoid high and low side both functions - Circuit open
B1095 - 92 639	Artic boom solenoid both functions - Valve fault
B1096 - 17 639	Artic boom turntable switch raise function - Circuit short to high (10v)
B1097 - 17 640	Artic boom turntable switch lower function - Circuit short to high (10v)
B1098 - 92 641	Artic boom turntable switch - Signal plausibility failure (10v)

© 2026 JCB INDIA LTD

B1099 - 16 643	Artic boom turntable switch raise function - Circuit short to low
B1100 - 16 644	Artic boom turntable switch lower function - Circuit short to low
B1101 - 17 645	MAIN BOOM EXTEND Switch Short Circuit to High
B1102 - 17 646	MAIN BOOM RETRACT Switch Short Circuit to High
B1103 - 92 647	MAIN BOOM EXTEND & RETRACT Switches both activated (5 - 10V)
B1104 - 16 649	MAIN BOOM EXTEND Switch Short Circuit to Low
B1105 - 16 651	MAIN BOOM RETRACT Switch Short Circuit to Low
B1106 - 17 652	Platform rotate turntable switch right function - Circuit short to high (10v)
B1107 - 17 653	Platform rotate turntable switch left function - Circuit short to high (10v)
B1108 - 92 655	Platform rotate turntable switch both functions - Signal plausibility failure (10v)
B1109 - 16 656	Platform rotate turntable switch right function - Circuit short to low
B1110 - 16 658	Platform rotate turntable switch left function - Circuit short to low
B1111 - 17 660	Jib boom turntable switch raise function - Circuit short to high (10v)
B1112 - 17 661	Jib boom turntable switch lower function - Circuit short to high (10v)
B1113 - 92 662	Jib boom turntable switch both functions - Signal plausibility failure (10v)
B1114 - 16 664	Jib boom turntable switch raise function - Circuit short to low
B1115 - 16 666	Jib boom turntable switch lower function - Circuit short to low
B1116 - 17 667	Main boom turntable switch raise function - Circuit short to high (10v)
B1117 - 17 669	Main boom turntable switch lower function - Circuit short to high (10v)
B1118 - 92 670	Main boom turntable switch both functions - Signal plausibility failure (10v)
B1119 - 16 671	Main boom turntable switch raise function - Circuit short to low
B1120 - 16 673	Main boom turntable switch lower function - Circuit short to low
B1121 - 17 675	Slew turntable switch right function - Circuit short to high (10v)
B1122 - 17 676	Slew turntable switch left function - Circuit short to high (10v)
B1123 - 92 678	Slew turntable switch both functions - Circuit short to high (10v)
B1124 - 16 679	Slew turntable switch right function - Circuit short to low
B1125 - 16 681	Slew turntable switch left function - Circuit short to low
B1126 - 17 682	Main boom position switch 1 - Circuit short to high (10v)
B1127 - 17 683	Main boom position switch 2 - Circuit short to high (10v)
B1128 - 16 684	Main boom position switch 1 - Circuit short to low

© 2026 JCB INDIA LTD

B1129 - 13 685	Main boom position switch - Signal plausibility failure (Circuit open)
B1130 - 16 687	Main boom position switch 2 - Circuit short to low
B1131 - 2F 689	Main boom position switch - Signal plausibility failure (10v)
B1133 - 17 690	JIB/PLATFORM FLOW High Side Solenoid Short Circuit to High
B1134 - 16 691	JIB/PLATFORM FLOW High Side Solenoid Short Circuit to Low
B1135 - 13 693	Beacon 2 - Circuit open or short to high (12v)
B1136 - 16 694	Beacon 2 - Circuit short to low
B1138 - 17 695	Main boom telescopic retract limit switch 1 short circuit to high
B1139 - 17 696	Main boom telescopic retract limit switch 2 short circuit to high
B1140 - 16 697	Main boom telescopic retract limit switch 1 short circuit to low
B1141 - 13 698	Main boom telescopic retract limit switch 1 and 2 are both open circuit
B1142 - 16 699	Main boom telescopic retract limit switch 2 short circuit to Low
B1143 - 92 701	Main boom telescopic retract limit switch 1 and 2 Short to 10V
B1144 - 17 702	10v Feed turntable system - Circuit short to high (>10v)
B1145 - 16 703	10v Feed turntable system - Circuit short to low
B1146 - 17 704	Steer joystick - Circuit short to high (5v)
B1147 - 16 705	Steer joystick - Circuit open or short to low
B1148 - 17 706	Main boom joystick - Circuit short to high (5v)
B1149 - 16 708	Main boom joystick - Circuit open or short to low
B1150 - 17 709	Slew joystick - Circuit short to high (5v)
B1151 - 16 710	Slew joystick - Circuit open or short to low
B1154 - 16 712	SLEW JOYSTICK Short Circuit to Low (<0.25V) or Open Circuit
B1167 - 13 713	Platform rotate solenoid left function - Circuit open or short to high (12v)
B1168 - 16 714	Platform rotate solenoid left function - Circuit short to low
B1169 - 13 715	Platform rotate solenoid right function - Circuit open or short to high (12v)
B1170 - 16 716	Platform rotate solenoid right function - Circuit short to low
B1171 - 13 717	Jib boom solenoid raise function - Circuit open or short to high (12v)
B1172 - 16 718	Jib boom solenoid raise function - Circuit short to low
B1173 - 13 719	Jib boom solenoid lower function - Circuit open or short to high (12v)
B1174 - 16 720	Jib boom solenoid lower function - Circuit open or short to low

© 2026 JCB INDIA LTD

B1175 - 13 721	MAIN BOOM LIFT/SLEW DIRECTIONAL Solenoid Valve Short Circuit to High or Open Circuit
B1176 - 16 722	MAIN BOOM LIFT/SLEW DIRECTIONAL Solenoid Valve Short Circuit to Low
B1177 - 16 723	Buzzer turntable - Circuit short to low
B1178 - 13 725	Buzzer turntable - Circuit open or short to high (12v)
B1179 - 13 726	Beacon 1 - Circuit open or short to high (12v)
B1180 - 16 728	Beacon 1 - Circuit short to low
B1181 - 16 729	Horn relay - Circuit short to low
B1182 - 13 730	Horn relay - Circuit open
B1183 - 19 731	White noise alarm - Circuit short to low
B1184 - 13 733	White noise alarm - Circuit open or short to high (12v)
B1186 - 16 734	HYDRAULIC GENERATOR LED Short Circuit to Low
B1187 - 13 735	HYDRAULIC GENERATOR LED Open Circuit
B1188 - 16 737	Caution LED short circuit to low
B1189 - 13 738	Caution LED open circuit
B1190 - 16 739	Fault LED - Circuit short to low
B1191 - 17 740	Fault LED - Circuit short to high (12v)
B1192 - 16 741	Tilt LED short circuit to low
B1193 - 13 743	Tilt LED open circuit
B1194 - 16 744	Overload LED short circuit to low
B1195 - 13 745	Overload LED open circuit
B1196 - 16 746	Low fuel LED short circuit to low
B1197 - 13 747	Low fuel LED open circuit
B1198 - 16 748	Slew acknowledgment LED - Circuit short to low
B1199 - 17 750	Slew acknowledgment LED - Circuit short to high (12v)
B1202 - 16 751	High torque LED output short circuit to low
B1203 - 13 752	High torque LED output open circuit
B1204 - 16 753	High Engine Speed LED output short circuit to low
B1205 - 13 754	High Engine Speed LED output open circuit
B1206 - 17 755	Horn turntable button - Circuit short to high (10v)
B1207 - 16 757	Horn turntable button - Circuit short to low

© 2026 JCB INDIA LTD

B1208 - 24 758	Horn turntable button - Signal stuck high
B1209 - 17 759	High engine speed platform button - Circuit short to high (10v)
B1210 - 16 760	High engine speed platform button - Circuit short to low
B1211 - 24 761	High engine speed platform button - Signal stuck high
B1212 - 17 762	High Torque - High Torque Button Short Circuit to High.
B1213 - 16 764	High Torque - High Torque Button Short Circuit to Low.
B1214 - 24 765	High Torque - High Torque Button Stuck >10s.
B1215 - 17 766	Hydraulic generator button - Circuit short to high (10v)
B1216 - 16 767	Hydraulic generator button - Circuit short to low
B1217 - 24 768	Hydraulic generator button - signal stuck high
B1221 - 17 769	Overload sensor 1 - Out of range (High)
B1222 - 16 772	Overload sensor 1 - Circuit open or out of range (Low)
B1223 - 17 774	Overload sensor 2 - Out of range (High)
B1224 - 16 776	Overload sensor 2 - Circuit open or out of range (Low)
B1225 - 2F 778	Overload sensor - Signal erratic
B1227 - 17 780	Oscillating axle lock pressure sensor - Circuit short to high (12v)
B1228 - 16 782	Oscillating axle lock pressure sensor - Circuit open or short to low
B1232 - 17 783	Fuel level - Signal above allowable range
B1233 - 16 784	Fuel level - Signal below allowable range
B1235 - 17 785	E-stop platform button - Signal plausibility failure
B1236 - 2F 786	Oscillating axle lock pressure sensor - Failure
B1238 - 2F 788	Oscillating axle lock pressure sensor - Output is less than 1v when it should be greater than 1v
B1239 - 17 790	Engine start / stop platform button - Circuit short to high (10v)
B1240 - 16 791	Engine start / stop platform button - Circuit short to low
B1241 - 24 792	Engine start / stop platform button - signal stuck high
B1242 - 17 793	Platform level platform switch raise function - Circuit short to high (10v)
B1243 - 17 794	Platform level platform switch lower function - Circuit short to high (10v)
B1244 - 92 795	Platform level platform switch both functions - Signal plausibility failure (10v)
B1245 - 16 796	Platform level platform switch raise function - Circuit short to low
B1246 - 16 797	Platform level platform switch lower function - Circuit short to low

© 2026 JCB INDIA LTD

B1247 - 17 799	Artic boom platform switch raise function - Circuit short to high (10v)
B1248 - 17 800	Artic boom platform switch lower function - Circuit short to high (10v)
B1249 - 92 801	Artic boom platform switch - Signal plausibility failure (10v)
B1250 - 16 802	Artic boom platform switch raise function - Circuit short to low
B1251 - 16 803	Artic boom platform switch lower function - Circuit short to low
B1252 - 17 804	MAIN BOOM TELESCOPE EXTEND Switch SC to High.
B1253 - 17 805	MAIN BOOM TELESCOPE RETRACT Switch SC to High.
B1254 - 92 806	MAIN BOOM TELESCOPE EXTEND & RETRACT Switches both activated (5 - 10V).
B1255 - 16 807	MAIN BOOM TELESCOPE EXTEND Switch SC to Low.
B1256 - 16 808	MAIN BOOM TELESCOPE RETRACT Switch SC to Low.
B1257 - 17 809	Platform rotate platform switch right function - Circuit short to high (10v)
B1258 - 17 810	Platform rotate platform switch left function - Circuit short to high (10v)
B1259 - 92 811	Platform rotate platform switch both functions - Signal plausibility failure (10v)
B1260 - 16 813	Platform rotate platform switch right function - Circuit short to low
B1261 - 16 814	Platform rotate platform switch left function - Circuit short to low
B1262 - 17 815	Jib boom platform switch raise function - Circuit short to high (10v)
B1263 - 17 816	Jib boom platform switch lower function - Circuit short to high (10v)
B1264 - 92 817	Jib boom platform switch both functions - Signal plausibility failure (10v)
B1265 - 16 818	Jib boom platform switch raise function - Circuit short to low
B1266 - 16 819	Jib boom platform switch lower function - Circuit short to low
B1267 - 17 821	10v Feed platform system - Circuit short to high (>10v)
B1268 - 16 822	10v Feed platform system - Circuit short to low
B1269 - 16 824	Buzzer platform - Circuit short to low
B1270 - 17 825	Buzzer platform - Circuit open or short to high (12v)
B1272-2F 826	OSCILLATING AXLE PRESSURE SENSOR >= 1V and < 6V in stowed mode without drive
B1273 - 17 828	Horn platform button - Circuit short to high (10v)
B1274 - 16 829	Horn platform button - Circuit short to low
B1275 - 24 830	Horn platform button - Signal stuck high
B1276 - 24 831	Startlock failure - Turntable ECU Power supply less than 8.5v
B1277 - 24 832	Startlock failure - Platform ECU Power supply less than 8.5v

© 2026 JCB INDIA LTD

B1278 - 17 834	Brakes solenoid rear function - Circuit open or short to high (12v)
B1279 - 16 836	Brakes solenoid rear function - Circuit short to low
B1281 - 16 837	Startlock failure - VSS2 Low Voltage less than 9.5v
B1282-13 839	Water in fuel OC during engine startup: (Transition from GND to OC is expected within 2 secs of engine ignition ON)
B1283 - 16 840	Startlock failure - VSS1 Low Voltage less then 4.5v
B1284 - 16 841	Startlock failure - VSS2 Low Voltage less than 9.5v
B1285 - 16 842	Startlock failure - VSS3 Low Voltage less than 4.5v
B1286-16 843	Water in fuel short to ground
B1287 - 2F 844	Fuel level - Erratic signal
B1288 - 2F 845	OSCILLATING AXLE PRESSURE SENSOR SOFTWARE Failure
B1300 - 2F 846	ALTERNATOR FAULT - Plausibility fault between low oil pressure input & Alternator input (SCH) 0
B1301 - 2F 848	Oscillating axle lock pressure sensor - Failure
B1302 - 2F 849	CAN RC CONFIG - Signal plausibility failure
B1303 - 2F 850	CAN RC CONFIG - Signal plausibility failure
B1304 - 24 852	Startlock failure - Turntable ECU Internal 5v voltage supply (VSS_1) circuit short to low
B1305 - 24 852	Startlock failure - Turntable ECU Internal 10v voltage supply (VSS_2) circuit short to low
B1306-24 853	Base Startlock Stuck (Generic o/p fault) - Turntable ECU Internal 5v voltage supply (VSS_3) circuit short to low
B1307 - 24 854	Startlock failure - Turntable ECU Internal hardware monitor 1 fault
B1308 - 24 855	Startlock failure - Turntable ECU Proportional outputs circuit short to high (12v)
B1309 - 24 857	Startlock failure - Turntable ECU Switch outputs circuit short to high (12v)
B1310 - 24 859	Startlock failure - Controls enable switch input enabled during startup
B1311-24 860	Base Startlock Stuck (Generic o/p fault) - Turntable ECU Internal hardware monitor 2 fault
B1312 - 24 860	Startlock failure - Turntable ECU 10v input enabled during startup
B1313 - 24 861	Startlock failure - Platform ECU Internal 5v voltage supply (VSS_1) circuit short to low
B1314 - 24 862	Startlock failure - Platform ECU Internal 10v voltage supply (VSS_2) circuit short to low
B1315 - 24 863	Startlock failure - Platform ECU Internal 5v voltage supply (VSS_3) circuit short to low
B1316 - 24 864	Startlock failure - Platform ECU Internal hardware monitor 1 fault

© 2026 JCB INDIA LTD

B1317 - 24 865	Startlock failure - Platform ECU Proportional outputs circuit short to high
B1318 - 24 868	Startlock failure - Platform ECU Switch outputs circuit short to high
B1319 - 24 869	Startlock failure - Foot pedal input enabled during startup
B1320 - 24 871	Startlock failure - Platform ECU Internal hardware monitor 2 fault
B1321 - 24 873	Startlock failure - Platform ECU 10v input enabled during startup
B1329 - 13 874	Jib boom / Platform rotate flow solenoid - Circuit open or short to high (12v)
B1330 - 16 876	Jib boom / Platform rotate flow solenoid - Circuit short to low
B1331 - 13 877	FORWARD OR REVERSE Proportional Solenoid Valve Fault
B1332 - 17 879	PUBLIC Proportional Solenoid Valve Low Side Short Circuit to High
B1333 - 16 879	PUBLIC Proportional Solenoid Valve Low Side Short Circuit to Low
B1334 - 13 880	PUBLIC Proportional Solenoid Valve Fault
B1335 - 17 881	Main boom solenoid low side both functions - Circuit short to high (12v)
B1336 - 16 883	Main boom solenoid low side both functions - Circuit short to low
B1337 - 13 884	Main boom solenoid low side both functions - Circuit open
B1338 - 17 885	Slew solenoid low side both functions - Circuit short to high (12v)
B1339 - 16 887	Slew solenoid low side both functions - Circuit short to low
B1340 - 13 888	Slew solenoid low side both functions - Circuit open
B1341 - 17 890	MAIN BOOM EXTEND OR RETRACT DIRECTIONAL Solenoid Valve Low Side Short Circuit to High
B1342 - 16 890	MAIN BOOM EXTEND OR RETRACT DIRECTIONAL Solenoid Valve Low Side Short Circuit to Low
B1344 - 17 891	Steer solenoid low side both functions - Circuit short to high (12v)
B1345 - 16 892	Steer solenoid low side both functions - Circuit short to low
B1347 - 17 893	Oscillating axle solenoid low side - Circuit short to high (12v)
B1348 - 16 895	Oscillating axle solenoid low side - Circuit short to low
B1349 - 13 896	Oscillating axle solenoid - Valve fault
B1350 - 17 898	Artic boom solenoid low side both functions - Circuit short to high (12v)
B1351 - 16 899	Artic boom solenoid low side both functions - Circuit short to low
B1353 - 16 900	Engine ignition - Circuit short to low
B1354 - 13 901	Engine ignition - Circuit open or short to high (12v)
B1355 - 16 902	Hydraulic generator solenoid - Circuit short to low
B1356 - 13 903	Hydraulic generator solenoid high side - Circuit open or short to high (12v)

© 2026 JCB INDIA LTD

B1357 - 16 904	Engine crank signal - Circuit short to low
B1358 - 13 905	Engine crank signal - Circuit open or short to high (12v)
B1541 - 13 906	Weight sensor - No Calibration data available for Load Cell.
B1681 - 13 908	Unexpected Alternator input fault Short to low (When engine is started / Engine running)
B1682 - 13 909	Unexpected low oil pressure input Short to Low / GND (When engine is started / Engine running)
B1694-17 911	Electric pump switch unpressed SC to high
B1695-16 912	Electric pump switch unpressed SC to low
B1696-13 913	Electric pump button switch pressed & switch unpressed OC
B1697-92 914	Electric pump switch pressed & switch unpressed SC to 10V
U0073 - 87 915	CAN1 node error
U0411 - 87 916	EGR no transmission/not received failure (for CAN)
U1001 - 87 917	CAN2 node error
U1293 - 87 918	CAN CAN TIME OUT ERROR
U1294 - 56 920	CAN CAN RC ERROR - Rolling counter for platform input signal1 message
U1295 - 41 923	CAN CAN CHECK SUM ERROR
U1296 - 87 925	CAN CAN TIME OUT ERROR
U1298 - 41 927	CAN CAN CHECK SUM ERROR
U1297-56 929	CAN RC ERROR
U1299 - 87 931	CAN Signal pairing failure
U1323 - 56 933	CAN CAN RC ERROR - Rolling counter for platform output signal1 message
U1324 - 56 936	CAN CAN RC ERROR
U1325 - 56 938	CAN CAN RC ERROR
U1326 - 41 940	CAN CAN CHECK SUM ERROR
U1327 - 41 942	CAN CAN CHECK SUM ERROR
U1328 - 41 944	CAN CAN CHECK SUM ERROR
U1900 - 16 946	LIVELINK - VEHICLE VOLTAGE BELOW NORMAL
U1901 - 16 947	LIVELINK - INTERNAL VOLTAGE BELOW NORMAL
U1904 - 85 948	LIVELINK - ECU ABOVE TEMPERATURE THRESHOLD
U1905 - 84 948	LIVELINK - ECU BELOW TEMPERATURE THRESHOLD

© 2026 JCB INDIA LTD

U1906 - 96 949	LIVELINK - ACCELEROMETER INTERNAL FAILURE
U1907 - 09 949	LIVELINK - MODEM JAMMED
U1908 - 09 950	LIVELINK - GPS ANTENNA NOT OK
U1909 - 96 951	LIVELINK - NO COMMS WITH GPS MODULE
U190A - 09 952	SIM Card Failure
U190B - 96 953	LIVELINK - NO COMMS WITH GSM MODULE
U190C - 86 954	LIVELINK - GSM NETWORK REGISTRATION FAILED

5.1.1 B1001-17

Error code:	**B1001-17**
ECU	Base ECU
Description:	E-Stop & Base Override - E-Stop Plausibility Check
Component:	E-Stop(s)
Vehicle reaction:	Disable all outputs except CAN (Emergency stop pressed) Default to E-Stop pressed condition
Possible Cause:	1. A short circuit within the wiring harness 2. A poor connection or damaged terminal within the connector(s) 3. A damaged or broken wire within the wiring harness 4. Component is damaged
Service Action:	1. Check no short in wiring harness between E-STOP SWITCH +VE to GND or E-STOP -VE to GND on Base E-Stop terminals. 2. Check terminals for damage at E-stop terminals, -C50_TCP(terminals 24/31 and 25/31), -C50_TH(terminals 24/31 and 25/31) and on Base Bosch ECU Connector (-C27-XC1_TH, Pin 14/96 and -C27-XC2_TH, Pin 28/58). 3. Check Continuity of wire #4005-#3049 and #6006 between Bosch Base ECU and E-Stop terminals. 4. Check operation of E-Stop switch to ensure correct switching. Contacts should be normally closed during normal operation (Unpressed) and Open contacts when switch is pressed. Switch terminal attached to wire #3049 should be 12V (unpressed) and 0V (pressed). Switch terminal attached to wire #6006 should be 0V (GND) (Unpressed) and open circuit to GND when pressed. IF fault found, check operation of switch with multimeter, checking the closed and open conditions.

© 2026 JCB INDIA LTD



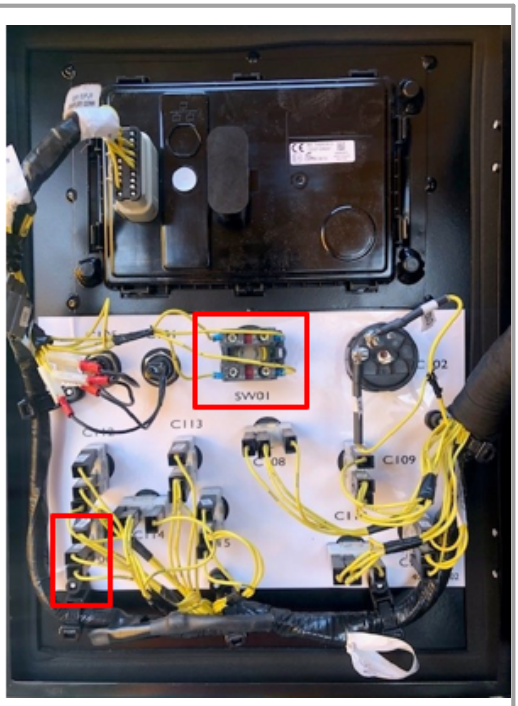

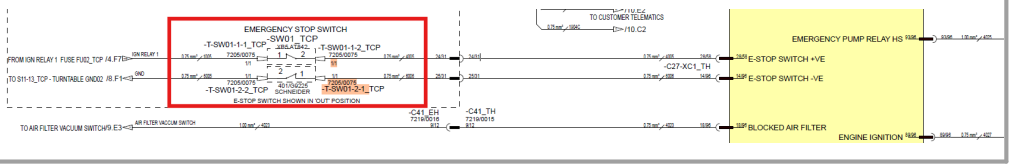

5.1.2 B1005-17

Error code:	B1005-17
ECU	Base ECU
Description:	E-Stop & Base Override - Base Enable Switch Short Circuit to High
Component:	Base Enable Switch
Vehicle reaction:	Before operation: Default to platform controls Allow base override After operation: Refer to 10V System Short Circuit Fault reaction
Possible Cause:	1. A short circuit within the wiring harness 2. A short circuit within the harness connectors 3. Water damage/ingress within the harness connectors 4. Damaged component
Service Action:	1. Check wiring between Override Switch and Base Bosch ECU. Check interconnect connector. Check wiring and diode between override switch and

© 2026 JCB INDIA LTD

e-stop switch.
2. Disconnect connector to Bosch ECU, check continuity between override switch terminals -C200-3 & -C200-1. This should be 'Open Circuit'. Investigate if testing does not concur.
3. Check connectors are dry and free of any debris. Check for damaged pins on the Bosch connectors.
4. Check operation of Override Switch.



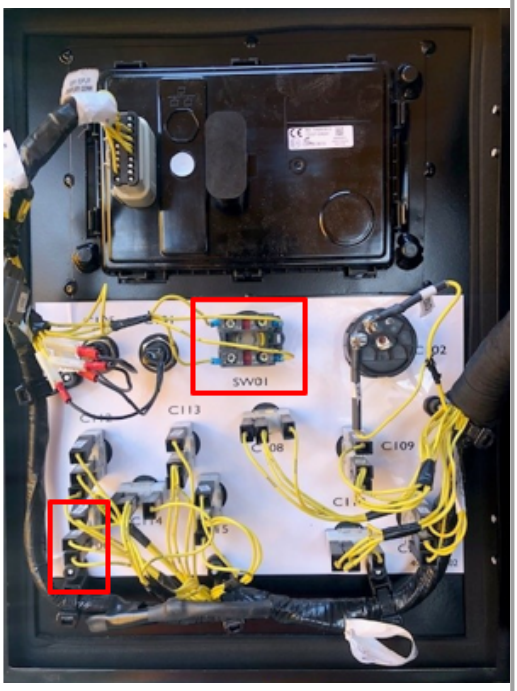

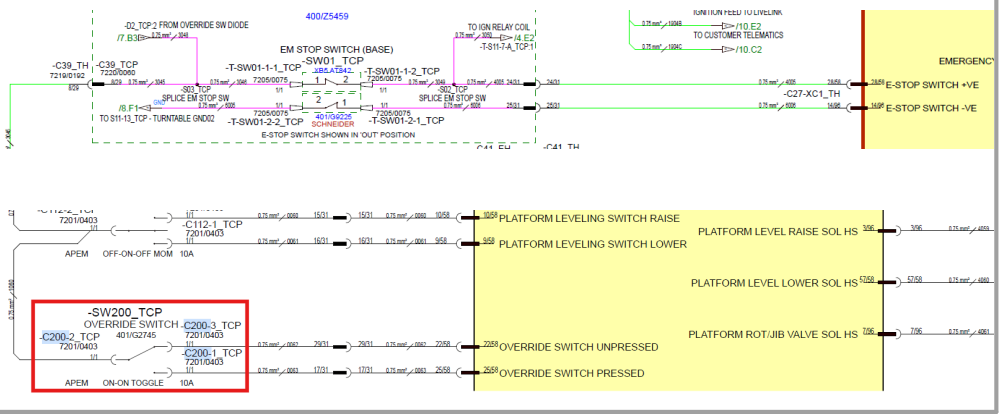

5.1.3 B1006-17

Error code:	B1006-17
ECU	Platform ECU
Description:	Platform AUX/Override - Platform AUX/Override Button Short Circuit to High

© 2026 JCB INDIA LTD

Component :	Platform AUX/Override Button
Vehicle reaction:	Before operation: Disable engine and default to platform controls Allow base override After operation: Refer to 10V System Short Circuit Fault reaction
Possible Cause:	1. A short circuit within the wiring harness 2. A short circuit within the harness connectors 3. Water damage/ingress within the harness connectors 4. Damaged component
Service Action:	1. Check wiring between Platform Override Switch and Platform Bosch ECU. 2. Disconnect connector to Bosch ECU, check continuity between override switch terminals -C209-1 & -C209-2. This should be 'Open Circuit'. Investigate if testing does not concur. 3. Check connectors are dry and free of any debris. Check for damaged pins on the Bosch connectors. 4. Check operation of Override Switch.  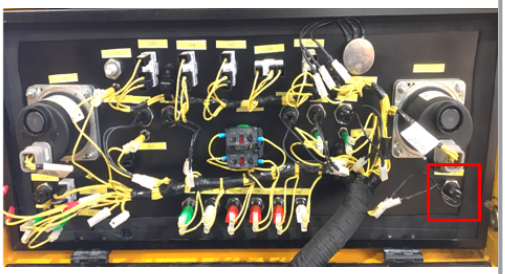 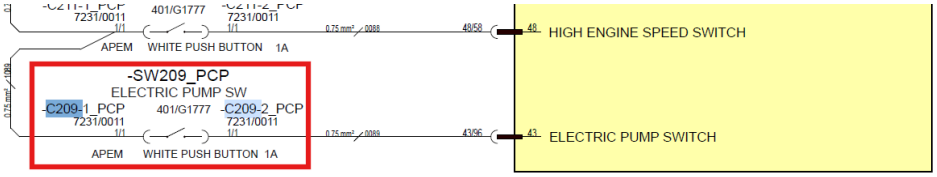

5.1.4 B1007-16

Error code:	**B1007-16**
ECU	Base ECU
Description :	Platform Enable & Base Enable Selector both activated (5 - 10V)
Component :	Base Enable Switch
Vehicle reaction:	Disable engine and default to platform controls Allow base override

© 2026 JCB INDIA LTD

Possible Cause:	1. A short circuit within the wiring harness 2. A short circuit within the harness connectors 3. Water damage/ingress within the harness connectors 4. Damaged component
Service Action:	1. Check wiring between Platform Electric Pump Switch and Platform Bosch ECU. 2. Disconnect connector to Bosch ECU, check continuity between Electric Pump Switch terminals -C209-3 & -C209-1. This should be 'Open Circuit'. Investigate if testing does not concur. 3. Check connectors are dry and free of any debris. Check for damaged pins on the Bosch connectors. 4. Check operation of Electric Pump Switch.



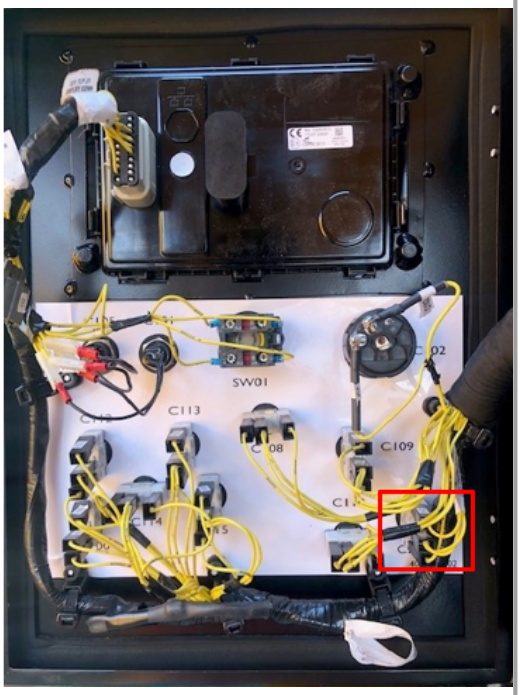

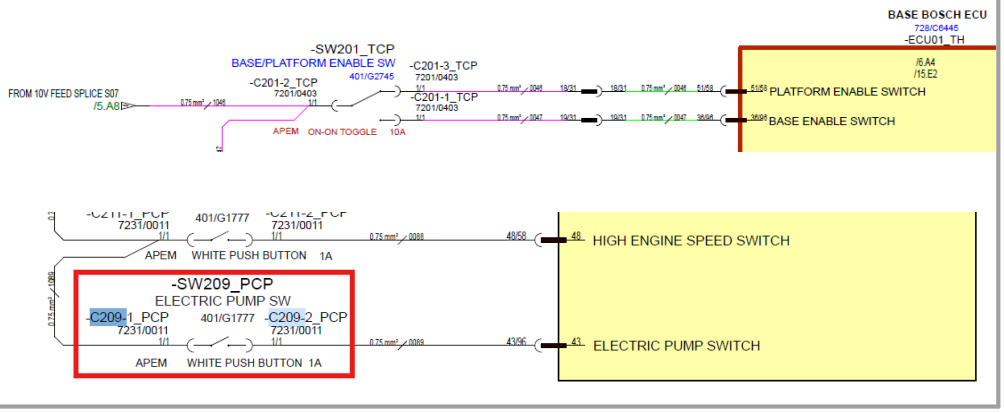

© 2026 JCB INDIA LTD

5.1.5 B1008-16

Error code:	B1008-16
ECU	Base ECU
Description:	E-Stop & Base Override - Base Enable Switch Short Circuit to Low
Component:	Base Enable Switch
Vehicle reaction:	Before operation: Disable engine and default to platform controls Allow base override After operation: Refer to 10V System Short Circuit Fault reaction
Possible Cause:	1. A short circuit within the wiring harness 2. A short circuit to the chassis 3. A short circuit within the harness connectors 4. Water damage/ingress within the harness connectors 5. Damaged component
Service Action:	1. Check wiring between Override Switch and Base Bosch ECU. Check interconnect connector. Check wiring and diode between override switch and e-stop switch. 2. Check the wiring has not been shorted to the chassis of the vehicle (caused perhaps by pinching or abrasion). 3. Disconnect connector to Bosch ECU, check continuity between override switch terminals -C200-3 & -C200-1. This should be 'Open Circuit'. Investigate if testing does not concur. 4. Check connectors are dry and free of any debris. Check for damaged pins on the Bosch connectors. 5. Check operation of Override Switch. Check for any physical damage to the switch, connectors or harness components.

© 2026 JCB INDIA LTD



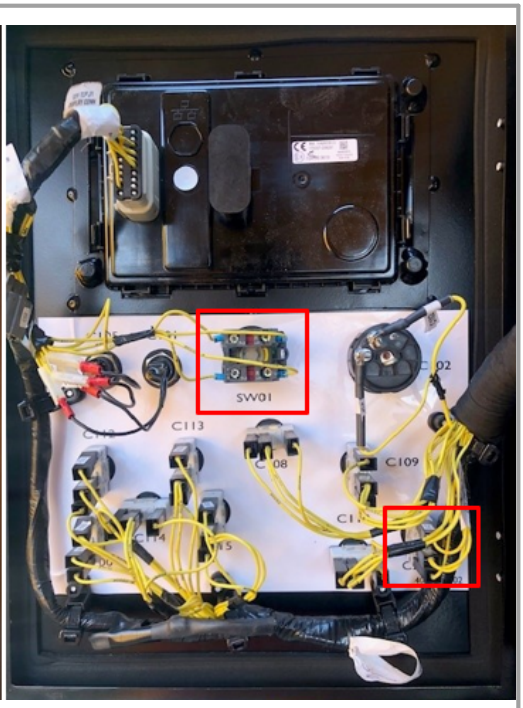

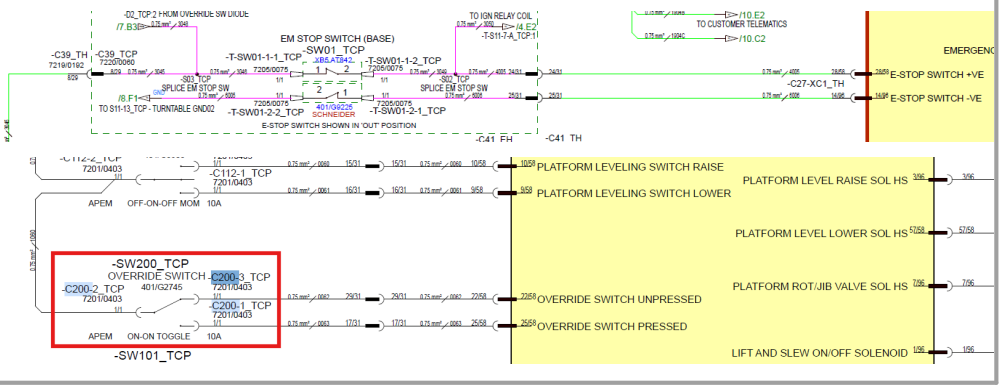

5.1.6 B1009-16

Error code:	B1009-16
ECU	Platform ECU
Description:	Platform AUX/Override - Platform AUX/Override Switch Short Circuit to Low
Component:	Platform AUX/Override Button
Vehicle reaction:	Before operation: Disable engine and default to platform controls Allow base override After operation: Refer to 10V System Short Circuit Fault reaction

© 2026 JCB INDIA LTD

Possible Cause:	1. A short circuit within the wiring harness 2. A short circuit to the chassis 3. A short circuit within the harness connectors 4. Water damage/ingress within the harness connectors 5. Damaged component
Service Action:	1. Check wiring between Platform Electric Pump Switch and Platform Bosch ECU. 2. Check the wiring has not been shorted to the chassis of the vehicle (caused perhaps by pinching or abrasion). 3. Disconnect connector to Bosch Platform ECU, check continuity between Electric Pump switch terminals -C209-3 & -C209-1. This should be 'Open Circuit'. Investigate if testing does not concur. 4. Check connectors are dry and free of any debris. Check for damaged pins on the Bosch connectors. 5. Check operation of Electric Pump Switch. Check for any physical damage to the switch, connectors or harness components.  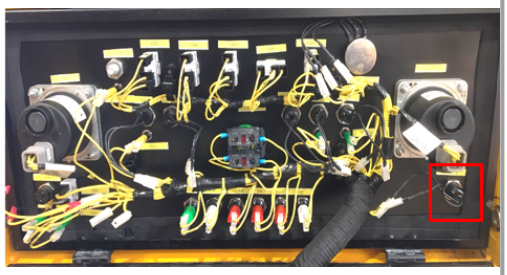 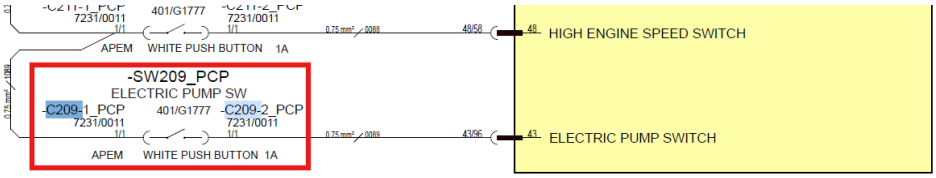

5.1.7 B1010-13

Error code:	**B1010-13**
ECU	Base ECU
Description:	Base Enable Switch Open Circuit AND Platform Enable Switch Open Circuit
Component:	Base Enable Switch
Vehicle reaction:	Disable engine and default to platform controls. Allow base override
Possible Cause:	1. A poor connection or damaged terminal within the connector(s) 2. A damaged or broken wire within the wiring harness

© 2026 JCB INDIA LTD

	3. Component is damaged
Service Action:	1. At Base Control Panel, measure voltage at Base/Platform Enable Switch Terminal -C201-2_TCP (Measure between Terminal and Turntable Ground). If voltage is not present, Check interconnect -C50_TH (31-way HDP). Measure Voltage at pin 30/31 (Wire #1046). If voltage not present, Check continuity from -C50_TH Pin 30 to Bosch Base ECU Pin 32/58 (Wire #1046A) (Disengage Bosch ECU connector to perform this test). If no continuity - Check Continuity from Bosch Base ECU Pin 32/58 to -C50_TH pin 31/31 (Wire #1065). Note, this should be the same voltage and continuity as Pin 30/31. If Pin -C50_TH Pin 31 has continuity and voltage is present, Consider wire break of Wire #1046 between Splice -S07_TH and -C50 Pin 30/31. 2. Check Interconnects -C50_TH and -C50_TCP. Check for backed out pins or wire damage to pins. Check interconnects -C50_TCP Pins 18/31 and 19/31. Check Continuity from Base/Platform Enable Switch -C201-3 to Base Bosch ECU Pin 51/58 and also from -S201-1 to Base Bosch ECU Pin 36/96. 3. Confirm correct operation of Base/Platform Enable Switch -SW201_TCP. Check all wiring is intact.  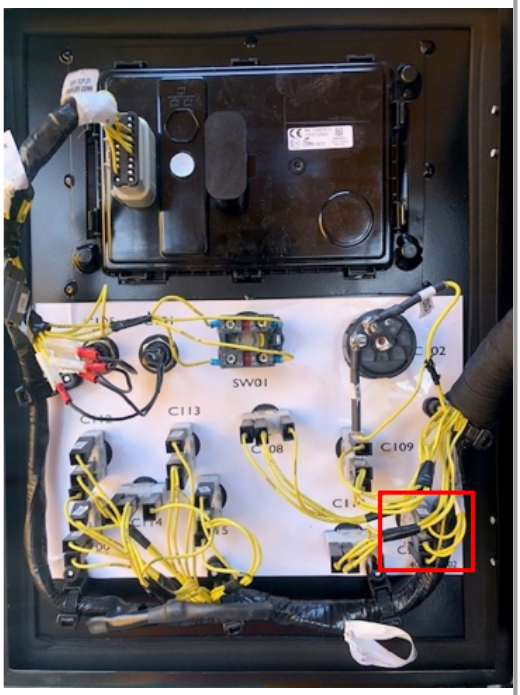 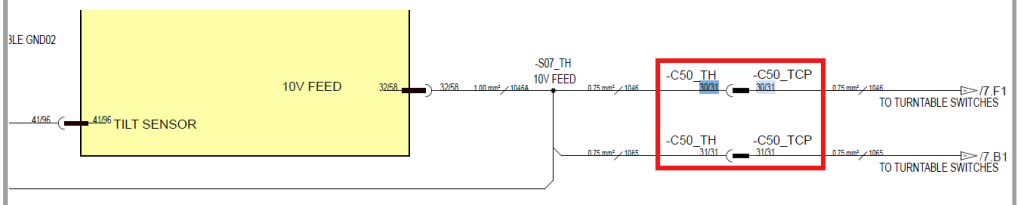

© 2026 JCB INDIA LTD

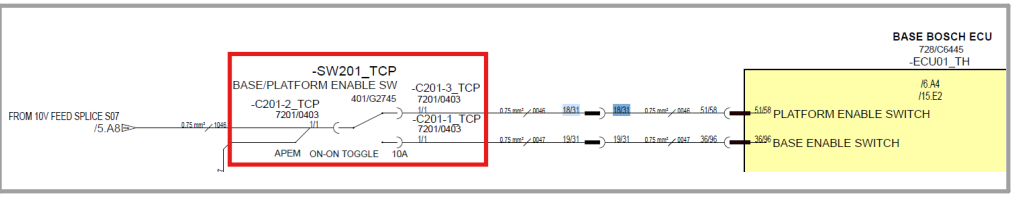

5.1.8 B1011-17

Error code:	B1011-17
ECU	Base ECU
Description:	Artic Boom Lower Limit Switch 1 Short Circuit to High
Component:	Artic Boom Lower Limit Switch
Vehicle reaction:	Default to raised position so machine is at slow speed, prevent main boom raise, articulated boom raise and telescopic extend functions
Possible Cause:	1. A short circuit within the wiring harness 2. A short circuit within the harness connectors 3. Water damage/ingress within the harness connectors 4. Damaged component
Service Action:	1. Remove switch cover lid. 2. Check for water ingress/corrosion. 3. Check inputs on pin 13 and 21 for 10volt input. 4. Check Ground cable 1046C for and cut or damage. 5. Check Base ECU pin 37/96 and 24/58 for bent or loose connection. 6. Check wire from limit switch to Base ECU connector 4009 and 4011. 7. Check if valve is mechanically jammed 8. Check switch function with multi-meter. 9. Turn machine ignition on and off to clear code.

© 2026 JCB INDIA LTD





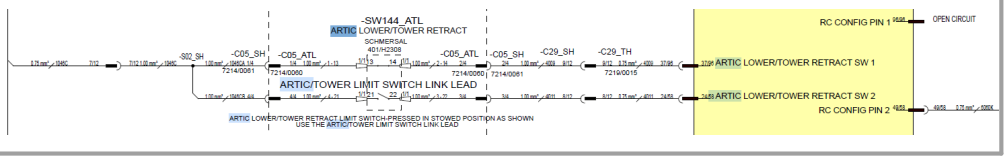

5.1.9 B1012-17

Error code:	B1012-17
ECU	Base ECU
Description:	Artic Boom Lower Limit Switch 2 Short Circuit to High
Component:	Artic Boom Lower Limit Switch
Vehicle reaction:	Default to raised position so machine is at slow speed, prevent main boom raise, articulated boom raise and telescopic extend functions
Possible Cause:	1. A short circuit within the wiring harness 2. A short circuit within the harness connectors 3. Water damage/ingress within the harness connectors 4. Damaged component
Service Action:	1. Remove switch cover lid. 2. Check for water ingress/corrosion. 3. Check inputs on pin 13 and 21 for 10volt input. 4. Check Ground cable 1046C for and cut or damage. 5. Check Base ECU pin 37/96 and 24/58 for bent or loose connection. 6. Check wire from limit switch to Base ECU connector 4009 and 4011. 7. Check if valve is mechanically jammed 8. Check switch function with multi-meter.

© 2026 JCB INDIA LTD

	9. Turn machine ignition on and off to clear code.   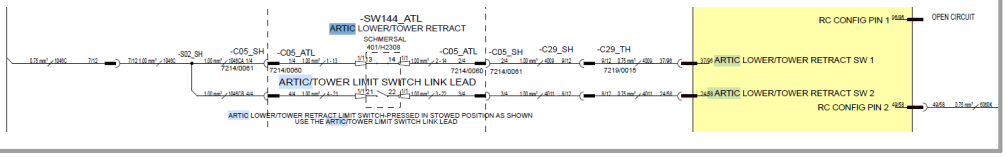

5.1.10 B1013-16

Error code:	B1013-16
ECU	Base ECU
Description:	Artic Boom Lower Limit Switch 1 Short Circuit to Low
Component:	Artic Boom Lower Limit Switch
Vehicle reaction:	Default to raised position so machine is at slow speed, prevent main boom raise, articulated boom raise and telescopic extend functions
Possible Cause:	1. A short circuit within the wiring harness 2. A short circuit within the harness connectors 3. Water damage/ingress within the harness connectors 4. Damaged component
Service Action:	1. Remove switch cover lid. 2. Check for water ingress/corrosion. 3. Check inputs on pin 13 and 21 for 10volt input. 4. Check Ground cable 1046C for and cut or damage. 5. Check Base ECU pin 37/96 and 24/58 for bent or loose connection. 6. Check wire from limit switch to Base ECU connector 4009 and 4011.

© 2026 JCB INDIA LTD

	7. Check if valve is mechanically jammed 8. Check switch function with multi-meter. 9. Turn machine ignition on and off to clear code.   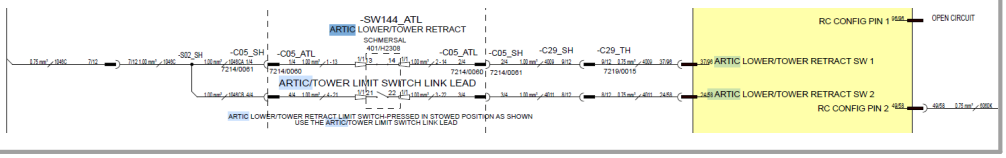

5.1.11 B1014-13

Error code:	B1014-13
ECU	Base ECU
Description:	Artic Boom Lower Limit Switch 1 AND Switch 2 Open Circuit
Component:	Limit Switch
Vehicle reaction:	Default to raised position so machine is at slow speed, prevent main boom raise, articulated boom raise and telescopic extend functions.
Possible Cause:	1. Poor connection 2. Break in wiring 3. Water in switch 4. Broken switch
Service Action:	1. Remove switch cover lid. 2. Check for water ingress/corrosion. 3. Check inputs on pin 13 and 21 for 10volt input.

© 2026 JCB INDIA LTD

	4. Check Ground cable 1046C for and cut or damage. 5. Check Base ECU pin 37/96 and 24/58 for bent or loose connection. 6. Check wire from limit switch to Base ECU connector 4009 and 4011. 7. Check if valve is mechanically jammed 8. Check switch function with multi-meter. 9. Turn machine ignition on and off to clear code.   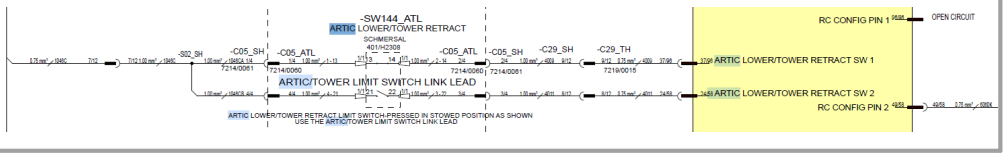

5.1.12 B1015-16

Error code:	B1015-13
ECU	Base ECU
Description:	Artic Boom Lower Limit Switch 2 Short Circuit to Low
Component:	Artic Boom Lower Limit Switch
Vehicle reaction:	Default to raised position so machine is at slow speed, prevent main boom raise, articulated boom raise and telescopic extend functions
Possible Cause:	1. A short circuit within the wiring harness 2. A short circuit within the harness connectors 3. Water damage/ingress within the harness connectors 4. Damaged component

© 2026 JCB INDIA LTD

Service Action:	1. Remove switch cover lid. 2. Check for water ingress/corrosion. 3. Remove switch cover, Check if pin 22 as continuity to ground 4. Check inputs on pin 13 and 21 for 10volt input. 5. Check Ground cable 1046C for and cut or damage. 6. Check Base ECU pin 37/96 and 24/58 for bent or loose connection. 7. Check wire from limit switch to Base ECU connector 4009 and 4011. 8. Check if valve is mechanically jammed 9. Check switch function with multi-meter. 10. Turn machine ignition on and off to clear code.   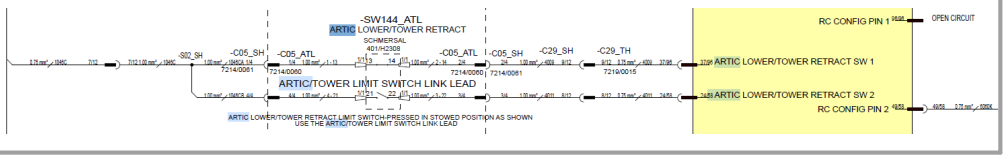

5.1.13 B1016-92

Error code:	**B1016-92**
ECU	Base ECU
Description:	Artic Boom Lower Limit Switch 1 AND Switch 2 short to 10V
Component:	Artic Boom Lower Limit Switch
Vehicle reaction:	default to raised position so machine is at slow speed, prevent main boom raise, articulated boom raise and telescopic extend functions.

© 2026 JCB INDIA LTD

Possible Cause:	1. Poor connection 2. Break in wiring 3. Water in switch 4. Broken switch
Service Action:	1. Remove switch cover lid. 2. Check for water ingress/corrosion. 3. Check inputs on pin 13 and 21 for 10volt input. 4. Check Ground cable 1046C for and cut or damage. 5. Check Base ECU pin 37/96 and 24/58 for bent or loose connection. 6. Check wire from limit switch to Base ECU connector 4009 and 4011. 7. Check if valve is mechanically jammed 8. Check switch function with multi-meter. 9. Turn machine ignition on and off to clear code.   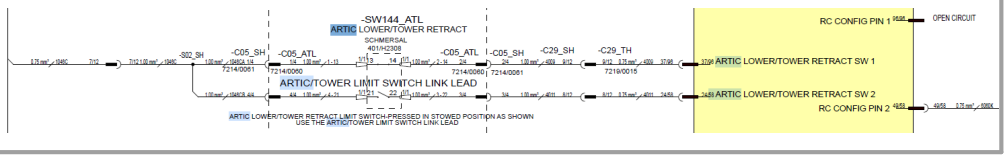

5.1.14 B1017-17

Error code:	**B1017-17**
ECU	Base ECU
Description:	TILT Sensor SC to High (not possible to detect until sensor connected to 10V)

© 2026 JCB INDIA LTD

Component :	Tilt Sensor
Vehicle reaction:	Implement tilt alarm, when in raised position: prevent travel, prevent main boom and articulated boom raise and telescopic extend blocked
Possible Cause:	1. Tilt Sensor not connected correctly 2. A short circuit within the wiring harness 3. A short circuit within the harness connectors 4. Water damage/ingress within the harness connectors 5. Damaged or Faulty component
Service Action:	1. Check connections to tilt sensor 2. Check the voltage at Pin A (should read 12V) if no voltage need to investigate as per schemetic 2. Check wiring at tilt sensor connector 3. Recalibrate Til Sensor 4. Replace the tilt sensor if damage or Faulty 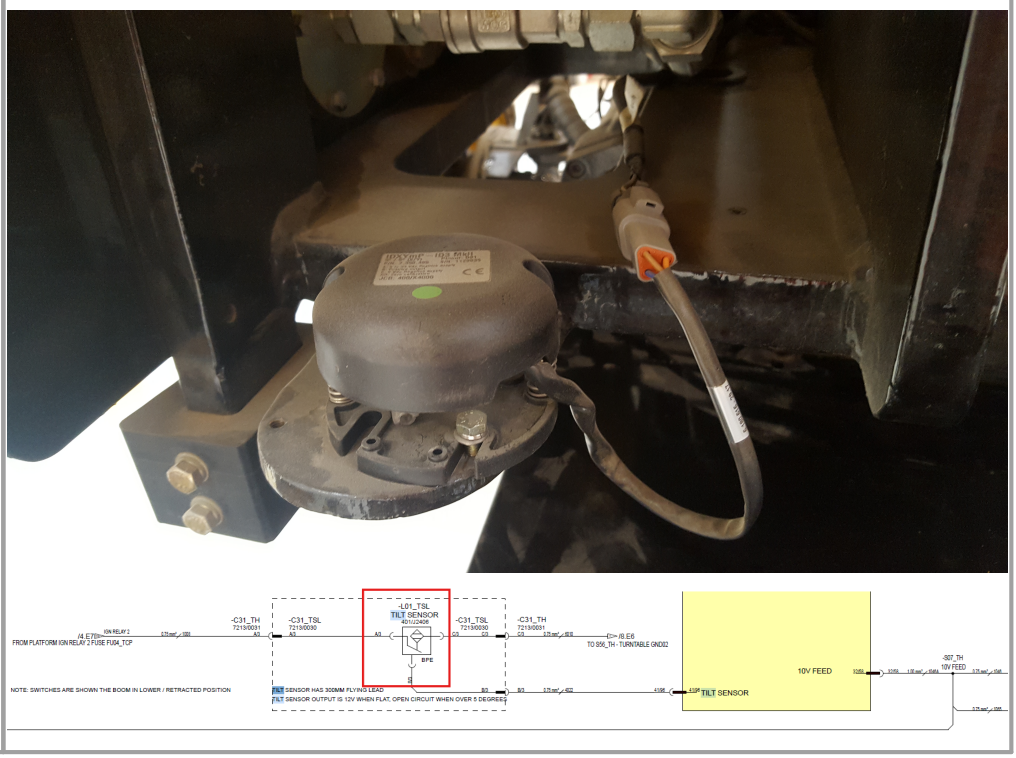

5.1.15 B1018-16

Error code:	**B1018-16**

© 2026 JCB INDIA LTD

ECU	Base ECU
Description:	Tilt Sensor short circuit to low
Component:	Tilt Sensor
Vehicle reaction:	Implement tilt alarm, when in raised position: prevent travel, prevent main boom and articulated boom raise and telescopic extend blocked
Possible Cause:	1. Tilt Sensor not connected correctly 2. A short circuit within the wiring harness 3. A short circuit within the harness connectors 4. Water damage/ingress within the harness connectors 5. Damaged or Faulty component
Service Action:	1. Check connections to tilt sensor 2. Check the voltage at Pin A (should read 12V) if no voltage need to investigate as per schemetic 2. Check wiring at tilt sensor connector 3. Recalibrate Til Sensor 4. Replace the tilt sensor if damage or Faulty  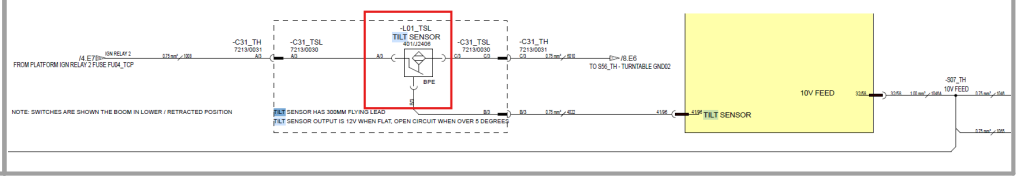

© 2026 JCB INDIA LTD

5.1.16 B1019-17

Error code:	B1019-17
ECU	Base ECU
Description:	SLEW POSITION Limit Switch 1 Short Circuit to High
Component:	Slew Limit Switch 1
Vehicle reaction:	Default to Slew position Implement slew acknowledge safety function (SF#10) in all positions Implement axle lock in all positions (axle is locked)
Possible Cause:	1. A short circuit within the wiring harness 2. A short circuit within the harness connectors 3. Water damage/ingress within the harness connectors 4. Damaged component
Service Action:	1. Measure voltage of Slew Position Switch -SW148_SPL Pin 14. Actuate the switch to check that the voltage level changes between 10V and 0V. If this does not happen, check operation of switch. Check Interconnect -C30_SPL / -C30_TH. Check pins at Base Bosch ECU connector. Observe harness, Check for any pinching / damage. 2. Disconnect terminal from Pin 14, measure voltage of wire. If voltage is high 10V (or Higher) then there is a short circuit to high within the harness. 3. Check for water ingress at the switch terminals, The interconnects and at the Base Bosch ECU connectors. 4. Check the Switch, Interconnects, Base Bosch ECU and harnessing connectors for any damage. Pay particular attention to ECU pins as these could be bent.

© 2026 JCB INDIA LTD



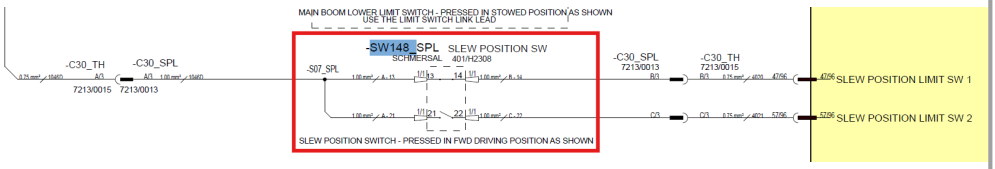

5.1.17 B1020-17

Error code:	B1020-17
ECU	Base ECU
Description:	SLEW POSITION Limit Switch 2 Short Circuit to High
Component:	Slew Limit Switch 2
Vehicle reaction:	Default to Slew position Implement slew acknowledge safety function (SF#10) in all positions Implement axle lock in all positions (axle is locked)
Possible Cause:	1. A short circuit within the wiring harness 2. A short circuit within the harness connectors 3. Water damage/ingress within the harness connectors 4. Damaged component
Service Action:	1. Measure voltage of Slew Position Switch -SW148_SPL Pin 22. Actuate the switch to check that the voltage level changes between 10V and 0V. If

© 2026 JCB INDIA LTD

	this does not happen, check operation of switch. Check Interconnect - C30_SPL / -C30_TH. Check pins at Base Bosch ECU connector. Observe harness, Check for any pinching / damage. 2. Disconnect terminal from Pin 22, measure voltage of wire. If voltage is high 10V (or Higher) then there is a short circuit to high within the harness. 3. Check for water ingress at the switch terminals, The interconnects and at the Base Bosch ECU connectors. 4. Check the Switch, Interconnects, Base Bosch ECU and harnessing connectors for any damage. Pay particular attention to ECU pins as these could be bent.  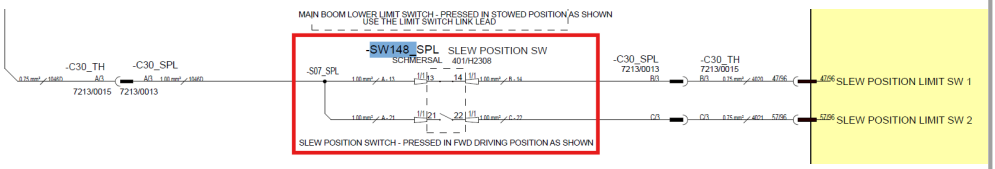

5.1.18 B1021-16

Error code:	**B1021-16**
ECU	Base ECU
Description:	SLEW POSITION Limit Switch 1 Short Circuit to Low
Component:	Slew Limit Switch 1

© 2026 JCB INDIA LTD

Vehicle reaction:	Default to Slew position Implement slew acknowledge safety function (SF#10) in all positions Implement axle lock in all positions (axle is locked)
Possible Cause:	1. A short circuit within the wiring harness 2. A short circuit to the chassis 3. A short circuit within the harness connectors 4. Water damage/ingress within the harness connectors 5. Damaged component
Service Action:	1. Measure voltage of Slew Position Switch -SW148_SPL Pin 14. Actuate the switch to check that the voltage level changes between 0V and 10V. If this does not happen, check operation of switch. Check Interconnect -C30_SPL / -C30_TH. Check pins at Base Bosch ECU connector. Observe harness, Check for any pinching / damage. 2. Disconnect terminal from Pin 14, measure voltage of switch output at this pin. If voltage remains at 0V when switch is actuated then there is a short circuit to ground within the switch or the input to the switch. 3. Check for water ingress at the switch terminals, The interconnects and at the Base Bosch ECU connectors. 4. Check the Switch, Interconnects, Base Bosch ECU and harnessing connectors for any damage. Pay particular attention to ECU pins as these could be bent.  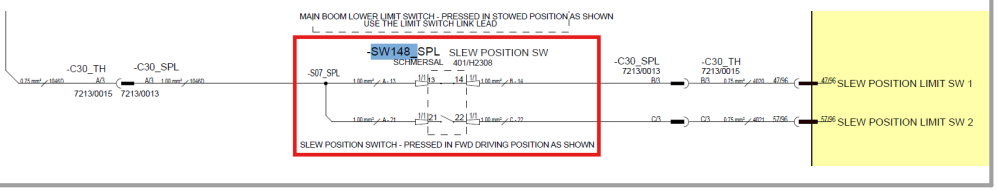

© 2026 JCB INDIA LTD

5.1.19 B1022-13

Error code:	B1022-13
ECU	Base ECU
Description:	SLEW POSITION Limit Switch 1 and SLEW POSITION Limit Switch 2 Open Circuit
Component:	Slew Limit Switch(es)
Vehicle reaction:	1. Default to Slew position 2. Implement slew acknowledge safety function (SF#10) in all positions 3. Implement axle lock in all positions (axle is locked)
Possible Cause:	1. A poor connection or damaged terminal within the connector(s) 2. A damaged or broken wire within the wiring harness 3. Component is damaged
Service Action:	1. Check Terminals at Slew Position Switch -SW148_SPL. Check Terminals at interconnects -C30_SPL / -C30_TH. Check terminals at Base Bosch ECU Connectors. Ensure all connectors are fully seated. 2. Check continuity with resistance meter between -C30_TH to Slew Position Switch -SW148_SPL terminals. Check from -C30_TH Pins B and C to Base Bosch ECU Connector Pins 47/96 and 57/96 respectively. 3. Check Operation of Slew Position Switch. Observe all parts for damage. Check terminals no9t backed out in Base Bosch ECU Connector. Check Terminals within -C30_TH and -C30_SPL,  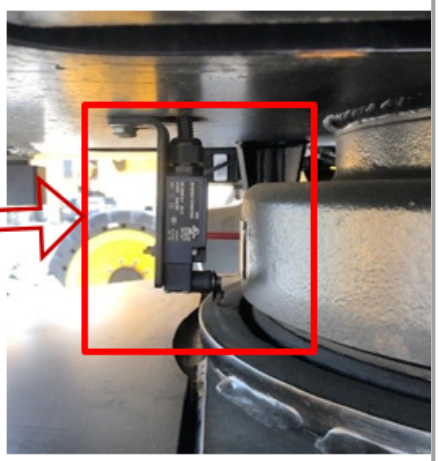 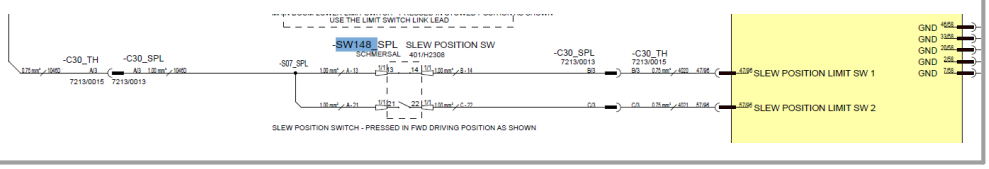

© 2026 JCB INDIA LTD

5.1.20 B1023-16

Error code:	B1023-16
ECU	Base ECU
Description:	SLEW POSITION Limit Switch 2 Short Circuit to Low
Component:	Slew Limit Switch 2
Vehicle reaction:	Default to Slew position Implement slew acknowledge safety function (SF#10) in all positions Implement axle lock in all positions (axle is locked)
Possible Cause:	1. A short circuit within the wiring harness 2. A short circuit to the chassis 3. A short circuit within the harness connectors 4. Water damage/ingress within the harness connectors 5. Damaged component
Service Action:	1. Measure voltage of Slew Position Switch -SW148_SPL Pin 22. Actuate the switch to check that the voltage level changes between 0V and 10V. If this does not happen, check operation of switch. Check Interconnect -C30_SPL / -C30_TH. Check pins at Base Bosch ECU connector. Observe harness, Check for any pinching / damage. 2. Disconnect terminal from Pin 22, measure voltage of switch output at this pin. If voltage remains at 0V when switch is actuated then there is a short circuit to ground within the switch or the input to the switch. 3. Check for water ingress at the switch terminals, The interconnects and at the Base Bosch ECU connectors. 4. Check the Switch, Interconnects, Base Bosch ECU and harnessing connectors for any damage. Pay particular attention to ECU pins as these could be bent. 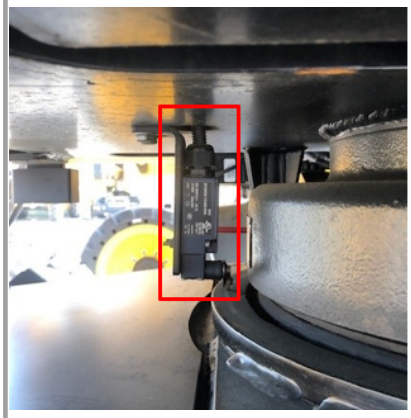 

© 2026 JCB INDIA LTD

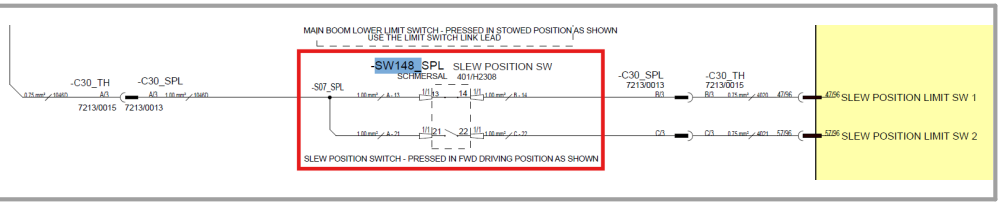

5.1.21 B1024-92

Error code:	B1024-92
ECU	Base ECU
Description:	SLEW POSITION Limit Switch 1 and SLEW POSITION Limit Switch 2 Short Circuit to 10V or 12V
Component:	Slew Limit Switch(es)
Vehicle reaction:	Default to Slew position Implement slew acknowledge safety function (SF#10) in all positions Implement axle lock in all positions (axle is locked)
Possible Cause:	1. A short circuit within the wiring harness 2. A short circuit within the harness connectors 3. Water damage/ingress within the harness connectors 4. Damaged component
Service Action:	1. Disconnect interconnect connectors from each other (-C30_SPL and -C30_TH). Measure continuity on -C30_SPL Terminal B and C. This should be 'Open Circuit'. Actuate the switch, The measurement should remain 'Open Circuit'. If the measurements do not concur with this, then check wiring terminals at Slew Position Switch -SW148_SPL and check wiring from Switch to connector. 2. With Interconnects disconnected from each other, Check wires 4020 and 4021 are not shorted together. 3. Check Bosch Base ECU Connectors for Damage, Bent pins and water ingress. 4. Check Switch or harness for damage.

© 2026 JCB INDIA LTD



5.1.22 B1025-13

Error code:	B1025-13
ECU	Platform ECU
Description:	Crush Protection - Plausibility Check
Component:	Crush Protection Switch(es)
Vehicle reaction:	Detect failure mode and activate Crush protection functionality; Also includes Short Circuit to Low
Possible Cause:	1. A short or open circuit within the wiring harness 2. A short to the Chassis or other signal 3. Water damage to the component, connectors or harness 4. Damaged component
Service Action:	1. Check voltages at Crush Protection Switch. Pin 21 and 22 should measure 10V. Pin 11 and 12 should measure 5V. 2. Disconnect Crush Protection Connector -C01_CPL from -C10_PH. Check resistance between Pin 22 and Pin 12. Value should be open Circuit.Check operation of switch by actuating the device. Check continuity from Crush Protection switch to Platform Bosch ECU connector, Terminals 47/58 and 36/58.

© 2026 JCB INDIA LTD

	3. Check for water damage at Crush Protection Connector, Interconnects - C22_PH / -C22_PHP and Platform Bosch ECU connectors 4. Visually inspect wiring harness, Switch and all connectors for any damage or for mis-seated components. Check connectors for bent or backed out terminals.  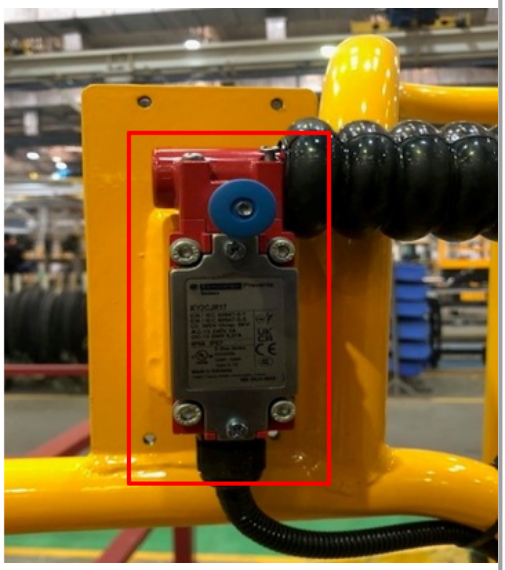 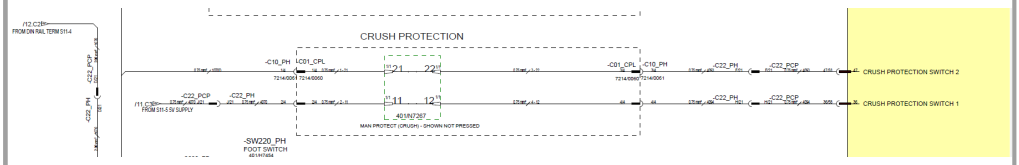

5.1.23 B1026-17

Error code:	B1026-17
ECU	Platform ECU
Description:	Crush Protection - Switch 1 Short Circuit to >5v
Component:	Crush Protection Switch 1
Vehicle reaction:	Detect failure mode and activate Crush protection functionality
Possible Cause:	1. A short circuit within the wiring harness 2. A short circuit within the harness connectors 3. Water damage/ingress within the harness connectors 4. Damaged component

© 2026 JCB INDIA LTD

Service Action:	1. Check voltages at Crush Protection Switch. Pin 21 and 22 should measure 10V. Pin 11 and 12 should measure 5V. 2. Disconnect Crush Protection Connector -C01_CPL from -C10_PH. Check resistance between Pin 22 and Pin 12. Value should be open Circuit.Check operation of switch by actuating the device. Check continuity from Crush Protection switch to Platform Bosch ECU connector, Terminals 47/58 and 36/58. 3. Check for water damage at Crush Protection Connector, Interconnects -C22_PH / -C22_PHP and platform Bosch ECU connectors 4. Visually inspect wiring harness, Switch and all connectors for any damage or for mis-seated components. Check connectors for bent or backed out terminals. 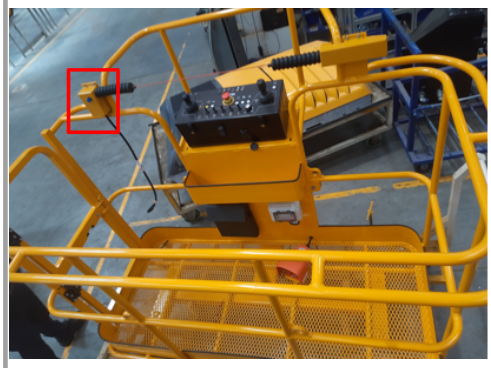   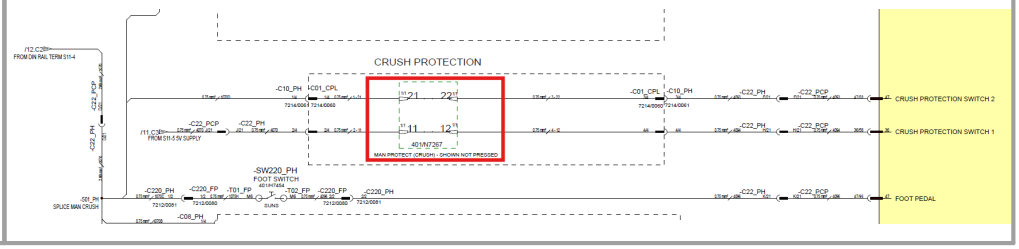

5.1.24 B1027-16

Error code:	**B1027-16**
ECU	Platform ECU
Description:	Crush Protection - Switch 1 Short Circuit to Low
Component:	Crush Protection Switch 1
Vehicle reaction:	Detect failure mode and activate Crush protection functionality
Possible Cause:	1. A short circuit within the wiring harness 2. A short circuit within the harness connectors 3. Water damage/ingress within the harness connectors 4. Damaged component

© 2026 JCB INDIA LTD

Service Action:	1. Check voltages at Crush Protection Switch. Pin 21 and 22 should measure 10V. Pin 11 and 12 should measure 5V. 2. Disconnect Crush Protection Connector -C01_CPL from -C10_PH. Check resistance between Pin 22 and Pin 12. Value should be open Circuit.Check operation of switch by actuating the device. Check continuity from Crush Protection switch to Platform Bosch ECU connector, Terminals 47/58 and 36/58. 3. Check for water damage at Crush Protection Connector, Interconnects -C22_PH / -C22_PHP and platform Bosch ECU connectors 4. Visually inspect wiring harness, Switch and all connectors for any damage or for mis-seated components. Check connectors for bent or backed out terminals. 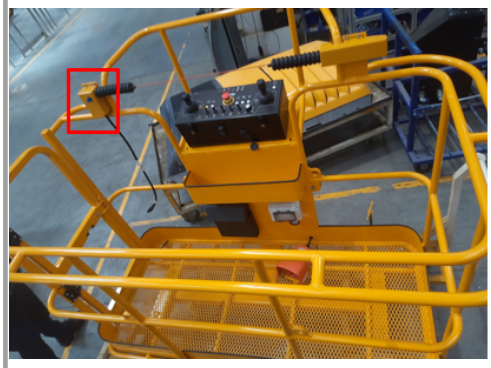   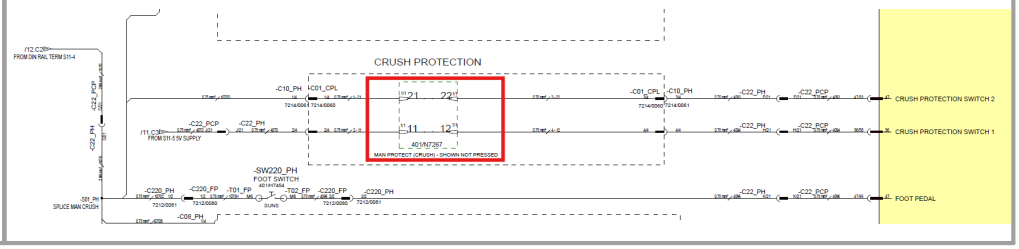

5.1.25 B1028-16

Error code:	**B1028-16**
ECU	Platform ECU
Description:	Crush Protection - Switch 2 Short Circuit to Low
Component:	Crush Protection Switch 2
Vehicle reaction:	Detect failure mode and activate Crush protection functionality
Possible Cause:	1. A short circuit within the wiring harness 2. A short circuit within the harness connectors 3. Water damage/ingress within the harness connectors 4. Damaged component

© 2026 JCB INDIA LTD

Service Action:	1. Check voltages at Crush Protection Switch. Pin 21 and 22 should measure 10V. Pin 11 and 12 should measure 5V. 2. Disconnect Crush Protection Connector -C01_CPL from -C10_PH. Check resistance between Pin 22 and Pin 12. Value should be open Circuit.Check operation of switch by actuating the device. Check continuity from Crush Protection switch to Platform Bosch ECU connector, Terminals 47/58 and 36/58. 3. Check for water damage at Crush Protection Connector, Interconnects -C22_PH / -C22_PHP and Platform Bosch ECU connectors 4. Visually inspect wiring harness, Switch and all connectors for any damage or for mis-seated components. Check connectors for bent or backed out terminals. 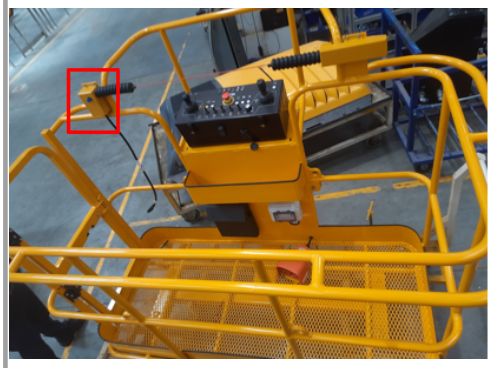   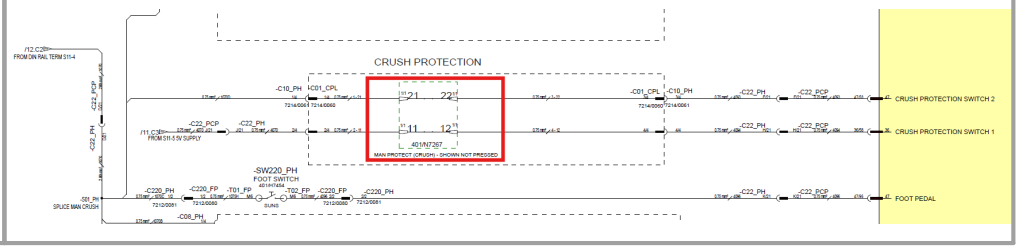

5.1.26 B1029-17

Error code:	**B1029-17**
ECU	Platform ECU
Description:	Crush Protection - Switch 2 Short Circuit to >10.5v
Component:	Crush Protection Switch 2
Vehicle reaction:	Detect failure mode and activate Crush protection functionality
Possible Cause:	1. A short circuit within the wiring harness 2. A short circuit within the harness connectors 3. Water damage/ingress within the harness connectors 4. Damaged component

© 2026 JCB INDIA LTD

Service Action:	1. Check voltages at Crush Protection Switch. Pin 21 and 22 should measure 10V. Pin 11 and 12 should measure 5V. 2. Disconnect Crush Protection Connector -C01_CPL from -C10_PH. Check resistance between Pin 22 and Pin 12. Value should be open Circuit.Check operation of switch by actuating the device. Check continuity from Crush Protection switch to Platform Bosch ECU connector, Terminals 47/58 and 36/58. 3. Check for water damage at Crush Protection Connector, Interconnects -C22_PH / -C22_PHP and Platform Bosch ECU connectors 4. Visually inspect wiring harness, Switch and all connectors for any damage or for mis-seated components. Check connectors for bent or backed out terminals. 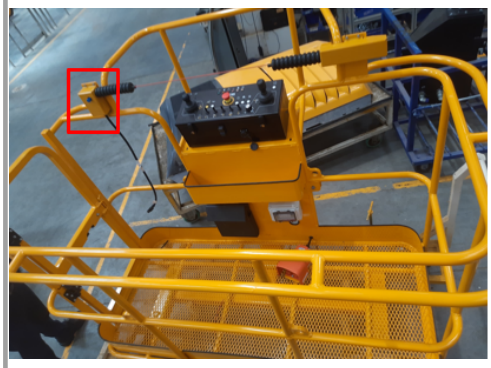   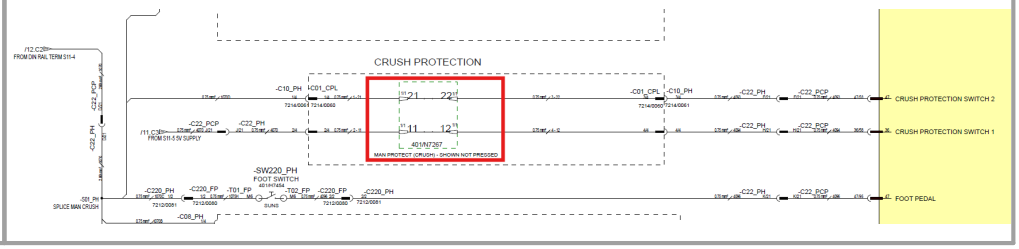

5.1.27 **B1030-17**

Error code:	**B1030-17**
ECU	Base ECU
Description:	FORWARD OR REVERSE Proportional Solenoid Valve High Side Short Circuit to High
Component:	Drive Solenoid
Vehicle reaction:	Detect failure mode with Safout method - Switch drive output (but not steer) to off (Brake comes ON automatically) Before Ignition ON, POST Fail (stuck in startup logic) and Generic output fault.

© 2026 JCB INDIA LTD

Possible Cause:	1. A short circuit within the wiring harness 2. A short circuit within the harness connectors 3. Water damage/ingress within the harness connectors 4. Damaged component
Service Action:	1. Check harness from Base Bosch ECU through to Transmission Pump connectors -C18_TH and -C19_TH. Disconnect connectors and test for short circuits with multi-meter. 2. Check condition of connectors at Base Bosch ECU and Transmission pump connectors 3. Check for water ingress at connectors including within ECU mounted connector and Solenoid mounted connectors. 4. Check harness for any visible damage such as abrasions and pinching. 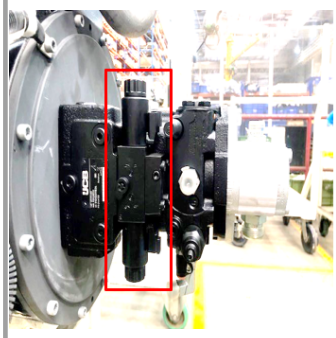 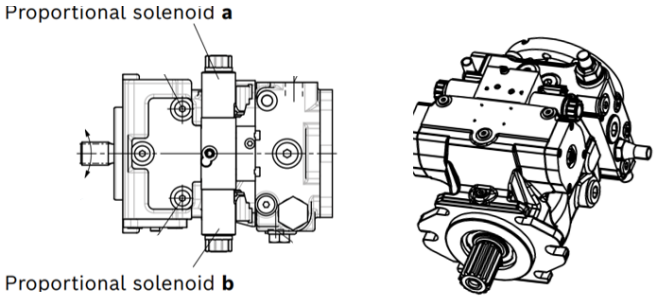 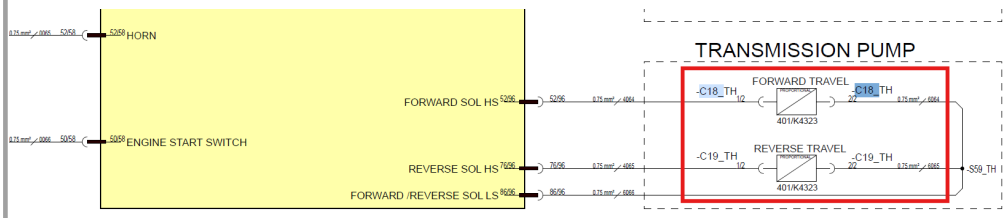

5.1.28 B1031-16

Error code:	**B1031-16**
ECU	Base ECU
Description:	FORWARD OR REVERSE Proportional Solenoid Valve High Side Short Circuit to Low
Component:	Drive Solenoid
Vehicle reaction:	Detect failure mode with Safout method - Switch drive output (but not steer) to off (Brake comes ON automatically)

© 2026 JCB INDIA LTD

Possible Cause:	1. A short circuit within the wiring harness 2. A short circuit to the chassis 3. A short circuit within the harness connectors 4. Water damage/ingress within the harness connectors 5. Damaged component
Service Action:	1. Check harness from Base Bosch ECU through to Transmission Pump connectors -C18_TH and -C19_TH. 2. Disconnect connectors and test for short circuits to GND with multi-meter. 3. Check condition of connectors at Base Bosch ECU and Transmission pump connectors 4. Check for water ingress at connectors including within ECU mounted connector and Solenoid mounted connectors. 5. Check harness for any visible damage such as abrasions and pinching. 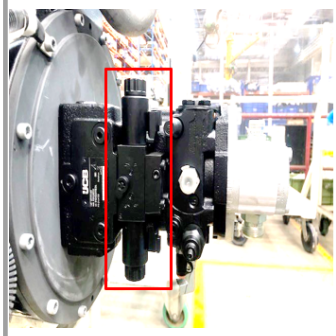 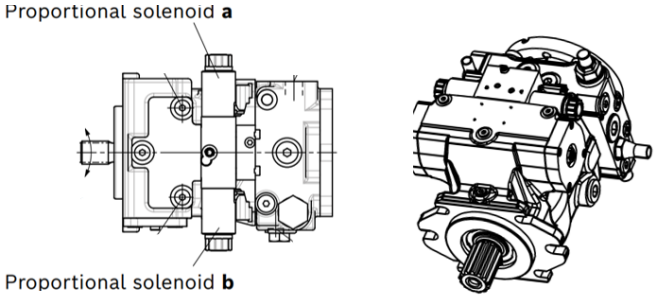 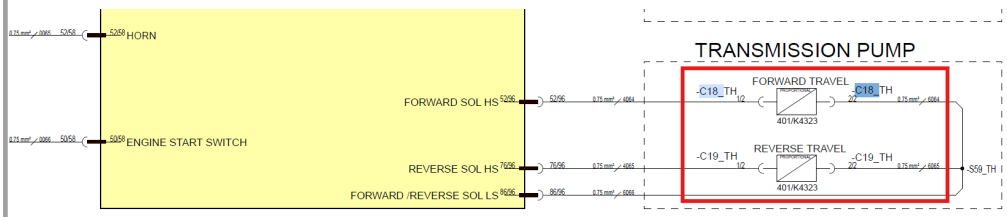

5.1.29 B1032-13

Error code:	**B1032-13**
ECU	Base ECU
Description:	FORWARD OR REVERSE Proportional Solenoid Valve High Side Open Circuit
Component:	Drive Solenoid
Vehicle reaction:	Detect failure mode with Safout method - Switch drive output (but not steer) to off (Brake comes ON automatically) Note:During operation , refer to FORWARD OR REVERSE Proportional Solenoid Valve Low Side Open Circuit Fault code

© 2026 JCB INDIA LTD

Possible Cause:	1. A poor connection or damaged terminal within the connector(s) 2. A damaged or broken wire within the wiring harness 3. Component is damaged
Service Action:	1. Check harness from Base Bosch ECU through to Transmission Pump connectors -C18_TH and -C19_TH. 2. Ensure connectors are fully seated. Check all terminals are present and not backed out inside connectors. Ensure wire is correctly terminated at terminals. Perform continuity tests on the harness. 3. check no damage to Base Bosch ECU connectors, Pump connectors or and visible damage to harness including abrasion and pinching

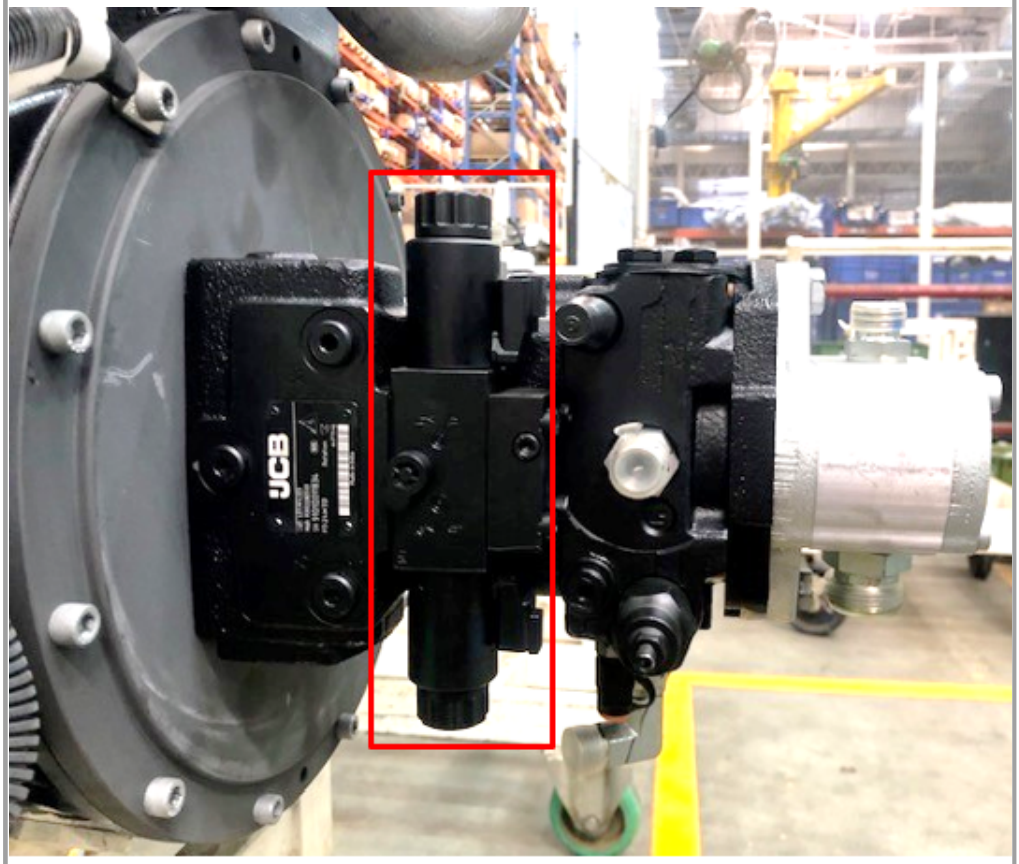

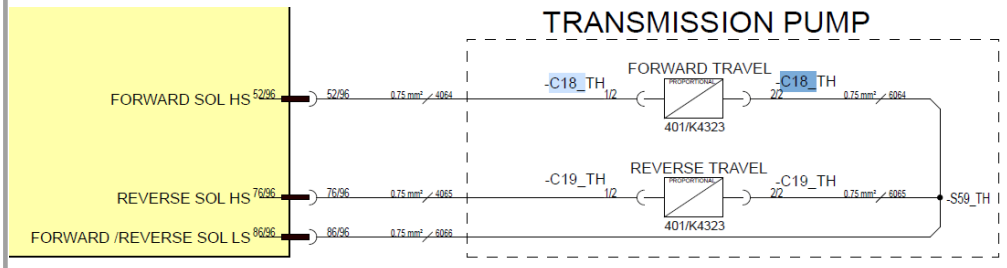

5.1.30 B1033-17

Error code:	**B1033-17**

© 2026 JCB INDIA LTD

ECU	Base ECU
Description :	FORWARD OR REVERSE Proportional Solenoid Valve Low Side Short Circuit to High
Component :	Drive Solenoid
Vehicle reaction:	Detect failure mode with Safout method - Switch drive output (but not steer) to off (Brake comes ON automatically) Before Ignition ON, POST Fail (stuck in startup logic) and Generic output fault.
Possible Cause:	1. A short circuit within the wiring harness 2. A short circuit within the harness connectors 3. Water damage/ingress within the harness connectors 4. Damaged component
Service Action:	1. Check harness from Base Bosch ECU through to Transmission Pump connectors -C18_TH and -C19_TH. Disconnect connectors and test for short circuits with multi-meter. 2. Check condition of connectors at Base Bosch ECU and TRansmission pump connectors 3. Check for water ingress at connectors including within ECU mounted connector and Solenoid mounted connectors. 4. Check harness for any visible damage such as abrasions and pinching. 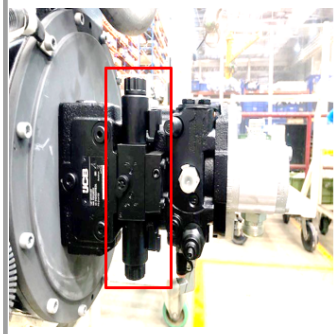 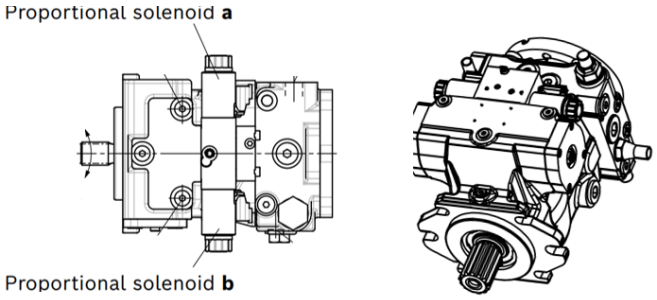 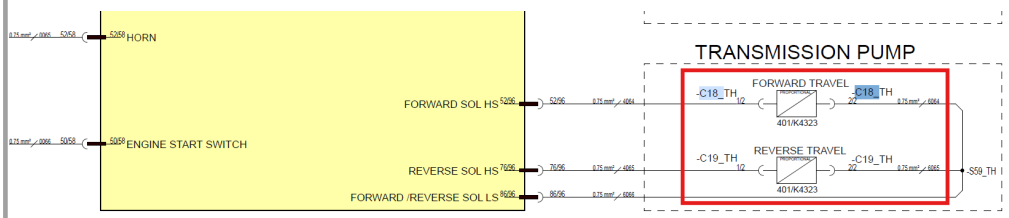

5.1.31 B1034-16

Error code:	**B1034-16**
ECU	Base ECU

© 2026 JCB INDIA LTD

Description:	FORWARD OR REVERSE Proportional Solenoid Valve Low Side Short Circuit to Low
Component:	Drive Solenoid
Vehicle reaction:	Detect failure mode with Safout method - Switch drive output (but not steer) to off (Brake comes ON automatically)
Possible Cause:	1. A short circuit within the wiring harness 2. A short circuit to the chassis 3. A short circuit within the harness connectors 4. Water damage/ingress within the harness connectors 5. Damaged component
Service Action:	1. Check harness from Base Bosch ECU through to Transmission Pump connectors -C18_TH and -C19_TH. Disconnect connectors and test for short circuits with multi-meter. 2. Check condition of connectors at Base Bosch ECU and Transmission pump connectors 3. Check for water ingress at connectors including within ECU mounted connector and Solenoid mounted connectors. 4. Check harness for any visible damage such as abrasions and pinching.

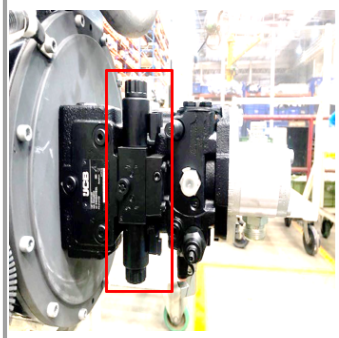

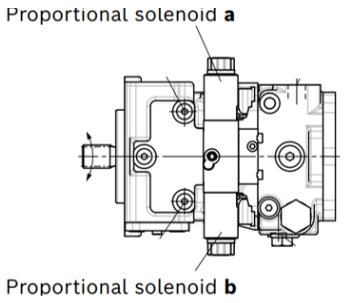

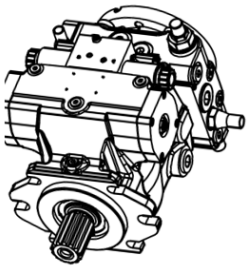

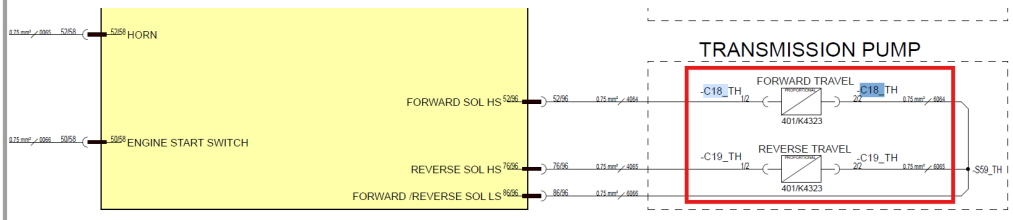

5.1.32 B1035-13

Error code:	**B1035-13**
ECU	Base ECU
Description:	FORWARD OR REVERSE Proportional Solenoid Valve Low Side Open Circuit

© 2026 JCB INDIA LTD

Component:	Drive Solenoid
Vehicle reaction:	Detect failure mode with Safe out method - Switch drive output (but not steer) to off (Brake comes ON automatically)
Possible Cause:	1. A poor connection or damaged terminal within the connector(s) 2. A damaged or broken wire within the wiring harness 3. Component is damaged

Service Action:	Inspect Harness Routing
	• Check the harness from Base Bosch ECU through to Transmission Pump connectors:
	  ○ C18_TH
	  ○ C19_TH
	• Ensure there are no cuts, pinches, or visible damage along the harness.
	
	Verify Connector Seating and Terminals
	• Confirm connectors are fully seated.
	• Check that all terminals are present and not backed out inside connectors.
	• Ensure wires are correctly terminated at terminals.
	• Perform continuity tests on the harness.
	
	Check for Physical Damage
	• Inspect Base Bosch ECU connectors, Pump connectors, and harness for:
	  ○ Abrasion
	  ○ Pinching
	  ○ Any visible damage.

© 2026 JCB INDIA LTD

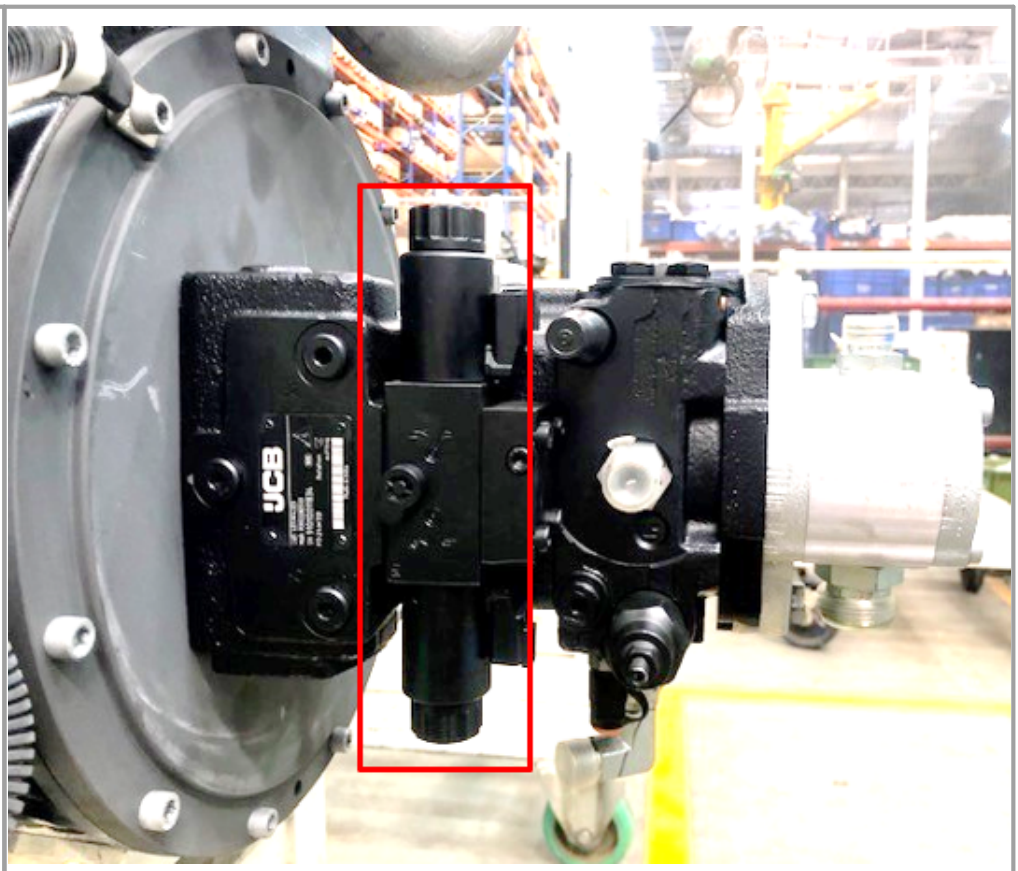

5.1.33 B1036-17

Error code:	B1036-17
ECU	Base ECU
Description:	Public proportional output solenoid short circuit to high (>10.5V)
Component:	Public proportional output solenoid
Vehicle reaction:	Public proportional solenoid will be switched off, this will effect:Articulated boom, steer, leveling, jib, platform rotate, telescopic boom.

© 2026 JCB INDIA LTD

Possible Cause:	1. Poor connection 2. Break in wiring 3. Water in connector 4. Broken pin or connector 5. Damage solenoid
Service Action:	1. Check resistance of the coil 5-10 ohms 2. Check wiring from ECU to the coil 3. Turn machine ignition on/off to clear code 4. Check wire on solenoid connector C11_TH Pin 1 and 2. 5. Check wire no. 4047 and 4058 for any loose connection, cut or any damage. 6. Check if valve is mechanically jammed 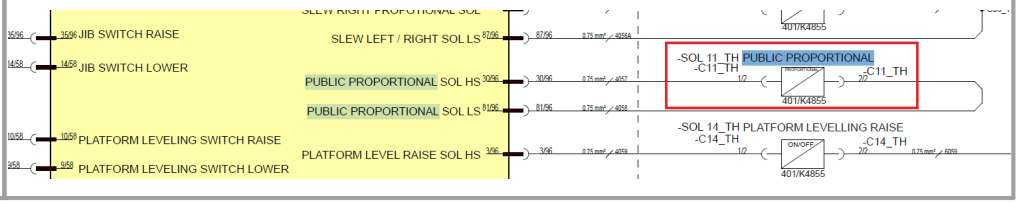

5.1.34 B1037-16

Error code:	**B1037-16**
ECU	Base ECU
Description:	Public proportional output solenoid short circuit to low.
Component:	Public proportional output solenoid
Vehicle reaction:	Public proportional solenoid will be switched off, this will effect:Articulated boom, steer, leveling, jib, platform rotate, telescopic boom.
Possible Cause:	1. Poor connection 2. Break in wiring 3. Water in connector 4. Broken pin or connector 5. Damage solenoid

© 2026 JCB INDIA LTD

Service Action:	1. Check resistance of the coil 5-10 ohms 2. Check wiring from ECU to the coil 3. Turn machine ignition on/off to clear code 4. Check wire on solenoid connector C11_TH Pin 1 and 2. 5. Check wire no. 4047 and 4058 for any loose connection, cut or any damage. 6. Check if valve is mechanically jammed 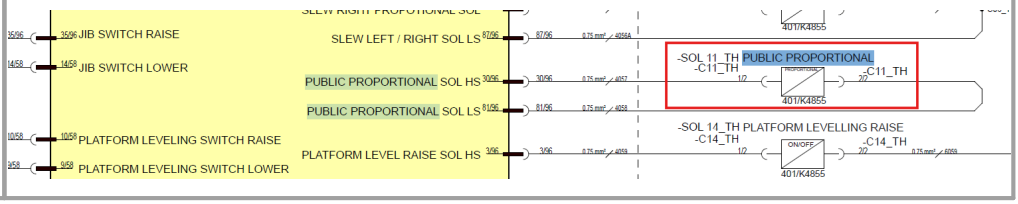

5.1.35 B1038-13

Error code:	**B1038-13**
ECU	Base ECU
Description:	PUBLIC Proportional Solenoid Valve High Side & Low Side Open Circuit
Component:	PUBLIC Proportional Solenoid Valve
Vehicle reaction:	Public proportional solenoid will be switched off, this will effect:Articulated boom, steer, leveling, jib, platform rotate, telescopic boom
Possible Cause:	1. Poor connection 2. Break in wiring 3. Water in connector 4. Broken pin or connector 5. Damage solenoid
Service Action:	Coil Resistance • Measure the resistance of the coil: ○ Expected range: 5–10 Ω. ○ If outside this range, replace the coil. Wiring from ECU to Coil

© 2026 JCB INDIA LTD

- Inspect wiring continuity from ECU to the coil.
- Check for:
  - Open circuits
  - Shorts to ground or power
  - Damaged insulation

Clear Fault Code

- Cycle machine ignition ON/OFF to clear any stored error codes.
- Recheck if the fault persists.

Solenoid Connector Check

- Inspect C11_TH connector:
  - Measure voltage at Pin 1 and Pin 2.
  - Confirm correct polarity and no short to power.

Wire Integrity

- Check Wire #4047 and #4058 for:
  - Loose connections
  - Cuts or abrasions
  - Corrosion at terminals

Mechanical Check

- Verify if the valve is mechanically jammed:
  - Remove and inspect for debris or physical obstruction.
  - Ensure smooth movement.

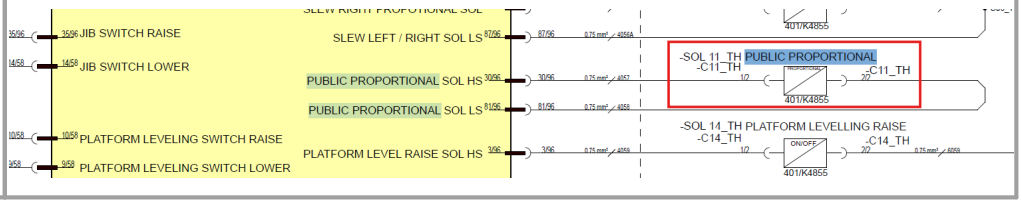

5.1.36 B1039-17

Error code:	B1039-17

© 2026 JCB INDIA LTD

ECU	Base ECU
Description:	PLATFORM LEVELING DIRECTIONAL Solenoid Valve Raise High Side Short Circuit to High OR Open Circuit
Component:	PLATFORM LEVELING DIRECTIONAL Solenoid Valve
Vehicle reaction:	Detect failure modes. Dont disable any output and dont ignore any input Note: Before Ignition ON, POST Fail (stuck in startup logic) and Generic output fault.
Possible Cause:	1. Poor connection 2. Break in wiring 3. Water in connector 4. Broken pin or connector 5. Damage solenoid
Service Action:	1. Check resistance of the coil 5-10 ohms 2. Check wiring from ECU to the coil wire no 4059 3. Check Ground wire 6059 4. Check wire on solenoid connector C14_TH Pin 1 and 2. 5. Check wire no. 4047 and 4058 for any loose connection, cut or any damage 6. Check Base ECU pin 3/96 for bent or loose connection. 7. Check if valve is mechanically jammed 8. Turn machine ignition on/off to clear code 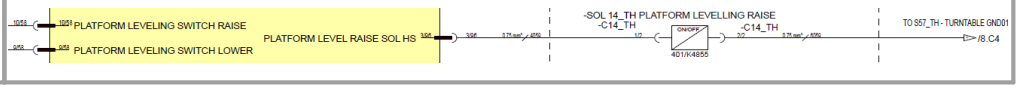

5.1.37 B1040-16

Error code:	**B1040-16**
ECU	Base ECU
Description:	PLATFORM LEVELING DIRECTIONAL Solenoid Valve Raise High Side Short Circuit to Low
Component:	PLATFORM LEVELING DIRECTIONAL Solenoid Valve Raise

© 2026 JCB INDIA LTD

Vehicle reaction:	Detect failure modes. Dont disable any output and dont ignore any input
Possible Cause:	1. Poor connection 2. Break in wiring 3. Water in connector 4. Broken pin or connector 5. Damage solenoid
Service Action:	1. Check resistance of the coil 5-10 ohms 2. Check wiring from ECU to the coil wire no 4059 3. Check Ground wire 6059 4. Check wire on solenoid connector C14_TH Pin 1 and 2. 5. Check Base ECU pin 3/96 for bent or loose connection. 6. Check if valve is mechanically jammed 7. Turn machine ignition on/off to clear code 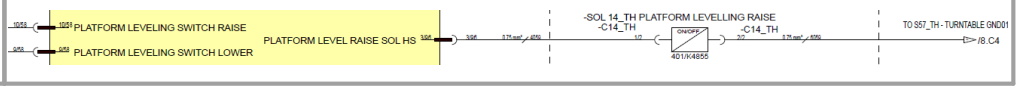

5.1.38 B1041-17

Error code:	**B1041-17**
ECU	Base ECU
Description:	PLATFORM LEVELING DIRECTIONAL Solenoid Valve Lower High Side Short Circuit to High OR Open Circuit
Component:	PLATFORM LEVELING DIRECTIONAL Solenoid Valve
Vehicle reaction:	Detect failure modes. Dont disable any output and dont ignore any input Note: Before Ignition ON, POST Fail (stuck in startup logic) and Generic output fault.
Possible Cause:	1. Poor connection 2. Break in wiring 3. Water in connector 4. Broken pin or connector 5. Damage solenoid

© 2026 JCB INDIA LTD

Service Action:	1. Check resistance of the coil 5-10 ohms 2. Check wiring from ECU to the coil wire no 4060 3. Check Ground wire 6060 4. Check wire on solenoid connector C15_TH Pin 1 and 2. 5. Check Base ECU pin 57/58 for bent or loose connection. 6. Check if valve is mechanically jammed 7. Turn machine ignition on/off to clear code 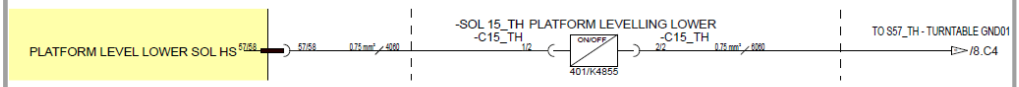

5.1.39 B1042-16

Error code:	**B1042-16**
ECU	Base ECU
Description:	PLATFORM LEVELING DIRECTIONAL Solenoid Valve Lower High Side Short Circuit to Low
Component:	PLATFORM LEVELING DIRECTIONAL Solenoid Valve
Vehicle reaction:	Detect failure modes. Dont disable any output and dont ignore any input
Possible Cause:	1. Poor connection 2. Break in wiring 3. Water in connector 4. Broken pin or connector 5. Damage solenoid
Service Action:	1. Check resistance of the coil 5-10 ohms 2. Check wiring from ECU to the coil wire no 4060 3. Check Ground wire 6060 4. Check wire on solenoid connector C15_TH Pin 1 and 2. 5. Check Base ECU pin 57/58 for bent or loose connection. 6. Check if valve is mechanically jammed 7. Turn machine ignition on/off to clear code

© 2026 JCB INDIA LTD

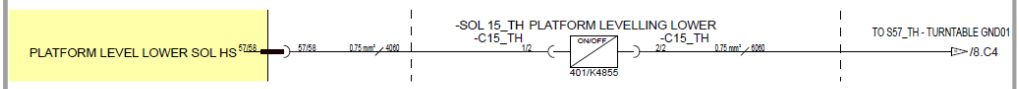

5.1.40 B1043-17

Error code:	B1043-17
ECU	Base ECU
Description:	OSCILLATING AXLE Solenoid Valve High Side Short Circuit to High
Component:	Oscillating Axle Solenoid
Vehicle reaction:	Detect failure mode with Safout method - Switch Axle Lock output to off; Before Ignition ON, POST Fail (stuck in startup logic) and Generic output fault
Possible Cause:	1. A short circuit within the wiring harness 2. A short circuit within the harness connectors 3. Water damage/ingress within the harness connectors 4. Damaged component
Service Action:	1. Check harness from Base Bosch ECU through interconnect -C24_TH / -C24_TH and through to -C02_CH (Axle Lock Solenoid connector). Disconnect connectors and check for short circuit to high (12V) 2. Check condition of all connectors, especially for bent pins and shorts within the connectors. 3. Check for any water ingress inside the connector housings, ECU built in connector and Solenoid connector. 4. check harness for damage, especially abrasions and pinching and check all connectors, solenoid valve and ECU for any visual defects.

© 2026 JCB INDIA LTD

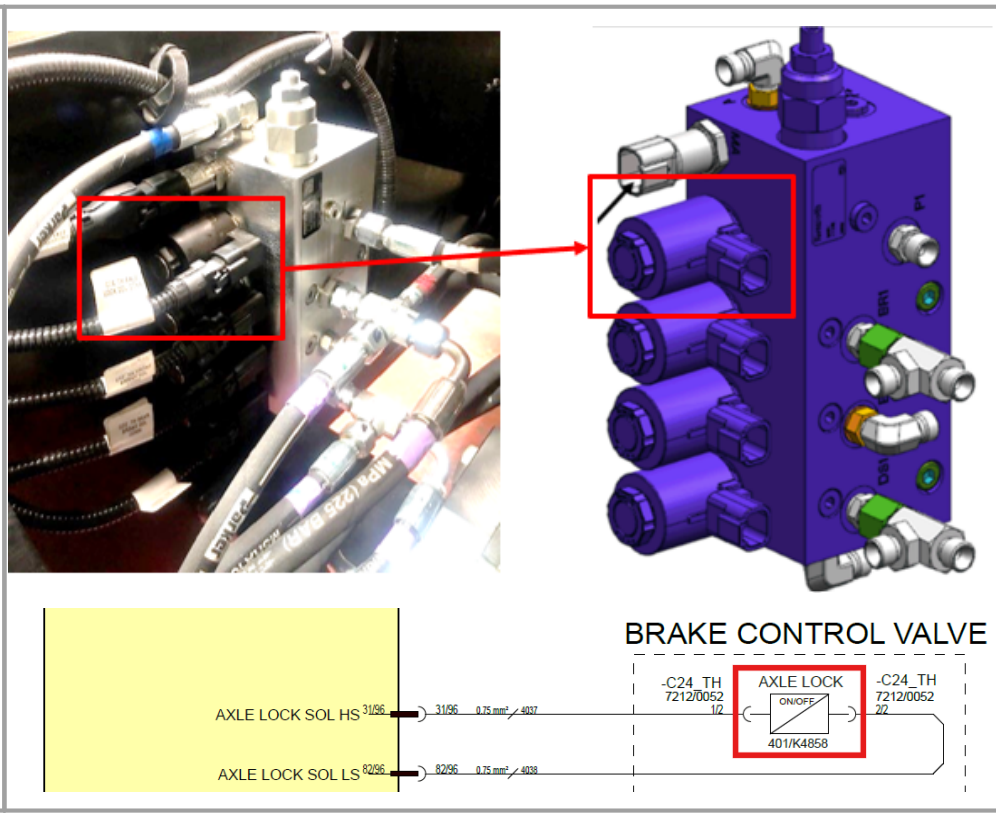

5.1.41 B1044-16

Error code:	B1044-16
ECU	Base ECU
Description:	OSCILLATING AXLE Solenoid Valve High Side Short Circuit to Low
Component:	Oscillating Axle Solenoid
Vehicle reaction:	Detect failure mode with Safout method - Switch Axle Lock output to off;
Possible Cause:	1. A short circuit within the wiring harness 2. A short circuit to the chassis 3. A short circuit within the harness connectors 4. Water damage/ingress within the harness connectors 5. Damaged component
Service Action:	1. Check harness from Base Bosch ECU through interconnect -C24_TH / -C24_TH and through to -C02_CH (Axle Lock Solenoid connector). 2. Disconnect connectors and check for short circuit to GND 3. Check condition of all connectors, especially for bent pins and shorts within the connectors.

© 2026 JCB INDIA LTD

	4. Check for any water ingress inside the connector housings, ECU built in connector and Solenoid connector. 5. check harness for damage, especially abrasions and pinching and check all connectors, solenoid valve and ECU for any visual defects. 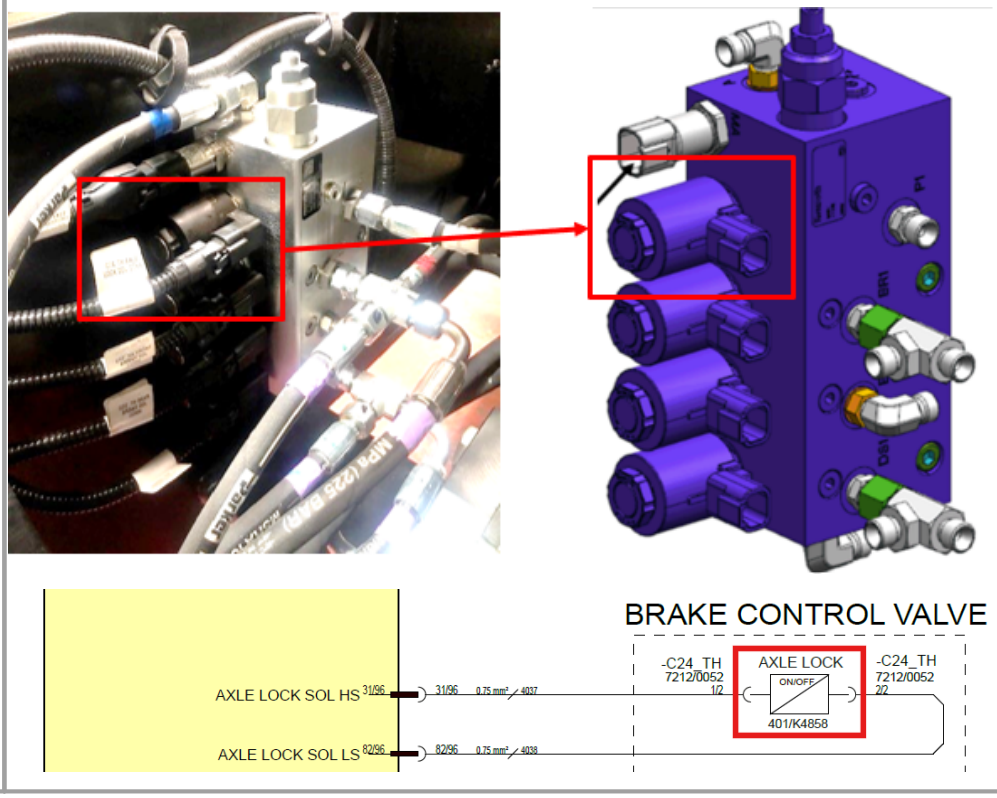

5.1.42 B1045-13

Error code:	B1045-13
ECU	Base ECU
Description :	OSCILLATING AXLE Solenoid Valve High Side & Low Side Open Circuit
Component :	Oscillating Axle Solenoid
Vehicle reaction:	Detect failure mode with Safe out method - Switch Axle Lock output to off;
Possible Cause:	1. A poor connection or damaged terminal within the connector(s) 2. A damaged or broken wire within the wiring harness 3. Component is damaged
Service Action:	1. Check harness from Base Bosch ECU through to Brake Control Valve -C24_TH and -C24_TH(Wire 4037 and 4038).

© 2026 JCB INDIA LTD

	2. Ensure connectors are fully seated. Check all terminals are present and not backed out inside connectors. Ensure wire is correctly terminated at terminals. Perform continuity tests on the harness. 3. check no damage to Base Bosch ECU connectors, Brake Control Valve connectors or and visible damage to harness including abrasion and pinching 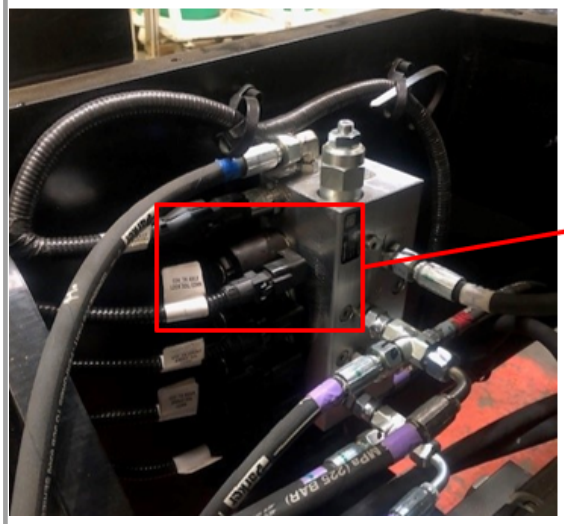 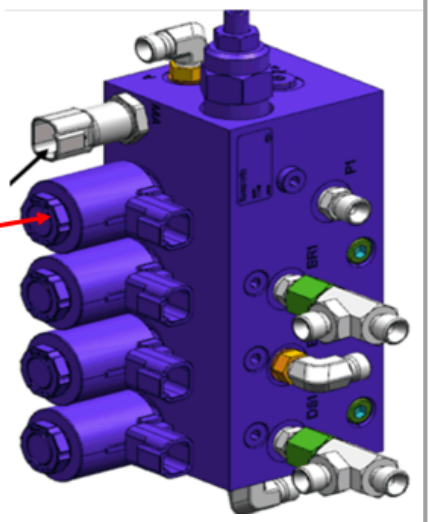 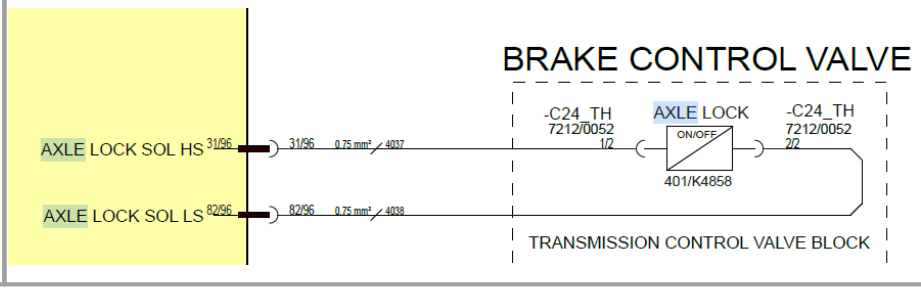

5.1.43 B1046-17

Error code:	B1046-17
ECU	Base ECU
Description:	HIGH TORQUE/LOW SPEED Solenoid Valve Short Circuit to High or Open Circuit
Component:	High Torque Solenoid
Vehicle reaction:	Detect failure mode. Disable High torque solenoid
Possible Cause:	1. A short circuit within the wiring harness 2. A short circuit within the harness connectors 3. Water damage/ingress within the harness connectors 4. Damaged component

© 2026 JCB INDIA LTD

Service Action:	1. Check connector -C23_TH at High Torque Solenoid, Ensure it is seated firmly. Check Interconnect -C23_TH / -C23_TH, terminal 5/12. Check Terminal at Base Bosch ECU Connector, terminal 42/58. 2. Inspect wiring from ECU to High Torque Solenoid connector. Check Continuity from -C23_TH pin 1 to ECU Connector 42/58. Check continuity from -C23_TH Pin 2 to GND. 3. Check all connectors for water ingress 4. Check harness especially for abrasions and pinching. Check condition of Connectors, checking especially for backed out or bent pins. 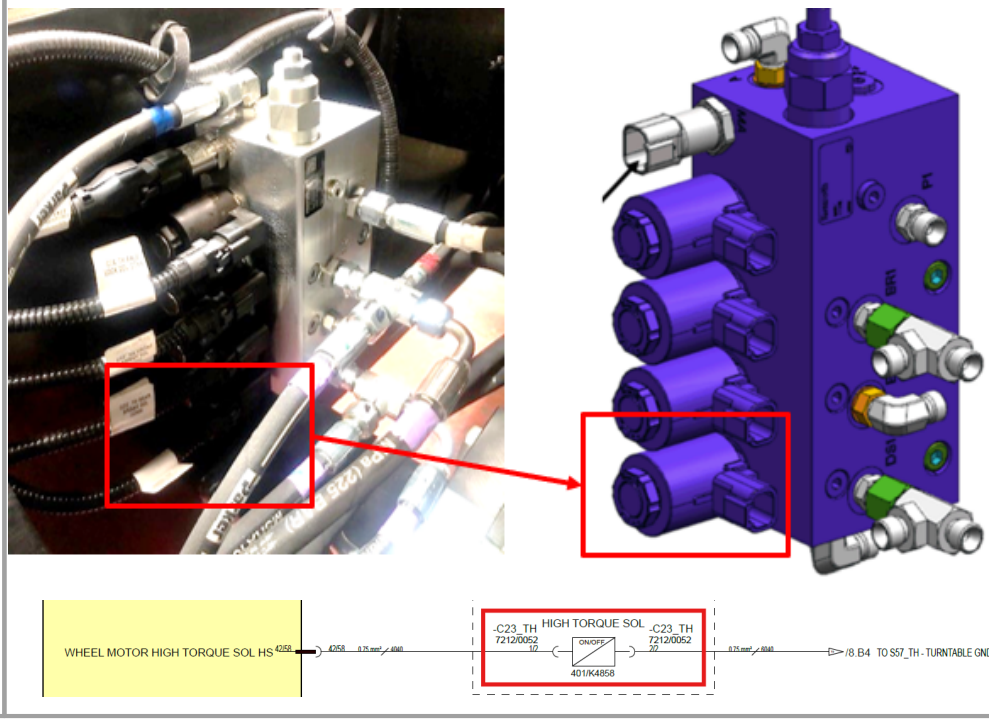

5.1.44 B1047-16

Error code:	**B1047-16**
ECU	Base ECU
Description:	HIGH TORQUE/LOW SPEED Solenoid Valve Short Circuit to Low
Component:	High Torque Solenoid
Vehicle reaction:	Detect failure mode. Disable High torque solenoid
Possible Cause:	1. A short circuit within the wiring harness 2. A short circuit to the chassis 3. A short circuit within the harness connectors

© 2026 JCB INDIA LTD

	4. Water damage/ingress within the harness connectors 5. Damaged component
Service Action:	1. Check connector -C23_TH at High Torque Solenoid, Ensure it is seated firmly. Check Interconnect -C23_TH / -C23_TH, terminal 5/12. Check Terminal at Base Bosch ECU Connector, terminal 42/58. 2. With Solenoid connector disconnected, Measure resistance from -C23_TH Pin 1 to Pin 2. This should be open circuit. 3. Inspect wiring from ECU to High Torque Solenoid connector. Check Continuity from -C23_TH pin 1 to ECU Connector 42/58. Check continuity from -C23_TH Pin 2 to GND. 4. Check all connectors for water ingress 5. Check harness especially for abrasions and pinching. Check condition of Connectors, checking especially for backed out or bent pins. 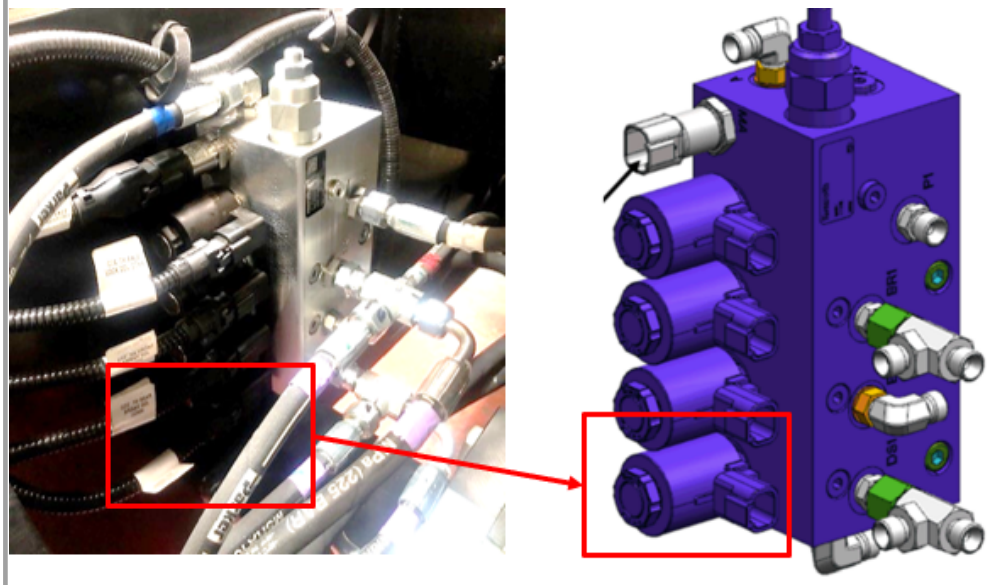

5.1.45 B1048-17

Error code:	**B1048-17**
ECU	Base ECU
Description:	FRONT BRAKE Solenoid Valve Short Circuit to High or Open Circuit

© 2026 JCB INDIA LTD

Component :	Front Brakes Solenoid
Vehicle reaction:	Detect failure modes. Dont disable any output and dont ignore any input
Possible Cause:	1. A short circuit within the wiring harness 2. A short circuit within the harness connectors 3. Water damage/ingress within the harness connectors 4. Damaged component
Service Action:	1. Check connector -C12_TH at Front Brake Solenoid, Ensure it is seated firmly. Check Interconnect -C12_TH / -C12_TH, terminal 4/12. Check Terminal at Base Bosch ECU Connector, terminal 26/96. 2. Inspect wiring from ECU to Front Brake Solenoid connector. Check Continuity from -C12 pin 1 to ECU Connector 26/96. Check continuity from -C12_CH Pin 2 to GND. 3. Check all connectors for water ingress 4. Check harness especially for abrasions and pinching. Check condition of Connectors, checking especially for backed out or bent pins. 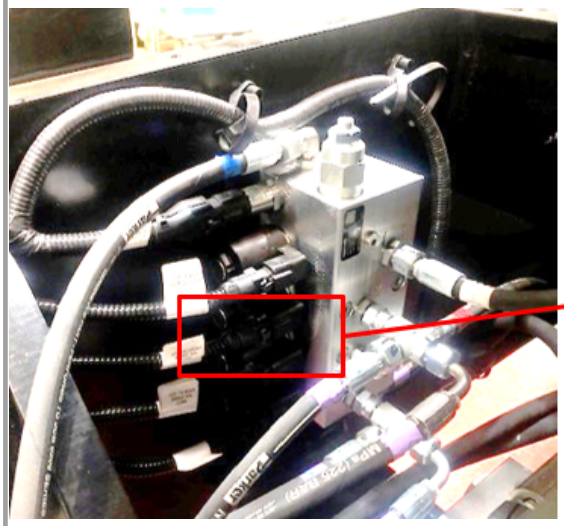 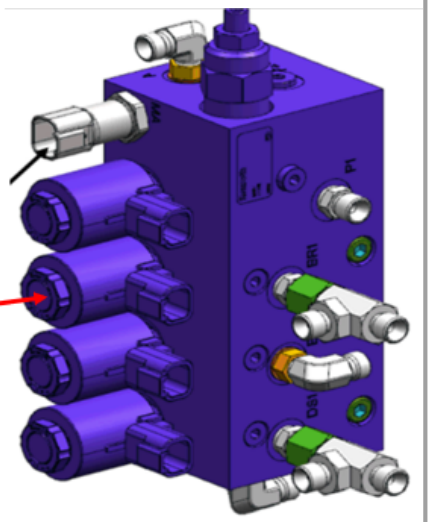 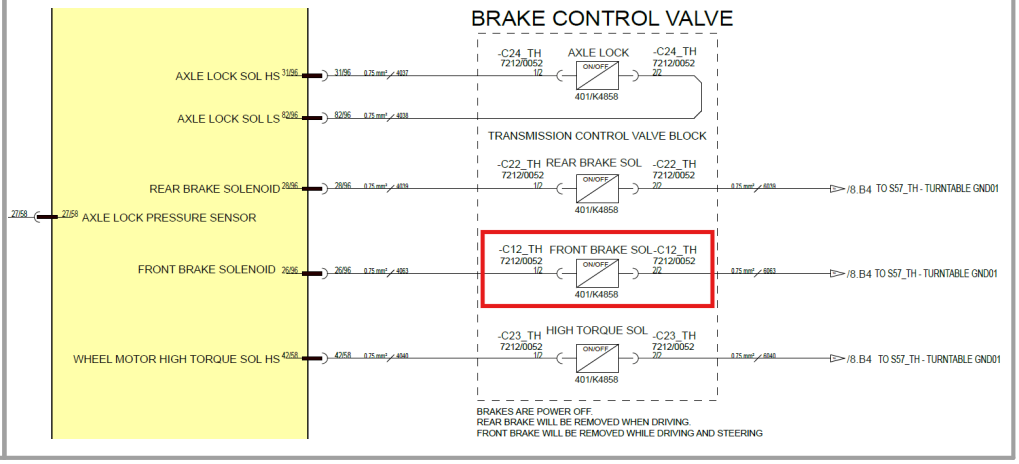

© 2026 JCB INDIA LTD

5.1.46 B1049-16

Error code:	B1049-16
ECU	Base ECU
Description:	FRONT BRAKE Solenoid Valve Raise Short Circuit to Low
Component:	Front Brakes Solenoid
Vehicle reaction:	Detect failure modes. Dont disable any output and dont ignore any input
Possible Cause:	1. A short circuit within the wiring harness 2. A short circuit to the chassis 3. A short circuit within the harness connectors 4. Water damage/ingress within the harness connectors 5. Damaged component
Service Action:	1. Check connector -C12_TH at Front Brake Solenoid, Ensure it is seated firmly. Check Interconnect -C12_TH / -C12_TH, terminal 4/12. Check Terminal at Base Bosch ECU Connector, terminal 26/96. 2. With Solenoid connector disconnected, Measure resistance from -C12_TH Pin 1 to Pin 2. This should be open circuit. 3. Inspect wiring from ECU to Front Brake Solenoid connector. Check Continuity from -C12_TH pin 1 to ECU Connector 26/96. Check continuity from -C12_TH Pin 2 to GND. 4. Check all connectors for water ingress 5. Check harness especially for abrasions and pinching. Check condition of Connectors, checking especially for backed out or bent pins. 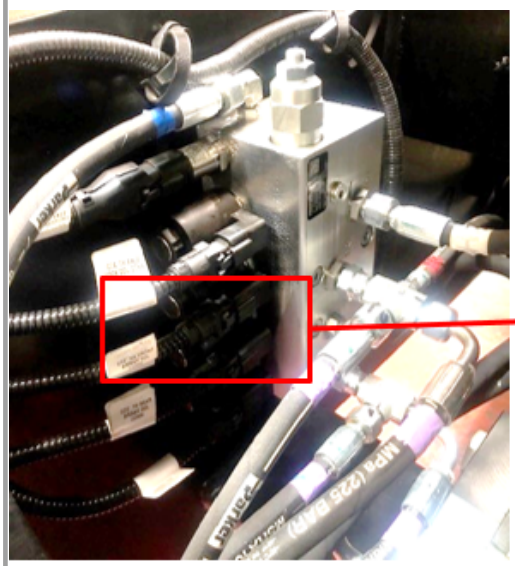 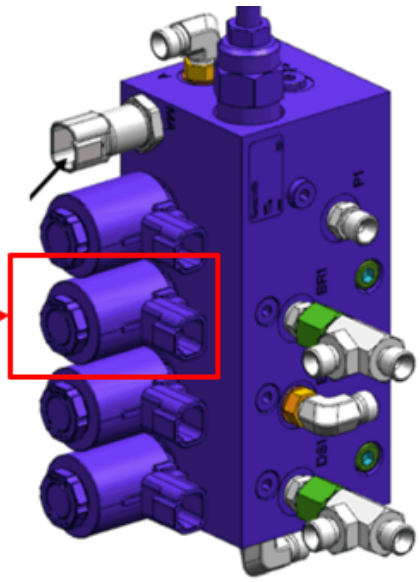

© 2026 JCB INDIA LTD

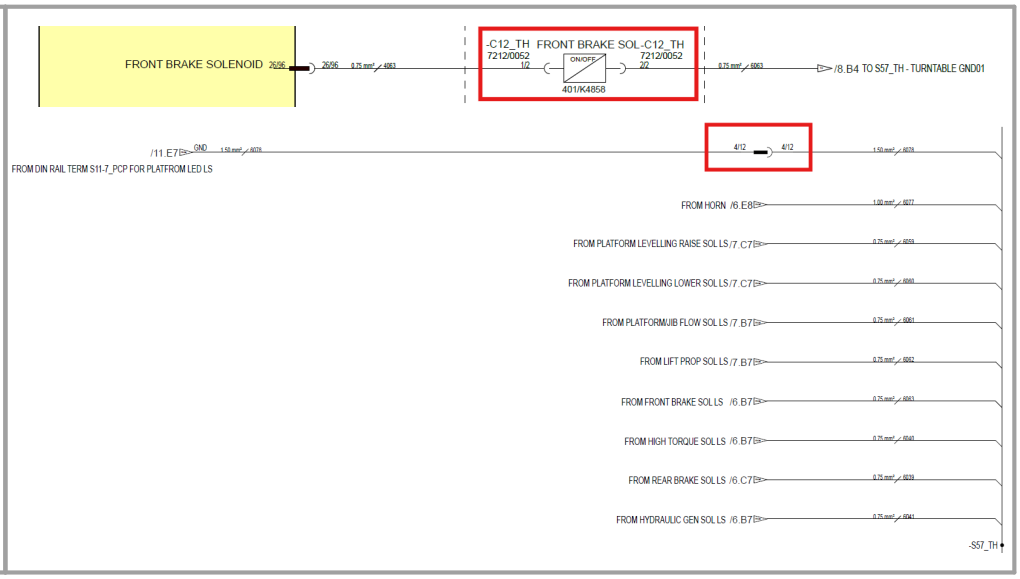

5.1.47 B1050-17

Error code:	B1050-17
ECU	Base ECU
Description:	Engine Start/Stop - Base Engine Start/Stop Button Short Circuit to High.
Component:	Engine Start/Stop Button
Vehicle reaction:	Detect failure mode; Ignore input (switch off engine)
Possible Cause:	1. A short circuit within the wiring harness 2. A short circuit within the harness connectors 3. Water damage/ingress within the harness connectors 4. Damaged component
Service Action:	1. Inspect Engine Start Switch -SW105_TCP. Inspect wiring to Switch. With switch unpressed - Pin 1 should measure +10V, Pin 2 should measure 0V. Check wire #0066 from switch to interconnects -C50_TCP pin 21/31, -C50_TH Pin 21/31 and through to the Base Bosch ECU pin 50/58. 2. Check Interconnect terminals and Bosch ECU terminals for damage or bent pins. Check wire connections to terminals. 3. Check all connectors for water ingress. 4. Check harness especially for abrasions and pinching. Check condition of connectors, checking especially for backed out or bent pins.

© 2026 JCB INDIA LTD





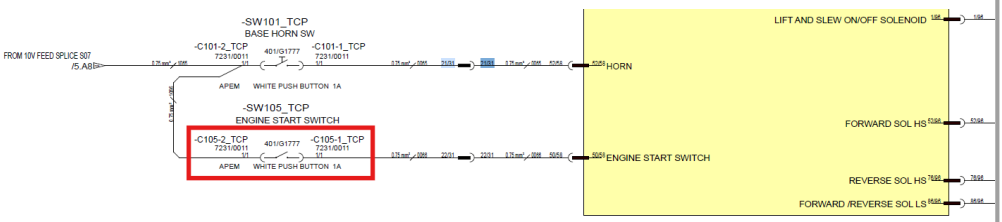

5.1.48 B1051-16

Error code:	B1051-16
ECU	Base ECU
Description:	Engine Start/Stop - Base Engine Start/Stop Button Short Circuit to Low.
Component:	Engine Start/Stop Button
Vehicle reaction:	Detect failure mode; Ignore input (switch off engine)
Possible Cause:	1. A short circuit within the wiring harness 2. A short circuit to the chassis 3. A short circuit within the harness connectors 4. Water damage/ingress within the harness connectors 5. Damaged component

© 2026 JCB INDIA LTD

Service Action:	1. Inspect Engine Start Switch -SW105_TCP. Inspect wiring to Switch. With switch unpressed - Pin 1 should measure +10V, Pin 2 should measure 0V. When pressed, Pin 2 should measure +10V. Check wire #0066 from switch to interconnects -C50_TCP pin 21/31, -C50_TH Pin 21/31 and through to the Base Bosch ECU pin 50/58. 2. Check wire #0066 is not shorted to GND 3. Check Interconnect terminals and Bosch ECU terminals for damage or bent pins. Check wire connections to terminals. 4. Check all connectors for water ingress. 5. Check harness especially for abrasions and pinching. Check condition of connectors, checking especially for backed out or bent pins.   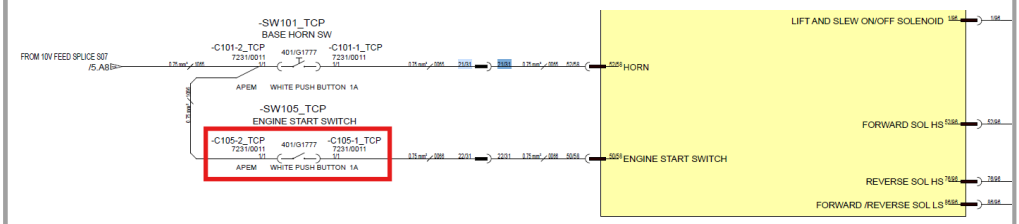

5.1.49 B1052-24

Error code:	**B1052-24**
ECU	Base ECU
Description:	Engine Start/Stop - Base Engine Start/Stop Button Stuck for >10s.
Component:	Engine Start/Stop Button

© 2026 JCB INDIA LTD

Vehicle reaction:	Detect failure mode; Ignore input (switch off engine)
Possible Cause:	1. Button failure / Damage 2. Short circuit within the harness 3. Water damage/ingress within the harness connectors 4. Damaged component
Service Action:	1. Disconnect connectors -C105-1_TCP and -C105-2_TCP from the Engine Start Switch -SW105_TCP. Use a multimeter to test the operation of the switch. 2. Check wire #0066 is not shorted to +10V. Check wire #0066 from switch to interconnects -C50_TCP pin 22/31, -C50_TH Pin 22/31 and through to the Base Bosch ECU pin 50/58. 3. Check all connectors for water ingress. 4. Check harness especially for abrasions and pinching. Check condition of connectors, checking especially for backed out or bent pins  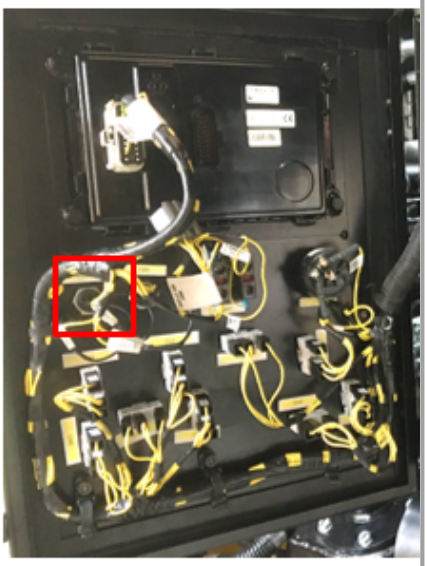 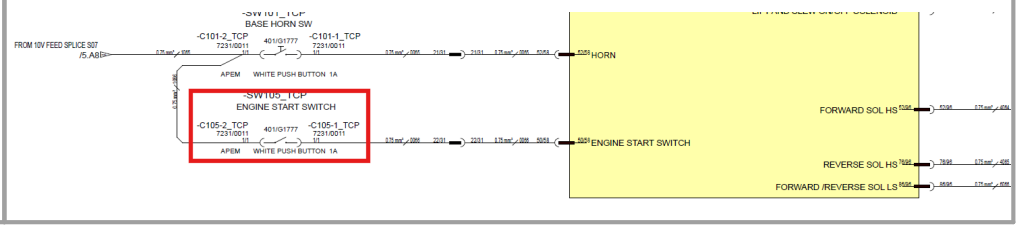

5.1.50 B1053-17

Error code:	**B1053-17**

© 2026 JCB INDIA LTD

ECU	Platform ECU
Description:	Platform 10v Output - Foot Pedal Short Circuit to High
Component:	Foot Pedal
Vehicle reaction:	Before operation: Detect fault and ignore the input (allow base operation) After operation: Refer to 10V System Short Circuit Fault reaction
Possible Cause:	1. A short circuit within the wiring harness 2. A short circuit within the harness connectors 3. Water damage/ingress within the harness connectors 4. Damaged component
Service Action:	1. Disconnect the foot switch connector from the platform harness connector -C220_PH. Measure voltage at -C220_PH Pin 2. Voltage should read 2.5 - 3.0V. If voltage is above 10V then there is a short to High (12VDC) in wire #4096. Check wiring through interconnects-C22_PH / -C22_PCP pin K back to the Platform ECU pin 47/96. 2. Check no shorts exist within the Foot switch connector, Interconnects and Platform ECU Connector. Check ECU for bent pins. 3. Check no water ingress in any of the connectors. 4. check operation of the switch pedal. Check all connectors and harness for visible damage, especially abrasions and pinching.  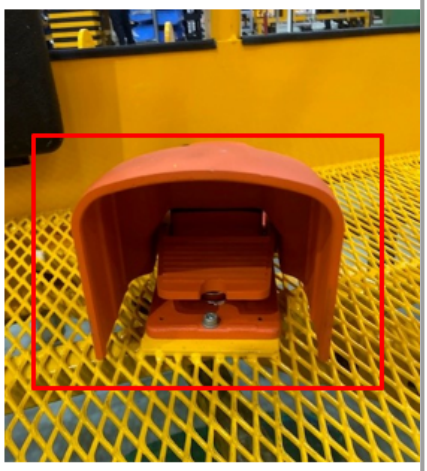

© 2026 JCB INDIA LTD

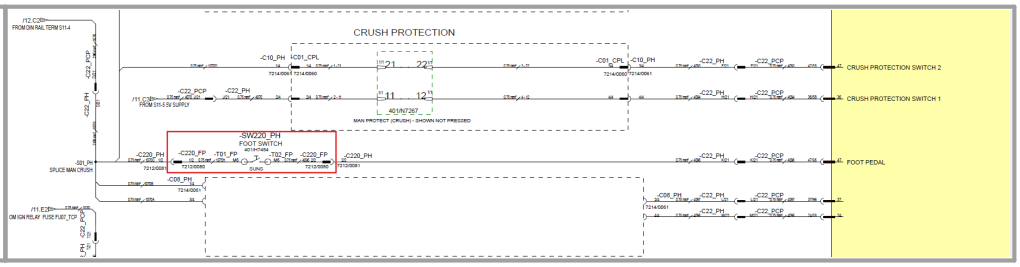

5.1.51 B1054-16

Error code:	B1054-16
ECU	Platform ECU
Description:	Platform 10v Output - Foot Pedal Short Circuit to Low
Component:	Foot Pedal
Vehicle reaction:	Before operation: Detect fault and ignore the input (allow base operation) After operation: Refer to 10V System Short Circuit Fault reaction
Possible Cause:	1. A short circuit within the wiring harness 2. A short circuit to the chassis 3. A short circuit within the harness connectors 4. Water damage/ingress within the harness connectors 5. Damaged component
Service Action:	1. Disconnect the foot switch connector from the platform harness connector -C220_PH. Measure voltage at -C220_PH Pin 2. Voltage should read 2.5 - 3.0V. If voltage is 0V (or close to 0V compared to 2.5V) then there is a short to GND in wire #4096. Check wiring through interconnects-C22_PH / -C22_PCP pin K back to the Platform ECU pin 47/96. 2. Check no shorts exist within the Foot switch connector, Interconnects and Platform ECU Connector. Check ECU for bent pins. 3. Check no water ingress in any of the connectors. 4. check operation of the switch pedal, ensuring no short exists between the foot switch connector terminals and GND. Check all connectors and harness for visible damage, especially abrasions and pinching.

© 2026 JCB INDIA LTD



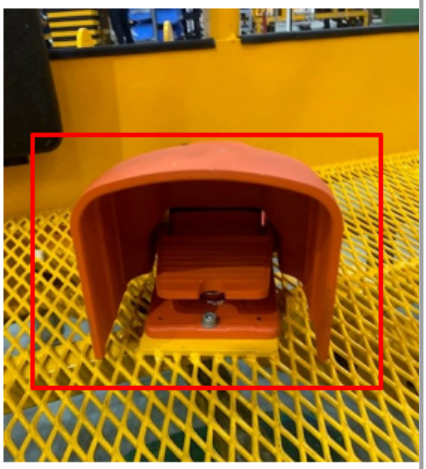

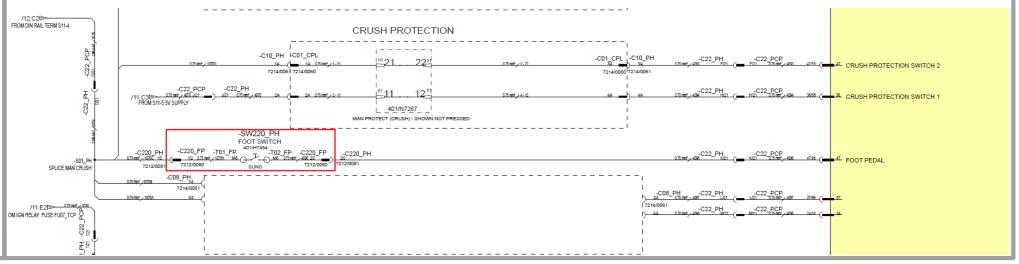

5.1.52 B1055-17

Error code:	B1055-17
ECU	Platform ECU
Description:	Aux Pump Switch - Unpressed - Short Circuit to High
Component:	Platform Aux Switch
Vehicle reaction:	Detect failure mode; Ignore input
Possible Cause:	1. A short circuit within the wiring harness 2. A short circuit within the harness connectors 3. Water damage/ingress within the harness connectors 4. Damaged component
Service Action:	1. Check switch Aux Pump Switch -SW209_PCP. Check Wire #0088 from Aux Switch connector -C209-2_PCP to Platform Bosch ECU Pin 43/96. Voltage should be +10V 2. Check Voltage a Aux Pump Switch Pin 2 at -C209-2_PCP. This should be +10V 3. Check Operation of switch

© 2026 JCB INDIA LTD

	4. Check all connectors for water ingress. 5 Check harness especially for abrasions and pinching. Check condition of connectors, checking especially for backed out or bent pins  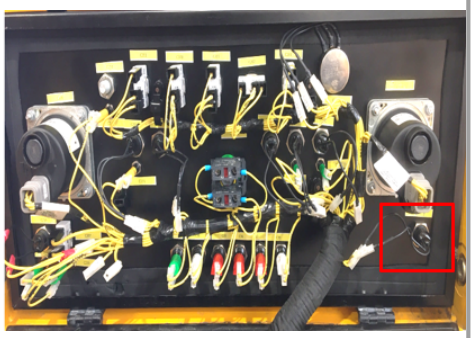 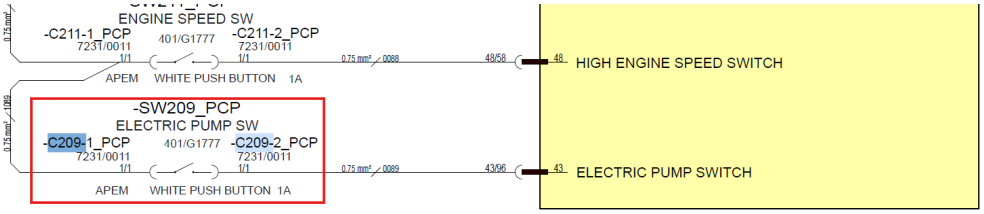

5.1.53 B1056-16

Error code:	B1056-16
ECU	Platform ECU
Description:	Aux Pump Switch - Unpressed - Short Circuit to Low
Component:	Platform Aux Switch
Vehicle reaction:	Detect failure mode; Ignore input
Possible Cause:	1. A short circuit within the wiring harness 2. A short circuit to the chassis 3. A short circuit within the harness connectors 4. Water damage/ingress within the harness connectors 5. Damaged component
Service Action:	1. Check switch Aux Pump Switch -SW209_PCP. Check Wire #0089 from Aux Switch connector -C209-3_PCP to Platform Bosch ECU Pin 49/96. Voltage should be +0V 2. Check Voltage a Aux Pump Switch Pin 2 at -C209-2_PCP. This should be +10V 3. Check Operation of switch 4. Check all connectors for water ingress. 5. Check harness especially for abrasions and pinching. Check condition of connectors, checking especially for backed out or bent pins

© 2026 JCB INDIA LTD



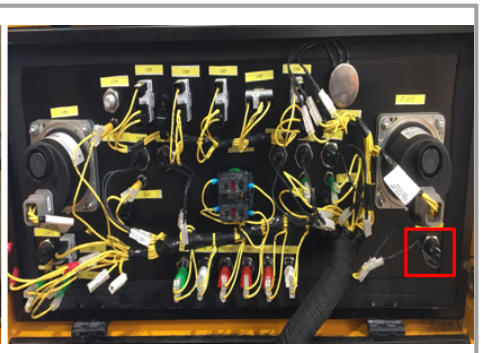

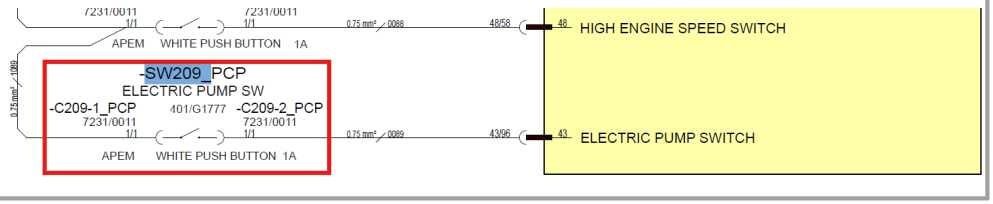

5.1.54 B1058-17

Error code:	B1058-17
ECU	Base ECU
Description:	Override switch pressed short circuit to high
Component:	Override switch
Vehicle reaction:	Input will be ignored
Possible Cause:	1. A short circuit within the wiring harness 2. A short circuit within the harness connectors 3. Water damage/ingress within the harness connectors 4. Damaged component
Service Action:	1. Check wiring between Override Switch and Base Bosch ECU for Voltage greater than 10.5 volts. Check interconnect connector. Check wiring and diode between override switch and e-stop switch. 2. Disconnect connector to Bosch ECU, check continuity between override switch terminals -C200-3 & -C200-1. This should be 'Open Circuit'. Investigate if testing does not concur. 3. Check connectors are dry and free of any debris. Check for damaged pins on the Bosch connectors. 4. Check operation of Override Switch.

© 2026 JCB INDIA LTD

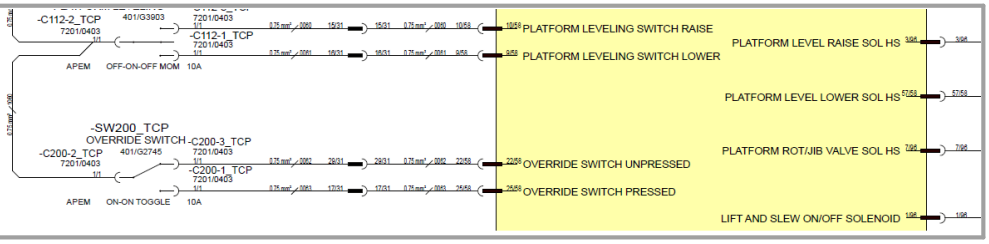

5.1.55 B1059-16

Error code:	B1059-16
ECU	Base ECU
Description:	E-Stop & Base Override - Override Switch Pressed Short Circuit to Low
Component:	Base Override Switch
Vehicle reaction:	Detect failure mode; Ignore input Default to Override unpressed state
Possible Cause:	1. A short circuit within the wiring harness 2. A short circuit to the chassis 3. A short circuit within the harness connectors 4. Water damage/ingress within the harness connectors 5. Damaged component
Service Action:	1. Check wiring between Override Switch and Base Bosch ECU. Check interconnect connector. Check wiring and diode between override switch and e-stop switch. 2. Check the wiring has not been shorted to the chassis of the vehicle (caused perhaps by pinching or abrasion). 3. Disconnect connector to Bosch ECU, check continuity between override switch terminals -C200-3 & -C200-1. This should be 'Open Circuit'. Investigate if testing does not concur. 4. Check connectors are dry and free of any debris. Check for damaged pins on the Bosch connectors. 5. Check operation of Override Switch. Check for any physical damage to the switch, connectors or harness components.

© 2026 JCB INDIA LTD



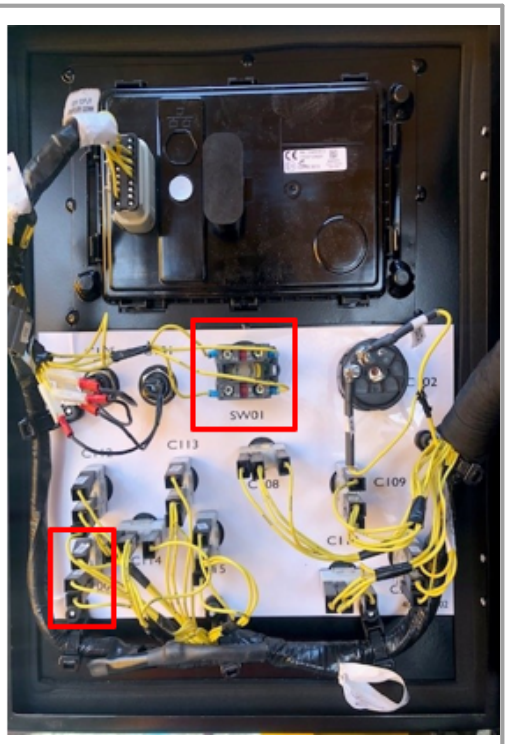

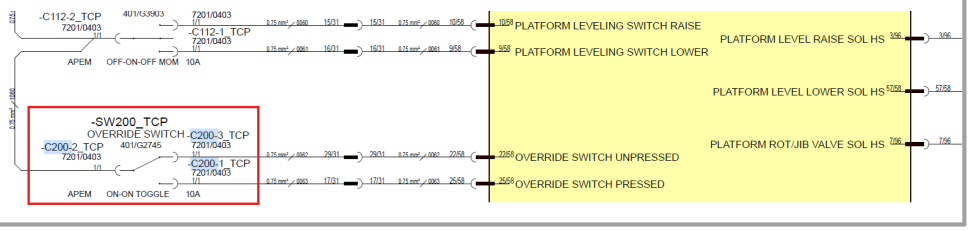

5.1.56 B1060-13

Error code:	B1060-13
ECU	Base ECU
Description:	E-Stop & Base Override - Override Switch Pressed and Override Switch Unpressed Open Circuit
Component:	Base Override Switch
Vehicle reaction:	1. Detect failure mode; Ignore input 2. Default to Override unpressed state
Possible Cause:	1. A poor connection or damaged terminal within the connector(s) 2. A damaged or broken wire within the wiring harness 3. Component is damaged
Service Action:	1. Check for broken wires at terminals of Override switch, Interconnect and Base Bosch ECU connectors. Check for 'backed out' terminals on Bosch

© 2026 JCB INDIA LTD

connectors. Check Connectors were engaged or plugged in correctly.
2. Check continuity from Override switch to interconnect and from interconnect to Bosch ECU.
3. Check operation of Override Switch. Check for any physical damage to the switch, connectors or harness components.



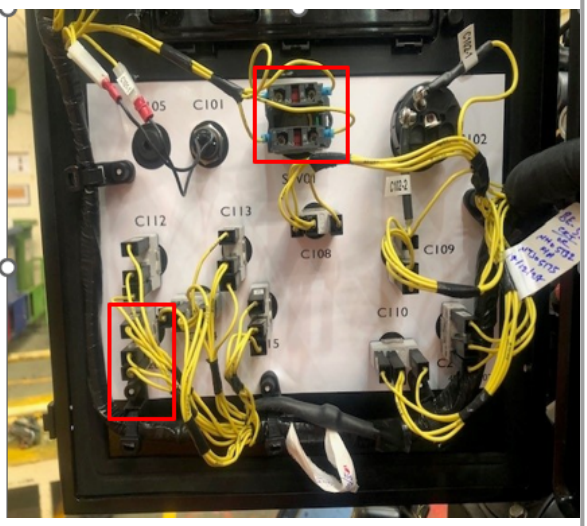

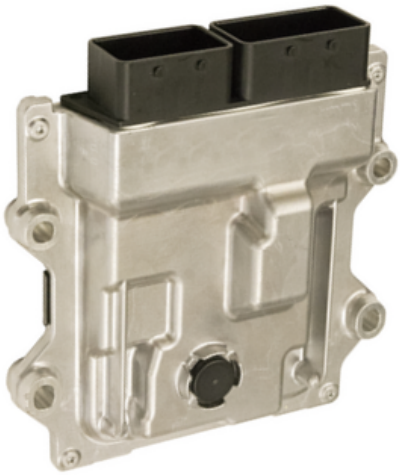

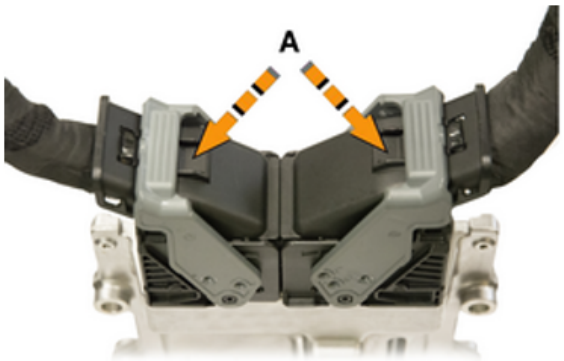



5.1.57 B1061-17

Error code:	B1061-17
ECU	Base ECU

© 2026 JCB INDIA LTD

Description:	Override switch unpressed short circuit to high
Component:	Override switch
Vehicle reaction:	Input will be ignored
Possible Cause:	1. A short circuit within the wiring harness 2. A short circuit within the harness connectors 3. Water damage/ingress within the harness connectors 4. Damaged component
Service Action:	1. Check wiring between Override Switch and Base Bosch ECU for Voltage greater than 10.5 volts. Check interconnect connector. Check wiring and diode between override switch and e-stop switch. 2. Disconnect connector to Bosch ECU, check continuity between override switch terminals -C200-3 & -C200-1. This should be 'Open Circuit'. Investigate if testing does not concur. 3. Check connectors are dry and free of any debris. Check for damaged pins on the Bosch connectors. 4. Check operation of Override Switch. 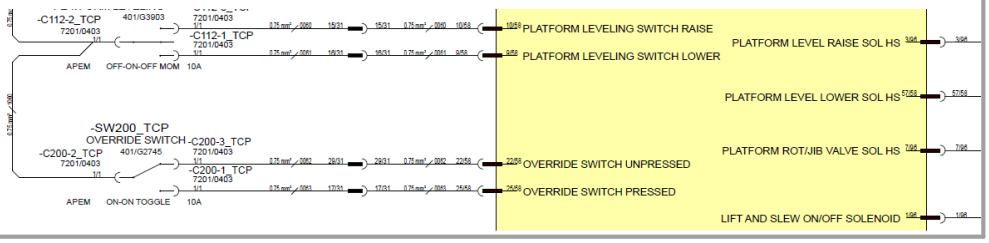

5.1.58 B1062-16

Error code:	**B1062-16**
ECU	Base ECU
Description:	E-Stop & Base Override - Override Switch Unpressed Short Circuit to Low
Component:	Base Override Switch
Vehicle reaction:	Detect failure mode; Ignore input Default to Override unpressed state
Possible Cause:	1. A short circuit within the wiring harness 2. A short circuit to the chassis 3. A short circuit within the harness connectors

© 2026 JCB INDIA LTD

	4. Water damage/ingress within the harness connectors 5. Damaged component
Service Action:	1. Check wiring between Override Switch and Base Bosch ECU. Check interconnect connector. Check wiring and diode between override switch and e-stop switch. Disconnect Bosch Base ECU and check continuity between override switch terminals -C200-3 & -C200-1 2. Check the wiring has not been shorted to the chassis of the vehicle (caused perhaps by pinching or abrasion). 3. Disconnect connector to Bosch ECU, check continuity between override switch terminals -C200-3 & -C200-1. This should be 'Open Circuit'. Investigate if testing does not concur. 4. Check connectors are dry and free of any debris. Check for damaged pins on the Bosch connectors. 5. Check operation of Override Switch. Check for any physical damage to the switch, connectors or harness components.  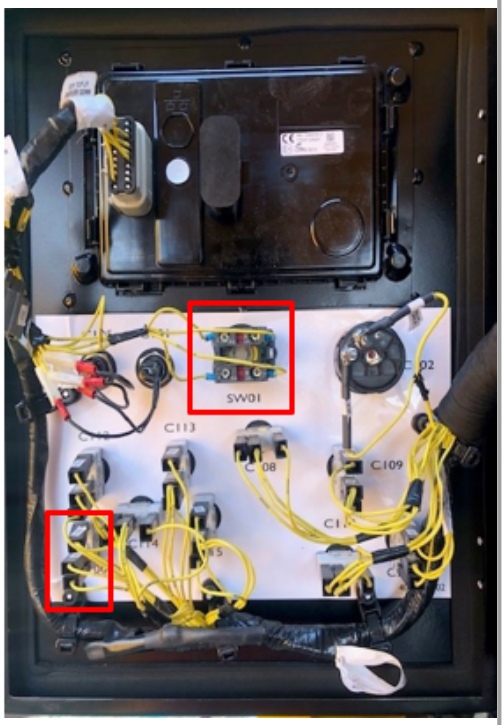 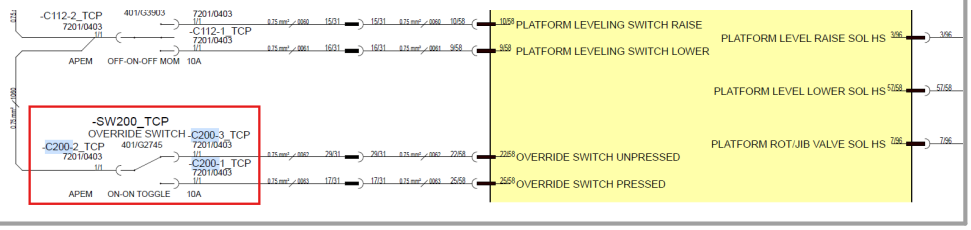

5.1.59 B1063-92

Error code:	**B1063-92**
ECU	Base ECU

© 2026 JCB INDIA LTD

Description :	E-Stop & Base Override - Override Switch Pressed and Override Switch Unpressed Both activated (5-10V)
Component :	Base Override Switch
Vehicle reaction:	Detect failure mode; Ignore input Default to Override unpressed state
Possible Cause:	1. A short circuit within the wiring harness 2. A short circuit within the harness connectors 3. Water damage/ingress within the harness connectors 4. Damaged component
Service Action:	1. Check wiring between Override Switch and Base Bosch ECU. Check interconnect connector. Check wiring and diode between override switch and e-stop switch. 2. Disconnect connector to Bosch ECU, check continuity between override switch terminals -C200-3 & -C200-1. This should be 'Open Circuit'. Investigate if testing does not concur. 3. Check connectors are dry and free of any debris. Check for damaged pins on the Bosch connectors. 4. Check operation of Override Switch.  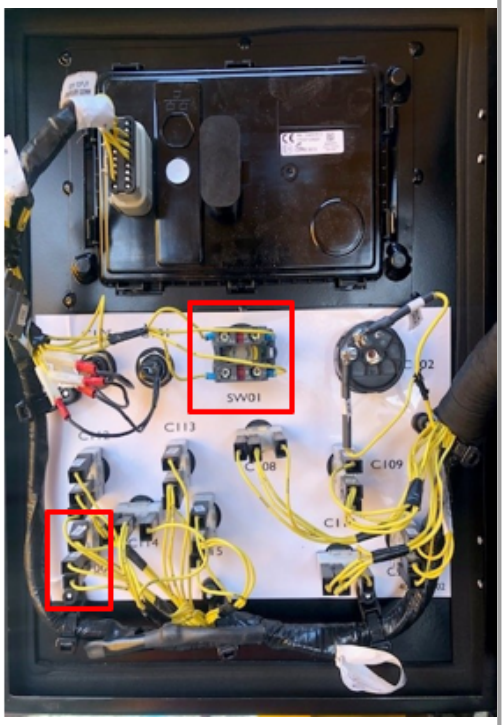

© 2026 JCB INDIA LTD

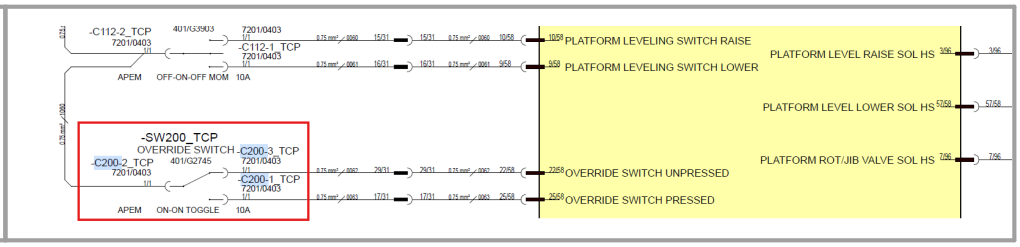

5.1.60 B1064-17

Error code:	B1064-17
ECU	Platform ECU
Description:	SLEW ACK SWITCH Short Circuit to High
Component:	Slew Acknowledgment Button
Vehicle reaction:	Detect failure mode; Ignore input
Possible Cause:	1. A short circuit within the wiring harness 2. A short circuit within the harness connectors 3. Water damage/ingress within the harness connectors 4. Damaged component
Service Action:	1. Disconnect -C205-2_PCP from the Slew Acknowledgment Switch. Measure voltage at -C205-2_PCP. If voltage is high (>5V) then there is a short circuit to high between the wiring from the terminal to the Platform Bosch ECU pin 51/58. 2. Check Platform Bosch ECU Connectors for any bent terminals or stray wiring. 3. Check all connectors / terminals for any water ingress. 4. Check operation of the Slew Acknowledgment switch. Check wiring for damage, especially abrasion or pinching.  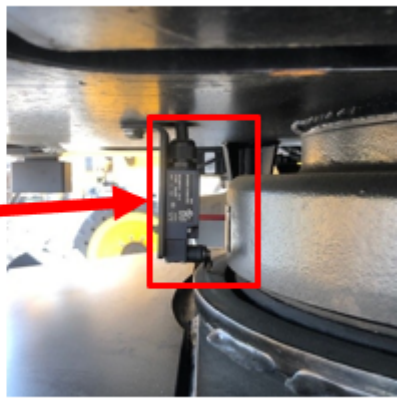

© 2026 JCB INDIA LTD

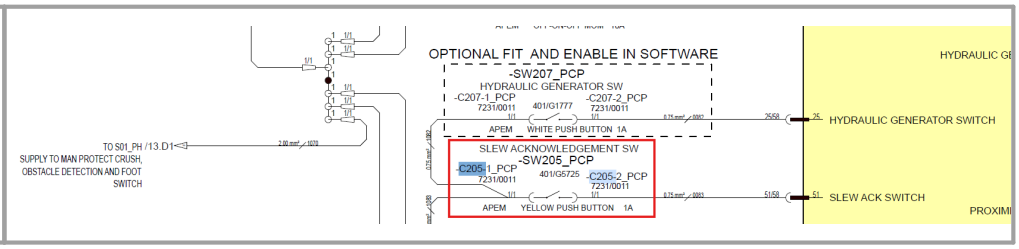

5.1.61 B1065-16

Error code:	B1065-16
ECU	Platform ECU
Description:	SLEW ACK SWITCH Short Circuit to Low
Component:	Slew Acknowledgment Button
Vehicle reaction:	Detect failure mode; Ignore input
Possible Cause:	1. A short circuit within the wiring harness 2. A short circuit to the chassis 3. A short circuit within the harness connectors 4. Water damage/ingress within the harness connectors 5. Damaged component
Service Action:	1. Disconnect -C205-2_PCP from the Slew Acknowledgment Switch. Measure voltage at -C205-2_PCP. If voltage is Low (<2V) then there is a short circuit to Low between the wiring from the terminal to the Platform Bosch ECU pin 51/58. 2. Check no exposed wiring near switch that may be touching metalwork. 3. Check Platform Bosch ECU Connectors for any bent terminals or stray wiring. 4. Check all connectors / terminals for any water ingress. 5. Check operation of the Slew Acknowledgment switch. Check wiring for damage, especially abrasion or pinching.

© 2026 JCB INDIA LTD

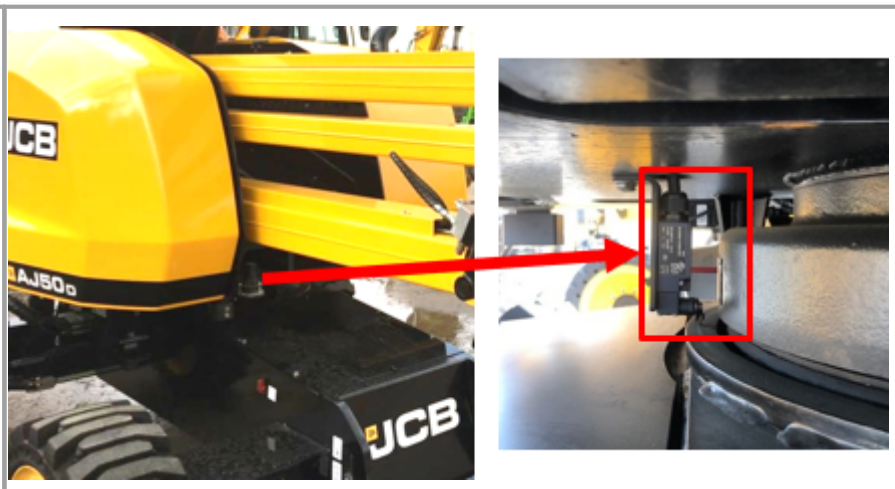

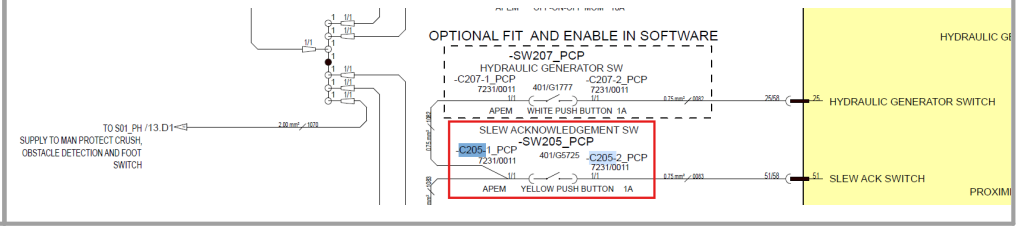

5.1.62 B1066-24

Error code:	B1066-24
ECU	Platform ECU
Description:	SLEW ACK SWITCH Short Circuit Stuck for >= 10 seconds
Component:	Slew Acknowledgment Button
Vehicle reaction:	Detect failure mode; Ignore input
Possible Cause:	1. A short circuit within the wiring harness 2. A short circuit within the harness connectors 3. Water damage/ingress within the harness connectors 4. Damaged component
Service Action:	Slew Acknowledgment Switch Test • Disconnect connectors C205-1_PCP and C205-2_PCP from the Slew Acknowledgment Switch. • Use a multimeter to verify the switch operation: ○ Check continuity when the switch is actuated. ○ Ensure no unexpected short between terminals.

© 2026 JCB INDIA LTD

Wire Integrity

- Inspect Wire #0083:
  - Confirm it is not shorted to +10V.
  - Perform a resistance check to ensure no leakage to power.

Connector Condition

- Check all connectors for:
  - Water ingress
  - Corrosion
  - Physical damage
  - Stray wires causing shorts

Harness Inspection

- Examine harness for:
  - Abrasion
  - Pinching
  - Cuts or exposed conductors
- Inspect connector pins for:
  - Bent or backed-out pins
  - Proper seating and locking

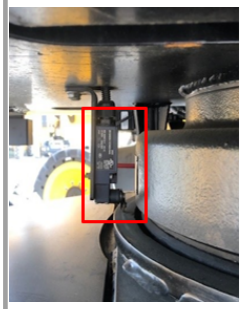

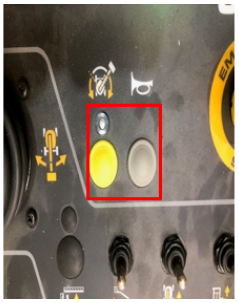

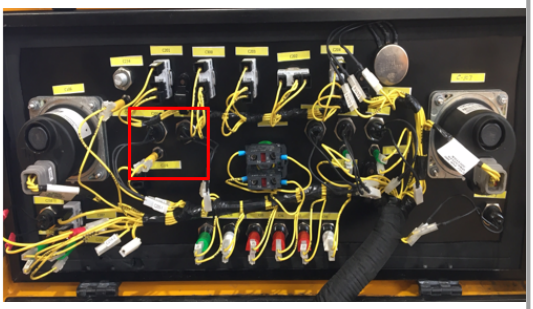

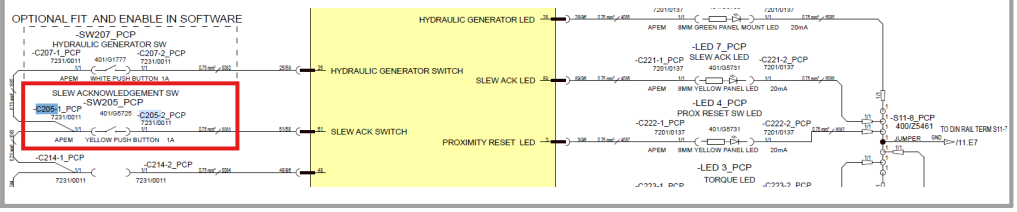

5.1.63 B1067-17

Error code:	B1067-17

© 2026 JCB INDIA LTD

ECU	Platform ECU
Description:	Potentiometer Selector Short Circuit to High (>5.5V)
Component:	Potentiometer
Vehicle reaction:	Detect failure mode - Set Potentiometer to 10%
Possible Cause:	1. A short circuit within the wiring harness 2. A short circuit within the harness connectors 3. Water damage/ingress within the harness connectors 4. Damaged component
Service Action:	1. Measure voltage at pin 2 of speed selector potentiometer. The voltage should range from 0V - 5V as the knob is turned. If voltage stays at 5V, then it is likely the potentiometer has failed. If the voltage is above 5.5V then it is likely to be a short circuit to high within the wiring from potentiometer to Platform Bosch ECU pin 39/96. 2. Check wire #4075 from Potentiometer to Platform Bosch ECU pin 39/96. 3. Check for water ingress at Platform Bosch ECU Connectors. 4. Check Wiring for any abrasions or pinching. Check function of potentiometer. Resistance value from pin 1 to pin 3 = 5000ohms. Check resistance from pin 1 to pin 2 - should change value from 0 to 5000 ohms depending on knob position.  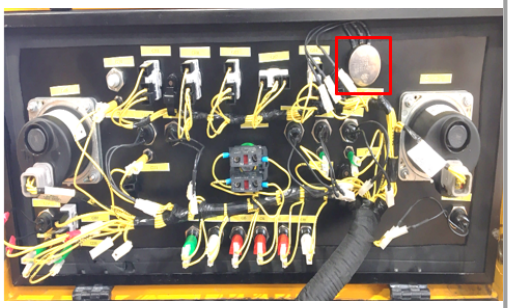 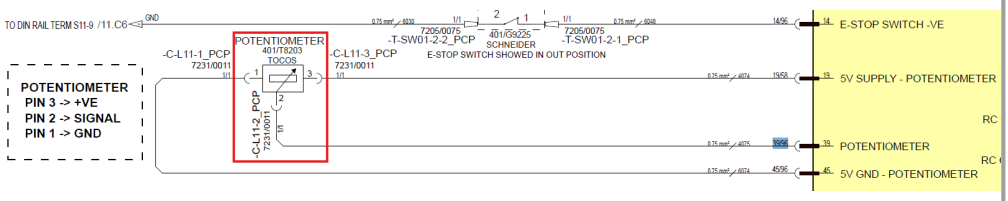

5.1.64 B1069-17

Error code:	**B1069-17**
ECU	Platform ECU

© 2026 JCB INDIA LTD

Description :	Drive JOYSTICK Short Circuit to High (>4.75V)
Component :	Drive Joystick
Vehicle reaction:	Detect failure mode - Ignore drive & Steer input (machine stops immediately)
Possible Cause:	1. A short circuit within the wiring harness 2. A short circuit within the harness connectors 3. Water damage/ingress within the harness connectors 4. Damaged component
Service Action:	1. Measure voltage between pin 1/6 (GND) and pin 4/6 (Drive) on joystick connector. Voltage should measure between 0.25 - 4.75V depending on position of Joystick. If value is above 4.75V then there is likely a short circuit to high either within the joystick or wiring back to the Platform Bosch ECU Pin 26/58. 2. Check Connectors at joystick and Platform Bosch ECU, check for bent pins or stray wires potentially causing a short circuit. 3. Check Connectors at joystick and Platform Bosch ECU for water ingress. 4. Check joystick for damage. Check all wiring for potential damage, especially abrasions and pinching.



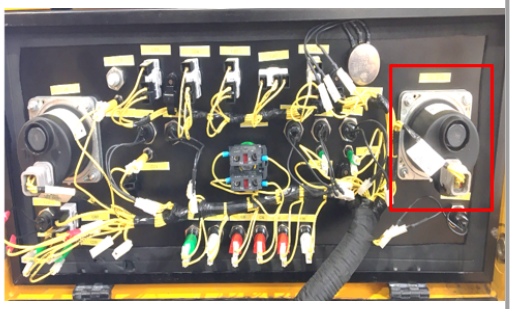

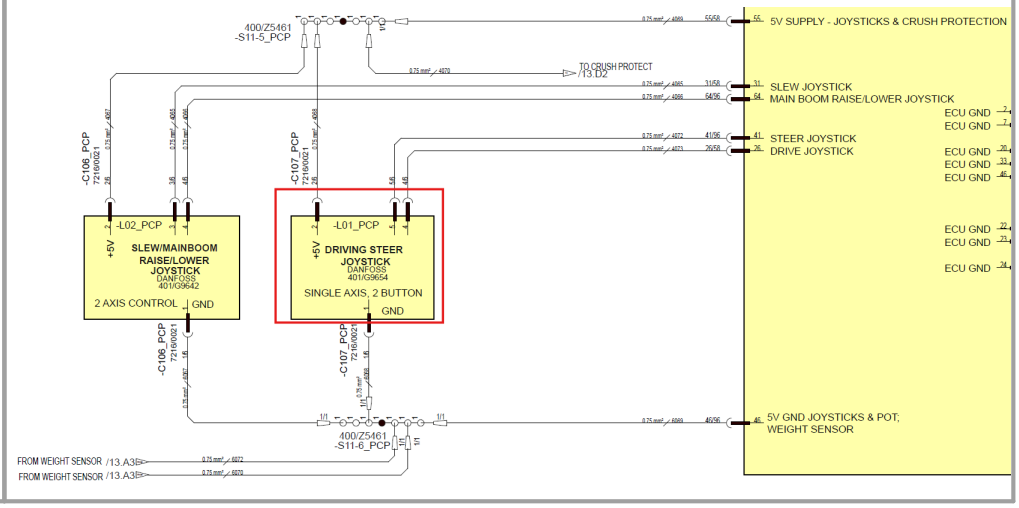

© 2026 JCB INDIA LTD

5.1.65 B1070-16

Error code:	B1070-16
ECU	Platform ECU
Description:	Drive JOYSTICK Short Circuit to Low (<0.25V) or Open Circuit
Component:	Drive Joystick
Vehicle reaction:	Detect failure mode - Ignore drive & Steer input (machine stops immediately)
Possible Cause:	1. A short circuit within the wiring harness 2. A short circuit to the chassis 3. A short circuit within the harness connectors 4. Water damage/ingress within the harness connectors 5. Damaged component 6. A damaged or broken wire within the wiring harness
Service Action:	1. Measure voltage between pin 1/6 (GND) and pin 4/6 (Drive) on joystick connector. Voltage should measure between 0.25 - 4.75V depending on position of Joystick. If value is below 0.25V then there is likely a short circuit to GND either within the joystick or wiring back to the Platform Bosch ECU Pin 26/58. 2. Check Connectors at joystick and Platform Bosch ECU, check for bent pins or stray wires potentially causing a short circuit. 3. Check Connectors at joystick and Platform Bosch ECU for water ingress. 4. Check joystick for damage. Check all wiring for potential damage, especially abrasions and pinching.  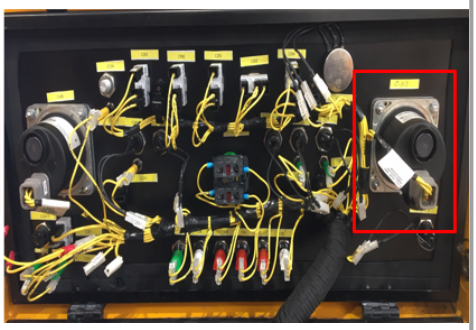

© 2026 JCB INDIA LTD

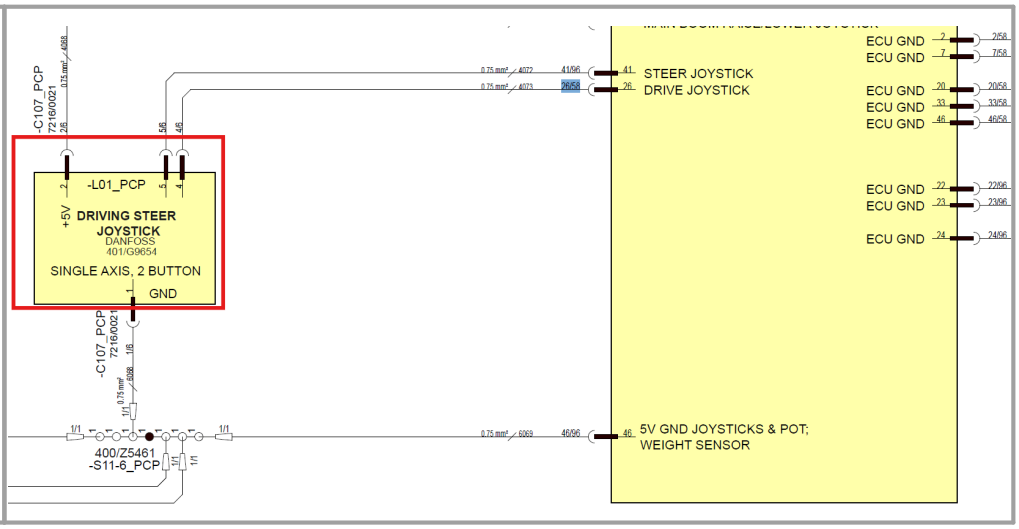

5.1.66 B1071-17

Error code:	B1071-17
ECU	Base ECU
Description:	PLATFORM LEVELING RAISE Switch Short Circuit to High
Component:	Platform Level Switch
Vehicle reaction:	Before operation: Ignore the input (but not o/p as it can be operated from where there is no fault) After operation (in case of STto12V): Refer to 10V System Short Circuit Fault reaction
Possible Cause:	1. A short circuit within the wiring harness 2. A short circuit within the harness connectors 3. Water damage/ingress within the harness connectors 4. Damaged component
Service Action:	1. Measure voltage at Platform Leveling Raise terminal, -C204-1_PCP. With switch not pressed, terminal voltage should be approx 2.5-3.0V. With switch pressed, voltage should rise to 10V. If Voltage at terminal is constant 10V or higher, then there is a short to high either at the switch, wiring harness or at the Platform Bosch ECU connectors. If voltage is high, remove -C204-2_PCP, if voltage now drops, then switch is faulty, else, the fault is at the harness to the Bosch ECU. 2. Check Platform Bosch ECU Connectors for bent pins or stray wires that are potentially causing a short circuit. 3. Check connectors for any sign of water ingress. 4. Check function of switch, check wiring from switch to ECU, checking for abrasions and pinching or any form of damage.

© 2026 JCB INDIA LTD



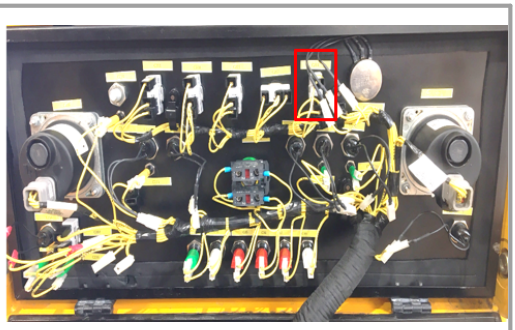

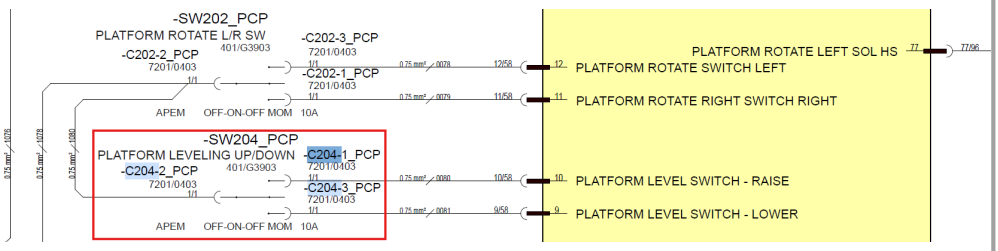

5.1.67 B1072-17

Error code:	B1072-17
ECU	Base ECU
Description:	PLATFORM LEVELING LOWER Switch Short Circuit to High
Component:	Platform Level Switch
Vehicle reaction:	Before operation: Ignore the input (but not output as it can be operated from where there is no fault) After operation: Refer to 10V System Short Circuit Fault reaction
Possible Cause:	1. A short circuit within the wiring harness 2. A short circuit within the harness connectors 3. Water damage/ingress within the harness connectors 4. Damaged component
Service Action:	1. Measure voltage at Platform Leveling Lower terminal, -C204-3_PCP. With switch not pressed, terminal voltage should be approx 2.5-3.0V. With switch pressed, voltage should rise to 10V. If Voltage at terminal is constant 10V or higher, then there is a short to high either at the switch, wiring harness or at the Platform Bosch ECU connectors. If voltage is high, remove -C204-2_PCP, if voltage now drops, then switch is faulty, else, the fault is at the harness to the Bosch ECU. 2. Check Platform Bosch ECU Connectors for bent pins or stray wires that are potentially causing a short circuit. 3. Check connectors for any sign of water ingress.

© 2026 JCB INDIA LTD

	4. Check function of switch, check wiring from switch to ECU, checking for abrasions and pinching or any form of damage.  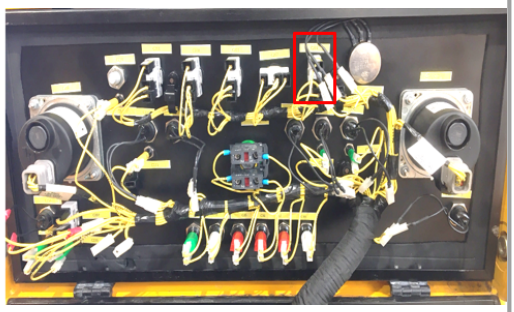 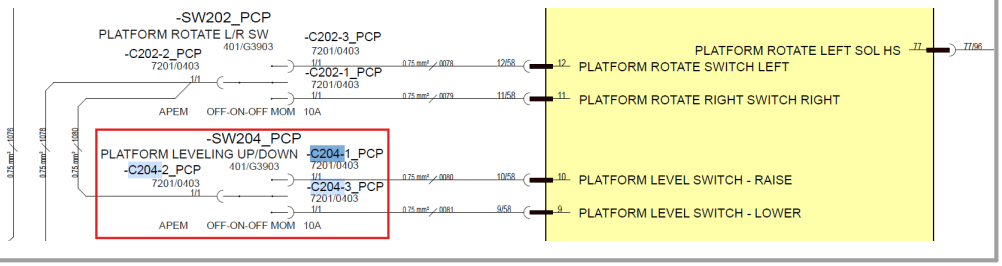

5.1.68 B1073-92

Error code:	**B1073-92**
ECU	Base ECU
Description:	PLATFORM LEVELING RAISE and LOWER Switches both activated (5 - 10V)
Component:	Platform Level Switch
Vehicle reaction:	Ignore the input (but not output as it can be operated from where there is no fault)
Possible Cause:	1. A short circuit within the wiring harness 2. A short circuit within the harness connectors 3. Water damage/ingress within the harness connectors 4. Damaged component
Service Action:	1. Measure voltage at Platform Leveling Raise &Lower terminals, -C204-1_PCP & -C204-3_PCP. With switch not pressed, terminal voltage should be approx 2.5-3.0V. With switch pressed, voltage should rise to 10V. If Voltage at terminal is constant 10V or higher, then there is a short to high either at the switch, wiring harness or at the Platform Bosch ECU connectors (Pins 9/58 & 10/58). If voltage is high, remove -C204-2_PCP, if voltage now drops, then switch is faulty, else, the fault is at the harness to the Bosch ECU. 2. Check Platform Bosch ECU Connectors for bent pins or stray wires that are potentially causing a short circuit. 3. Check connectors for any sign of water ingress.

© 2026 JCB INDIA LTD

	4. Check function of switch, check wiring from switch to ECU, checking for abrasions and pinching or any form of damage.  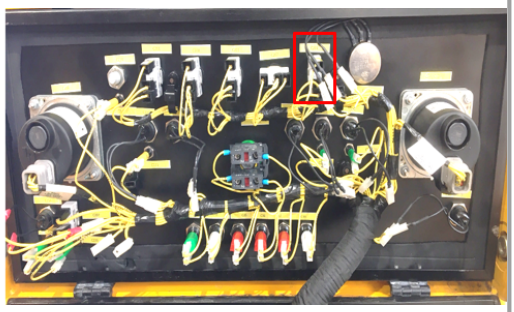 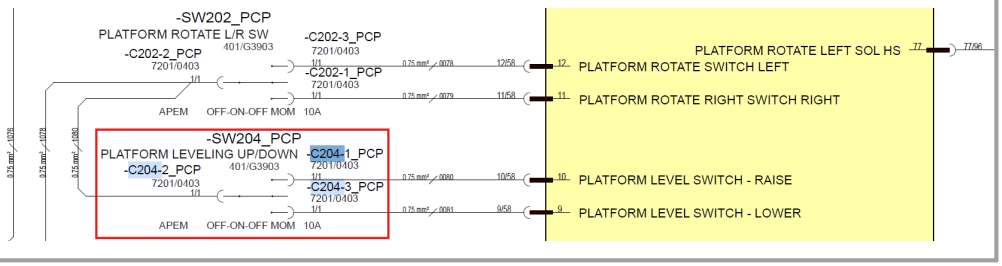

5.1.69 B1074-16

Error code:	**B1074-16**
ECU	Base ECU
Description:	PLATFORM LEVELING RAISE Switch Short Circuit to Low
Component:	Platform Level Switch
Vehicle reaction:	Before operation: Ignore the input (but not output as it can be operated from where there is no fault) After operation: Refer to 10V System Short Circuit Fault reaction
Possible Cause:	1. A short circuit within the wiring harness 2. A short circuit to the chassis 3. A short circuit within the harness connectors 4. Water damage/ingress within the harness connectors 5. Damaged component
Service Action:	1. Measure voltage at Platform Leveling Raise terminal, -C204-1_PCP. With switch not pressed, terminal voltage should be approx 2.5-3.0V. With switch pressed, voltage should rise to 10V. If Voltage at terminal is constantly <2.4V or lower, then there is a short to GND either at the switch, wiring harness or at the Platform Bosch ECU connectors. If voltage is Low, remove -C204-2_PCP, if voltage now rises to ~2.5V, then switch is faulty, else, the fault is at the harness to the Bosch ECU. 2. Check there are no visible defects in the wiring causing a short circuit to chassis / GND

© 2026 JCB INDIA LTD

	3. Check Platform Bosch ECU Connectors for bent pins or stray wires that are potentially causing a short circuit. 4. Check connectors for any sign of water ingress. 5. Check function of switch, check wiring from switch to ECU, checking for abrasions and pinching or any form of damage.  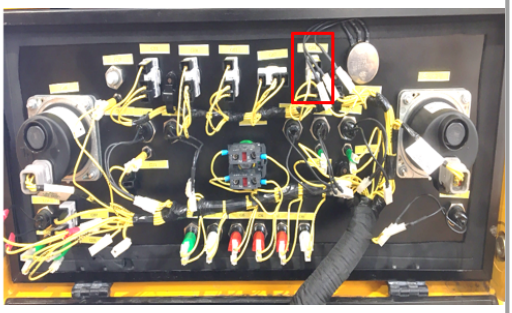 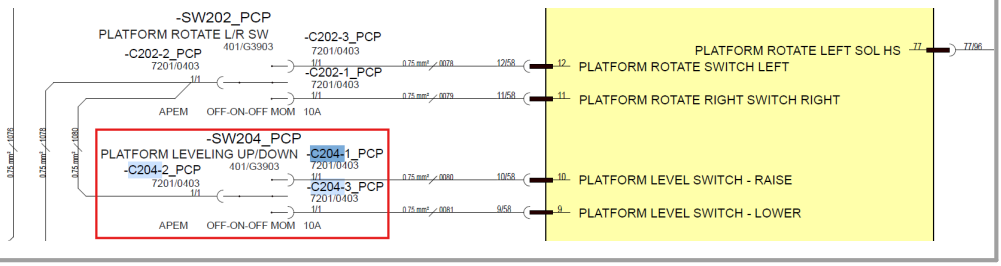

5.1.70 B1075-16

Error code:	B1075-16
ECU	Base ECU
Description:	PLATFORM LEVELING LOWER Switch Short Circuit to Low
Component:	Platform Level Switch
Vehicle reaction:	Before operation: Ignore the input (but not output as it can be operated from where there is no fault) After operation: Refer to 10V System Short Circuit Fault reaction
Possible Cause:	1. A short circuit within the wiring harness 2. A short circuit to the chassis 3. A short circuit within the harness connectors 4. Water damage/ingress within the harness connectors 5. Damaged component
Service Action:	1. Measure voltage at Platform Leveling Lower terminal, -C204-3_PCP. With switch not pressed, terminal voltage should be approx 2.5-3.0V. With switch pressed, voltage should rise to 10V. If Voltage at terminal is constantly <2.4V or lower, then there is a short to GND either at the switch, wiring harness or at the Platform Bosch ECU connectors. If voltage is Low, remove

© 2026 JCB INDIA LTD

	-C204-2_PCP, if voltage now rises to ~2.5V, then switch is faulty, else, the fault is at the harness to the Bosch ECU. 2. Check there are no visible defects in the wiring causing a short circuit to chassis / GND 3. Check Platform Bosch ECU Connectors for bent pins or stray wires that are potentially causing a short circuit. 4. Check connectors for any sign of water ingress. 5. Check function of switch, check wiring from switch to ECU, checking for abrasions and pinching or any form of damage.  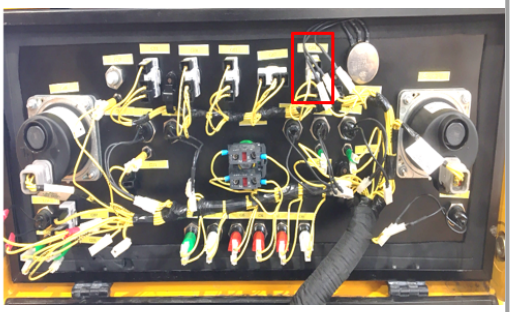 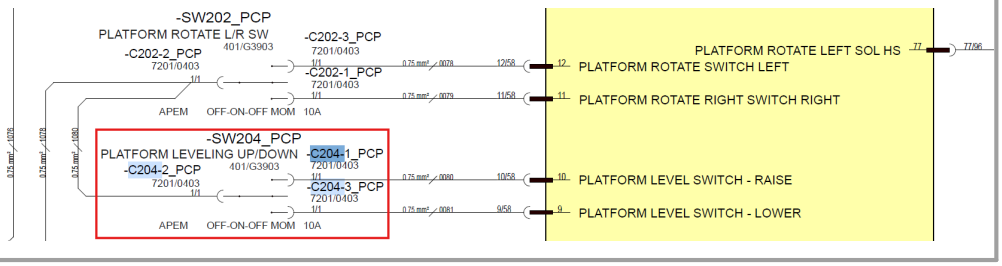

5.1.71 B1076-17

Error code:	**B1076-17**
ECU	Base ECU
Description:	MAIN BOOM RAISE OR LOWER PROPORTIONAL Solenoid Valve High Side Short Circuit to High
Component:	MAIN BOOM RAISE OR LOWER PROPORTIONAL Solenoid Valve
Vehicle reaction:	Disable main-boom raise and lower outputs
Possible Cause:	1. Poor connection 2. Break in wiring 3. Water in connector 4. Broken pin or connector 5. Damage solenoid

© 2026 JCB INDIA LTD

Service Action:	1. Check resistance of the coil 5-10 ohms 2. Check wiring from coil to ECU wire 4045,4046 & 4047A, 4047B, 4047C for cut, pinch or and damage. 3. Check ECU Pin 54/96, 78/96, 84/96 for bend or back out or any damage. 4. Check solenoid connector C05_TH and C06_TH for loose connection or any damage. 5. Check if valve is mechanically jammed 6. Turn machine ignition on/off to clear code. 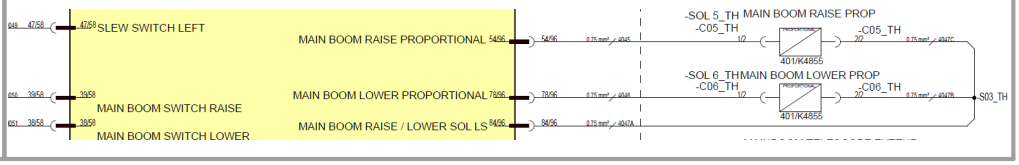

5.1.72 B1077-16

Error code:	**B1077-16**
ECU	Base ECU
Description:	MAIN BOOM RAISE OR LOWER PROPORTIONAL Solenoid Valve High Side Short Circuit to Low
Component:	MAIN BOOM RAISE OR LOWER PROPORTIONAL Solenoid Valve
Vehicle reaction:	Disable main-boom raise and lower outputs
Possible Cause:	1. Poor connection 2. Break in wiring 3. Water in connector 4. Broken pin or connector 5. Damage solenoid
Service Action:	1. Check resistance of the coil 5-10 ohms 2. Check wiring from coil to ECU wire 4045,4046 & 4047A, 4047B, 4047C for cut, pinch or and damage. 3. Check ECU Pin 54/96, 78/96, 84/96 for bend or back out or any damage. 4. Check solenoid connector C05_TH and C06_TH for loose connection or any damage. 5. Check if valve is mechanically jammed 6. Turn machine ignition on/off to clear code.

© 2026 JCB INDIA LTD

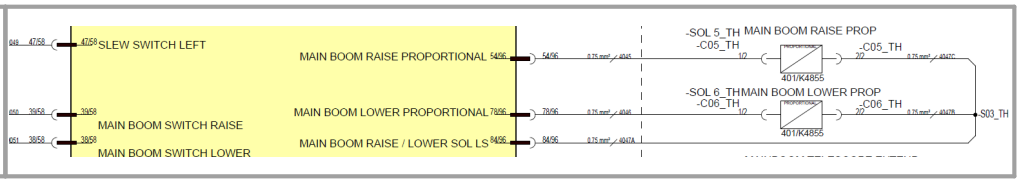

5.1.73 B1078-13

Error code:	B1078-13
ECU	Base ECU
Description:	MAIN BOOM RAISE OR LOWER PROPORTIONAL Solenoid Valve High Side Open Circuit
Component:	MAIN BOOM RAISE OR LOWER PROPORTIONAL Solenoid Valve
Vehicle reaction:	Disable main-boom raise and lower outputs
Possible Cause:	1. Poor connection 2. Break in wiring 3. Water in connector 4. Broken pin or connector 5. Damage solenoid
Service Action:	Check Coil Resistance • Measure resistance of the coil; it should be between 5–10 Ω. Inspect Wiring • Verify wiring from coil to ECU for wires 4045, 4046, 4047A, 4047B, 4047C. • Look for cuts, pinches, or any physical damage. Check ECU Pins • Inspect ECU pins 54/96, 78/96, 84/96 for bending, backing out, or damage. Check Solenoid Connectors • Examine connectors C05_TH and C06_TH for loose connections or damage.

© 2026 JCB INDIA LTD

	Verify Valve Condition • Ensure the valve is not mechanically jammed. Clear Fault Code • Turn machine ignition ON/OFF to clear the code. 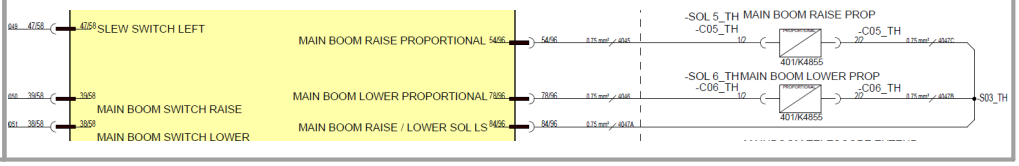

5.1.74 B1079-17

Error code:	**B1079-17**
ECU	Base ECU
Description:	MAIN BOOM RAISE OR LOWER PROPORTIONAL Solenoid Valve Fault
Component:	MAIN BOOM RAISE OR LOWER PROPORTIONAL Solenoid Valve
Vehicle reaction:	Disable main boom lower solenoid
Possible Cause:	1. Poor connection 2. Break in wiring 3. Water in connector 4. Broken pin or connector 5. Damage solenoid
Service Action:	1. Check resistance of the coil 5-10 ohms 2. Check wiring from coil to ECU wire 4045,4046 & 4047A, 4047B, 4047C for cut, pinch or and damage. 3. Check ECU Pin 54/96, 78/96, 84/96 for bend or back out or any damage. 4. Check solenoid connector C05_TH and C06_TH for loose connection or any damage. 5. Check if valve is mechanically jammed 6. Turn machine ignition on/off to clear code.

© 2026 JCB INDIA LTD

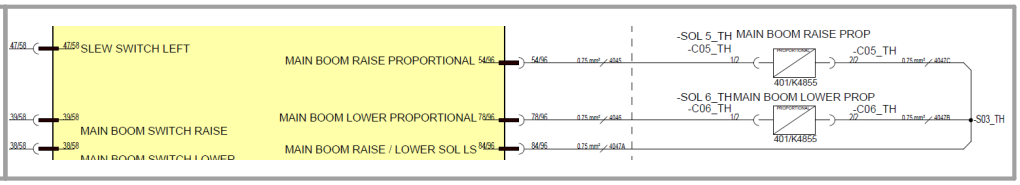

5.1.75 B1080-17

Error code:	B1080-17
ECU	Base ECU
Description:	SLEW RIGHT OR LEFT PROPORTIONAL Solenoid Valve High Side Short Circuit to High
Component:	SLEW RIGHT OR LEFT PROPORTIONAL Solenoid Valve
Vehicle reaction:	Disable slew outputs
Possible Cause:	1. Poor connection 2. Break in wiring 3. Water in connector 4. Broken pin or connector 5. Damage solenoid
Service Action:	1. Check harness connector is fully inserted into solenoid connector 2. Check resistance of coil 5-10 ohms. 3. Check no shorts to GND, check for abrasions and pinching in harness and stray wires 4. Check wiring from coil to ECU wire 4054,4055 & 4056A, 4056B, 4056C for cut, pinch or and damage. 5. Check ECU Pin 73/96, 49/96, 87/96 for bend or back out or any damage. 6. Measure continuity at Pin 1 to GND of both connectors to determine which wire is shorted to GND. 7. Check solenoid connector C07_TH and C08_TH for loose connection or any damage. 8. Check if valve is mechanically jammed 9. Turn machine ignition on/off to clear code. 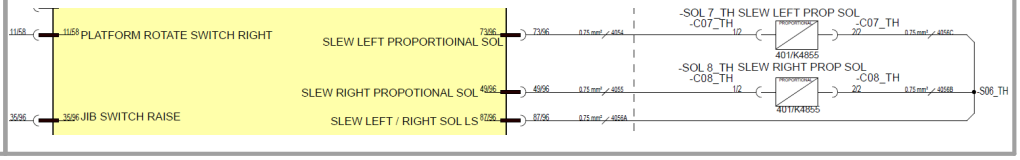

© 2026 JCB INDIA LTD

5.1.76 B1081-16

Error code:	B1081-16
ECU	Base ECU
Description:	SLEW RIGHT OR LEFT PROPORTIONAL Solenoid Valve High Side Short Circuit to Low
Component:	SLEW RIGHT OR LEFT PROPORTIONAL Solenoid Valve
Vehicle reaction:	Disable slew outputs
Possible Cause:	1. Poor connection 2. Break in wiring 3. Water in connector 4. Broken pin or connector 5. Damage solenoid
Service Action:	1. Check harness connector is fully inserted into solenoid connector 2. Check resistance of coil 5-10 ohms. 3. Check no shorts to GND, check for abrasions and pinching in harness and stray wires 4. Check wiring from coil to ECU wire 4054,4055 & 4056A, 4056B, 4056C for cut, pinch or and damage. 5. Check ECU Pin 73/96, 49/96, 87/96 for bend or back out or any damage. 6. Measure continuity at Pin 1 to GND of both connectors to determine which wire is shorted to GND. 7. Check solenoid connector C07_TH and C08_TH for loose connection or any damage. 8. Check if valve is mechanically jammed 9. Turn machine ignition on/off to clear code. 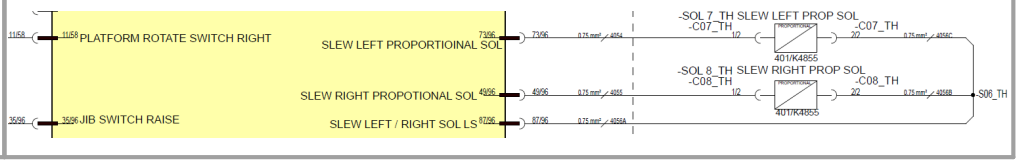

5.1.77 B1082-13

Error code:	B1082-13

© 2026 JCB INDIA LTD

ECU	Base ECU
Description:	SLEW RIGHT OR LEFT PROPORTIONAL Solenoid Valve High Side Open Circuit
Component:	SLEW RIGHT OR LEFT PROPORTIONAL Solenoid Valve
Vehicle reaction:	Disable the slew outputs
Possible Cause:	1. Poor or loose connection 2. Break in wiring 3. Water in connector 4. Broken pin or connector 5. Faulty or Damage solenoid
Service Action:	Check Coil Resistance • Measure resistance of the coil; it should be between 5–10 Ω. Inspect Wiring • Verify wiring from coil to ECU for wires 4054, 4055, 4056A, 4056B, 4056C. • Look for cuts, pinches, or any physical damage. Check ECU Pins • Inspect ECU pins 73/96, 49/96, 87/96 for bending, backing out, or damage. Check Solenoid Connectors • Examine connectors C07_TH and C08_TH for loose connections or damage. Verify Valve Condition • Ensure the valve is not mechanically jammed. Clear Fault Code • Turn machine ignition ON/OFF to clear the code.

© 2026 JCB INDIA LTD

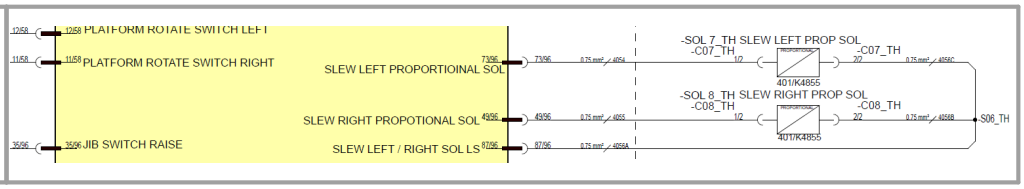

5.1.78 B1083-17

Error code:	B1083-17
ECU	Base ECU
Description:	SLEW RIGHT OR LEFT PROPORTIONAL Solenoid Valve Fault
Component:	SLEW RIGHT OR LEFT PROPORTIONAL Solenoid Valve
Vehicle reaction:	Disable slew outputs
Possible Cause:	1. Poor connection 2. Break in wiring 3. Water in connector 4. Broken pin or connector 5. Damage solenoid
Service Action:	1. Check harness connector is fully inserted into solenoid connector 2. Check resistance of coil 5-10 ohms 3. Check wiring from coil to ECU wire 4054,4055 & 4056A, 4056B, 4056C for cut, pinch or and damage. 4. Check ECU Pin 73/96, 49/96, 87/96 for bend or back out or any damage. 5. Check solenoid connector C07_TH and C08_TH for loose connection or any damage. 6. Check if valve is mechanically jammed 7. Turn machine ignition on/off to clear code. 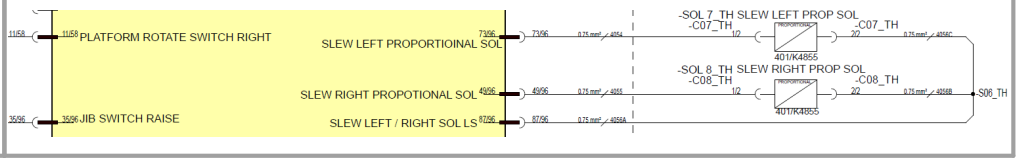

5.1.79 B1084-17

Error code:	B1084-17

© 2026 JCB INDIA LTD

ECU	Base ECU
Description:	MAIN BOOM EXTEND OR RETRACT DIRECTIONAL Solenoid Valve High Side Short Circuit to High OR Short Circuit to Low
Component:	MAIN BOOM EXTEND OR RETRACT DIRECTIONAL Solenoid Valve
Vehicle reaction:	Detect failure mode with Safout method - Switch this output to off Before Ignition ON, POST Fail (stuck in startup logic) and Generic output fault
Possible Cause:	1. A short circuit within the wiring harness 2. A short circuit within the harness connectors 3. Water damage/ingress within the harness connectors 4. Damaged component
Service Action:	1. Check wiring between ECU and solenoid for voltage greater than 10.5 volts. 2. check for continuity to ground. 3. Check wiring from coil to ECU wire 4048,4049 & 4050A, 4050B, 4050C for cut, pinch or and damage. 4. Check ECU Pin 73/96, 49/96, 87/96 for bend or back out or any damage. 5. Check solenoid connector C04_TH and C03_TH for loose connection or any damage. 6. Check if valve is mechanically jammed 2. Turn machine ignition on/off to clear code. 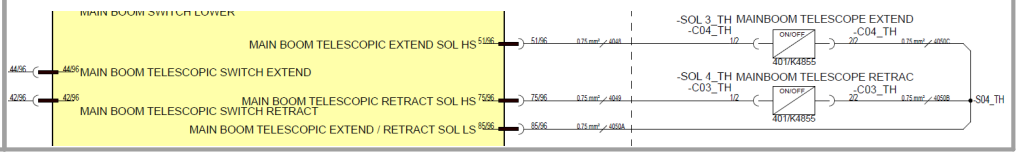

5.1.80 B1086-13

Error code:	**B1086-13**
ECU	Base ECU
Description:	MAIN BOOM EXTEND OR RETRACT DIRECTIONAL Solenoid Valve High Side & Low Side Open Circuit
Component:	MAIN BOOM EXTEND OR RETRACT DIRECTIONAL Solenoid Valve
Vehicle reaction:	Disable main boom outputs

© 2026 JCB INDIA LTD

Possible Cause:	1. A short circuit within the wiring harness 2. A short circuit within the harness connectors 3. Water damage/ingress within the harness connectors 4. Damaged component. 5. Break in wiring, poor connection at solenoids
Service Action:	1. Check wiring between ECU and solenoid for voltage greater than 10.5 volts. 2. check for continuity to ground. 3. Check wiring from coil to ECU wire 4048,4049 & 4050A, 4050B, 4050C for cut, pinch or and damage. 4. Check ECU Pin 73/96, 49/96, 87/96 for bend or back out or any damage. 5. Check solenoid connector C04_TH and C03_TH for loose connection or any damage. 6. Check if valve is mechanically jammed 7. Turn machine ignition on/off to clear code. 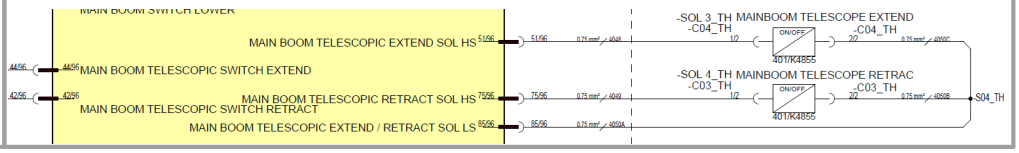

5.1.81 B1087-17

Error code:	**B1087-17**
ECU	Base ECU
Description:	MAIN BOOM EXTEND OR RETRACT DIRECTIONAL Solenoid Valve Fault
Component:	MAIN BOOM EXTEND OR RETRACT DIRECTIONAL Solenoid Valve
Vehicle reaction:	Detect failure mode with Safout method - Switch Main Boom output to off (High Side & Low Side Short Circuit to Low or Open Circuit)
Possible Cause:	1. Poor or loose connection 2. Break in wiring 3. Water in connector 4. Broken pin or connector 5. Faulty or Damage solenoid
Service Action:	1. Check wiring between ECU and solenoid for voltage greater than 10.5 volts.

© 2026 JCB INDIA LTD

	2. Check wiring from coil to ECU wire 4048,4049 & 4050A, 4050B, 4050C for cut, pinch or and damage. 3. Check ECU Pin 51/96, 75/96, 85/96 for bend or back out or any damage. 4. Check solenoid connector C04_TH and C03_TH for loose connection or any damage. 5. Check if valve is mechanically jammed 6. Turn ignition on off to clear code 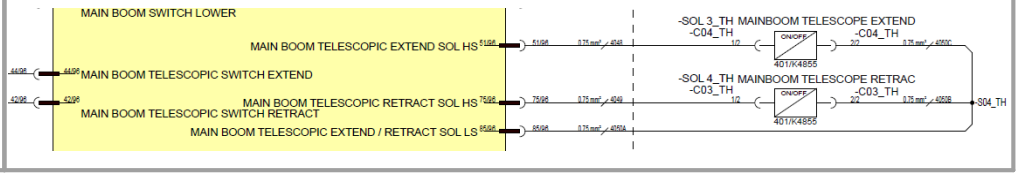

5.1.82 B1088-17

Error code:	B1088-17
ECU	Base ECU
Description:	STEER RIGHT OR LEFT DIRECTIONAL Solenoid Valve High Side Short Circuit to High
Component:	STEER RIGHT OR LEFT DIRECTIONAL Solenoid Valve
Vehicle reaction:	Detect failure mode with Safout method - Switch Steer output to off
Possible Cause:	1. Poor or loose connection 2. Break in wiring 3. Water in connector 4. Broken pin or connector 5. Faulty or Damage solenoid
Service Action:	1.Check coil resistance 5-10 ohms 2. Check wiring from coil to ECU wire 4051,4052 & 4053A, 4053B, 4053C for cut, pinch or and damage. 3. Check ECU Pin 74/96, 50/96, 80/96 for bend or back out or any damage. 4. Check solenoid connector C09_TH and C10_TH for loose connection or any damage. 5. Check if valve is mechanically jammed. 6 Turn ignition on off to clear code.

© 2026 JCB INDIA LTD

	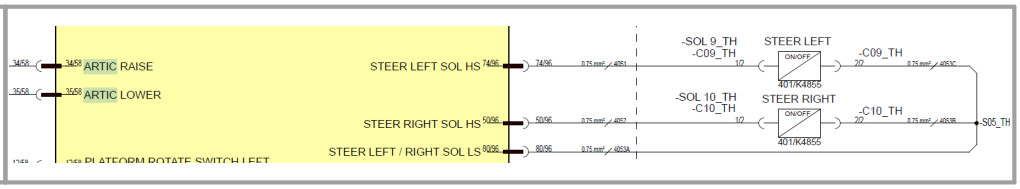

5.1.83 B1089-16

Error code:	B1089-16
ECU	Base ECU
Description:	STEER RIGHT OR LEFT DIRECTIONAL Solenoid Valve High Side Short Circuit to Low
Component:	STEER RIGHT OR LEFT DIRECTIONAL Solenoid Valve
Vehicle reaction:	Detect failure mode with Safout method - Switch Steer output to off
Possible Cause:	1. Poor or loose connection 2. Break in wiring 3. Water in connector 4. Broken pin or connector 5. Faulty or Damage solenoid
Service Action:	1.Check coil resistance 5-10 ohms 2. Check wiring from coil to ECU wire 4051,4052 & 4053A, 4053B, 4053C for cut, pinch or and damage. 3. Check ECU Pin 74/96, 50/96, 80/96 for bend or back out or any damage. 4. Check solenoid connector C09_TH and C10_TH for loose connection or any damage. 5. Check if valve is mechanically jammed. 6 Turn ignition on off to clear code. 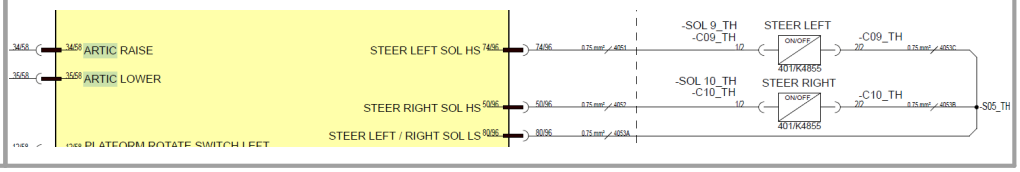

5.1.84 B1090-13

Error code:	B1090-13
ECU	Base ECU

© 2026 JCB INDIA LTD

Description :	STEER RIGHT OR LEFT DIRECTIONAL Solenoid Valve High Side & Low Side Open Circuit
Component :	STEER RIGHT OR LEFT DIRECTIONAL Solenoid Valve
Vehicle reaction:	Detect failure mode with Safout method - Switch Steer output to off
Possible Cause:	1. Poor or loose connection 2. Break in wiring 3. Water in connector 4. Broken pin or connector 5. Faulty or Damage solenoid
Service Action:	1.Check coil resistance 5-10 ohms 2. Check wiring from coil to ECU wire 4051,4052 & 4053A, 4053B, 4053C for cut, pinch or and damage. 3. Check ECU Pin 74/96, 50/96, 80/96 for bend or back out or any damage. 4. Check solenoid connector C09_TH and C10_TH for loose connection or any damage. 5. Check if valve is mechanically jammed. 6 Turn ignition on off to clear code. 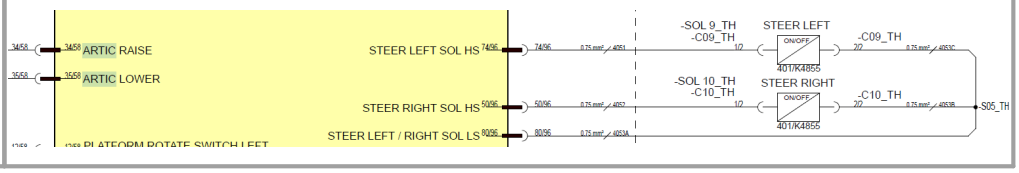

5.1.85 B1091-17

Error code:	**B1091-17**
ECU	Base ECU
Description :	STEER RIGHT OR LEFT DIRECTIONAL Solenoid Valve Fault.
Component :	STEER RIGHT OR LEFT DIRECTIONAL Solenoid Valve
Vehicle reaction:	Detect failure mode with Safout method - Switch Steer output to off
Possible Cause:	1. Poor or loose connection 2. Break in wiring

© 2026 JCB INDIA LTD

	3. Water in connector 4. Broken pin or connector 5. Faulty or Damage solenoid
Service Action:	1.Check coil resistance 5-10 ohms 2. Check wiring from coil to ECU wire 4051,4052 & 4053A, 4053B, 4053C for cut, pinch or and damage. 3. Check ECU Pin 74/96, 50/96, 80/96 for bend or back out or any damage. 4. Check solenoid connector C09_TH and C10_TH for loose connection or any damage. 5. Check if valve is mechanically jammed. 6 Turn ignition on off to clear code. 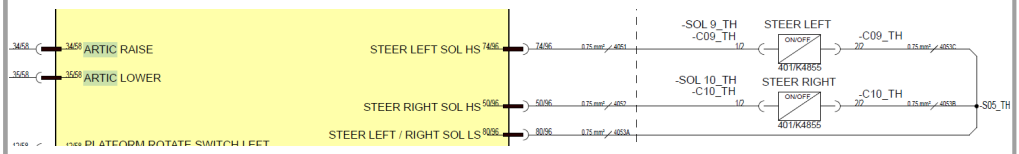

5.1.86 B1092-17

Error code:	**B1092-17**
ECU	Base ECU
Description:	ARTICULATED BOOM RAISE OR LOWER DIRECTIONAL Solenoid Valve High Side Short Circuit to High
Component:	ARTICULATED BOOM RAISE OR LOWER DIRECTIONAL Solenoid Valve
Vehicle reaction:	Disable articulated boom outputs
Possible Cause:	1. Poor or loose connection 2. Break in wiring 3. Water in connector 4. Broken pin or connector 5. Faulty or Damage solenoid
Service Action:	1. Check coil resistance 5-10 ohms 2. Check wiring from coil to ECU wire 4042,4043 & 4044A, 4044B, 4044C for cut, pinch or and damage. 3. Check ECU Pin 53/96, 77/96, 88/96 for bend or back out or any damage.

© 2026 JCB INDIA LTD

	4. Check solenoid connector C01_TH and C02_TH for loose connection or any damage. 5. Check if valve is mechanically jammed 6.Turn ignition on off to clear code 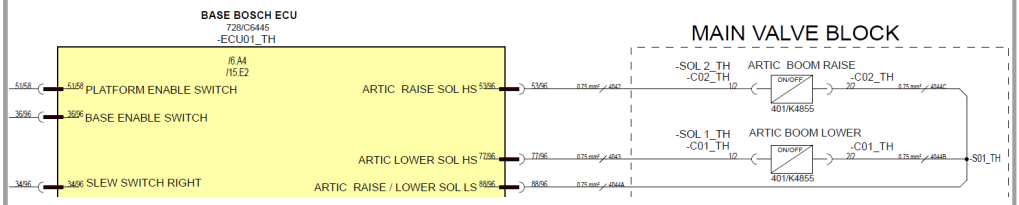

5.1.87 B1093-16

Error code:	**B1093-16**
ECU	Base ECU
Description:	ARTICULATED BOOM RAISE OR LOWER DIRECTIONAL Solenoid Valve High Side Short Circuit to Low
Component:	ARTICULATED BOOM RAISE OR LOWER DIRECTIONAL Solenoid Valve
Vehicle reaction:	Disable articulated boom outputs
Possible Cause:	1. Poor or loose connection 2. Break in wiring 3. Water in connector 4. Broken pin or connector 5. Faulty or Damage solenoid
Service Action:	1. Check coil resistance 5-10 ohms 2. Check wiring from coil to ECU wire 4042,4043 & 4044A, 4044B, 4044C for cut, pinch or and damage. 3. Check ECU Pin 53/96, 77/96, 88/96 for bend or back out or any damage. 4. Check solenoid connector C01_TH and C02_TH for loose connection or any damage. 5. Check if valve is mechanically jammed 6.Turn ignition on off to clear code

© 2026 JCB INDIA LTD

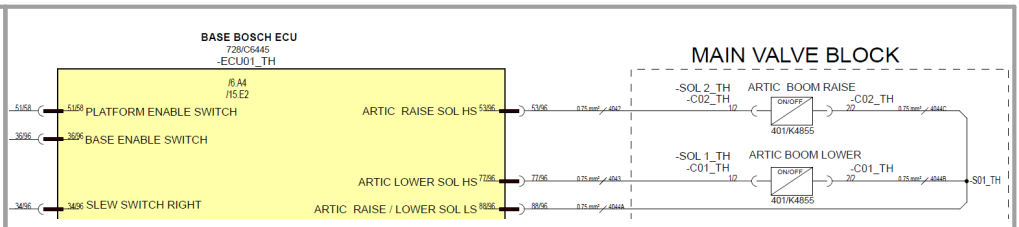

5.1.88 B1094-13

Error code:	B1094-13
ECU	Base ECU
Description:	ARTICULATED BOOM RAISE OR LOWER DIRECTIONAL Solenoid Valve High Side & Low Side Open Circuit
Component:	ARTICULATED BOOM RAISE OR LOWER DIRECTIONAL Solenoid Valve
Vehicle reaction:	Disable articulated boom outputs
Possible Cause:	1. Poor or loose connection 2. Break in wiring 3. Water in connector 4. Broken pin or connector 5. Faulty or Damage solenoid
Service Action:	1. Check coil resistance 5-10 ohms 2. Check wiring from coil to ECU wire 4042,4043 & 4044A, 4044B, 4044C for cut, pinch or and damage. 3. Check ECU Pin 53/96, 77/96, 88/96 for bend or back out or any damage. 4. Check solenoid connector C01_TH and C02_TH for loose connection or any damage. 5. Check if valve is mechanically jammed 6.Turn ignition on off to clear code 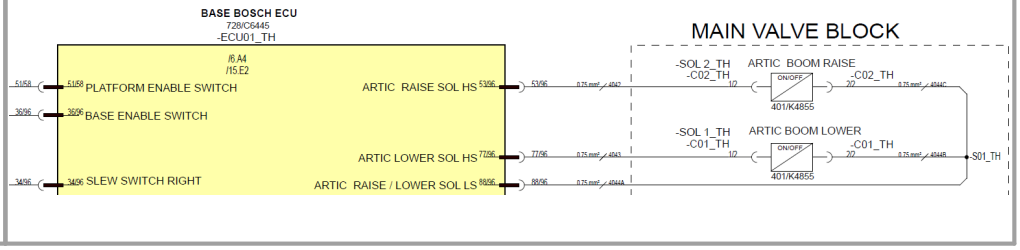

© 2026 JCB INDIA LTD

5.1.89 B1095-92

Error code:	B1095-92
ECU	Base ECU
Description:	ARTICULATED BOOM RAISE OR LOWER DIRECTIONAL Solenoid Valve Fault
Component:	ARTICULATED BOOM RAISE OR LOWER DIRECTIONAL Solenoid Valve
Vehicle reaction:	Disable articulated boom outputs
Possible Cause:	1. Poor or loose connection 2. Break in wiring 3. Water in connector 4. Broken pin or connector 5. Faulty or Damage solenoid
Service Action:	1. Check coil resistance 5-10 ohms 2. Check wiring from coil to ECU wire 4042,4043 & 4044A, 4044B, 4044C for cut, pinch or and damage. 3. Check ECU Pin 53/96, 77/96, 88/96 for bend or back out or any damage. 4. Check solenoid connector C01_TH and C02_TH for loose connection or any damage. 5. Check if valve is mechanically jammed 6.Turn ignition on off to clear code 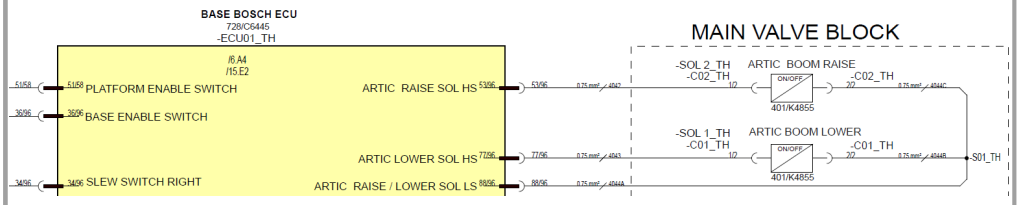

5.1.90 B1096-17

Error code:	B1096-17
ECU	Base ECU
Description:	ARTICULATED BOOM RAISE Switch Short Circuit to High

© 2026 JCB INDIA LTD

Component:	ARTICULATED BOOM RAISE Switch
Vehicle reaction:	Input from base control station will be disabled, output can still be operated from platform control station.
Possible Cause:	1. A short circuit within the wiring harness 2. A short circuit to the chassis 3. A short circuit within the harness connectors 4. Water damage/ingress within the harness connectors 5. Damaged component
Service Action:	1. Disconnect connector -C115-2_TCP from the rear of the ARTICULATED BOOM RAISE Switch on the Base Control Panel. Measure resistance from Terminal to GND. If a short exists, check wire #0054 to Base Bosch ECU pin 34/58. 2. Check Wire #0054 is not shorted to GND / Chassis. Check for abrasions and pinching. 3. Check condition of pins in Platform Bosch ECU. Check for Bent pins, debris or stray wires causing a short. 4. Check for water ingress in the Platform Bosch ECU Connectors. 5. Check Switch for damage or shorting to connector -C115-1_TCP 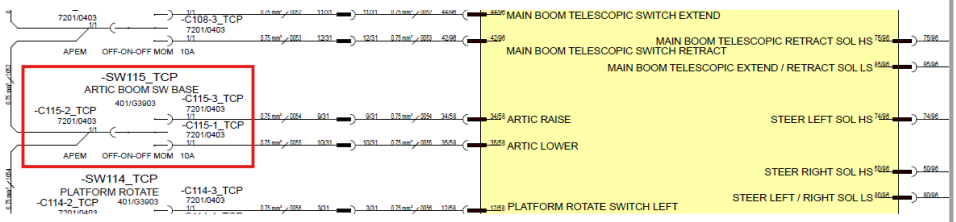

5.1.91 B1097-17

Error code:	**B1097-17**
ECU	Base ECU
Description:	ARTICULATED BOOM LOWER Switch Short Circuit to High

© 2026 JCB INDIA LTD

Component:	ARTICULATED BOOM LOWER Switch
Vehicle reaction:	Input from base control station will be disabled, output can still be operated from platform control station.
Possible Cause:	1. A short circuit within the wiring harness 2. A short circuit to the chassis 3. A short circuit within the harness connectors 4. Water damage/ingress within the harness connectors 5. Damaged component
Service Action:	1. Disconnect connector -C115-2_TCP from the rear of the ARTICULATED BOOM RAISE Switch on the Base Control Panel. Measure resistance from Terminal to GND. If a short exists, check wire #0055 to Base Bosch ECU pin 35/58. 2. Check Wire #0055 is not shorted to GND / Chassis. Check for abrasions and pinching. 3. Check condition of pins in Platform Bosch ECU. Check for Bent pins, debris or stray wires causing a short. 4. Check for water ingress in the Platform Bosch ECU Connectors. 5. Check Switch for damage or shorting to connector -C115-3_TCP 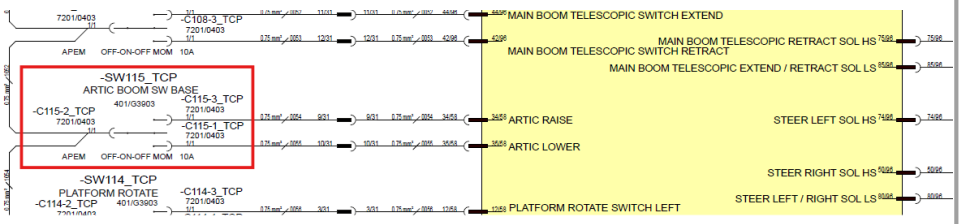

5.1.92 B1098-92

Error code:	**B1098-92**
ECU	Base ECU
Description:	ARTICULATED BOOM RAISE & LOWER Switches both activated (5 - 10V)

© 2026 JCB INDIA LTD

Component :	ARTICULATED BOOM RAISE & LOWER Switches
Vehicle reaction:	Input from base control station will be disabled, output can still be operated from platform control station.
Possible Cause:	1. A short circuit within the wiring harness 2. A short circuit to the chassis 3. A short circuit within the harness connectors 4. Water damage/ingress within the harness connectors 5. Damaged component
Service Action:	1. Disconnect connector -C115-2_TCP from the rear of the ARTICULATED BOOM RAISE Switch on the Base Control Panel. Measure resistance from Terminal to GND. If a short exists, check wire #0054 to Base Bosch ECU pin 34/58. 2. Check Wire #0054 is not shorted to GND / Chassis. Check for abrasions and pinching. 3. Disconnect connector -C115-2_TCP from the rear of the ARTICULATED BOOM RAISE Switch on the Base Control Panel. Measure resistance from Terminal to GND. If a short exists, check wire #0055 to Base Bosch ECU pin 35/58. 4. Check Wire #0055 is not shorted to GND / Chassis. Check for abrasions and pinching. 5. Check condition of pins in Base Bosch ECU. Check for Bent pins, debris or stray wires causing a short. 6. Check for water ingress in the Base Bosch ECU Connectors. 7. Check Switch for damage or shorting to connector -C115-1_TCP 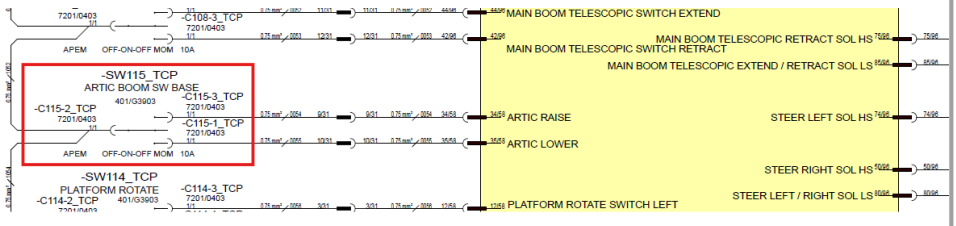

© 2026 JCB INDIA LTD

5.1.93 B1099-16

Error code:	B1099-16
ECU	Base ECU
Description:	ARTICULATED BOOM RAISE Switch Short Circuit to Low
Component:	ARTICULATED BOOM RAISE Switch
Vehicle reaction:	Input from base control station will be disabled, output can still be operated from platform control station.
Possible Cause:	1. A short circuit within the wiring harness 2. A short circuit to the chassis 3. A short circuit within the harness connectors 4. Water damage/ingress within the harness connectors 5. Damaged component
Service Action:	1. Disconnect connector -C115-2_TCP from the rear of the ARTICULATED BOOM RAISE Switch on the Base Control Panel. Measure resistance from Terminal to GND. If a short exists, check wire #0054 to Base Bosch ECU pin 34/58. 2. Check Wire #0054 is not shorted to GND / Chassis. Check for abrasions and pinching. 3. Check condition of pins in Base Bosch ECU. Check for Bent pins, debris or stray wires causing a short. 4. Check for water ingress in the Base Bosch ECU Connectors. 5. Check Switch for damage or shorting to connector -C115-1_TCP 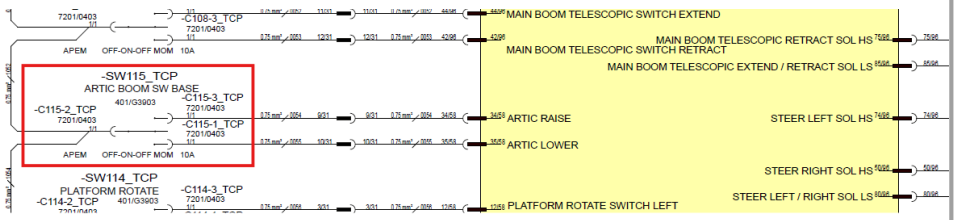

© 2026 JCB INDIA LTD

5.1.94 B1100-16

Error code:	B1100-16
ECU	Base ECU
Description:	ARTICULATED BOOM LOWER Switch Short Circuit to Low
Component:	ARTICULATED BOOM LOWER Switch
Vehicle reaction:	Input from base control station will be disabled, output can still be operated from platform control station.
Possible Cause:	1. A short circuit within the wiring harness 2. A short circuit to the chassis 3. A short circuit within the harness connectors 4. Water damage/ingress within the harness connectors 5. Damaged component
Service Action:	1. Disconnect connector -C115-2_TCP from the rear of the ARTICULATED BOOM RAISE Switch on the Base Control Panel. Measure resistance from Terminal to GND. If a short exists, check wire #0055 to Base Bosch ECU pin 35/58. 2. Check Wire #0055 is not shorted to GND / Chassis. Check for abrasions and pinching. 3. Check condition of pins in Base Bosch ECU. Check for Bent pins, debris or stray wires causing a short. 4. Check for water ingress in the Base Bosch ECU Connectors. 5. Check Switch for damage or shorting to connector -C115-3_TCP 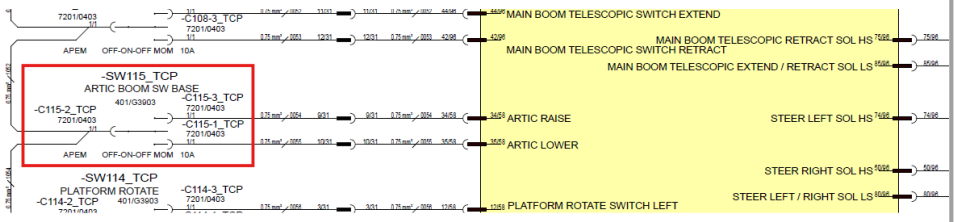

© 2026 JCB INDIA LTD

5.1.95 B1101-17

Error code:	B1101-17
ECU	Base ECU
Description:	MAIN BOOM EXTEND Switch Short Circuit to High
Component:	Telescopic Switch
Vehicle reaction:	Before operation: Ignore the input (but not output as it can be operated from where there is no fault) After operation: Refer to 10V System Short Circuit Fault reaction
Possible Cause:	1. A short circuit within the wiring harness 2. A short circuit within the harness connectors 3. Water damage/ingress within the harness connectors 4. Damaged component
Service Action:	1. Measure voltage at Base Main Boom Telescope Extend terminal, -C108-1_TCP. With switch not pressed, terminal voltage should be approx 2.5-3.0V. With switch pressed, voltage should rise to 10V. If Voltage at terminal is constant 10V or higher, then there is a short to high either at the switch, wiring harness or at the Base Bosch ECU connectors. If voltage is high, remove -C108-2_TCP, if voltage now drops, then switch is faulty, else, the fault is at the harness to the Bosch ECU. 2. Check Base Bosch ECU Connectors for bent pins or stray wires that are potentially causing a short circuit. 3. Check connectors for any sign of water ingress. 4. Check function of switch, check wiring from switch to ECU, checking for abrasions and pinching or any form of damage.

© 2026 JCB INDIA LTD



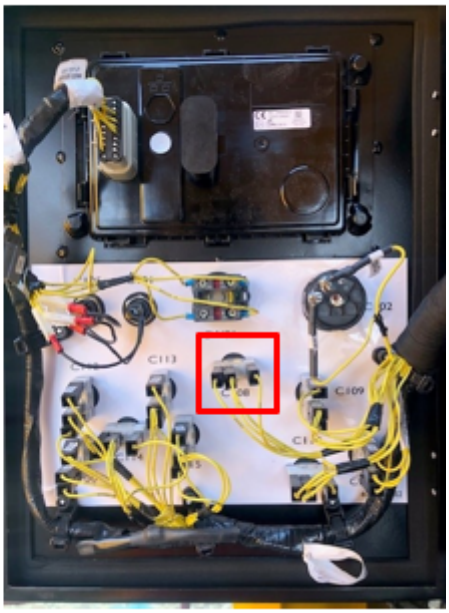

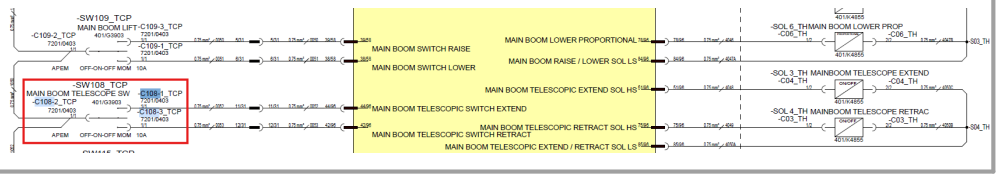

5.1.96 B1102-17

Error code:	B1102-17
ECU	Base ECU
Description:	MAIN BOOM RETRACT Switch Short Circuit to High
Component:	Telescopic Switch
Vehicle reaction:	Before operation: Ignore the input (but not output as it can be operated from where there is no fault) After operation: Refer to 10V System Short Circuit Fault reaction
Possible Cause:	1. A short circuit within the wiring harness 2. A short circuit within the harness connectors 3. Water damage/ingress within the harness connectors 4. Damaged component

© 2026 JCB INDIA LTD

Service Action:	1. Measure voltage at Base Main Boom Telescope Retract terminal, -C108-3_TCP. With switch not pressed, terminal voltage should be approx 2.5-3.0V. With switch pressed, voltage should rise to 10V. If Voltage at terminal is constant 10V or higher, then there is a short to high either at the switch, wiring harness or at the Base Bosch ECU connectors. If voltage is high, remove -C108-2_TCP, if voltage now drops, then switch is faulty, else, the fault is at the harness to the Bosch ECU. 2. Check Base Base Bosch ECU Connectors for bent pins or stray wires that are potentially causing a short circuit. 3. Check connectors for any sign of water ingress. 4. Check function of switch, check wiring from switch to ECU, checking for abrasions and pinching or any form of damage.  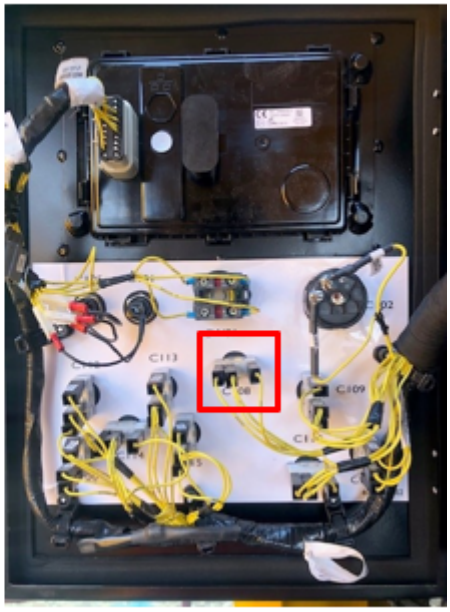 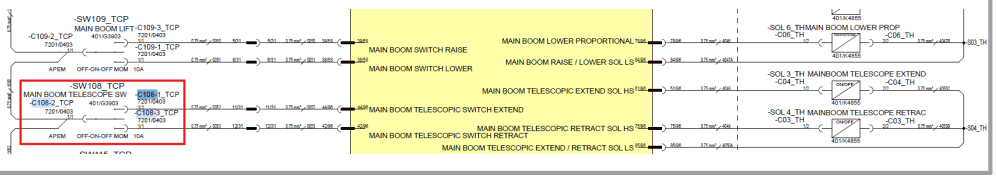

5.1.97 **B1103-92**

Error code:	**B1103-92**
ECU	Base ECU

© 2026 JCB INDIA LTD

Description:	MAIN BOOM EXTEND & RETRACT Switches both activated (5 - 10V)
Component:	Telescopic Switch
Vehicle reaction:	Ignore the input (but not output as it can be operated from where there is no fault)
Possible Cause:	1. A short circuit within the wiring harness 2. A short circuit within the harness connectors 3. Water damage/ingress within the harness connectors 4. Damaged component
Service Action:	1. Measure voltage at Base Main Boom Telescope Extend/Retract &Lower terminals, -C108-1_TCP & -C108-3_TCP. With switch not pressed, terminal voltage should be approx 2.5-3.0V. With switch pressed, voltage should rise to 10V. If Voltage at terminal is constant 10V or higher, then there is a short to high either at the switch, wiring harness or at the Base Bosch ECU connectors (Pins 9/58 & 10/58). If voltage is high, remove -C108-2_TCP, if voltage now drops, then switch is faulty, else, the fault is at the harness to the Bosch ECU. 2. Check Base Base Bosch ECU Connectors for bent pins or stray wires that are potentially causing a short circuit. 3. Check connectors for any sign of water ingress. 4. Check function of switch, check wiring from switch to ECU, checking for abrasions and pinching or any form of damage.

© 2026 JCB INDIA LTD



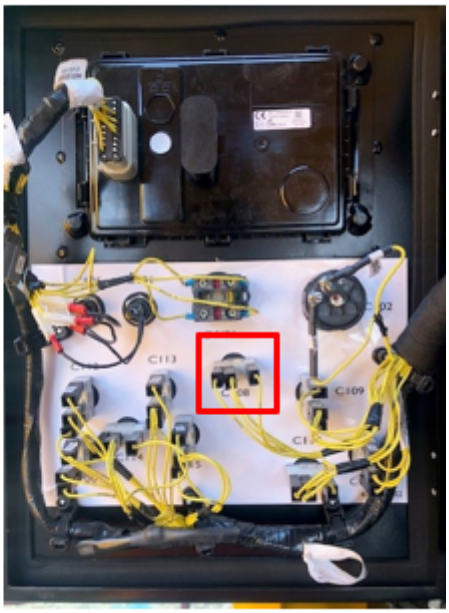

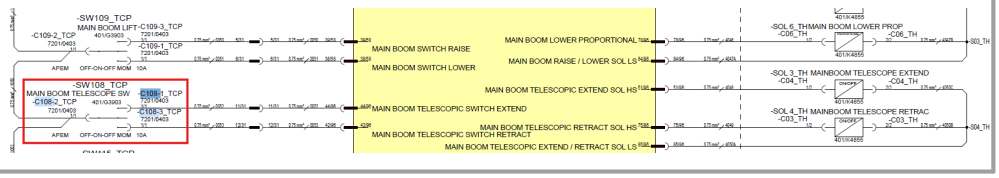

5.1.98 B1104-16

Error code:	B1104-16
ECU	Base ECU
Description:	MAIN BOOM EXTEND Switch Short Circuit to Low
Component:	Telescopic Switch
Vehicle reaction:	Before operation: Ignore the input (but not output as it can be operated from where there is no fault) After operation: Refer to 10V System Short Circuit Fault reaction
Possible Cause:	1. A short circuit within the wiring harness 2. A short circuit to the chassis 3. A short circuit within the harness connectors 4. Water damage/ingress within the harness connectors 5. Damaged component

© 2026 JCB INDIA LTD

Service Action:	1. Measure voltage at Base Main Boom Telescope Extend terminal, -C108-1_TCP. With switch not pressed, terminal voltage should be approx 2.5-3.0V. With switch pressed, voltage should rise to 10V. If Voltage at terminal is constantly <2.4V or lower, then there is a short to GND either at the switch, wiring harness or at the Base Bosch ECU connectors. If voltage is Low, remove -C108-2_TCP, if voltage now rises to ~2.5V, then switch is faulty, else, the fault is at the harness to the Bosch ECU. 2. Check there are no visible defects in the wiring causing a short circuit to chassis / GND 3. Check Base Base Bosch ECU Connectors for bent pins or stray wires that are potentially causing a short circuit. 4. Check connectors for any sign of water ingress. 5. Check function of switch, check wiring from switch to ECU, checking for abrasions and pinching or any form of damage.  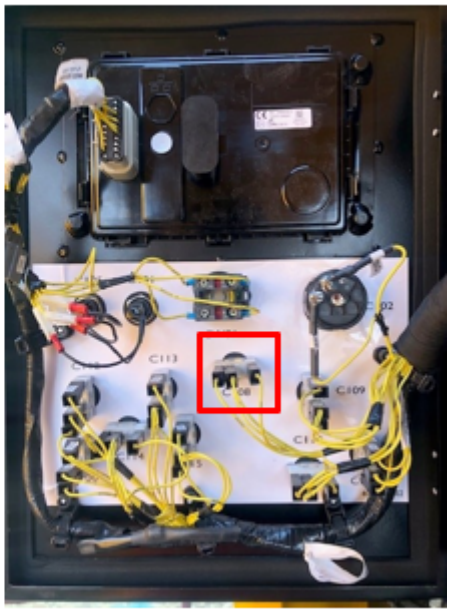 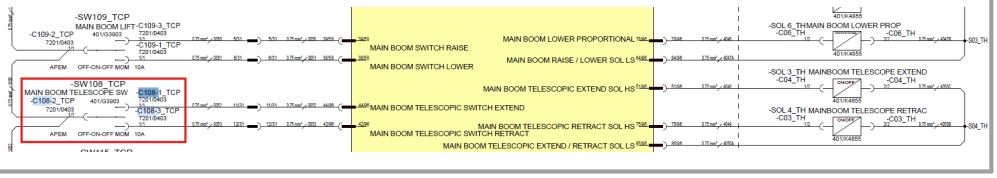

© 2026 JCB INDIA LTD

5.1.99 B1105-16

Error code:	B1105-16
ECU	Base ECU
Description:	MAIN BOOM RETRACT Switch Short Circuit to Low
Component:	Telescopic Switch
Vehicle reaction:	Before operation: Ignore the input (but not output as it can be operated from where there is no fault) After operation: Refer to 10V System Short Circuit Fault reaction
Possible Cause:	1. A short circuit within the wiring harness 2. A short circuit to the chassis 3. A short circuit within the harness connectors 4. Water damage/ingress within the harness connectors 5. Damaged component
Service Action:	1. Measure voltage at Base Main Boom Telescope Retract terminal, -C108-3_TCP. With switch not pressed, terminal voltage should be approx 2.5-3.0V. With switch pressed, voltage should rise to 10V. If Voltage at terminal is constantly <2.4V or lower, then there is a short to GND either at the switch, wiring harness or at the Base Bosch ECU connectors. If voltage is Low, remove -C108-2_TCP, if voltage now rises to ~2.5V, then switch is faulty, else, the fault is at the harness to the Bosch ECU. 2. Check there are no visible defects in the wiring causing a short circuit to chassis / GND 3. Check Base Base Bosch ECU Connectors for bent pins or stray wires that are potentially causing a short circuit. 4. Check connectors for any sign of water ingress. 5. Check function of switch, check wiring from switch to ECU, checking for abrasions and pinching or any form of damage.

© 2026 JCB INDIA LTD



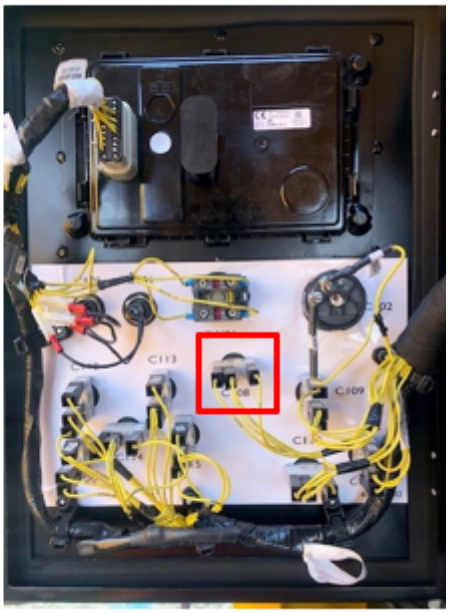

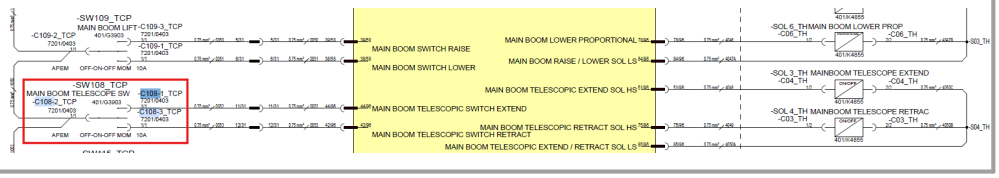

5.1.100 B1106-17

Error code:	B1106-17
ECU	Base ECU
Description:	PLATFORM ROTATE RIGHT Switch Short Circuit to High
Component:	Platform Rotate Switch
Vehicle reaction:	Before operation: Ignore the input (but not output as it can be operated from where there is no fault) After operation: Refer to 10V System Short Circuit Fault reaction
Possible Cause:	1. A short circuit within the wiring harness 2. A short circuit within the harness connectors 3. Water damage/ingress within the harness connectors 4. Damaged component

© 2026 JCB INDIA LTD

Service Action:	1. Measure voltage at Base Platform Rotate terminal, -C114-1_TCP. With switch not pressed, terminal voltage should be approx 2.5-3.0V. With switch pressed, voltage should rise to 10V. If Voltage at terminal is constant 10V or higher, then there is a short to high either at the switch, wiring harness or at the Base Bosch ECU connectors. If voltage is high, remove -C114-2_TCP, if voltage now drops, then switch is faulty, else, the fault is at the harness to the Bosch ECU. 2. Check Base Bosch ECU Connectors for bent pins or stray wires that are potentially causing a short circuit. 3. Check connectors for any sign of water ingress. 4. Check function of switch, check wiring from switch to ECU, checking for abrasions and pinching or any form of damage.  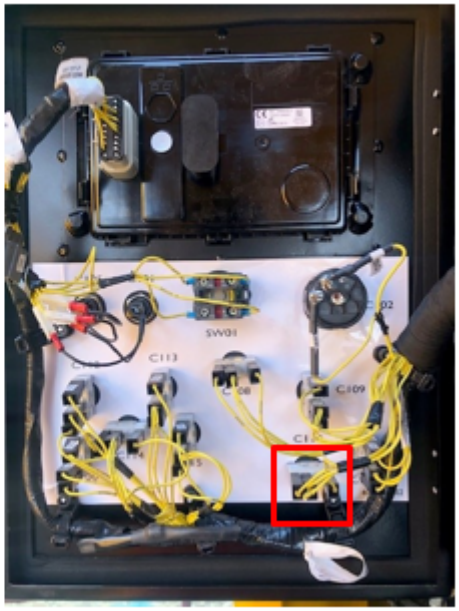 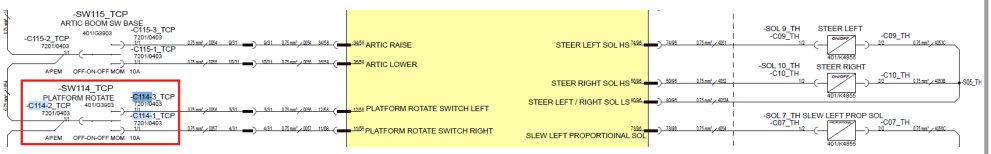

5.1.101 **B1107-17**

Error code:	**B1107-17**

© 2026 JCB INDIA LTD

ECU	Base ECU
Description:	PLATFORM ROTATE LEFT Switch Short Circuit to High
Component:	Platform Rotate Switch
Vehicle reaction:	Before operation: Ignore the input (but not output as it can be operated from where there is no fault) After operation: Refer to 10V System Short Circuit Fault reaction
Possible Cause:	1. A short circuit within the wiring harness 2. A short circuit within the harness connectors 3. Water damage/ingress within the harness connectors 4. Damaged component
Service Action:	1. Measure voltage at Base Platform Rotate terminal, -C114-3_TCP. With switch not pressed, terminal voltage should be approx 2.5-3.0V. With switch pressed, voltage should rise to 10V. If Voltage at terminal is constant 10V or higher, then there is a short to high either at the switch, wiring harness or at the Base Bosch ECU connectors. If voltage is high, remove -C114-2_TCP, if voltage now drops, then switch is faulty, else, the fault is at the harness to the Bosch ECU. 2. Check Base Base Bosch ECU Connectors for bent pins or stray wires that are potentially causing a short circuit. 3. Check connectors for any sign of water ingress. 4. Check function of switch, check wiring from switch to ECU, checking for abrasions and pinching or any form of damage.

© 2026 JCB INDIA LTD



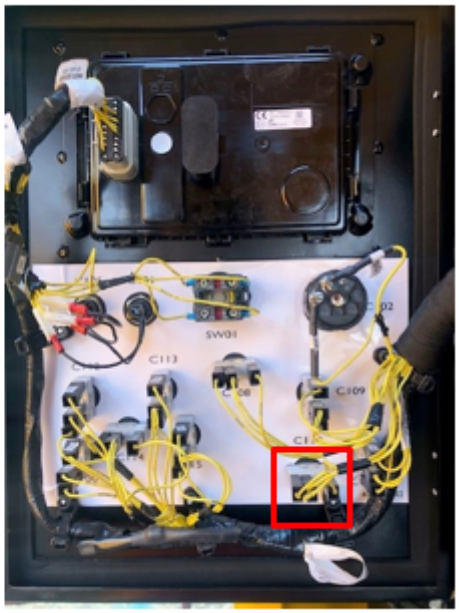

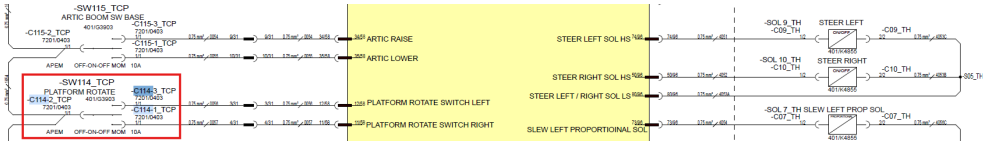

5.1.102 B1108-92

Error code:	B1108-92
ECU	Base ECU
Description:	PLATFORM ROTATE RIGHT & LEFT Switches both activated (5 - 10V)
Component:	Platform Rotate Switch
Vehicle reaction:	Ignore the input (but not output as it can be operated from where there is no fault)
Possible Cause:	1. A short circuit within the wiring harness 2. A short circuit within the harness connectors 3. Water damage/ingress within the harness connectors 4. Damaged component

© 2026 JCB INDIA LTD

Service Action:	1. Measure voltage at Base Platform Rotate terminals, -C114-1_TCP & -C114-3_TCP. With switch not pressed, terminal voltage should be approx 2.5-3.0V. With switch pressed, voltage should rise to 10V. If Voltage at terminal is constant 10V or higher, then there is a short to high either at the switch, wiring harness or at the Base Bosch ECU connectors (Pins 11/58 & 12/58). If voltage is high, remove -C114-2_TCP, if voltage now drops, then switch is faulty, else, the fault is at the harness to the Bosch ECU. 2. Check Base Base Bosch ECU Connectors for bent pins or stray wires that are potentially causing a short circuit. 3. Check connectors for any sign of water ingress. 4. Check function of switch, check wiring from switch to ECU, checking for abrasions and pinching or any form of damage.  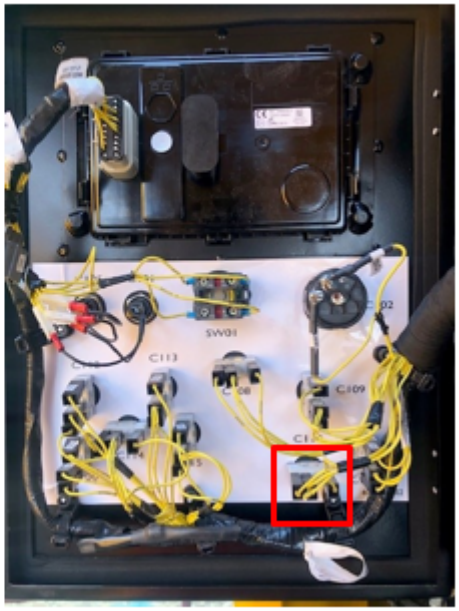 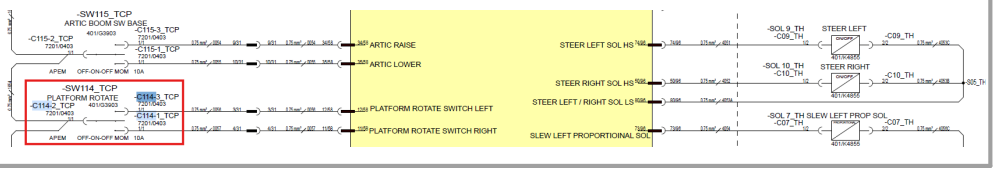

5.1.103 B1109-16

Error code:	**B1109-16**
ECU	Base ECU

© 2026 JCB INDIA LTD

Description:	PLATFORM ROTATE RIGHT Switch Short Circuit to Low
Component:	Platform Rotate Switch
Vehicle reaction:	Before operation: Ignore the input (but not output as it can be operated from where there is no fault) After operation: Refer to 10V System Short Circuit Fault reaction
Possible Cause:	1. A short circuit within the wiring harness 2. A short circuit to the chassis 3. A short circuit within the harness connectors 4. Water damage/ingress within the harness connectors 5. Damaged component
Service Action:	1. Measure voltage at Base Platform Rotate terminal, -C114-1_TCP. With switch not pressed, terminal voltage should be approx 2.5-3.0V. With switch pressed, voltage should rise to 10V. If Voltage at terminal is constantly <2.4V or lower, then there is a short to GND either at the switch, wiring harness or at the Base Bosch ECU connectors. If voltage is Low, remove -C114-2_TCP, if voltage now rises to ~2.5V, then switch is faulty, else, the fault is at the harness to the Bosch ECU. 2. Check there are no visible defects in the wiring causing a short circuit to chassis / GND 3. Check Base Base Bosch ECU Connectors for bent pins or stray wires that are potentially causing a short circuit. 4. Check connectors for any sign of water ingress. 5. Check function of switch, check wiring from switch to ECU, checking for abrasions and pinching or any form of damage.

© 2026 JCB INDIA LTD



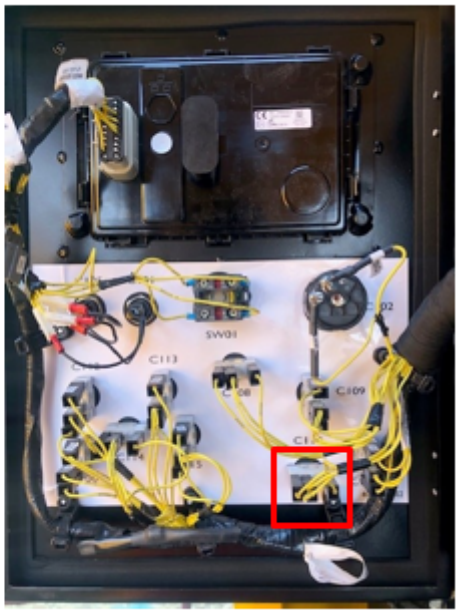



5.1.104 B1110-16

Error code:	B1110-16
ECU	Base ECU
Description:	PLATFORM ROTATE LEFT Switch Short Circuit to Low
Component:	Platform Rotate Switch
Vehicle reaction:	Before operation: Ignore the input (but not output as it can be operated from where there is no fault) After operation: Refer to 10V System Short Circuit Fault reaction
Possible Cause:	1. A short circuit within the wiring harness 2. A short circuit to the chassis 3. A short circuit within the harness connectors 4. Water damage/ingress within the harness connectors 5. Damaged component

© 2026 JCB INDIA LTD

Service Action:	1. Measure voltage at Base Platform Rotate terminal, -C114-3_TCP. With switch not pressed, terminal voltage should be approx 2.5-3.0V. With switch pressed, voltage should rise to 10V. If Voltage at terminal is constantly <2.4V or lower, then there is a short to GND either at the switch, wiring harness or at the Base Bosch ECU connectors. If voltage is Low, remove -C114-2_TCP, if voltage now rises to ~2.5V, then switch is faulty, else, the fault is at the harness to the Bosch ECU. 2. Check there are no visible defects in the wiring causing a short circuit to chassis / GND 3. Check Base Base Bosch ECU Connectors for bent pins or stray wires that are potentially causing a short circuit. 4. Check connectors for any sign of water ingress. 5. Check function of switch, check wiring from switch to ECU, checking for abrasions and pinching or any form of damage.  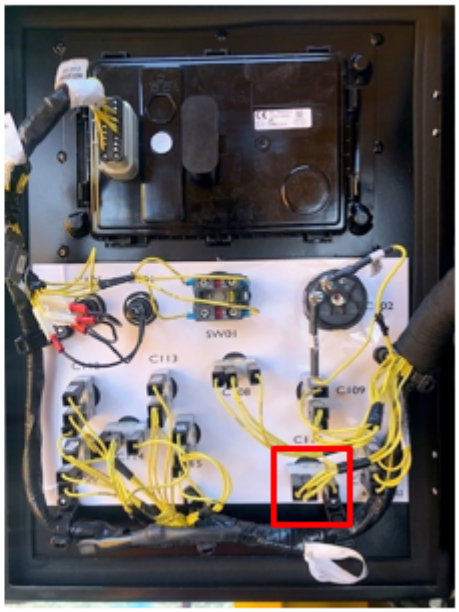 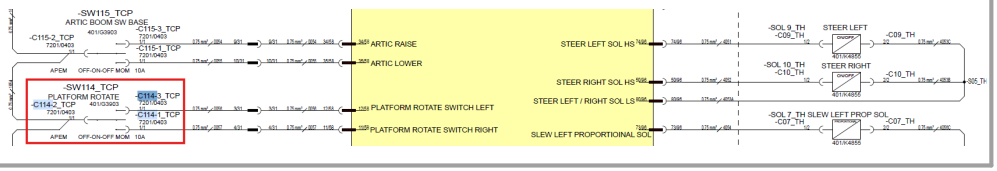

© 2026 JCB INDIA LTD

5.1.105 B1111-17

Error code:	B1111-17
ECU	Base ECU
Description:	JIB RAISE Switch Short Circuit to High
Component:	Jib Switch
Vehicle reaction:	Before operation: Ignore the input (but not output as it can be operated from where there is no fault) After operation: Refer to 10V System Short Circuit Fault reaction
Possible Cause:	1. A short circuit within the wiring harness 2. A short circuit within the harness connectors 3. Water damage/ingress within the harness connectors 4. Damaged component
Service Action:	1. Measure voltage at Base Jib Raise terminal, -C113-1_TCP. With switch not pressed, terminal voltage should be approx 2.5-3.0V. With switch pressed, voltage should rise to 10V. If Voltage at terminal is constant 10V or higher, then there is a short to high either at the switch, wiring harness or at the Base Bosch ECU connectors. If voltage is high, remove -C113-2_TCP, if voltage now drops, then switch is faulty, else, the fault is at the harness to the Bosch ECU. 2. Check Base Bosch ECU Connectors for bent pins or stray wires that are potentially causing a short circuit. 3. Check connectors for any sign of water ingress. 4. Check function of switch, check wiring from switch to ECU, checking for abrasions and pinching or any form of damage.

© 2026 JCB INDIA LTD



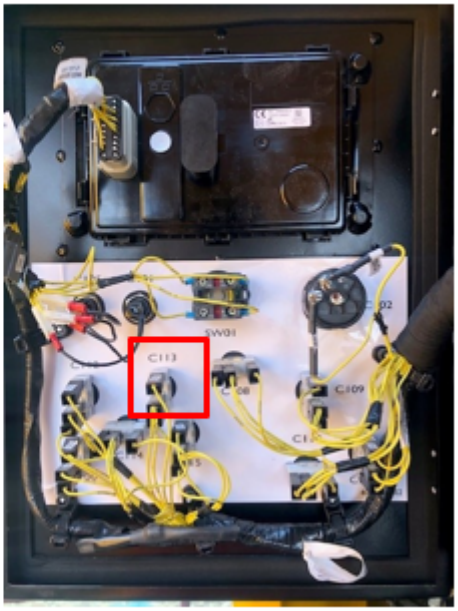

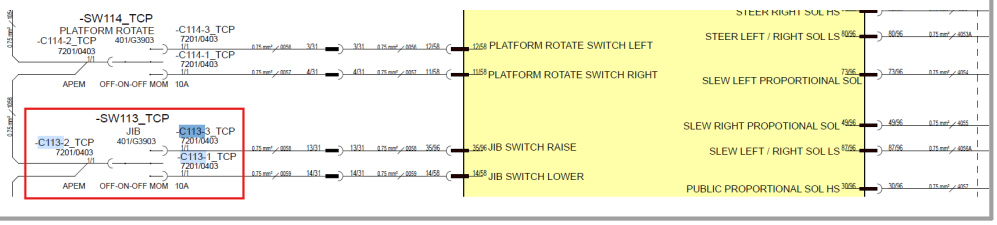

5.1.106 B1112-17

Error code:	B1112-17
ECU	Base ECU
Description:	Jib Lower Switch Short Circuit to High
Component:	Jib Switch
Vehicle reaction:	Before operation: Ignore the input (but not output as it can be operated from where there is no fault) After operation: Refer to 10V System Short Circuit Fault reaction
Possible Cause:	1. A short circuit within the wiring harness 2. A short circuit within the harness connectors 3. Water damage/ingress within the harness connectors 4. Damaged component

© 2026 JCB INDIA LTD

Service Action:	1. Measure voltage at Base Jib Lower terminal, -C113-3_TCP. With switch not pressed, terminal voltage should be approx 2.5-3.0V. With switch pressed, voltage should rise to 10V. If Voltage at terminal is constant 10V or higher, then there is a short to high either at the switch, wiring harness or at the Base Bosch ECU connectors. If voltage is high, remove -C113-2_TCP, if voltage now drops, then switch is faulty, else, the fault is at the harness to the Bosch ECU. 2. Check Base Base Bosch ECU Connectors for bent pins or stray wires that are potentially causing a short circuit. 3. Check connectors for any sign of water ingress. 4. Check function of switch, check wiring from switch to ECU, checking for abrasions and pinching or any form of damage



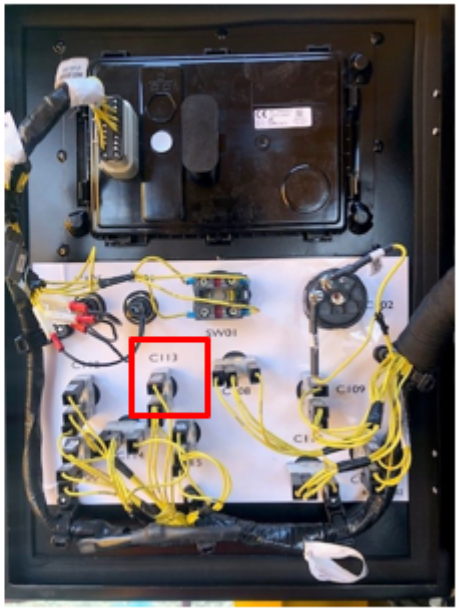

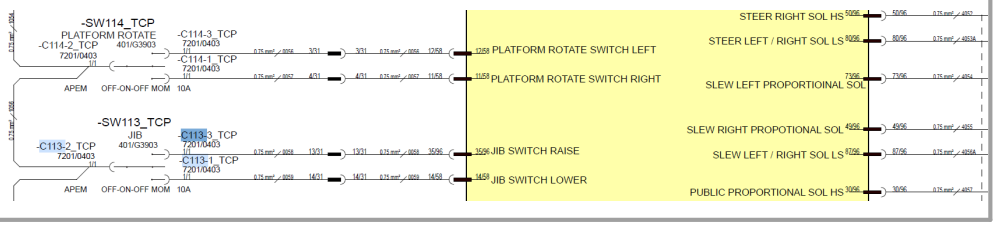

5.1.107 B1113-92

Error code:	**B1113-92**

© 2026 JCB INDIA LTD

ECU	Base ECU
Description:	JIB RAISE & LOWER Switches both activated (5 - 10V)
Component:	Jib Switch
Vehicle reaction:	Ignore the input (but not output as it can be operated from where there is no fault)
Possible Cause:	1. A short circuit within the wiring harness 2. A short circuit within the harness connectors 3. Water damage/ingress within the harness connectors 4. Damaged component
Service Action:	1. Measure voltage at Base Jib Switch terminals, -C113-1_TCP & -C113-3_TCP. With switch not pressed, terminal voltage should be approx 2.5-3.0V. With switch pressed, voltage should rise to 10V. If Voltage at terminal is constant 10V or higher, then there is a short to high either at the switch, wiring harness or at the Base Bosch ECU connectors (Pins 35/96 & 14/58). If voltage is high, remove -C113-2_TCP, if voltage now drops, then switch is faulty, else, the fault is at the harness to the Bosch ECU. 2. Check Base Base Bosch ECU Connectors for bent pins or stray wires that are potentially causing a short circuit. 3. Check connectors for any sign of water ingress. 4. Check function of switch, check wiring from switch to ECU, checking for abrasions and pinching or any form of damage.

© 2026 JCB INDIA LTD



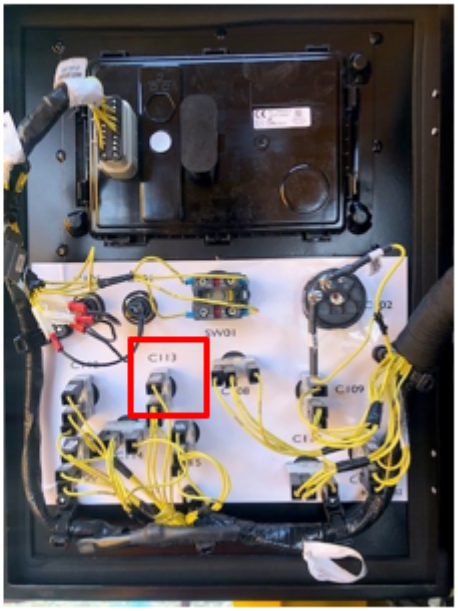

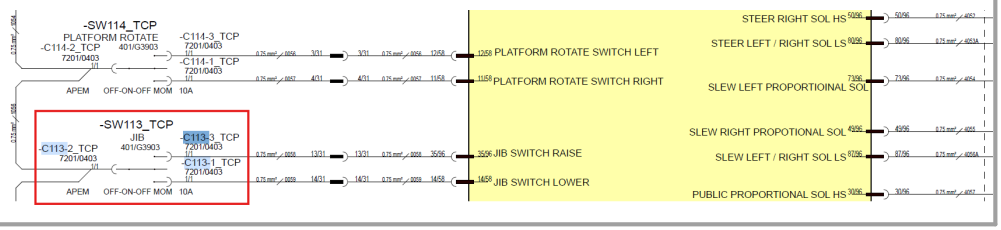

5.1.108 B1114-16

Error code:	B1114-16
ECU	Base ECU
Description:	Jib Raise Switch Short Circuit to Low
Component:	Jib Switch
Vehicle reaction:	Before operation: Ignore the input (but not output as it can be operated from where there is no fault) After operation: Refer to 10V System Short Circuit Fault reaction
Possible Cause:	1. A short circuit within the wiring harness 2. A short circuit to the chassis 3. A short circuit within the harness connectors 4. Water damage/ingress within the harness connectors

© 2026 JCB INDIA LTD

	5. Damaged component
Service Action:	1. Measure voltage at Base Jib Raise terminal, -C113-1_TCP. With switch not pressed, terminal voltage should be approx 2.5-3.0V. With switch pressed, voltage should rise to 10V. If Voltage at terminal is constantly <2.4V or lower, then there is a short to GND either at the switch, wiring harness or at the Base Bosch ECU connectors. If voltage is Low, remove -C113-2_TCP, if voltage now rises to ~2.5V, then switch is faulty, else, the fault is at the harness to the Bosch ECU. 2. Check there are no visible defects in the wiring causing a short circuit to chassis / GND 3. Check Base Base Bosch ECU Connectors for bent pins or stray wires that are potentially causing a short circuit. 4. Check connectors for any sign of water ingress. 5. Check function of switch, check wiring from switch to ECU, checking for abrasions and pinching or any form of damage.  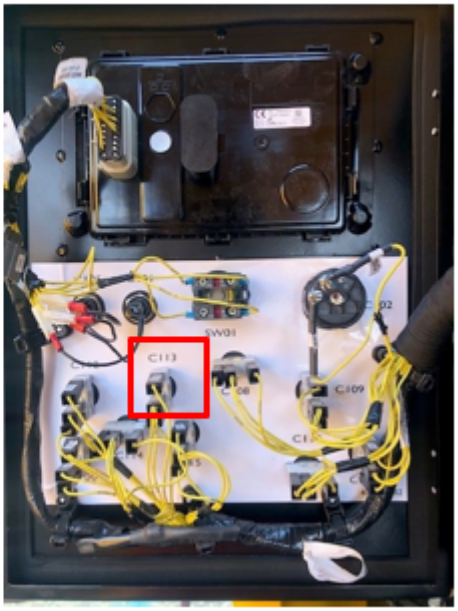 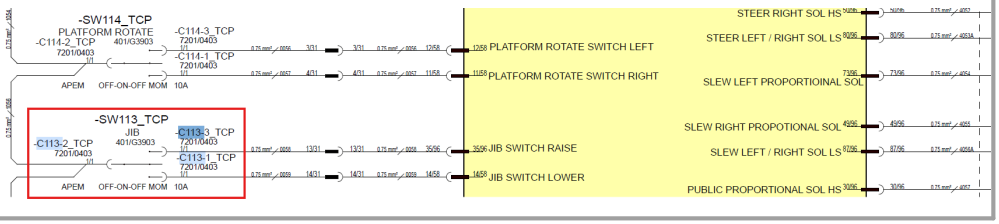

© 2026 JCB INDIA LTD

5.1.109 B1115-16

Error code:	B1115-16
ECU	Base ECU
Description:	Jib Lower Switch Short Circuit to Low
Component:	Jib Switch
Vehicle reaction:	Before operation: Ignore the input (but not output as it can be operated from where there is no fault) After operation: Refer to 10V System Short Circuit Fault reaction
Possible Cause:	1. A short circuit within the wiring harness 2. A short circuit to the chassis 3. A short circuit within the harness connectors 4. Water damage/ingress within the harness connectors 5. Damaged component
Service Action:	1. Measure voltage at Base Jib Lower terminal, -C113-3_TCP. With switch not pressed, terminal voltage should be approx 2.5-3.0V. With switch pressed, voltage should rise to 10V. If Voltage at terminal is constantly <2.4V or lower, then there is a short to GND either at the switch, wiring harness or at the Base Bosch ECU connectors. If voltage is Low, remove -C113-2_TCP, if voltage now rises to ~2.5V, then switch is faulty, else, the fault is at the harness to the Bosch ECU. 2. Check there are no visible defects in the wiring causing a short circuit to chassis / GND 3. Check Base Base Bosch ECU Connectors for bent pins or stray wires that are potentially causing a short circuit. 4. Check connectors for any sign of water ingress. 5. Check function of switch, check wiring from switch to ECU, checking for abrasions and pinching or any form of damage.

© 2026 JCB INDIA LTD



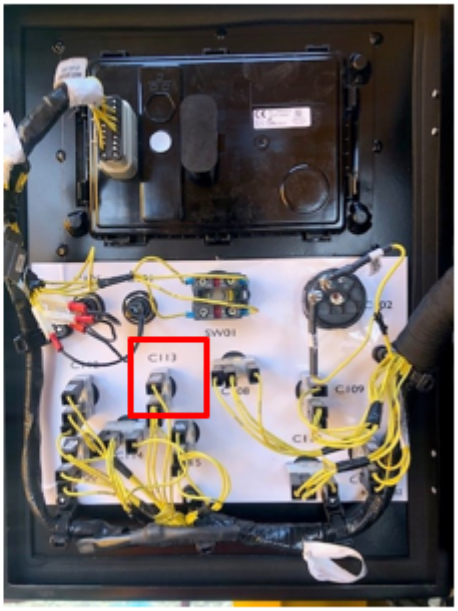

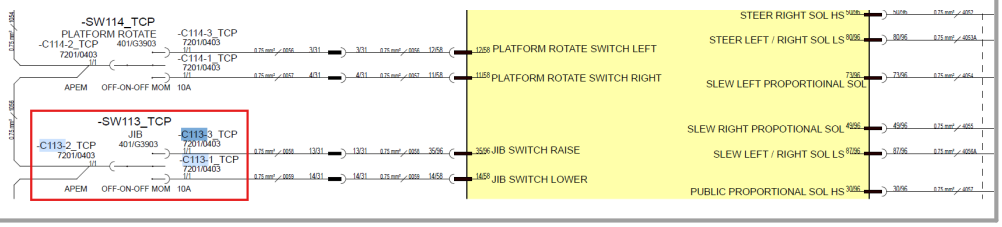

5.1.110 B1116-17

Error code:	B1116-17
ECU	Base ECU
Description:	MAIN BOOM RAISE (BASE) Switch Short Circuit to High
Component:	Main Boom Switch
Vehicle reaction:	Before operation: Ignore the input (but not output as it can be operated from where there is no fault) After operation: Refer to 10V System Short Circuit Fault reaction
Possible Cause:	1. A short circuit within the wiring harness 2. A short circuit within the harness connectors 3. Water damage/ingress within the harness connectors

© 2026 JCB INDIA LTD

	4. Damaged component
Service Action:	1. Measure voltage at Base Main Boom Raise terminal, -C109-1_TCP. With switch not pressed, terminal voltage should be approx 2.5-3.0V. With switch pressed, voltage should rise to 10V. If Voltage at terminal is constant 10V or higher, then there is a short to high either at the switch, wiring harness or at the Base Bosch ECU connectors. If voltage is high, remove -C109-2_TCP, if voltage now drops, then switch is faulty, else, the fault is at the harness to the Bosch ECU. 2. Check Base Bosch ECU Connectors for bent pins or stray wires that are potentially causing a short circuit. 3. Check connectors for any sign of water ingress. 4. Check function of switch, check wiring from switch to ECU, checking for abrasions and pinching or any form of damage.  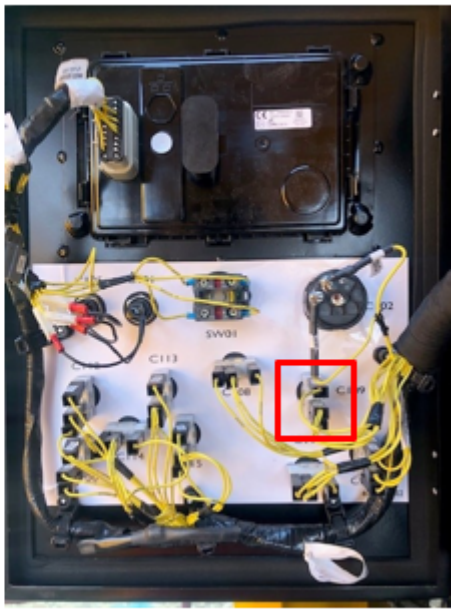 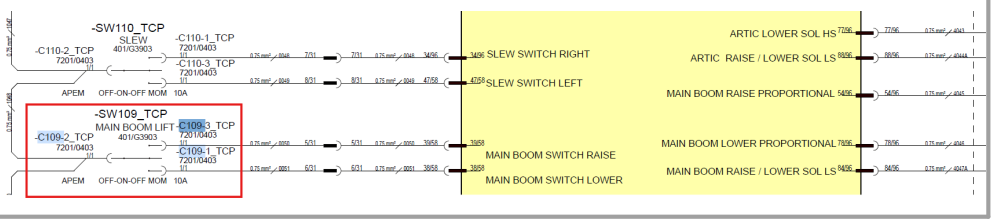

© 2026 JCB INDIA LTD

5.1.111 B1117-17

Error code:	B1117-17
ECU	Base ECU
Description:	MAIN BOOM LOWER (BASE) Switch Short Circuit to High
Component:	Main Boom Switch
Vehicle reaction:	Before operation: Ignore the input (but not output as it can be operated from where there is no fault) After operation: Refer to 10V System Short Circuit Fault reaction
Possible Cause:	1. A short circuit within the wiring harness 2. A short circuit within the harness connectors 3. Water damage/ingress within the harness connectors 4. Damaged component
Service Action:	1. Measure voltage at Base Main Boom Lower terminal, -C109-3_TCP. With switch not pressed, terminal voltage should be approx 2.5-3.0V. With switch pressed, voltage should rise to 10V. If Voltage at terminal is constant 10V or higher, then there is a short to high either at the switch, wiring harness or at the Base Bosch ECU connectors. If voltage is high, remove -C109-2_TCP, if voltage now drops, then switch is faulty, else, the fault is at the harness to the Bosch ECU. 2. Check Base Base Bosch ECU Connectors for bent pins or stray wires that are potentially causing a short circuit. 3. Check connectors for any sign of water ingress. 4. Check function of switch, check wiring from switch to ECU, checking for abrasions and pinching or any form of damage

© 2026 JCB INDIA LTD



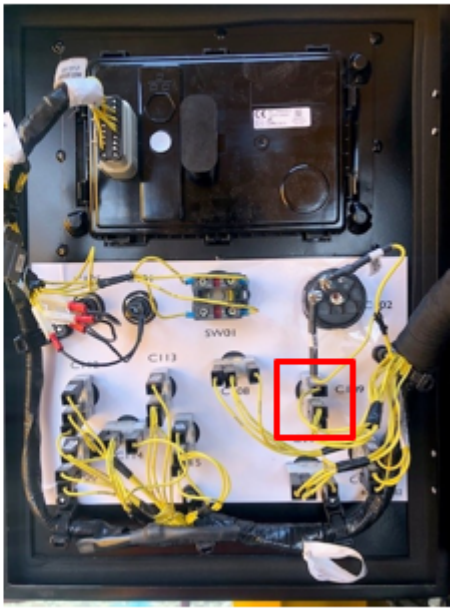

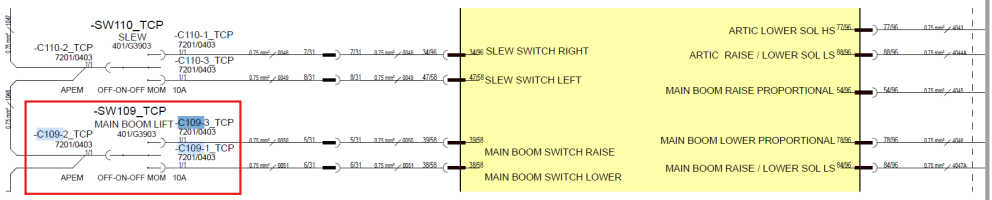

5.1.112 B1118-92

Error code:	B1118-92
ECU	Base ECU
Description:	MAIN BOOM RAISE & LOWER (BASE) Switches both activated (5 - 10V)
Component:	Main Boom Switch
Vehicle reaction:	Ignore the input (but not output as it can be operated from where there is no fault)
Possible Cause:	1. A short circuit within the wiring harness 2. A short circuit within the harness connectors 3. Water damage/ingress within the harness connectors 4. Damaged component

© 2026 JCB INDIA LTD

Service Action:	1. Measure voltage at Base Main Boom Raise/Lower Switch terminals, -C109-1_TCP & -C109-3_TCP. With switch not pressed, terminal voltage should be approx 2.5-3.0V. With switch pressed, voltage should rise to 10V. If Voltage at terminal is constant 10V or higher, then there is a short to high either at the switch, wiring harness or at the Base Bosch ECU connectors (Pins 39/58 & 38/58). If voltage is high, remove -C109-2_TCP, if voltage now drops, then switch is faulty, else, the fault is at the harness to the Bosch ECU. 2. Check Base Base Bosch ECU Connectors for bent pins or stray wires that are potentially causing a short circuit. 3. Check connectors for any sign of water ingress. 4. Check function of switch, check wiring from switch to ECU, checking for abrasions and pinching or any form of damage.   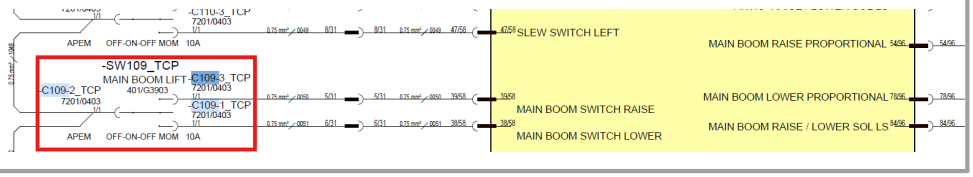

5.1.113 B1119-16

Error code:	**B1119-16**
ECU	Base ECU

© 2026 JCB INDIA LTD

Description:	MAIN BOOM RAISE (BASE) Switch Short Circuit to Low
Component:	Main Boom Switch
Vehicle reaction:	Before operation: Ignore the input (but not output as it can be operated from where there is no fault) After operation: Refer to 10V System Short Circuit Fault reaction
Possible Cause:	1. A short circuit within the wiring harness 2. A short circuit to the chassis 3. A short circuit within the harness connectors 4. Water damage/ingress within the harness connectors 5. Damaged component
Service Action:	1. Measure voltage at Base Main Boom Raise terminal, -C109-1_TCP. With switch not pressed, terminal voltage should be approx 2.5-3.0V. With switch pressed, voltage should rise to 10V. If Voltage at terminal is constantly <2.4V or lower, then there is a short to GND either at the switch, wiring harness or at the Base Bosch ECU connectors. If voltage is Low, remove -C109-2_TCP, if voltage now rises to ~2.5V, then switch is faulty, else, the fault is at the harness to the Bosch ECU. 2. Check there are no visible defects in the wiring causing a short circuit to chassis / GND 3. Check Base Base Bosch ECU Connectors for bent pins or stray wires that are potentially causing a short circuit. 4. Check connectors for any sign of water ingress. 5. Check function of switch, check wiring from switch to ECU, checking for abrasions and pinching or any form of damage

© 2026 JCB INDIA LTD



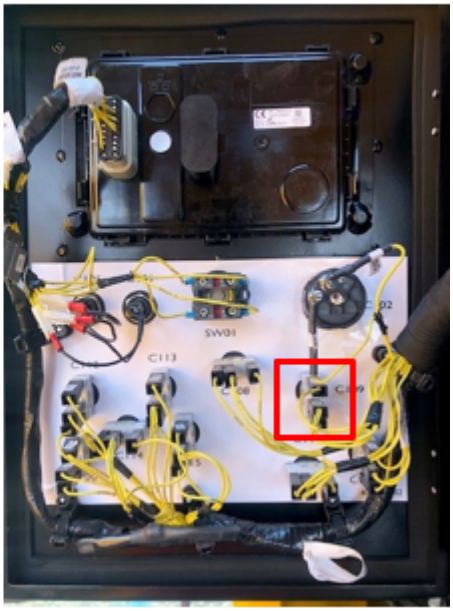

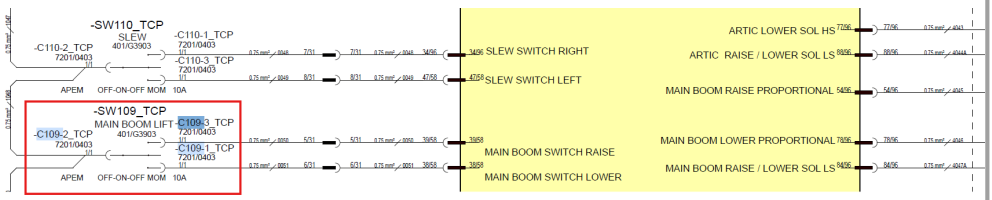

5.1.114 B1120-16

Error code:	B1120-16
ECU	Base ECU
Description:	MAIN BOOM LOWER (BASE) Switch Short Circuit to Low
Component:	Main Boom Switch
Vehicle reaction:	Before operation: Ignore the input (but not output as it can be operated from where there is no fault) After operation: Refer to 10V System Short Circuit Fault reaction
Possible Cause:	1. A short circuit within the wiring harness 2. A short circuit to the chassis 3. A short circuit within the harness connectors 4. Water damage/ingress within the harness connectors

© 2026 JCB INDIA LTD

	5. Damaged component
Service Action:	1. Measure voltage at Base Main Boom Raise terminal, -C109-1_TCP. With switch not pressed, terminal voltage should be approx 2.5-3.0V. With switch pressed, voltage should rise to 10V. If Voltage at terminal is constantly <2.4V or lower, then there is a short to GND either at the switch, wiring harness or at the Base Bosch ECU connectors. If voltage is Low, remove -C109-2_TCP, if voltage now rises to ~2.5V, then switch is faulty, else, the fault is at the harness to the Bosch ECU. 2. Check there are no visible defects in the wiring causing a short circuit to chassis / GND 3. Check Base Base Bosch ECU Connectors for bent pins or stray wires that are potentially causing a short circuit. 4. Check connectors for any sign of water ingress. 5. Check function of switch, check wiring from switch to ECU, checking for abrasions and pinching or any form of damage.  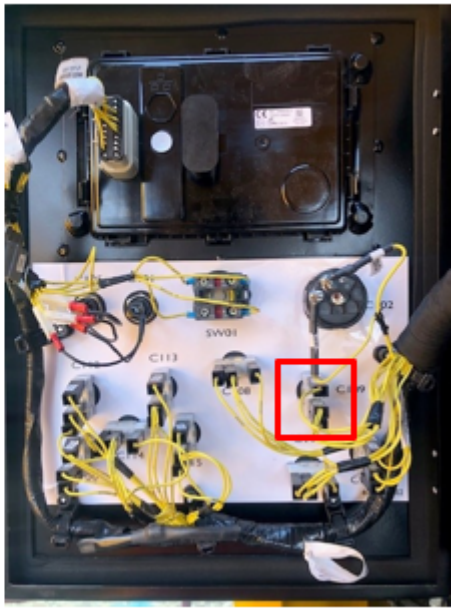 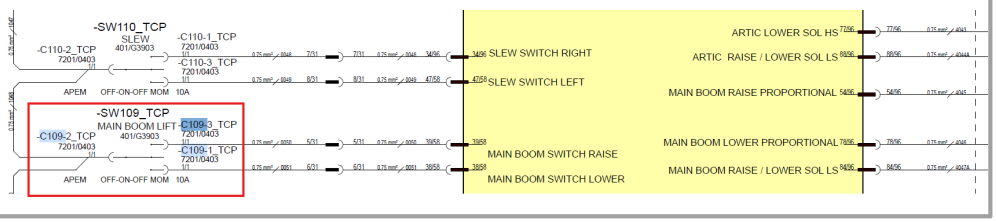

© 2026 JCB INDIA LTD

5.1.115 B1121-17

Error code:	B1121-17
ECU	Base ECU
Description:	SLEW RIGHT (BASE) Switch Short Circuit to High
Component:	Slew Switch
Vehicle reaction:	Before operation: Ignore the input (but not output as it can be operated from where there is no fault) After operation: Refer to 10V System Short Circuit Fault reaction
Possible Cause:	1. A short circuit within the wiring harness 2. A short circuit within the harness connectors 3. Water damage/ingress within the harness connectors 4. Damaged component
Service Action:	1. Measure voltage at Base Slew Right terminal, -C110-1_TCP. With switch not pressed, terminal voltage should be approx 2.5-3.0V. With switch pressed, voltage should rise to 10V. If Voltage at terminal is constant 10V or higher, then there is a short to high either at the switch, wiring harness or at the Base Bosch ECU connectors. If voltage is high, remove -C110-2_TCP, if voltage now drops, then switch is faulty, else, the fault is at the harness to the Bosch ECU. 2. Check Base Bosch ECU Connectors for bent pins or stray wires that are potentially causing a short circuit. 3. Check connectors for any sign of water ingress. 4. Check function of switch, check wiring from switch to ECU, checking for abrasions and pinching or any form of damage.

© 2026 JCB INDIA LTD



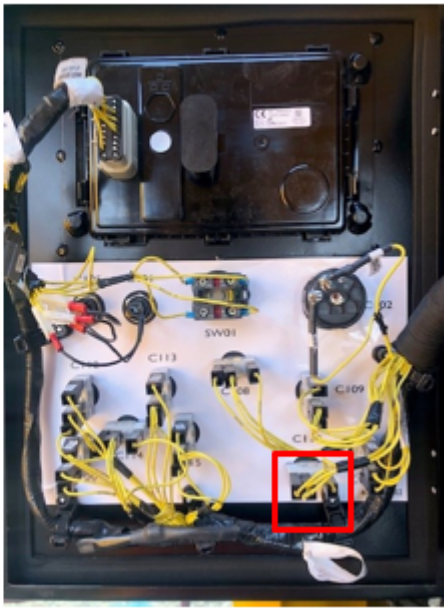

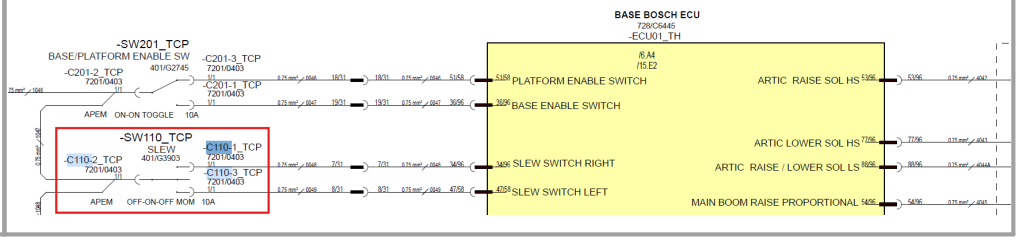

5.1.116 B1122-17

Error code:	B1122-17
ECU	Base ECU
Description:	SLEW LEFT (BASE) Switch Short Circuit to High
Component:	Slew Switch
Vehicle reaction:	Before operation: Ignore the input (but not output as it can be operated from where there is no fault) After operation: Refer to 10V System Short Circuit Fault reaction
Possible Cause:	1. A short circuit within the wiring harness 2. A short circuit within the harness connectors 3.Water damage/ingress within the harness connectors

© 2026 JCB INDIA LTD

	4. Damaged component
Service Action:	1. Measure voltage at Base Slew Left terminal, -C110-3_TCP. With switch not pressed, terminal voltage should be approx 2.5-3.0V. With switch pressed, voltage should rise to 10V. If Voltage at terminal is constant 10V or higher, then there is a short to high either at the switch, wiring harness or at the Base Bosch ECU connectors. If voltage is high, remove -C110-2_TCP, if voltage now drops, then switch is faulty, else, the fault is at the harness to the Bosch ECU. 2. Check Base Base Bosch ECU Connectors for bent pins or stray wires that are potentially causing a short circuit. 3. Check connectors for any sign of water ingress. 4. Check function of switch, check wiring from switch to ECU, checking for abrasions and pinching or any form of damage.  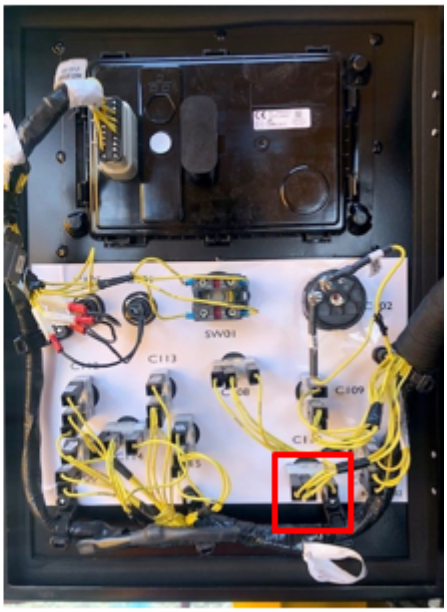 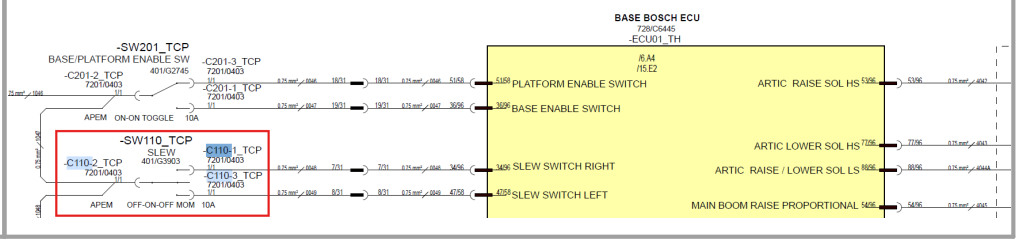

© 2026 JCB INDIA LTD

5.1.117 B1123-92

Error code:	B1123-92
ECU	Base ECU
Description:	SLEW RIGHT & LEFT (BASE) Switches both activated (5 - 10V)
Component:	Slew Switch
Vehicle reaction:	Ignore the input (but not output as it can be operated from where there is no fault)
Possible Cause:	1. A short circuit within the wiring harness 2. A short circuit within the harness connectors 3. Water damage/ingress within the harness connectors 4. Damaged component
Service Action:	1. Measure voltage at Base Slew Right/Left Switch terminals, -C110-1_TCP & -C110-3_TCP. With switch not pressed, terminal voltage should be approx 2.5-3.0V. With switch pressed, voltage should rise to 10V. If Voltage at terminal is constant 10V or higher, then there is a short to high either at the switch, wiring harness or at the Base Bosch ECU connectors (Pins 34/58 & 47/58). If voltage is high, remove -C110-2_TCP, if voltage now drops, then switch is faulty, else, the fault is at the harness to the Bosch ECU. 2. Check Base Base Bosch ECU Connectors for bent pins or stray wires that are potentially causing a short circuit. 3. Check connectors for any sign of water ingress. 4. Check function of switch, check wiring from switch to ECU, checking for abrasions and pinching or any form of damage.

© 2026 JCB INDIA LTD





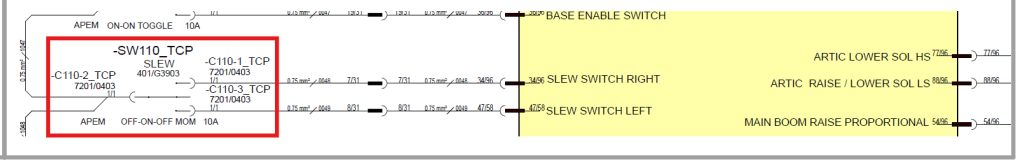

5.1.118 B1124-16

Error code:	B1124-16
ECU	Base ECU
Description:	SLEW RIGHT (BASE) Switch Short Circuit to Low
Component:	Slew Switch
Vehicle reaction:	Before operation: Ignore the input (but not output as it can be operated from where there is no fault) After operation: Refer to 10V System Short Circuit Fault reaction)
Possible Cause:	1. A short circuit within the wiring harness 2. A short circuit to the chassis 3. A short circuit within the harness connectors 4. Water damage/ingress within the harness connectors

© 2026 JCB INDIA LTD

	5. Damaged component
Service Action:	1. Measure voltage at Base Slew Right terminal, -C110-1_TCP. With switch not pressed, terminal voltage should be approx 2.5-3.0V. With switch pressed, voltage should rise to 10V. If Voltage at terminal is constantly <2.4V or lower, then there is a short to GND either at the switch, wiring harness or at the Base Bosch ECU connectors. If voltage is Low, remove -C110-2_TCP, if voltage now rises to ~2.5V, then switch is faulty, else, the fault is at the harness to the Bosch ECU. 2. Check there are no visible defects in the wiring causing a short circuit to chassis / GND 3. Check Base Base Bosch ECU Connectors for bent pins or stray wires that are potentially causing a short circuit. 4. Check connectors for any sign of water ingress. 5. Check function of switch, check wiring from switch to ECU, checking for abrasions and pinching or any form of damage.  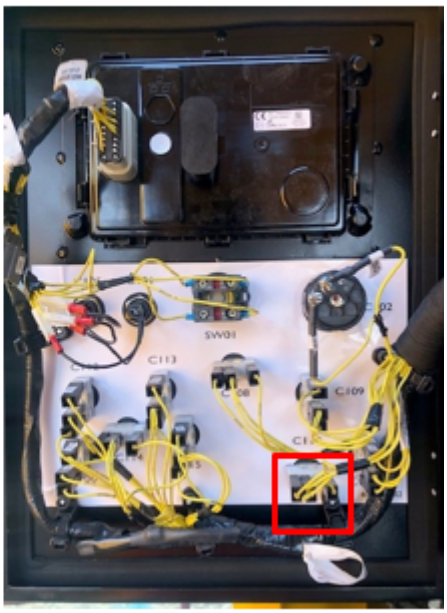

© 2026 JCB INDIA LTD

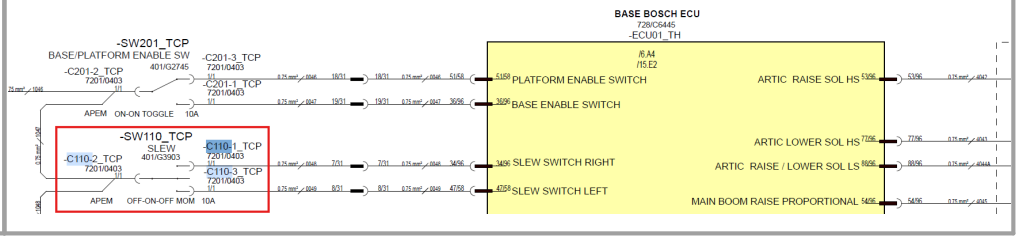

5.1.119 B1125-16

Error code:	B1125-16
ECU	Base ECU
Description:	SLEW LEFT (BASE) Switch Short Circuit to Low
Component:	Slew Switch
Vehicle reaction:	Before operation: Ignore the input (but not output as it can be operated from where there is no fault) After operation: Refer to 10V System Short Circuit Fault reaction
Possible Cause:	1. A short circuit within the wiring harness 2. A short circuit to the chassis 3. A short circuit within the harness connectors 4. Water damage/ingress within the harness connectors 5. Damaged component
Service Action:	1. Measure voltage at Base Slew Left terminal, -C110-3_TCP. With switch not pressed, terminal voltage should be approx 2.5-3.0V. With switch pressed, voltage should rise to 10V. If Voltage at terminal is constantly <2.4V or lower, then there is a short to GND either at the switch, wiring harness or at the Base Bosch ECU connectors. If voltage is Low, remove -C110-2_TCP, if voltage now rises to ~2.5V, then switch is faulty, else, the fault is at the harness to the Bosch ECU. 2. Check there are no visible defects in the wiring causing a short circuit to chassis / GND 3. Check Base Base Bosch ECU Connectors for bent pins or stray wires that are potentially causing a short circuit. 4. Check connectors for any sign of water ingress.

© 2026 JCB INDIA LTD

	5. Check function of switch, check wiring from switch to ECU, checking for abrasions and pinching or any form of damage.  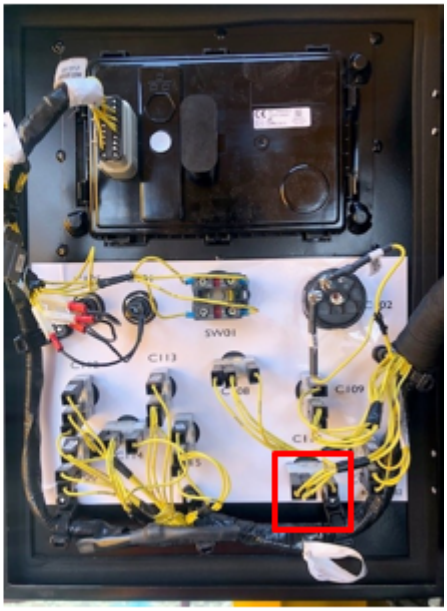 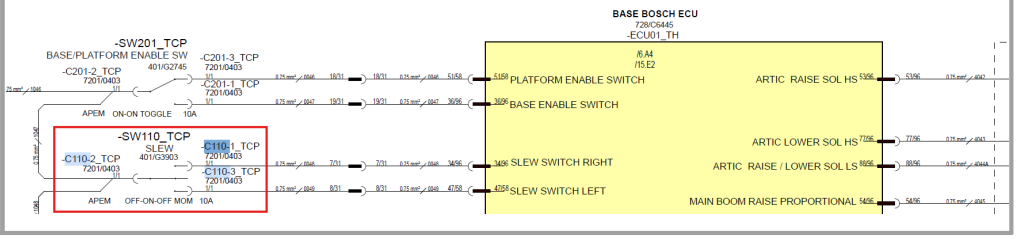

5.1.120 B1126-17

Error code:	**B1126-17**
ECU	Base ECU
Description:	MAIN BOOM Lower Limit Switch 1 Short Circuit to High
Component:	Main Boom Limit Switch 1
Vehicle reaction:	Default to raised position Prevent main boom raise & extend
Possible Cause:	1. A short circuit within the wiring harness 2. A short circuit within the harness connectors

© 2026 JCB INDIA LTD

	3. Water damage/ingress within the harness connectors 4. Damaged component
Service Action:	1. Measure voltage of Boom Down Limit Switch -SW142_MBL Pin 2. Actuate the switch to check that the voltage level changes between 10V and 0V. If this does not happen, check operation of switch. Check pins at Base Bosch ECU connector. Observe harness, Check for any pinching / damage. 2. Disconnect terminal from Pin 2, measure voltage of wire. If voltage is high 10V (or Higher) then there is a short circuit to high within the harness. 3. Check for water ingress at the switch terminals, The interconnects and at the Base Bosch ECU connectors. 4. Check the Switch,Base Bosch ECU and harnessing connectors for any damage. Pay particular attention to ECU pins as these could be bent. 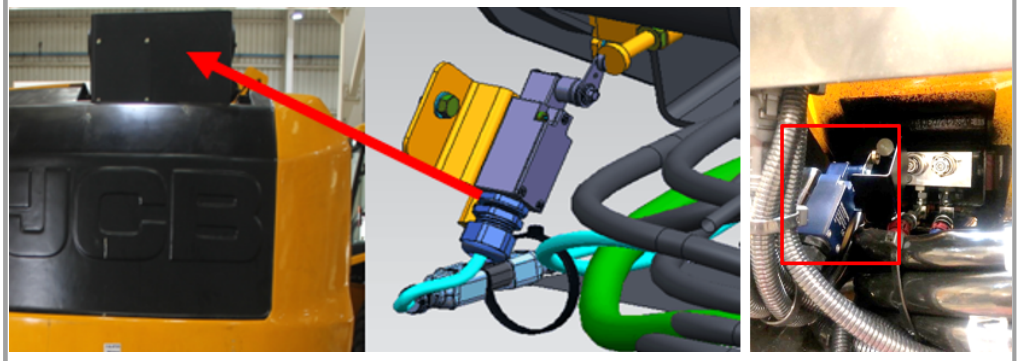

5.1.121 B1127-17

Error code:	**B1127-17**
ECU	Base ECU
Description:	MAIN BOOM Lower Limit Switch 2 Short Circuit to High
Component:	Main Boom Limit Switch 2
Vehicle reaction:	Default to raised position Prevent main boom raise & extend

© 2026 JCB INDIA LTD

Possible Cause:	1. A short circuit within the wiring harness 2. A short circuit within the harness connectors 3. Water damage/ingress within the harness connectors 4. Damaged component
Service Action:	1. Measure voltage of Boom Down Limit Switch -SW142_MBL Pin 4. Actuate the switch to check that the voltage level changes between 10V and 0V. If this does not happen, check operation of switch. Check pins at Base Bosch ECU connector. Inspect harness, check for any pinching / damage. 2. Disconnect terminal from Pin 4, measure voltage of wire. If voltage is high 10V (or Higher) then there is a short circuit to high within the harness. 3. Check for water ingress at the switch terminals and at the Base Bosch ECU connectors. 4. Check the Switch, Base Bosch ECU and harnessing connectors for any damage. Pay particular attention to ECU pins as these could be bent. 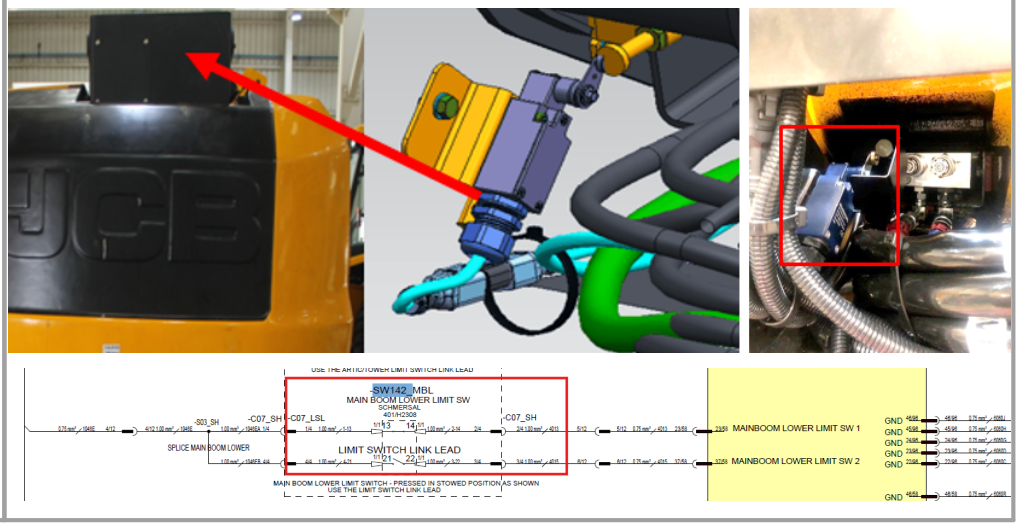

5.1.122 B1128-16

Error code:	**B1128-16**
ECU	Base ECU
Description:	MAIN BOOM Lower Limit Switch 1 Short Circuit to Low
Component:	Main Boom Limit Switch 1

© 2026 JCB INDIA LTD

Vehicle reaction:	Default to raised position Prevent main boom raise & extend
Possible Cause:	1. A short circuit within the wiring harness 2. A short circuit to the chassis 3. A short circuit within the harness connectors 4. Water damage/ingress within the harness connectors 5. Damaged component
Service Action:	1. Measure voltage of Boom Down Limit Switch -SW142_MBL Pin 2. Actuate the switch to check that the voltage level changes between 0V and 10V. If this does not happen, check operation of switch. Check pins at Base Bosch ECU connector. Inspect harness, Check for any pinching / damage. 2. Disconnect terminal from Pin 2, measure voltage of switch output at this pin. If voltage remains at 0V when switch is actuated then there is a short circuit to ground within the switch or the input to the switch. 3. Check for water ingress at the switch terminals and at the Base Bosch ECU connectors. 4. Check the Switch, Base Bosch ECU and harnessing connectors for any damage. Pay particular attention to ECU pins as these could be bent. 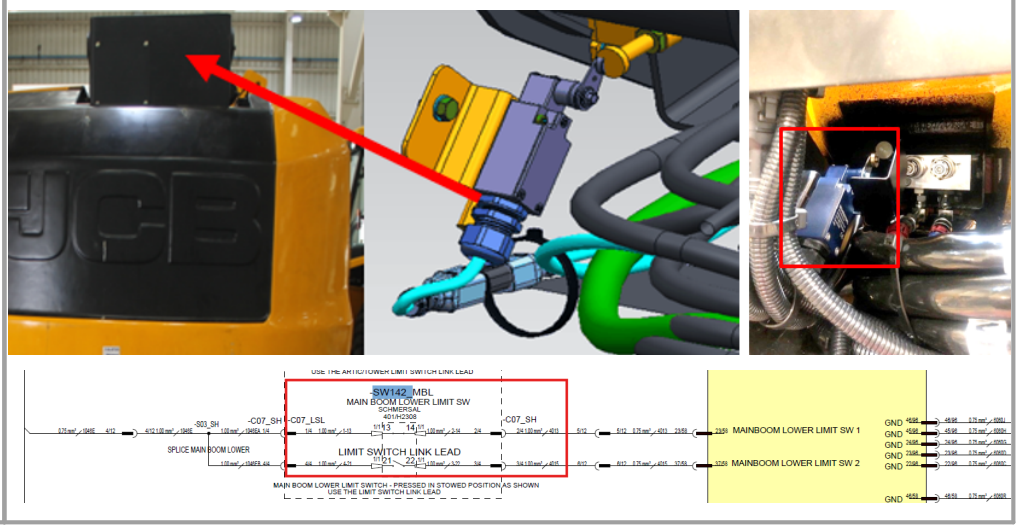

5.1.123 B1129-13

Error code:	**B1129-13**
ECU	Base ECU

© 2026 JCB INDIA LTD

Description:	MAIN BOOM Lower Limit Switch 1 AND Switch 2 Open Circuit
Component:	Main Boom Limit Switch(es)
Vehicle reaction:	Default to raised position Prevent main boom raise & extend
Possible Cause:	1. A poor connection or damaged terminal within the connector(s) 2. A damaged or broken wire within the wiring harness 3. Component is damaged
Service Action:	1. Check Terminals at Boom Down Limit Switch -SW221_MBT. Check terminals at Base Bosch ECU Connectors. Ensure all connectors are fully seated. 2. Check continuity with resistance meter between ECU to Boom Down Limit Switch -SW221_MBT terminals. 3. Check Operation of Main Boom Limit Switch. Observe all parts for damage. Check terminals not backed out in Base Bosch ECU Connector.

© 2026 JCB INDIA LTD

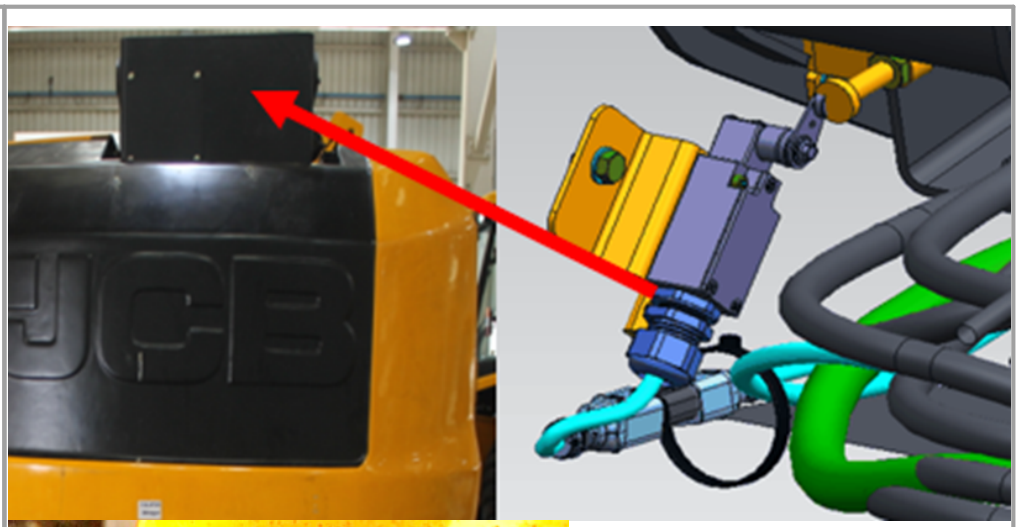

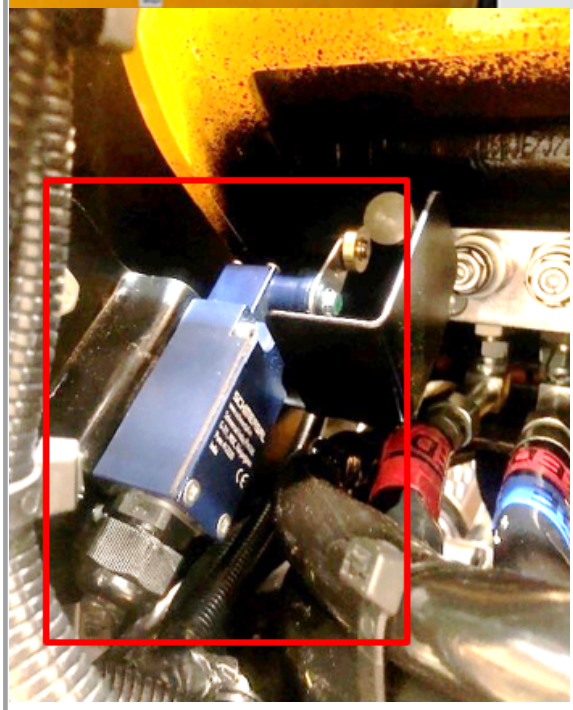

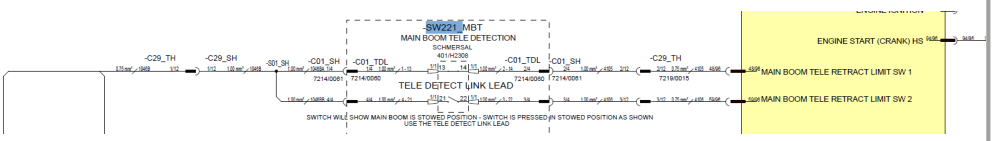

5.1.124 B1130-16

Error code:	B1130-16
ECU	Base ECU

© 2026 JCB INDIA LTD

Description :	MAIN BOOM Lower Limit Switch Short Circuit to Low
Component :	Main Boom Limit Switch
Vehicle reaction:	Default to raised position Prevent main boom raise & extend
Possible Cause:	1. A short circuit within the wiring harness 2. A short circuit to the chassis 3. A short circuit within the harness connectors 4. Water damage/ingress within the harness connectors 5. Damaged component
Service Action:	1. Measure voltage of Boom Down Limit Switch -SW142_MBL Pin 4. Actuate the switch to check that the voltage level changes between 0V and 10V. If this does not happen, check operation of switch. Check pins at Base Bosch ECU connector. Observe harness, Check for any pinching / damage. 2. Disconnect terminal from Pin 4, measure voltage of switch output at this pin. If voltage remains at 0V when switch is actuated then there is a short circuit to ground within the switch or the input to the switch. 3. Check for water ingress at the switch terminals and at the Base Bosch ECU connectors. 4. Check the Switch, Base Bosch ECU and harnessing connectors for any damage. Pay particular attention to ECU pins as these could be bent. 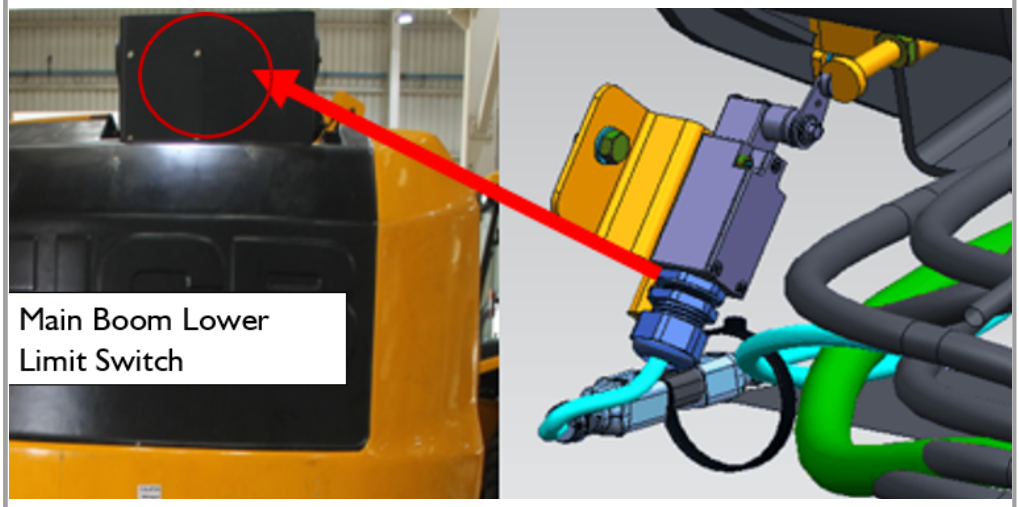

© 2026 JCB INDIA LTD

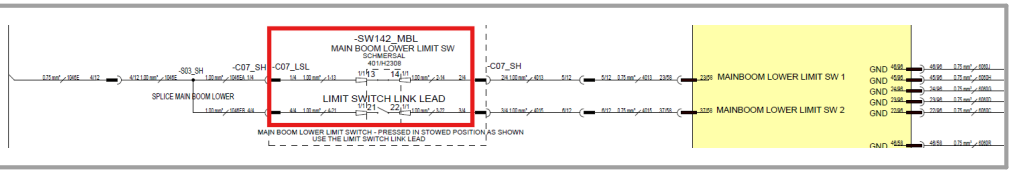

5.1.125 B1131-2F

Error code:	B1131-2F
ECU	Base ECU
Description:	Position Control - Main Boom Lower Limit Switch Short Circuit to High
Component:	Main Boom Limit Switch
Vehicle reaction:	Default to raised position Prevent main boom raise & extend
Possible Cause:	1. A short circuit within the wiring harness 2. A short circuit within the harness connectors 3. Water damage/ingress within the harness connectors 4. Damaged component
Service Action:	1. Check wiring terminals at Boom Down Limit Switch -SW142_MBL and check wiring from Switch to connector. 2. Check none of the wires to the switch connector are not shorted together 3. Check Bosch Base ECU Connectors for Damage, Bent pins and water ingress. 4. Check Switch or harness for damage.

© 2026 JCB INDIA LTD

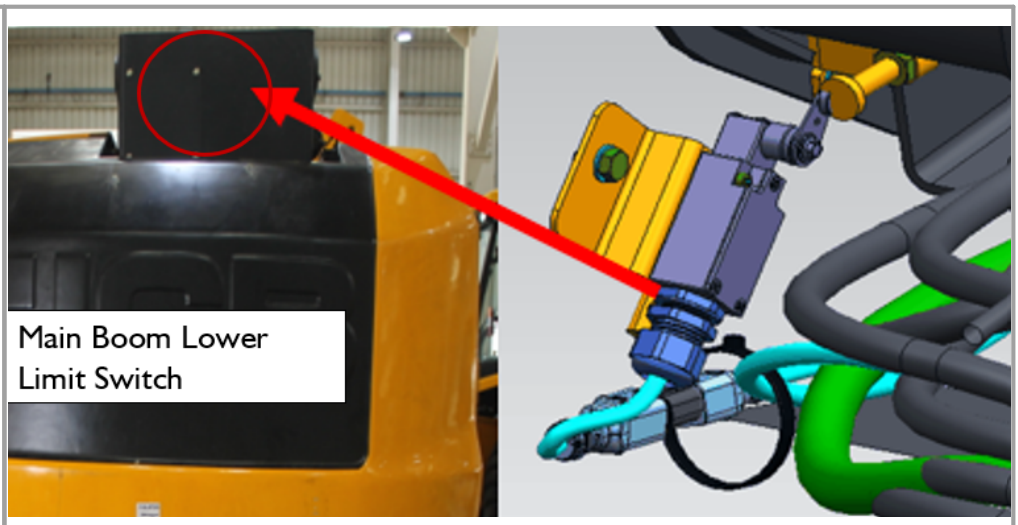

5.1.126 B1133-17

Error code:	B1133-17
ECU	Base ECU
Description:	JIB/PLATFORM FLOW High Side Solenoid Short Circuit to High
Component:	JIB/PLATFORM FLOW Solenoid
Vehicle reaction:	Detect failure mode for Short Circuit to High and disable platform rotate and allow Jib functions Note: Before Ignition ON, POST Fail (stuck in startup logic for Short Circuit to High only) and Generic output fault.
Possible Cause:	1. A short circuit within the wiring harness 2. A short circuit within the harness connectors 3. Water damage/ingress within the harness connectors 4. Damaged component
Service Action:	1. Locate Jib Up / Platform Right solenoid connector -C16_TH. Disconnect connector and measure voltage at pin 1/2. If voltage is high, check harness and Base Bosch ECU Connector terminal 7/96 for short to high.

© 2026 JCB INDIA LTD

	2. Measure voltage at -C16_TH pin 2/2. If voltage is high, check return path for short to high. 3. Check -C16_TH and Base Bosch ECU Connector for water ingress, damage, debris or stray wires that may cause short circuit. 4. Check for any damage to the harness or components that may cause short circuit. 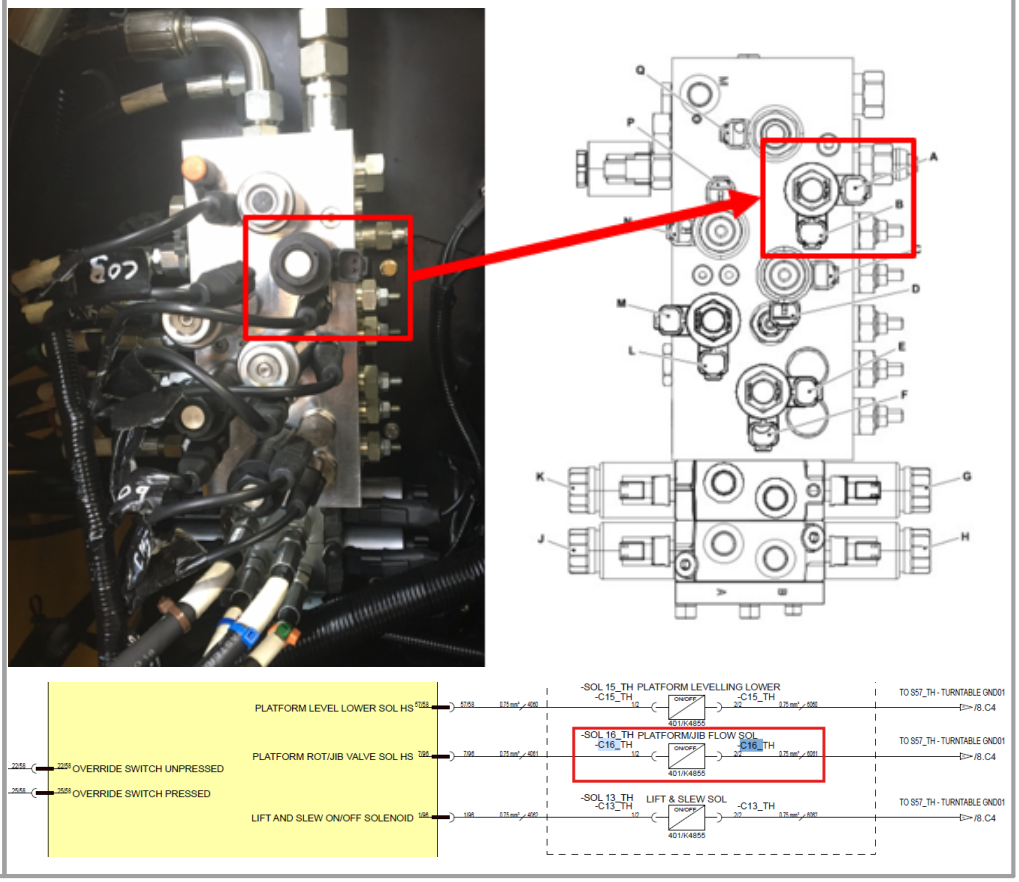

5.1.127 B1134-16

Error code:	B1134-16
ECU	Base ECU
Description:	JIB/PLATFORM FLOW High Side Solenoid Short Circuit to Low
Component:	JIB/PLATFORM FLOW Solenoid
Vehicle reaction:	Detect failure mode for Short Circuit to Low and disable platform rotate and allow Jib functions

© 2026 JCB INDIA LTD

Possible Cause:	1. A short circuit within the wiring harness 2. A short circuit to the chassis 3. A short circuit within the harness connectors 4. Water damage/ingress within the harness connectors 5. Damaged component
Service Action:	1. Locate Jib Up / Platform Right solenoid connector -C16_TH. Disconnect connector and test pin 1/2 for short to GND. Check harness and Base Bosch ECU Connector terminal 7/96 for short to GND. 2. Test for short to GND at -C16_TH pin 2/2. Check return path for short to GND. 3. Check -C16_TH and Base Bosch ECU Connector for water ingress, damage, debris or stray wires that may cause short circuit. 4. Check for any damage to the harness or components that may cause short circuit. 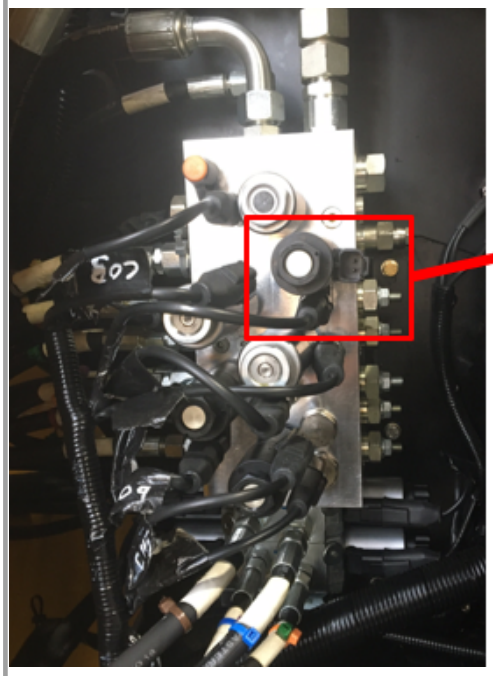 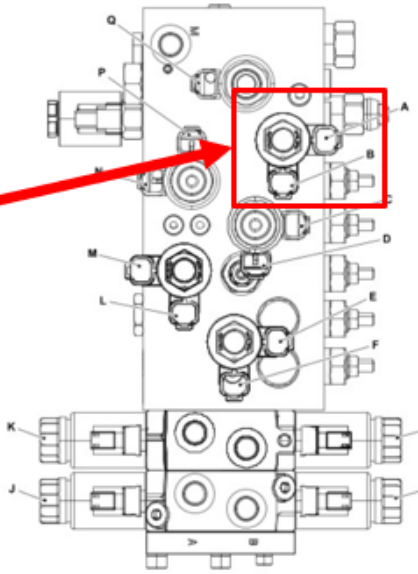 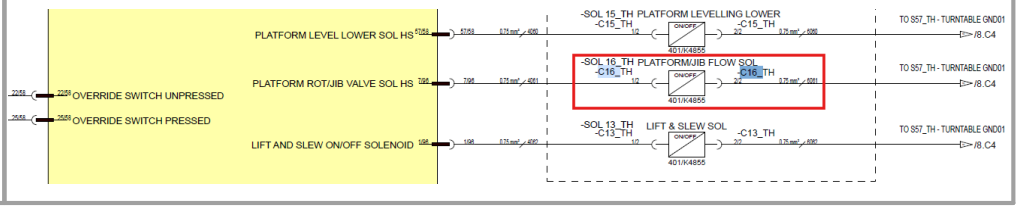

© 2026 JCB INDIA LTD

5.1.128 B1135-13

Error code:	B1135-13
ECU	Base ECU
Description:	Beacon(s) - Beacon 2 Open Circuit or Short Circuit to High(12v)
Component:	Beacon 2
Vehicle reaction:	Detect failure mode.
Possible Cause:	1. A short or open circuit within the wiring harness 2. A short circuit within the harness connectors 3. Water damage/ingress within the harness connectors 4. Damaged component
Service Action:	1. Check continuity between Beacon 1 connector -C20_TH pin 1/2 and Base Bosch ECU -C26-XC2_TH Pin 43/58 (Wire #4032). Check Wire #4032 not short circuit to high. 2. Check Beacon connector and ECU Connectors. Ensure no bent pins or stray wire causing short circuit. Ensure wires correctly terminated. 3. Check Beacon connector and ECU Connectors for any water ingress. 4. Check Beacon for any damage.

© 2026 JCB INDIA LTD



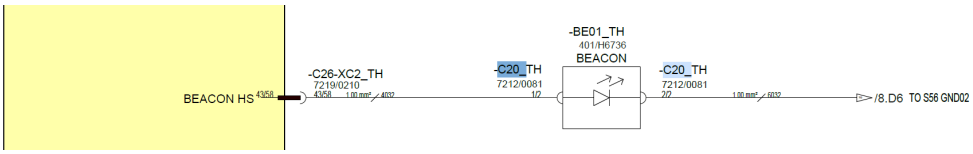

5.1.129 B1136-16

Error code:	B1136-16
ECU	Base ECU
Description:	Beacon(s) - Beacon 2 Short Circuit to Low.
Component:	Beacon 2
Vehicle reaction:	Detect failure mode.
Possible Cause:	1. A short circuit within the wiring harness 2. A short circuit to the chassis 3. A short circuit within the harness connectors 4. Water damage/ingress within the harness connectors 5. Damaged component

© 2026 JCB INDIA LTD

Service Action:	1. Check continuity between Beacon 1 connector -C20_TH pin 1/2 and Base Bosch ECU -C26-XC2_TH Pin 43/58 (Wire #4032). 2. Check Wire #4032 not short circuit to GND. Check for abrasions and pinching of the harness. 3. Check Beacon connector and ECU Connectors. Ensure no bent pins or stray wire causing short circuit. Ensure wires correctly terminated. 4. Check Beacon connector and ECU Connectors for any water ingress. 5. Check Beacon for any damage.  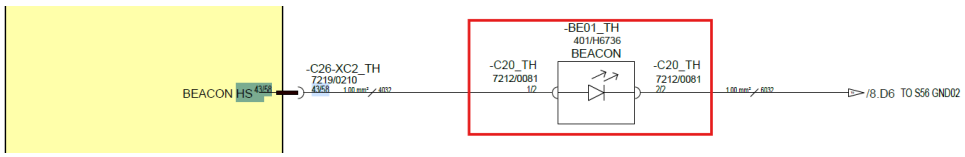

5.1.130 B1138-17

Error code:	**B1138-17**
ECU	Base ECU
Description:	Main boom telescopic retract limit switch 1 short circuit to high
Component:	Main boom telescopic retract limit switch
Vehicle reaction:	Default to raised position

© 2026 JCB INDIA LTD

	Prevent main boom raise & extend, and articulated boom raise Allow main boom retract at cushioning speed only Allow slew speed * 50%
Possible Cause:	1. A short circuit within the wiring harness 2. A short circuit to the chassis 3. A short circuit within the harness connectors 4. Water damage/ingress within the harness connectors 5. Damaged component
Service Action:	1. Measure voltage of Boom telescopic retract Limit Switch -SW221_MBT Pin 2. Actuate the switch to check that the voltage level changes between 10V and 0V. If this does not happen, check operation of switch. Check pins at Base Bosch ECU connector. Observe harness, Check for any pinching / damage. 2. Disconnect terminal from Pin 2, measure voltage of wire. If voltage is high 10V (or Higher) then there is a short circuit to high within the harness. 3. Check for water ingress at the switch terminals, The interconnects and at the Base Bosch ECU connectors. 4. Check the Switch,Base Bosch ECU and harnessing connectors for any damage. Pay particular attention to ECU pins as these could be bent. 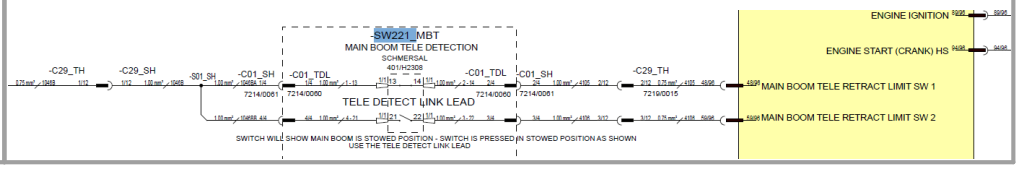

5.1.131 B1139-17

Error code:	**B1139-17**
ECU	Base ECU
Description:	Main boom telescopic retract limit switch 2 short circuit to high
Component:	Main boom telescopic retract limit switch

© 2026 JCB INDIA LTD

Vehicle reaction:	Default to raised position Prevent main boom raise & extend, and articulated boom raise Allow main boom retract at cushioning speed only Allow slew speed * 50%
Possible Cause:	1. A short circuit within the wiring harness 2. A short circuit to the chassis 3. A short circuit within the harness connectors 4. Water damage/ingress within the harness connectors 5. Damaged component
Service Action:	1. Measure voltage of Boom telescopic retract Limit Switch -SW221_MBT Pin 4. Actuate the switch to check that the voltage level changes between 10V and 0V. If this does not happen, check operation of switch. Check pins at Base Bosch ECU connector. Inspect harness, check for any pinching / damage. 2. Disconnect terminal from Pin 4, measure voltage of wire. If voltage is high 10V (or Higher) then there is a short circuit to high within the harness. 3. Check for water ingress at the switch terminals and at the Base Bosch ECU connectors. 4. Check the Switch, Base Bosch ECU and harnessing connectors for any damage. Pay particular attention to ECU pins as these could be bent. 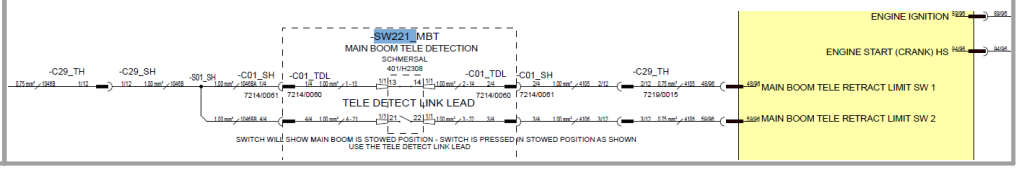

5.1.132 B1140-16

Error code:	**B1140-16**
ECU	Base ECU
Description:	Main boom telescopic retract limit switch 1 short circuit to low
Component:	Main boom telescopic retract limit switch

© 2026 JCB INDIA LTD

Vehicle reaction:	Default to raised position Prevent main boom raise & extend, and articulated boom raise Allow main boom retract at cushioning speed only Allow slew speed * 50%
Possible Cause:	1. A short circuit within the wiring harness 2. A short circuit to the chassis 3. A short circuit within the harness connectors 4. Water damage/ingress within the harness connectors 5. Damaged component
Service Action:	1. Measure voltage of Boom telescopic retract Limit Switch -SW221_MBT Pin 2. Actuate the switch to check that the voltage level changes between 10V and 0V. If this does not happen, check operation of switch. Check pins at Base Bosch ECU connector. Observe harness, Check for any pinching / damage. 2. Disconnect terminal from Pin 2, measure voltage of wire. If voltage is high 10V (or Higher) then there is a short circuit to high within the harness. 3. Check for water ingress at the switch terminals, The interconnects and at the Base Bosch ECU connectors. 4. Check the Switch,Base Bosch ECU and harnessing connectors for any damage. Pay particular attention to ECU pins as these could be bent. 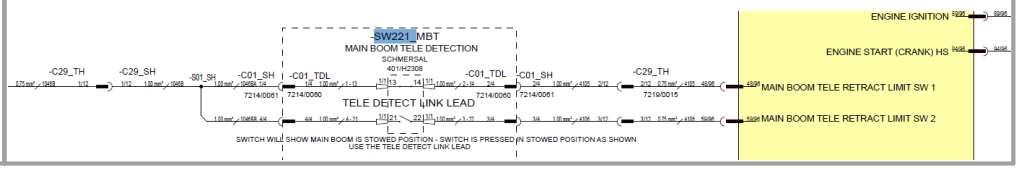

5.1.133 B1141-13

Error code:	**B1141-13**
ECU	Base ECU
Description:	Main boom telescopic retract limit switch 1 and 2 are both open circuit
Component:	Main boom telescopic retract limit switch

© 2026 JCB INDIA LTD

Vehicle reaction:	• Default to raised position • Prevent main boom raise & extend, and articulated boom raise • Allow main boom retract at cushioning speed only • Allow slew speed * 50%
Possible Cause:	1. Poor connection 2. Break in wiring 3. Water in switch 4. Broken switch
Service Action:	1. Check wiring between switch and ECU for continuity 2. Check switch function with multi-meter. 3.Check switch functionality 4.Check for water ingress 5. Check for water ingress/corrosion. 6. Check wire from limit switch to Base ECU connector 4105 and 4016. 7. Check inputs on pin 13 and 21 for 10volt input. 8. Check wire 1046B for and cut or damage. 9. Check Base ECU pin 48/96 and 59/96 for bent or loose connection. 10. Check connector C29_TH and C01_TH for loose connection or any damage. 11.Turn ignition on off to clear code 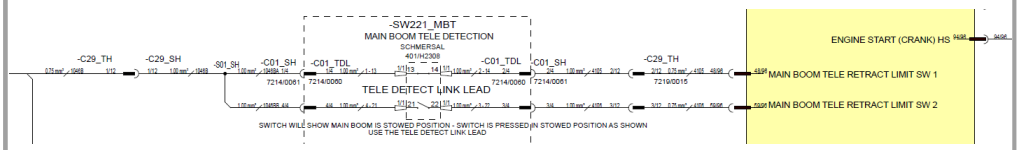

5.1.134 B1142-16

Error code:	**B1142-16**

© 2026 JCB INDIA LTD

ECU	Base ECU
Description:	Main boom telescopic retract limit switch 2 short circuit to Low
Component:	Main boom telescopic retract limit switch
Vehicle reaction:	• Default to raised position • Prevent main boom raise & extend, and articulated boom raise • Allow main boom retract at cushioning speed only • Allow slew speed * 50%
Possible Cause:	1. A short circuit within the wiring harness 2. A short circuit to the chassis 3. A short circuit within the harness connectors 4. Water damage/ingress within the harness connectors 5. Damaged component
Service Action:	1. Measure voltage of Boom telescopic retract Limit Switch -SW221_MBT Pin 4. Actuate the switch to check that the voltage level changes between 10V and 0V. If this does not happen, check operation of switch. Check pins at Base Bosch ECU connector. Inspect harness, check for any pinching / damage. 2. Disconnect terminal from Pin 4, measure voltage of wire. If voltage is high 10V (or Higher) then there is a short circuit to high within the harness. 3. Check for water ingress at the switch terminals and at the Base Bosch ECU connectors. 4. Check the Switch, Base Bosch ECU and harnessing connectors for any damage. Pay particular attention to ECU pins as these could be bent.

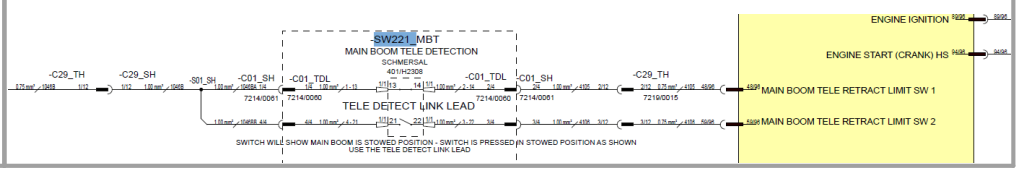

© 2026 JCB INDIA LTD

5.1.135 B1143-92

Error code:	B1143-92
ECU	Base ECU
Description:	Main boom telescopic retract limit switch 1 and 2 Short to 10V
Component:	Main boom telescopic retract limit switch
Vehicle reaction:	• Default to raised position • Prevent main boom raise & extend, and articulated boom raise • Allow main boom retract at cushioning speed only • Allow slew speed * 50%
Possible Cause:	1. Poor connection 2. Break in wiring 3. Water in switch 4. Broken switch
Service Action:	1.Check wiring between switch and ECU for continuity 2. Check switch function with multi-meter. 3.Check switch functionality 4.Check for water ingress 5. Check for water ingress/corrosion. 6. Check wire from limit switch to Base ECU connector 4105 and 4016. 7. Check inputs on pin 13 and 21 for 10volt input. 8. Check wire 1046B for and cut or damage. 9. Check Base ECU pin 48/96 and 59/96 for bent or loose connection. 10. Check connector C29_TH and C01_TH for loose connection or any damage.

© 2026 JCB INDIA LTD

	11.Turn ignition on off to clear code 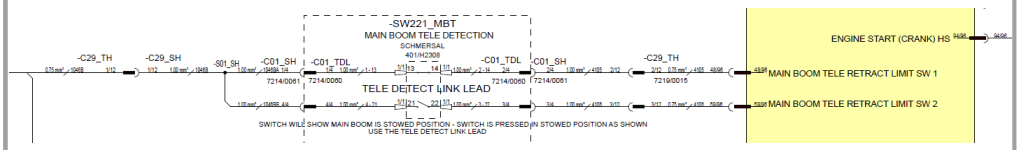

5.1.136 B1144-17

Error code:	B1144-17
ECU	Base ECU
Description:	Base 10v Output - 10v Input System Short Circuit to High
Component:	Base ECU
Vehicle reaction:	Block all inputs connected to 10V present on the respective control panel.
Possible Cause:	1. A short circuit within the wiring harness 2. A short circuit within the harness connectors 3. Water damage/ingress within the harness connectors 4. Damaged component
Service Action:	1. Fault indicates the 10V output from the Base Bosch ECU (Terminal 32/58) has shorted to +12V. To narrow down fault location, Disconnect Interconnection HDP Connector -C50_TH. Measure Voltage at pin 30 and 31 of -C50_TH. If voltage is +10V, then fault is within Turntable Control Panel (else, it is the feed to the turntable limit switches). The 10V feed runs to terminal 1 on all Control Panel Switches. Check Wiring and look for shorts, abrasions and pinching within harness. 2. Check for any damage or wiring faults either at the Base Bosch ECU, Turntable Control Panel, Boom Down Limit Switch or Slew Position Switch. Check all wiring and interconnects (Control Panel Only). 3. Check all connectors above for water damage 4. Check operation of switches and all connectors for any damage.

© 2026 JCB INDIA LTD

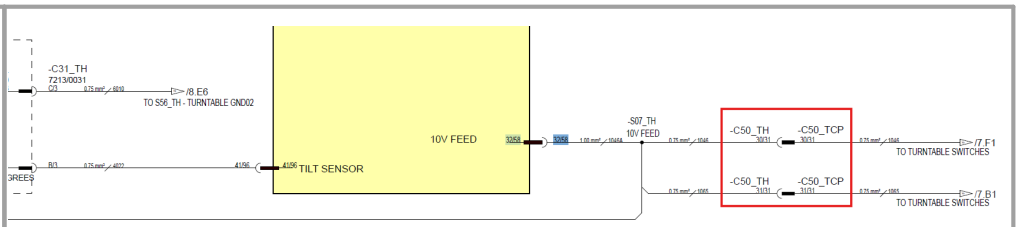

5.1.137 B1145-16

Error code:	B1145-16
ECU	Base ECU
Description:	Base 10v Output - 10v Input System Short Circuit to Low
Component:	Base ECU
Vehicle reaction:	Block all inputs connected to 10V present on the respective control panel.
Possible Cause:	1. A short circuit within the wiring harness 2. A short circuit to the chassis 3. A short circuit within the harness connectors 4. Water damage/ingress within the harness connectors 5. Damaged component
Service Action:	1. Fault indicates the 10V output from the Base Bosch ECU (Terminal 32/58) has shorted to GND. To narrow down fault location, Disconnect Interconnection HDP Connector -C50_TH. Measure resistance to GND on -C50_TCP (Control Panel mounted connector). If a short to GND exists, them fault lies within Turntable Control Panel (Else, check the Turntable Harness to the Limit switches). The 10V feed runs to terminal 1 on all Control Panel Switches. Check Wiring and look for shorts, abrasions and pinching within harness. 2. Check for any damage or wiring faults either at the Base Bosch ECU, Turntable Control Panel, Boom Down Limit Switch or Slew Position Switch. Check all wiring and interconnects (Control Panel Only). 3. Check all connectors above for water damage 4. Check operation of switches and all connectors for any damage.

© 2026 JCB INDIA LTD

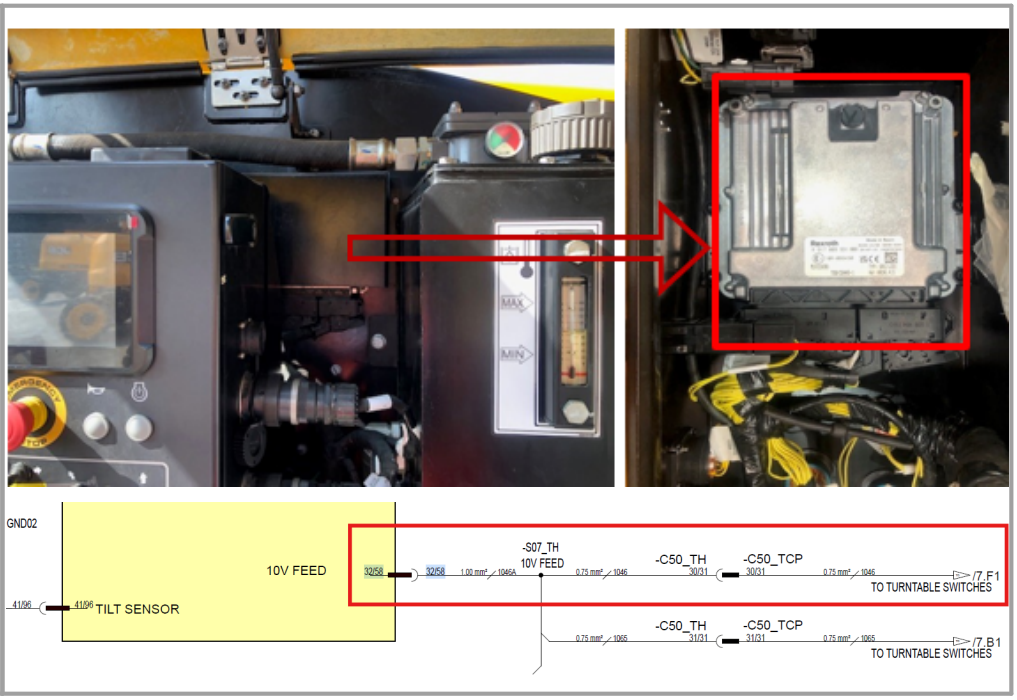

5.1.138 B1146-17

Error code:	B1146-17
ECU	Platform ECU
Description:	STEER JOYSTICK Short Circuit to High (>4.75V)
Component:	Steer Joystick
Vehicle reaction:	Detect failure mode - Ignore steer input (machine stops immediately)
Possible Cause:	1. A short circuit within the wiring harness 2. A short circuit within the harness connectors 3. Water damage/ingress within the harness connectors 4. Damaged component
Service Action:	1. Measure voltage between pin 1/6 (GND) and pin 5/6 (Steer) on joystick connector. Voltage should measure between 0.25 - 4.75V depending on position of Joystick. If value is above 4.75V then there is likely a short circuit to high either within the joystick or wiring back to the Platform Bosch ECU Pin 41/96.

© 2026 JCB INDIA LTD

	2. Check Connectors at joystick and Platform Bosch ECU, check for bent pins or stray wires potentially causing a short circuit. 3. Check Connectors at joystick and Platform Bosch ECU for water ingress. 4. Check joystick for damage. Check all wiring for potential damage, especially abrasions and pinching.  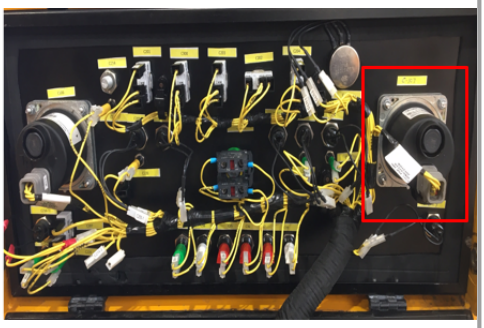 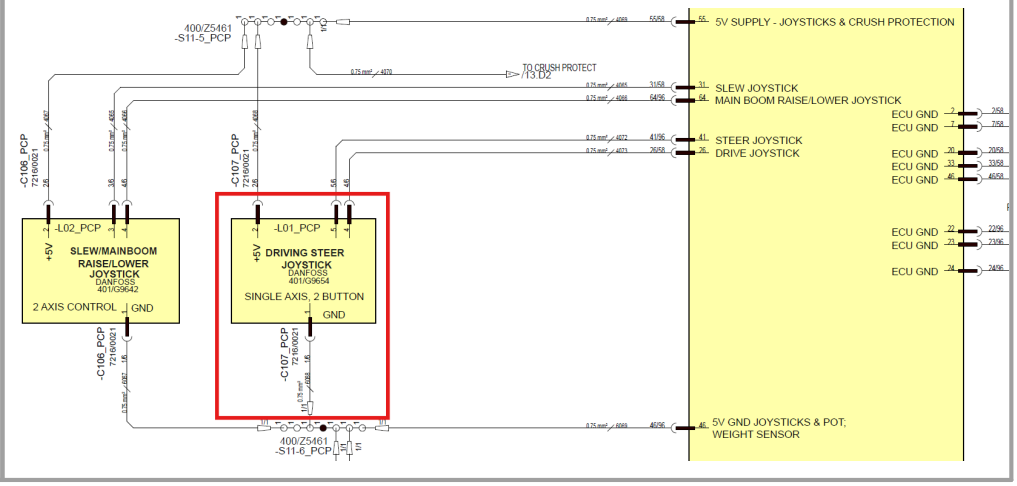

5.1.139 B1147-16

Error code:	B1147-16
ECU	Platform ECU
Description:	STEER JOYSTICK Short Circuit to Low (<0.25V) or Open Circuit
Component:	Steer Joystick
Vehicle reaction:	Detect failure mode - Ignore steer input (machine stops immediately)
Possible Cause:	1. A short circuit within the wiring harness 2. A short circuit to the chassis

© 2026 JCB INDIA LTD

	3. A short circuit within the harness connectors 4. Water damage/ingress within the harness connectors 5. Damaged component 6. A damaged or broken wire within the wiring harness
Service Action:	1. Measure voltage between pin 1/6 (GND) and pin 5/6 (Steer) on joystick connector. Voltage should measure between 0.25 - 4.75V depending on position of Joystick. If value is below 0.25V then there is likely a short circuit to GND either within the joystick or wiring back to the Platform Bosch ECU Pin 41/96. 2. Check Connectors at joystick and Platform Bosch ECU, check for bent pins or stray wires potentially causing a short circuit. 3. Check Connectors at joystick and Platform Bosch ECU for water ingress. 4. Check joystick for damage. Check all wiring for potential damage, especially abrasions and pinching.  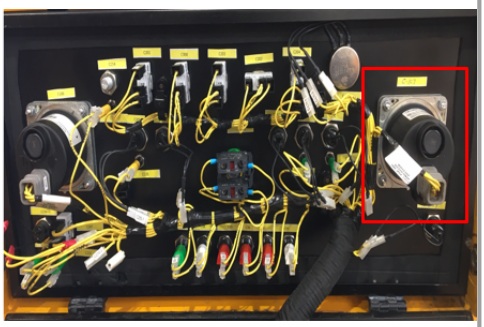 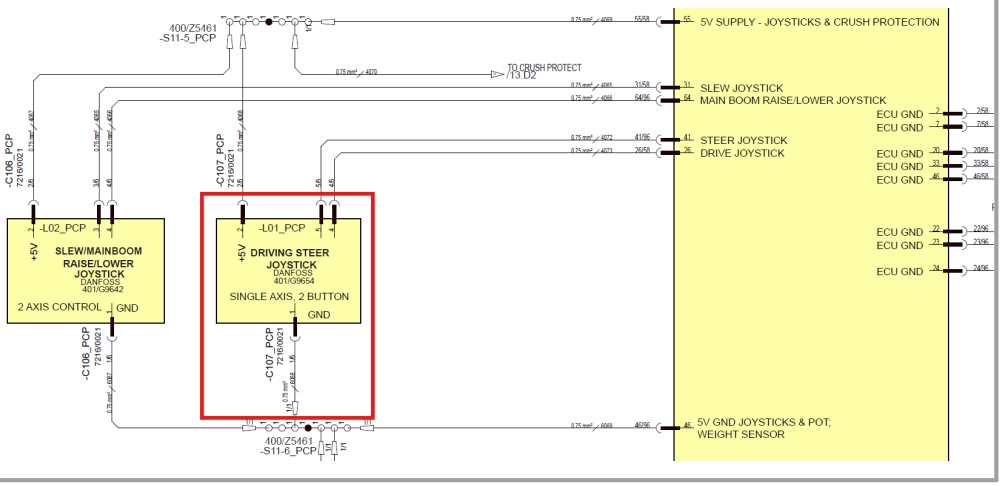

5.1.140 B1148-17

Error code:	**B1148-17**

© 2026 JCB INDIA LTD

ECU	Platform ECU
Description:	Joystick Boom Raise/Lower Short Circuit to High (>4.75V)
Component:	Main Boom Joystick
Vehicle reaction:	Detect failure mode - Ignore lift input
Possible Cause:	1. A short circuit within the wiring harness 2. A short circuit within the harness connectors 3. Water damage/ingress within the harness connectors 4. Damaged component
Service Action:	1. Measure voltage between pin 1/6 (GND) and pin 4/6 (Main Boom Raise/Lower) on joystick connector. Voltage should measure between 0.25 - 4.75V depending on position of Joystick. If value is above 4.75V then there is likely a short circuit to high either within the joystick or wiring back to the Platform Bosch ECU Pin 64/96. 2. Check Connectors at joystick and Platform Bosch ECU, check for bent pins or stray wires potentially causing a short circuit. 3. Check Connectors at joystick and Platform Bosch ECU for water ingress. 4. Check joystick for damage. Check all wiring for potential damage, especially abrasions and pinching.  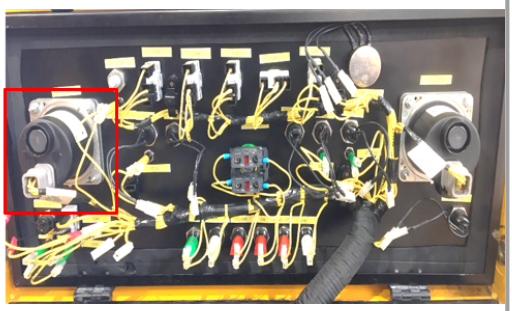

© 2026 JCB INDIA LTD

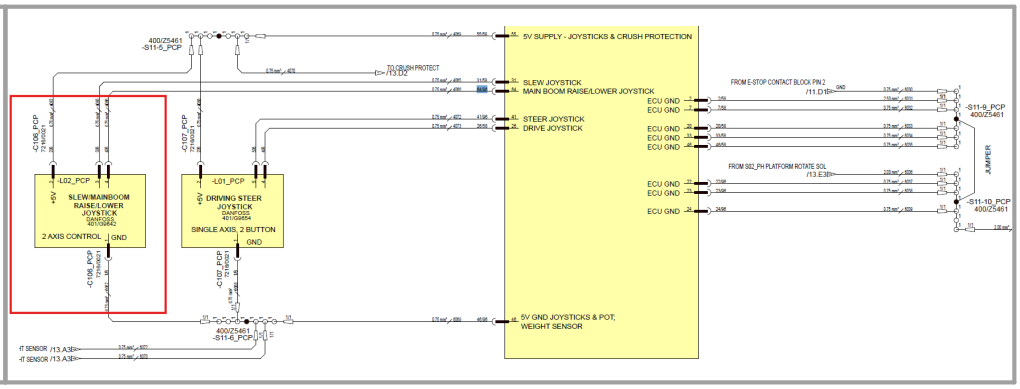

5.1.141 B1149-16

Error code:	B1149-16
ECU	Platform ECU
Description:	Joystick Boom Raise/Lower Short Circuit to Low (<0.25V) or Open Circuit
Component:	Main Boom Joystick
Vehicle reaction:	Detect failure mode - Ignore lift input
Possible Cause:	1. A short circuit within the wiring harness 2. A short circuit to the chassis 3. A short circuit within the harness connectors 4. Water damage/ingress within the harness connectors 5. Damaged component 6. A damaged or broken wire within the wiring harness
Service Action:	1. Measure voltage between pin 1/6 (GND) and pin 4/6 (Main Boom Raise/Lower) on joystick connector. Voltage should measure between 0.25 - 4.75V depending on position of Joystick. If value is below 0.25V then there is likely a short circuit to GND either within the joystick or wiring back to the Platform Bosch ECU Pin 64/96. 2. Check Connectors at joystick and Platform Bosch ECU, check for bent pins or stray wires potentially causing a short circuit. 3. Check Connectors at joystick and Platform Bosch ECU for water ingress.

© 2026 JCB INDIA LTD

	4. Check joystick for damage. Check all wiring for potential damage, especially abrasions and pinching.  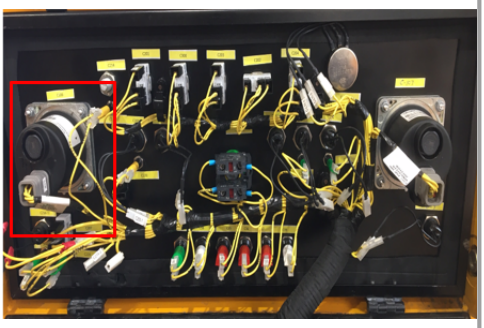 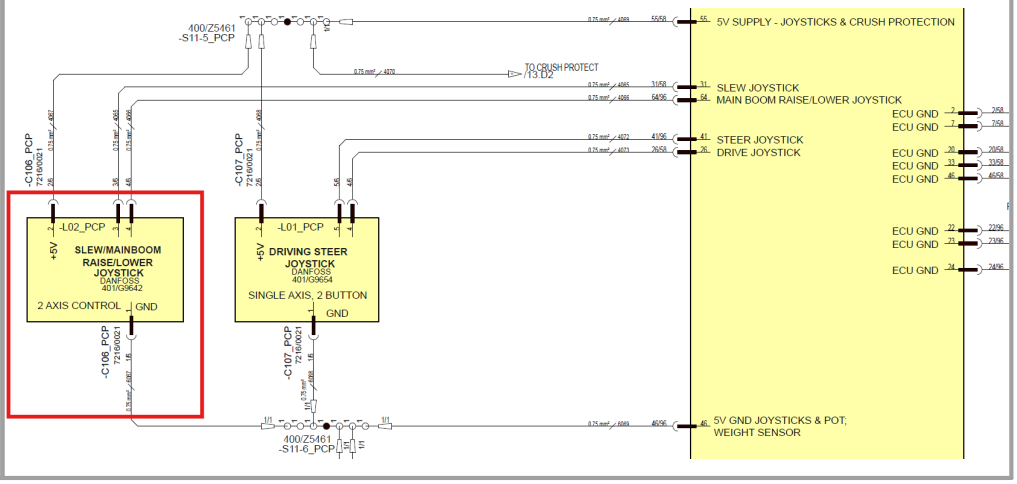

5.1.142 B1150-17

Error code:	B1150-17
ECU	Platform ECU
Description:	SLEW JOYSTICK Short Circuit to High (>4.75V)
Component:	Slew Joystick
Vehicle reaction:	Detect failure mode - Ignore slew input
Possible Cause:	1. A short circuit within the wiring harness 2. A short circuit within the harness connectors 3. Water damage/ingress within the harness connectors 4. Damaged component

© 2026 JCB INDIA LTD

Service Action:	1. Measure voltage between pin 1/6 (GND) and pin 3/6 (Slew) on joystick connector. Voltage should measure between 0.25 - 4.75V depending on position of Joystick. If value is above 4.75V then there is likely a short circuit to high either within the joystick or wiring back to the Platform Bosch ECU Pin 31/58. 2. Check Connectors at joystick and Platform Bosch ECU, check for bent pins or stray wires potentially causing a short circuit. 3. Check Connectors at joystick and Platform Bosch ECU for water ingress. 4. Check joystick for damage. Check all wiring for potential damage, especially abrasions and pinching. 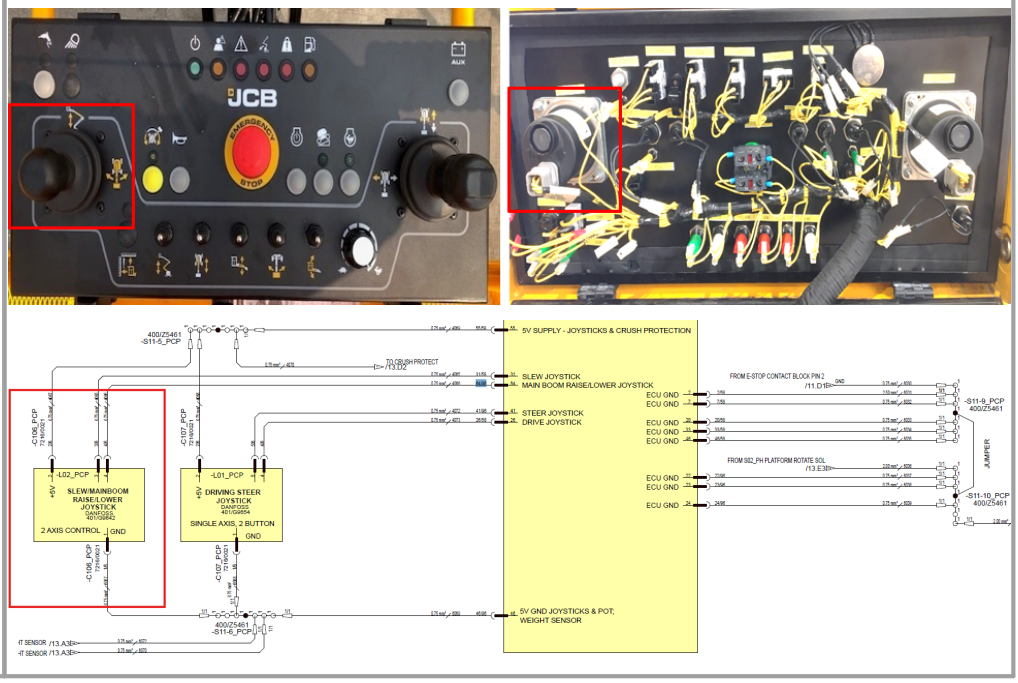

5.1.143 B1151-16

Error code:	**B1151-16**
ECU	Platform ECU
Description:	SLEW JOYSTICK Short Circuit to Low (<0.25V) or Open Circuit
Component:	Slew Joystick
Vehicle reaction:	Detect failure mode - Ignore slew input

© 2026 JCB INDIA LTD

Possible Cause:	1. A short circuit within the wiring harness 2. A short circuit to the chassis 3. A short circuit within the harness connectors 4. Water damage/ingress within the harness connectors 5. Damaged component 6. A damaged or broken wire within the wiring harness
Service Action:	1. Measure voltage between pin 1/6 (GND) and pin 3/6 (Slew) on joystick connector. Voltage should measure between 0.25 - 4.75V depending on position of Joystick. If value is below 0.25V then there is likely a short circuit to GND either within the joystick or wiring back to the Platform Bosch ECU Pin 31/58. 2. Check Connectors at joystick and Platform Bosch ECU, check for bent pins or stray wires potentially causing a short circuit. 3. Check Connectors at joystick and Platform Bosch ECU for water ingress. 4. Check joystick for damage. Check all wiring for potential damage, especially abrasions and pinching.  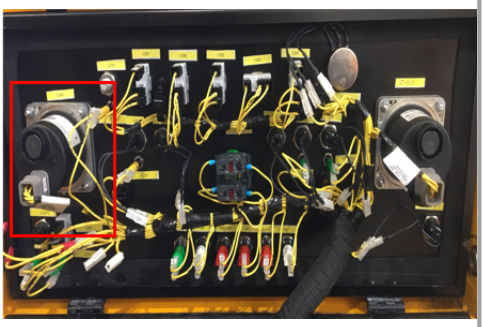 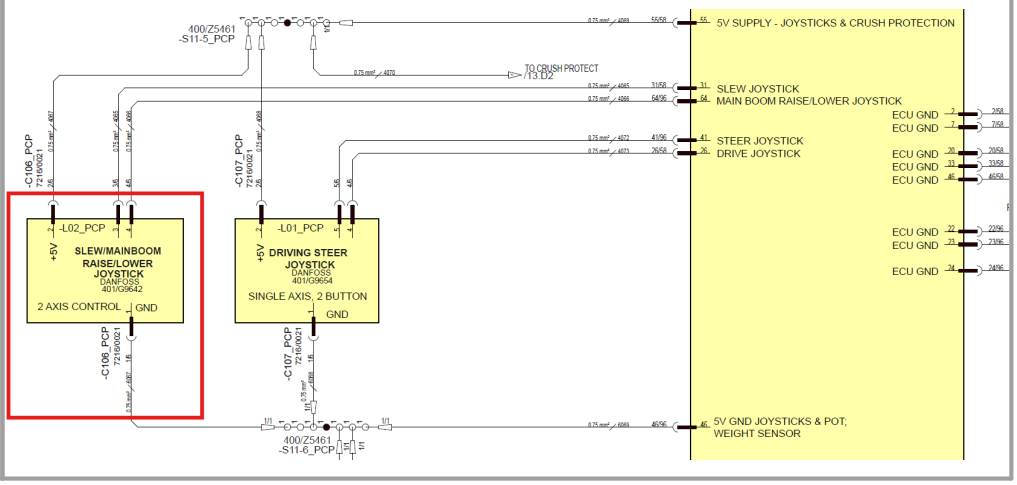

© 2026 JCB INDIA LTD

5.1.144 B1154-16

Error code:	B1154-16
ECU	Platform ECU
Description:	SLEW JOYSTICK Short Circuit to Low (<0.25V) or Open Circuit
Component:	Slew Joystick
Vehicle reaction:	Detect failure mode - Ignore slew input
Possible Cause:	1. A short circuit within the wiring harness 2. A short circuit to the chassis 3. A short circuit within the harness connectors 4. Water damage/ingress within the harness connectors 5. Damaged component 6. A damaged or broken wire within the wiring harness
Service Action:	1. Measure voltage between pin 1/6 (GND) and pin 3/6 (Slew) on joystick connector. Voltage should measure between 0.25 - 4.75V depending on position of Joystick. If value is below 0.25V then there is likely a short circuit to GND either within the joystick or wiring back to the Platform Bosch ECU Pin 31/58. 2. Check Connectors at joystick and Platform Bosch ECU, check for bent pins or stray wires potentially causing a short circuit. 3. Check Connectors at joystick and Platform Bosch ECU for water ingress. 4. Check joystick for damage. Check all wiring for potential damage, especially abrasions and pinching.  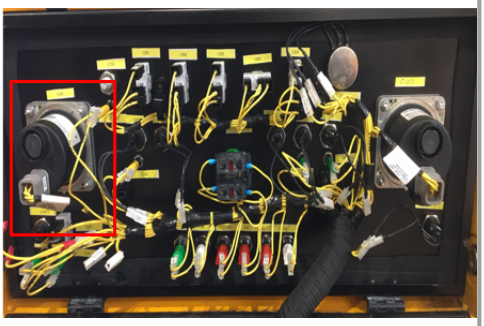

© 2026 JCB INDIA LTD

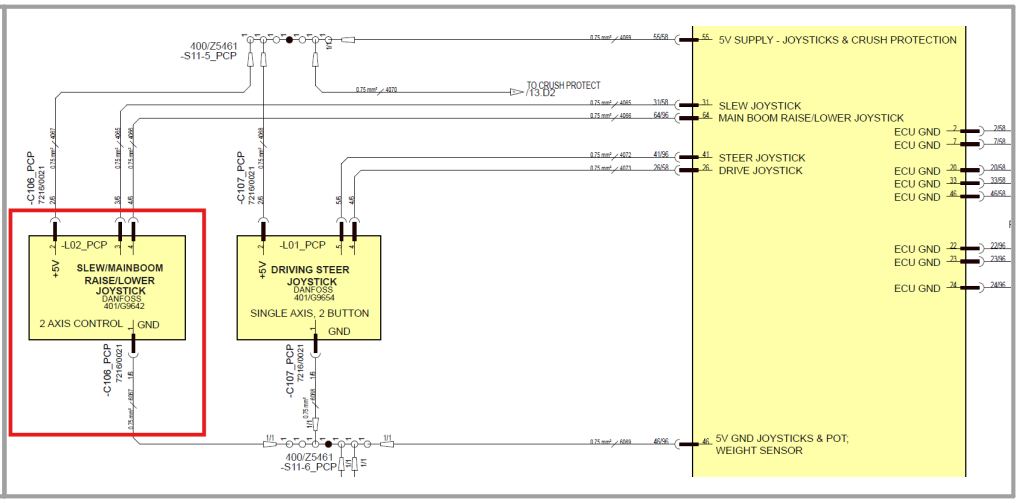

5.1.145 B1167-13

Error code:	B1167-13
ECU	Platform ECU
Description:	Platform rotate left output solenoid short circuit to high or open circuit
Component:	Platform rotate left output solenoid
Vehicle reaction:	Detect failure modes. Dont disable any output and dont ignore any input
Possible Cause:	1. A short circuit within the wiring harness 2. A short circuit to the chassis 3. A short circuit within the harness connectors 4. Water damage/ingress within the harness connectors 5. Damaged component
Service Action:	1. Fault indicates short to high or open circuit to Platform rotate left Solenoid. Check voltage at solenoid connector -C04_PH pin 1/2 greater than 10.5 volt and check coil resistance.. 2. Check continuity of GND path from Solenoid connector -C04_PH pin 2/2 to Turntable GND & Check Ground wire 6084. 3. Check Interconnect -C22_PCP / -C22_PH pin S/21. Check bent / backed out pins, debris, shorts or water ingress.

© 2026 JCB INDIA LTD

	4. Check Platform ECU terminal 77/96. Check Connector for bent / backed out pins, debris, shorts or water ingress. 5. Check wire #4084 for continuity from Platform ECU pin 77/96 to Platform rotate left Solenoid connector -C04_PH pin 1/2. 6. Check the harness for any abrasions, pinching or any other damage that may lead to a fault. 7. Check if valve is mechanically jammed 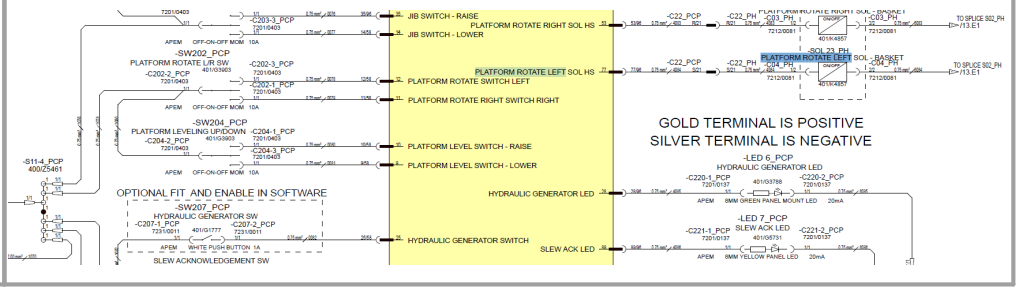

5.1.146 B1168-16

Error code:	B1168-16
ECU	Platform ECU
Description:	PLATFORM ROTATE LEFT Solenoid Valve Short Circuit to Low
Component:	Platform rotate left solenoid
Vehicle reaction:	Detect failure modes. Don't disable any output and don't ignore any input
Possible Cause:	1. A short circuit within the wiring harness 2. A short circuit to the chassis 3. A short circuit within the harness connectors 4. Water damage/ingress within the harness connectors 5. Damaged component
Service Action:	1. Fault indicates short to high or open circuit to Platform rotate left Solenoid. Check voltage at solenoid connector -C04_PH pin 1/2 greater than 10.5 volt and check coil resistance.. 2. Check continuity of GND path from Solenoid connector -C04_PH pin 2/2 to Turntable GND & Check Ground wire 6084.

© 2026 JCB INDIA LTD

	3. Check Interconnect -C22_PCP / -C22_PH pin S/21. Check bent / backed out pins, debris, shorts or water ingress. 4. Check Platform ECU terminal 77/96. Check Connector for bent / backed out pins, debris, shorts or water ingress. 5. Check wire #4084 for continuity from Platform ECU pin 77/96 to Platform rotate left Solenoid connector -C04_PH pin 1/2. 6. Check the harness for any abrasions, pinching or any other damage that may lead to a fault. 7. Check if valve is mechanically jammed 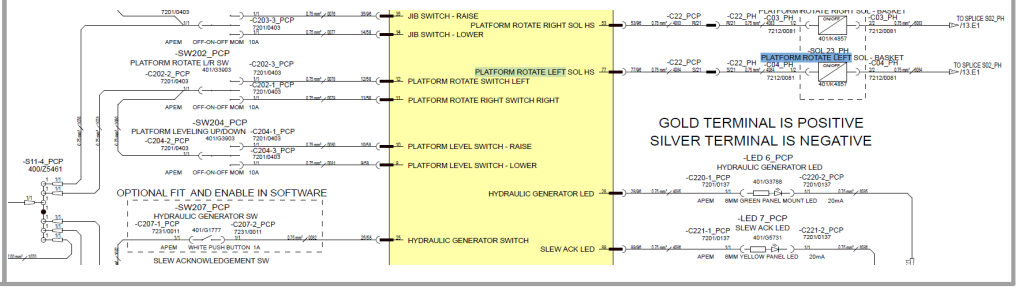

5.1.147 B1169-13

Error code:	**B1169-13**
ECU	Platform ECU
Description:	Platform rotate right output solenoid short circuit to high or open circuit
Component:	Platform rotate right output solenoid
Vehicle reaction:	Detect failure modes. Don't disable any output and don't ignore any input
Possible Cause:	1 A short circuit within the wiring harness 2. A short circuit to the chassis 3. A short circuit within the harness connectors 4. Water damage/ingress within the harness connectors 5. Damaged component
Service Action:	1. Fault indicates short to high or open circuit to Platform rotate right Solenoid. Check voltage at solenoid connector -C03_PH pin 1/2 greater than 10.5 volt and check coil resistance.

© 2026 JCB INDIA LTD

	2. Check continuity of GND path from Solenoid connector -C03_PH pin 2/2 to Turntable GND & Check Ground wire 6083. 3. Check Interconnect -C22_PCP / -C22_PH pin R/21. Check bent / backed out pins, debris, shorts or water ingress. 4. Check Platform ECU terminal 53/96. Check Connector for bent / backed out pins, debris, shorts or water ingress. 5. Check wire #4083 for continuity from Platform ECU pin 53/96 to Platform rotate right Solenoid connector -C03_PH pin 1/2. 6. Check the harness for any abrasions, pinching or any other damage that may lead to a fault. 7. Check if valve is mechanically jammed 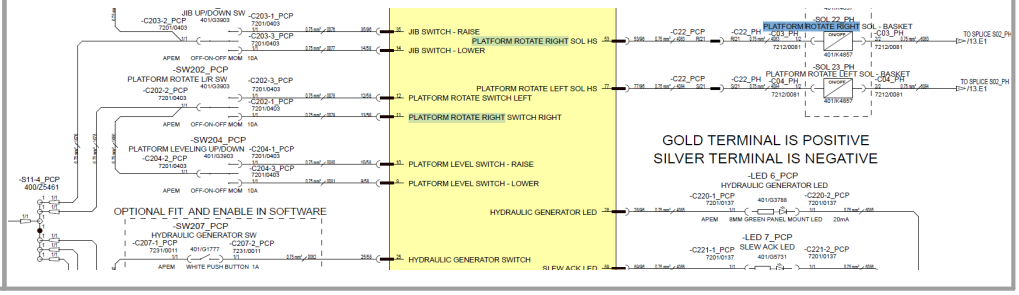

5.1.148 B1170-16

Error code:	B1170-16
ECU	Platform ECU
Description:	PLATFORM ROTATE RIGHT Solenoid Valve Short Circuit to Low
Component:	Platform rotate right solenoid
Vehicle reaction:	Detect failure modes. Don't disable any output and don't ignore any input
Possible Cause:	1. A short circuit within the wiring harness 2. A short circuit to the chassis 3. A short circuit within the harness connectors 4. Water damage/ingress within the harness connectors 5. Damaged component

© 2026 JCB INDIA LTD

Service Action:	1. Fault indicates short to high or open circuit to Platform rotate right Solenoid. Check voltage at solenoid connector -C03_PH pin 1/2 greater than 10.5 volt and check coil resistance. 2. Check continuity of GND path from Solenoid connector -C03_PH pin 2/2 to Turntable GND & Check Ground wire 6083. 3. Check Interconnect -C22_PCP / -C22_PH pin R/21. Check bent / backed out pins, debris, shorts or water ingress. 4. Check Platform ECU terminal 53/96. Check Connector for bent / backed out pins, debris, shorts or water ingress. 5. Check wire #4083 for continuity from Platform ECU pin 53/96 to Platform rotate right Solenoid connector -C03_PH pin 1/2. 6. Check the harness for any abrasions, pinching or any other damage that may lead to a fault. 7. Check if valve is mechanically jammed 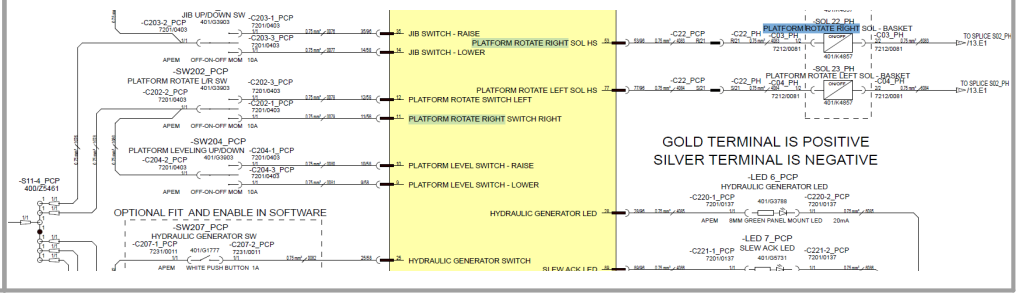

5.1.149 B1171-13

Error code:	**B1171-13**
ECU	Platform ECU
Description:	JIB RAISE Solenoid Valve short circuit to high or open circuit
Component:	JIB RAISE Solenoid Valve
Vehicle reaction:	Detect failure modes. Don't disable any output and don't ignore any input
Possible Cause:	1. A short circuit within the wiring harness 2. A short circuit to the chassis 3. A short circuit within the harness connectors

© 2026 JCB INDIA LTD

	4. Water damage/ingress within the harness connectors 5. Damaged component
Service Action:	1. Fault indicates short to high or open circuit to JIB RAISE Solenoid. Check voltage at solenoid connector -C02_PH pin 1/2 greater than 10.5 volt and check coil resistance. 2. Check continuity of GND path from Solenoid connector -C02_PH pin 2/2 to Turntable GND & Check Ground wire 6082. 3. Check Interconnect -C22_PCP / -C22_PH pin P/21. Check bent / backed out pins, debris, shorts or water ingress. 4. Check Platform ECU terminal 78/96. Check Connector for bent / backed out pins, debris, shorts or water ingress. 5. Check wire #4082 for continuity from Platform ECU pin 78/96 to JIB RAISE Solenoid connector -C02_PH pin 1/2. 6. Check the harness for any abrasions, pinching or any other damage that may lead to a fault. 7. Check if valve is mechanically jammed 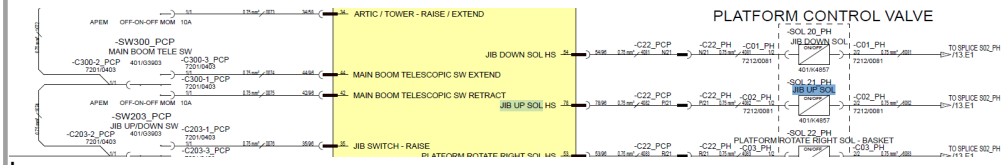

5.1.150 B1172-16

Error code:	**B1172-16**
ECU	Platform ECU
Description:	JIB RAISE Solenoid Valve Short Circuit to Low
Component:	JIB RAISE Solenoid Valve
Vehicle reaction:	Detect failure modes. Dont disable any output and dont ignore any input
Possible Cause:	1. A short circuit within the wiring harness 2. A short circuit to the chassis

© 2026 JCB INDIA LTD

	3. A short circuit within the harness connectors 4. Water damage/ingress within the harness connectors 5. Damaged component
Service Action:	1. Fault indicates short to high or open circuit to JIB RAISE Solenoid. Check voltage at solenoid connector -C02_PH pin 1/2 greater than 10.5 volt and check coil resistance. 2. Check continuity of GND path from Solenoid connector -C02_PH pin 2/2 to Turntable GND & Check Ground wire 6082. 3. Check Interconnect -C22_PCP / -C22_PH pin P/21. Check bent / backed out pins, debris, shorts or water ingress. 4. Check Platform ECU terminal 78/96. Check Connector for bent / backed out pins, debris, shorts or water ingress. 5. Check wire #4082 for continuity from Platform ECU pin 78/96 to JIB RAISE Solenoid connector -C02_PH pin 1/2. 6. Check the harness for any abrasions, pinching or any other damage that may lead to a fault. 7. Check if valve is mechanically jammed 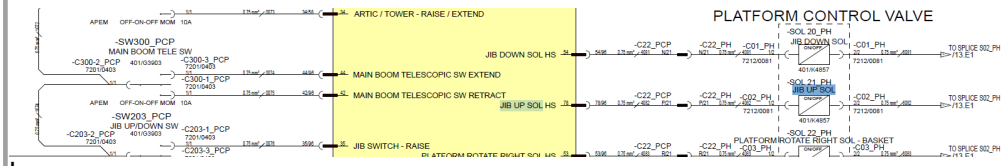

5.1.151 B1173-13

Error code:	**B1173-13**
ECU	Platform ECU
Description:	JIB LOWER Solenoid Valve short circuit to high or open circuit
Component:	JIB LOWER Solenoid Valve
Vehicle reaction:	Detect failure modes. Don't disable any output and don't ignore any input

© 2026 JCB INDIA LTD

Possible Cause:	1. A short circuit within the wiring harness 2. A short circuit to the chassis 3. A short circuit within the harness connectors 4. Water damage/ingress within the harness connectors 5. Damaged component
Service Action:	1. Fault indicates short to high or open circuit to JIB LOWER Solenoid. Check voltage at solenoid connector -C01_PH pin 1/2 greater than 10.5 volt and check coil resistance. 2. Check continuity of GND path from Solenoid connector -C01_PH pin 2/2 to Turntable GND & Check Ground wire 6081. 3. Check Interconnect -C22_PCP / -C22_PH pin N/21. Check bent / backed out pins, debris, shorts or water ingress. 4. Check Platform ECU terminal 54/96. Check Connector for bent / backed out pins, debris, shorts or water ingress. 5. Check wire #4081 for continuity from Platform ECU pin 54/96 to JIB LOWER Solenoid connector -C01_PH pin 1/2. 6. Check the harness for any abrasions, pinching or any other damage that may lead to a fault. 7. Check if valve is mechanically jammed 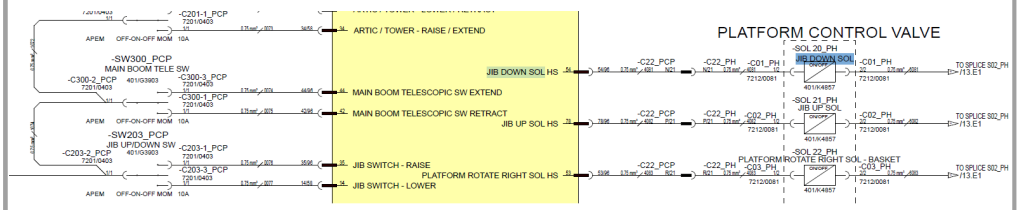

5.1.152 B1174-16

Error code:	**B1174-16**
ECU	Platform ECU
Description:	JIB LOWER Solenoid Valve Short Circuit to Low
Component:	JIB LOWER Solenoid Valve

© 2026 JCB INDIA LTD

Vehicle reaction:	Detect failure modes. Don't disable any output and don't ignore any input
Possible Cause:	1. A short circuit within the wiring harness 2. A short circuit to the chassis 3. A short circuit within the harness connectors 4. Water damage/ingress within the harness connectors 5. Damaged component
Service Action:	1. Fault indicates short to high or open circuit to JIB LOWER Solenoid. Check voltage at solenoid connector -C01_PH pin 1/2 greater than 10.5 volt and check coil resistance. 2. Check continuity of GND path from Solenoid connector -C01_PH pin 2/2 to Turntable GND & Check Ground wire 6081. 3. Check Interconnect -C22_PCP / -C22_PH pin N/21. Check bent / backed out pins, debris, shorts or water ingress. 4. Check Platform ECU terminal 54/96. Check Connector for bent / backed out pins, debris, shorts or water ingress. 5. Check wire #4081 for continuity from Platform ECU pin 54/96 to JIB LOWER Solenoid connector -C01_PH pin 1/2. 6. Check the harness for any abrasions, pinching or any other damage that may lead to a fault. 7. Check if valve is mechanically jammed 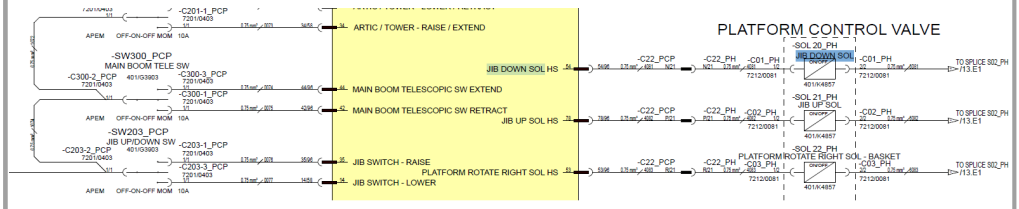

5.1.153 B1175-13

Error code:	**B1175-13**
ECU	Base ECU
Description:	MAIN BOOM LIFT/SLEW DIRECTIONAL Solenoid Valve Short Circuit to High or Open Circuit

© 2026 JCB INDIA LTD

Component :	MAIN BOOM LIFT/SLEW DIRECTIONAL Solenoid Valve
Vehicle reaction:	Detect failure modes. Don't disable any output and don't ignore any input
Possible Cause:	1. A short circuit within the wiring harness 2. A short circuit to the chassis 3. A short circuit within the harness connectors 4. Water damage/ingress within the harness connectors 5. Damaged component
Service Action:	1. Fault indicates short to high or open circuit to MAIN BOOM LIFT/SLEW DIRECTIONAL Solenoid. Check voltage at solenoid connector -C13_TH pin 1/2 greater than 10.5 volt and check coil resistance. 2. Check continuity of GND path from Solenoid connector -C13_TH pin 2/2 to Turntable GND & Check Ground wire 6062. 3. Check bent / backed out pins, debris, shorts or water ingress. 4. Check Base ECU terminal 1/96. Check Connector for bent / backed out pins, debris, shorts or water ingress. 5. Check wire #4062 for continuity from Base ECU pin 1/96 to MAIN BOOM LIFT/SLEW DIRECTIONAL Solenoid connector -C13_PH pin 1/2. 6. Check the harness for any abrasions, pinching or any other damage that may lead to a fault. 7. Check if valve is mechanically jammed. 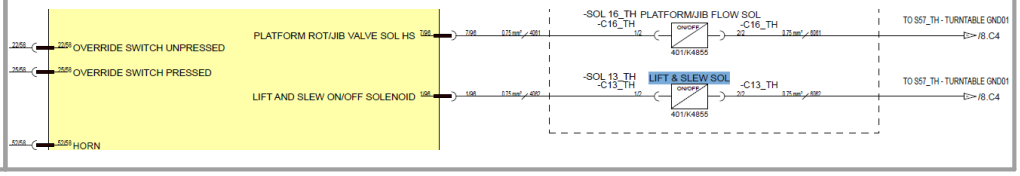

5.1.154 B1176-16

Error code:	**B1176-16**
ECU	Base ECU
Description :	MAIN BOOM LIFT/SLEW DIRECTIONAL Solenoid Valve Short Circuit to Low

© 2026 JCB INDIA LTD

Component:	MAIN BOOM LIFT/SLEW DIRECTIONAL Solenoid Valve
Vehicle reaction:	Detect failure modes. Don't disable any output and don't ignore any input
Possible Cause:	1. A short circuit within the wiring harness 2. A short circuit to the chassis 3. A short circuit within the harness connectors 4. Water damage/ingress within the harness connectors 5. Damaged component
Service Action:	1. Fault indicates short to high or open circuit to MAIN BOOM LIFT/SLEW DIRECTIONAL Solenoid. Check voltage at solenoid connector -C13_TH pin 1/2 greater than 10.5 volt and check coil resistance. 2. Check continuity of GND path from Solenoid connector -C13_TH pin 2/2 to Turntable GND & Check Ground wire 6062. 3. Check bent / backed out pins, debris, shorts or water ingress. 4. Check Base ECU terminal 1/96. Check Connector for bent / backed out pins, debris, shorts or water ingress. 5. Check wire #4062 for continuity from Base ECU pin 1/96 to MAIN BOOM LIFT/SLEW DIRECTIONAL Solenoid connector -C13_PH pin 1/2. 6. Check the harness for any abrasions, pinching or any other damage that may lead to a fault. 7. Check if valve is mechanically jammed. 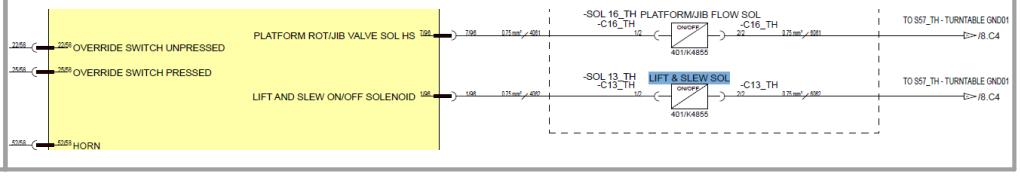

5.1.155 B1177-16

Error code:	**B1177-16**
ECU	Base ECU
Description:	BUZZER Short Circuit to Low

© 2026 JCB INDIA LTD

Component :	Buzzer
Vehicle reaction:	Detect failure mode.
Possible Cause:	1. A short circuit within the wiring harness 2. A short circuit to the chassis 3. A short circuit within the harness connectors 4. Water damage/ingress within the harness connectors 5. Damaged component
Service Action:	1. Check condition of Wire #4024 from Base Bosch ECU Pin 90/96 to Panel Interconnect -C50_TH. Check condition of wire 4024 from Panel interconnect -C50_TCP to Buzzer holder -RB07_TCP pin 1. 2. Check above wires for any shorts to GND / Chassis. Look for damage to harness, especially abrasions and pinching. 3. Check the interconnects for debris or stray wire etc that may cause short circuit. Check Buzzer holder -RB07_TCP. Check Bosch ECU connectors for bent pins or debris / stray wires. 4. Check all above connectors for water damage. 5. Remove buzzer and check wire resistance again, check buzzer for damage.  

© 2026 JCB INDIA LTD

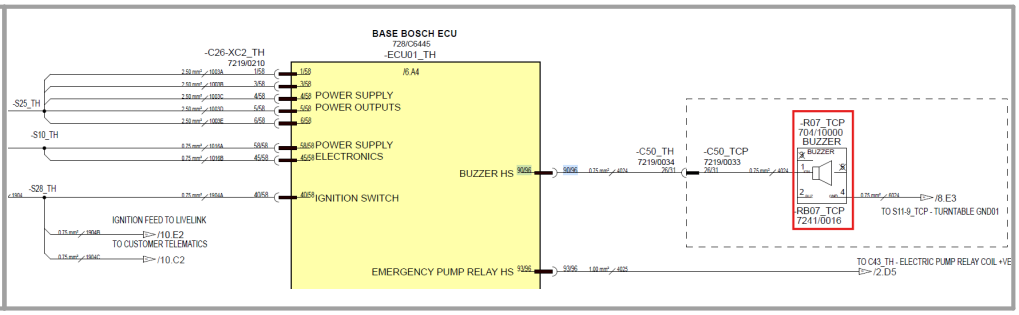

5.1.156 B1178-13

Error code:	B1178-13
ECU	Base ECU
Description:	BUZZER Open Circuit OR Short Circuit to High
Component:	Buzzer
Vehicle reaction:	Detect failure mode.
Possible Cause:	1. A short circuit within the wiring harness 2. A short circuit within the harness connectors 3. Water damage/ingress within the harness connectors 4. Damaged component
Service Action:	1. Check condition of Wire #4024 from Base Bosch ECU Pin 90/96 to Panel Interconnect -C50_TH. Check condition of wire 4024 from Panel interconnect -C50_TCP to Buzzer holder -RB07_TCP pin 1. 2. Check the interconnects for debris or stray wire etc that may cause short circuit. Check Buzzer holder -RB07_TCP. Check Bosch ECU connectors for bent pins or debris / stray wires. 3. Check all above connectors for water damage. 4. Check above wires for any shorts to High (>10V). Look for damage to harness, especially abrasions and pinching. Remove buzzer and check wire resistance again, check buzzer for damage.

© 2026 JCB INDIA LTD

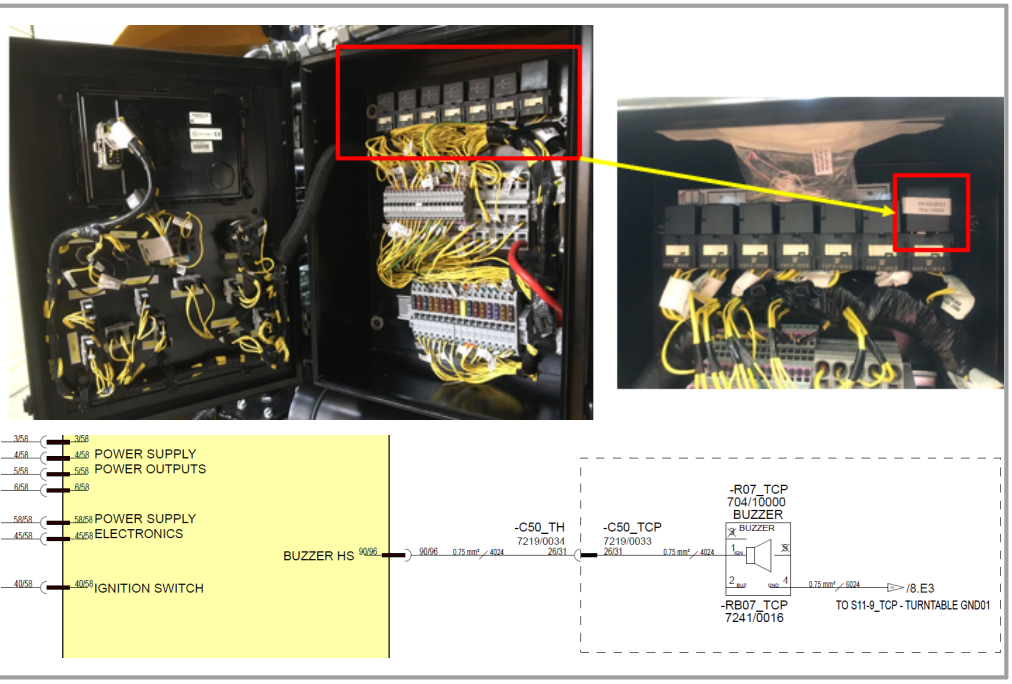

5.1.157 B1179-13

Error code:	B1179-13
ECU	Base ECU
Description:	Beacon(s) - Beacon 1 Open Circuit or Short Circuit to High.
Component:	Beacon 1
Vehicle reaction:	Detect failure mode.
Possible Cause:	1. A short or open circuit within the wiring harness 2. A short circuit within the harness connectors 3. Water damage/ingress within the harness connectors 4. Damaged component
Service Action:	Check Wiring & Continuity • Verify continuity between: ○ Beacon 1 connector -C20_TH pin 1/2 ○ Base Bosch ECU -C26-XC2_TH Pin 43/58 (Wire #4032)

© 2026 JCB INDIA LTD

- Ensure Wire #4032 is not shorted to high voltage.

Inspect Connectors

- Check Beacon connector and ECU connectors for:
  - Bent pins
  - Stray wires causing shorts
  - Correct wire termination

Check for Water Ingress

- Inspect both connectors for:
  - Moisture
  - Corrosion
  - Debris

Beacon Condition

- Examine the Beacon for:
  - Physical damage
  - Cracks or broken housing
  - Secure mounting



© 2026 JCB INDIA LTD

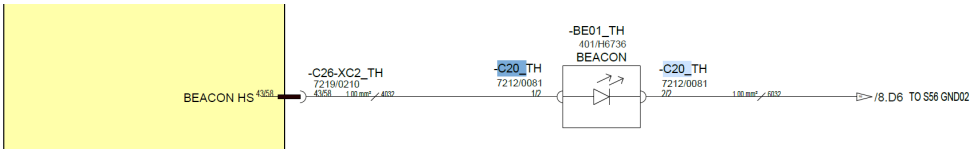

5.1.158 B1180-16

Error code:	B1180-16
ECU	Base ECU
Description:	Beacon(s) - Beacon 1 Short Circuit to Low.
Component:	Beacon 1
Vehicle reaction:	Detect failure mode.
Possible Cause:	1. A short circuit within the wiring harness 2. A short circuit to the chassis 3. A short circuit within the harness connectors 4. Water damage/ingress within the harness connectors 5. Damaged component
Service Action:	1. Check continuity between Beacon 1 connector -C20_TH pin 1/2 and Base Bosch ECU -C26-XC2_TH Pin 43/58 (Wire #4032). 2. Check Wire #4032 not short circuit to GND. Check for abrasions and pinching of the harness. 3. Check Beacon connector and ECU Connectors. Ensure no bent pins or stray wire causing short circuit. Ensure wires correctly terminated. 4. Check Beacon connector and ECU Connectors for any water ingress. 5. Check Beacon for any damage.

© 2026 JCB INDIA LTD



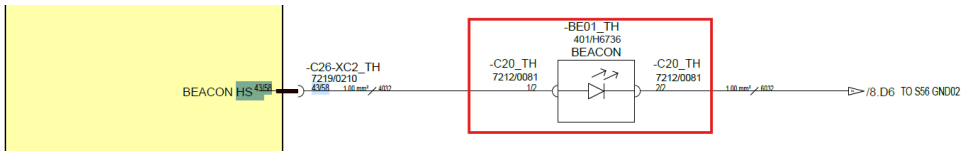

5.1.159 B1181-16

Error code:	B1181-16
ECU	Base ECU
Description:	Horn - Horn High Side Short Circuit to Low.
Component:	Horn Relay
Vehicle reaction:	Detect failure mode.
Possible Cause:	1. A short circuit within the wiring harness 2. A short circuit to the chassis 3. A short circuit within the harness connectors 4. Water damage/ingress within the harness connectors 5. Damaged component
Service Action:	1. Check wiring between 'C26-XC2_TH Pin 44/58 on the Bosch Base ECU Connector' and 'Pin 4 on the Horn Relay Base'.

© 2026 JCB INDIA LTD

	2. Check the wiring has not shorted to the chassis of the machine (caused perhaps by pinching or abrasion). 3. Disconnect 'C26-XC2_TH Bosch Base ECU Connector' and check terminal 44/58 ensuring that nothing is touching it. Same with Pin 4 at the Horn Relay Base. 4. Check connectors are dry and free of debris. Check for damaged pins on the 'C26-XC2_TH Bosch Base ECU Connector'. 5. Check operation of the system. Check for physical damage to the Horn Relay, connectors and other harness components. 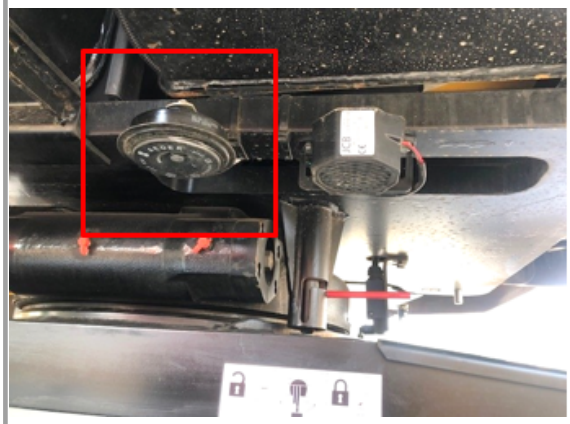 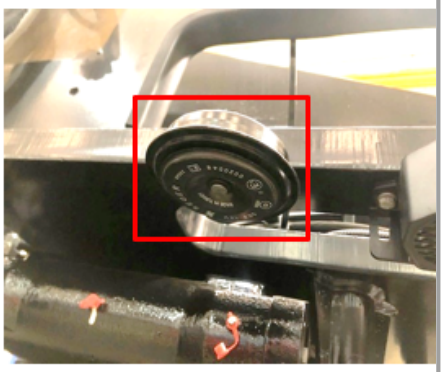 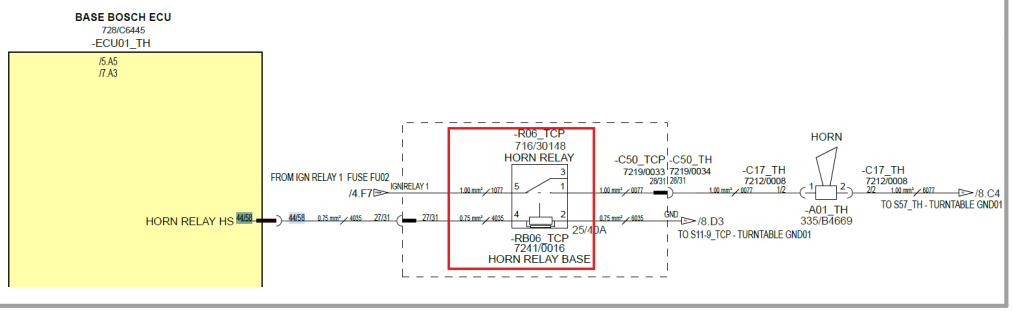 </td>

5.1.160 B1182-13

Error code:	B1182-13
ECU	Base ECU
Description:	Horn - Horn High Side Open Circuit.
Component:	Horn Relay
Vehicle reaction:	Detect failure mode.

© 2026 JCB INDIA LTD

Possible Cause:	1. A poor connection or damaged terminal within the connector(s) 2. A damaged or broken wire within the wiring harness 3. Component is damaged
Service Action:	1. Ensure all terminals are seated correctly with no damage at 'C26-XC2_TH Pin 44/58 on the Bosch Base ECU Connector' and 'Pin 4 on the Horn Relay Base'. 2. Check for continuity with a multimeter between 'C26-XC2_TH Pin 44/58 on the Bosch Base ECU Connector' and 'Pin 4 on the Horn Relay Base'. 3. Check operation of the system. Check for physical damage to the Horn Relay, connectors and other harness components.  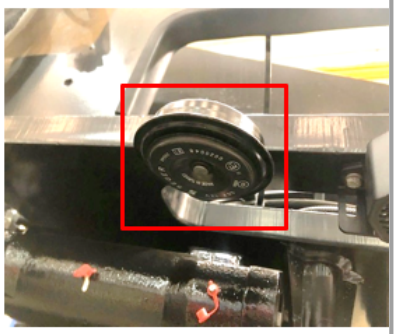 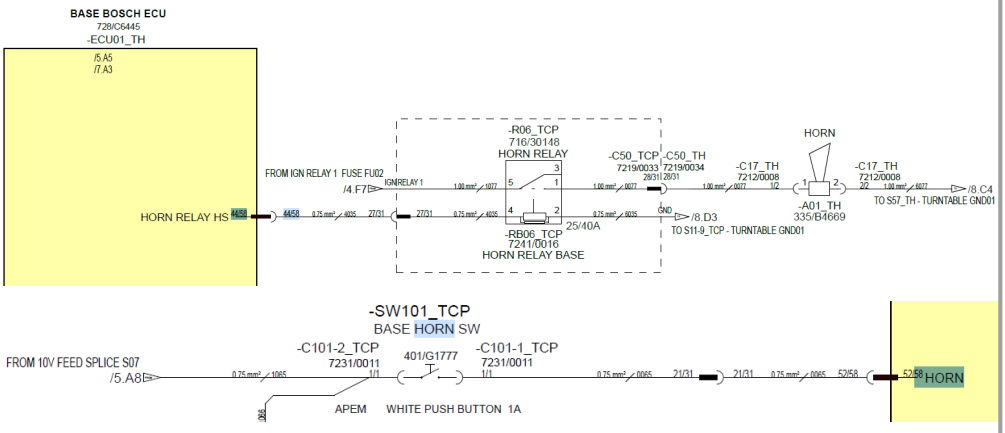

5.1.161 B1183-16

Error code:	**B1183-16**

© 2026 JCB INDIA LTD

ECU	Base ECU
Description:	White Noise Alarm - White Noise Alarm Short Circuit to Low.
Component:	White Noise Alarm
Vehicle reaction:	Detect failure mode.
Possible Cause:	1. A short circuit within the wiring harness 2. A short circuit to the chassis 3. A short circuit within the harness connectors 4. Water damage/ingress within the harness connectors 5. Damaged component
Service Action:	1. Check wiring (#4036) between 'C26-XC2_TH Pin 56/58 on the Bosch Base ECU Connector' and 'C34_TH on the White Noise Alarm'. 2. Check the wiring (#4036) has not shorted to the chassis of the machine (caused perhaps by pinching or abrasion). 3. Disconnect 'C26-XC2_TH Bosch Base ECU Connector' and check terminal 56/58 ensuring that nothing is touching it. Same with 'C34_TH on the White Noise Alarm'. 4. Check connectors are dry and free of debris. Check for damaged pins on the 'C26-XC2_TH Bosch Base ECU Connector'. 5. Check operation of the system. Check for physical damage to the White Noise Alarm, connectors and other harness components. 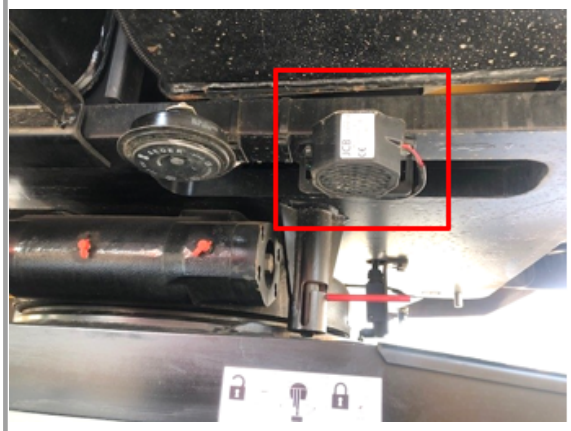 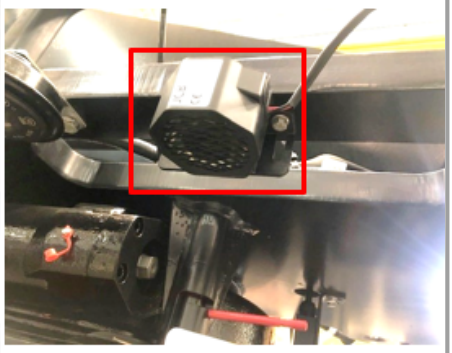

© 2026 JCB INDIA LTD

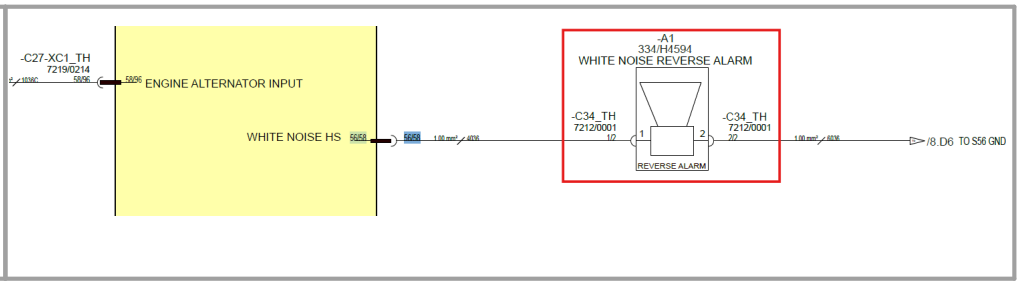

5.1.162 B1184-13

Error code:	B1184-13
ECU	Base ECU
Description:	White Noise Alarm - White Noise Alarm Open Circuit or Short Circuit to High.
Component:	White Noise Alarm
Vehicle reaction:	Detect failure mode.
Possible Cause:	1. A short or open circuit within the wiring harness 2. A short circuit within the harness connectors 3. Water damage/ingress within the harness connectors 4. Damaged component
Service Action:	Continuity Check • Verify continuity between: ○ White Noise Alarm connector C34_TH Pin 1/2 ○ Base Bosch ECU connector C26-XC2_TH Pin 56/58 ○ These are connected via Wire #4036. • Ensure Wire #4036 is not shorted to high (+12V). Connector Inspection • Check White Noise Alarm connector and ECU connectors for: ○ Bent pins ○ Backed-out pins ○ Stray wires causing shorts ○ Correct wire termination

© 2026 JCB INDIA LTD

Water Ingress

- Inspect both connectors for moisture or corrosion that could cause intermittent faults.

Component Condition

- Check the White Noise Alarm unit for:
  - Physical damage
  - Signs of overheating or cracks

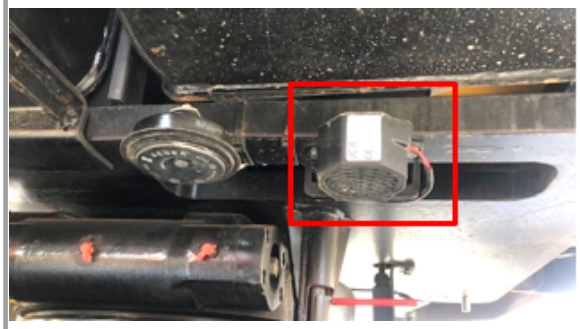

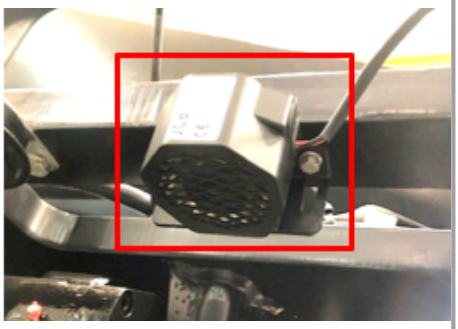

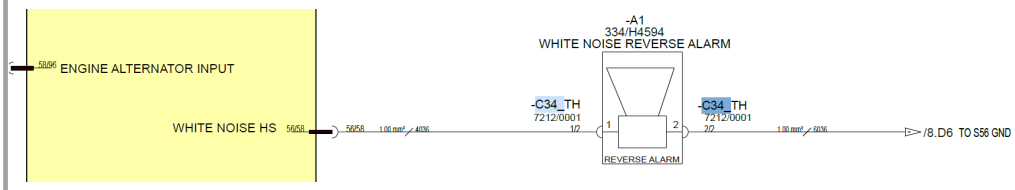

5.1.163 B1186-16

Error code:	B1186-16
ECU	Platform ECU
Description:	HYDRAULIC GENERATOR LED Short Circuit to Low
Component:	HYDRAULIC GENERATOR LED
Vehicle reaction:	Detect failure mode.

© 2026 JCB INDIA LTD

Possible Cause:	1. A short circuit within the wiring harness 2. A short circuit within the harness connectors 3. Water damage/ingress within the harness connectors 4. Damaged component
Service Action:	1. Check voltage at LED Light connector -C220-1_PCP pin 1/1 greater than 10.5 volt. 2. Check continuity of GND path from LED light connector C-220-2_PCP pin 2/2 to Turntable GND & Check Ground wire 6085. 3. Check bent / backed out pins, debris, shorts or water ingress. 4. Check Platform ECU terminal 28/96. Check Connector for bent / backed out pins, debris, shorts or water ingress. 5. Check wire #4085 for continuity from Platform ECU pin 28/96 to LED light connector -C220-1_PCP pin 1/2. 6. Check the harness for any abrasions, pinching or any other damage that may lead to a fault. 7 .If there is continuity and we are getting 10V supply then it may be internal damage to LED light. 8. If issue still there replace the LED light. 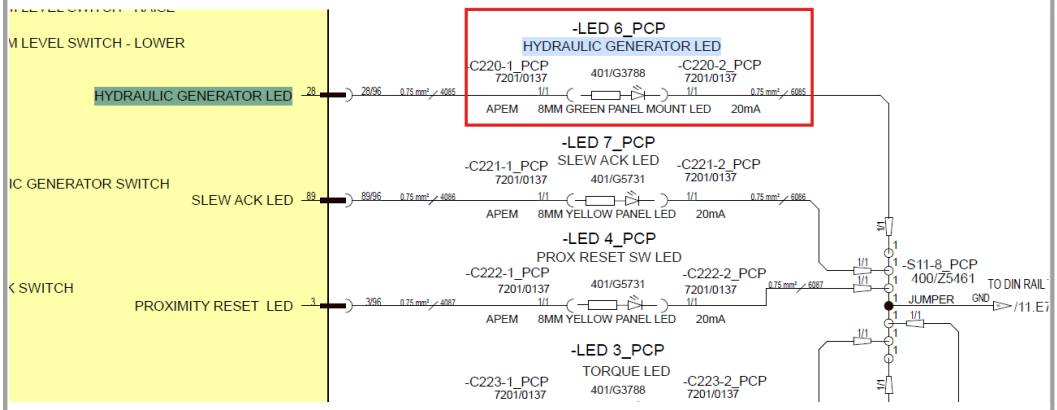

5.1.164 B1187-13

Error code:	**B1187-13**
ECU	Platform ECU

© 2026 JCB INDIA LTD

Description :	HYDRAULIC GENERATOR LED Open Circuit
Component :	HYDRAULIC GENERATOR LED
Vehicle reaction:	Detect failure mode.
Possible Cause:	1. A short circuit within the wiring harness 2. A short circuit within the harness connectors 3. Water damage/ingress within the harness connectors 4. Damaged component
Service Action:	1. Check voltage at LED Light connector -C220-1_PCP pin 1/1 greater than 10.5 volt. 2. Check continuity of GND path from LED light connector C-220-2_PCP pin 2/2 to Turntable GND & Check Ground wire 6085. 3. Check bent / backed out pins, debris, shorts or water ingress. 4. Check Platform ECU terminal 28/96. Check Connector for bent / backed out pins, debris, shorts or water ingress. 5. Check wire #4085 for continuity from Platform ECU pin 28/96 to LED light connector -C220-1_PCP pin 1/2. 6. Check the harness for any abrasions, pinching or any other damage that may lead to a fault. 7 .If there is continuity and we are getting 10V supply then it may be internal damage to LED light. 8. If issue still there replace the LED light. 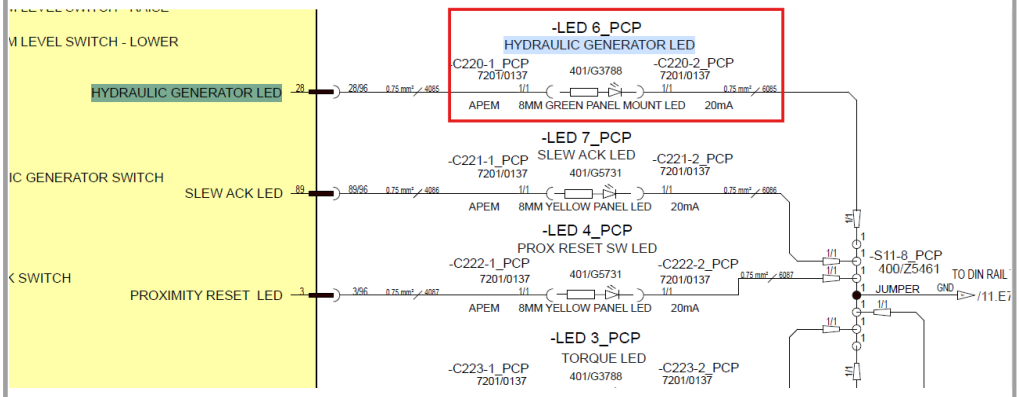

© 2026 JCB INDIA LTD

5.1.165 **B1188-16**

Error code:	**B1188-16**
ECU	Platform ECU
Description:	Caution LED short circuit to low
Component:	Caution LED
Vehicle reaction:	Detect failure mode
Possible Cause:	1. A short circuit within the wiring harness 2. A short circuit within the harness connectors 3. Water damage/ingress within the harness connectors 4. Damaged component
Service Action:	1. Check voltage at LED Light connector -C38-1_PCP pin 1/1 greater than 10.5 volt. 2. Check continuity of GND path from LED light connector C-38-2_PCP pin 2/2 to Turntable GND & Check Ground wire 6077. 3. Check bent / backed out pins, debris, shorts or water ingress. 4. Check Platform ECU terminal 6/96. Check Connector for bent / backed out pins, debris, shorts or water ingress. 5. Check wire #4077 for continuity from Platform ECU pin 6/96 to LED light connector -C38-1_PCP pin 1/2. 6. Check the harness for any abrasions, pinching or any other damage that may lead to a fault. 7 .If there is continuity and we are getting 10V supply then it may be internal damage to LED light. 8. If issue still there replace the LED light.

© 2026 JCB INDIA LTD

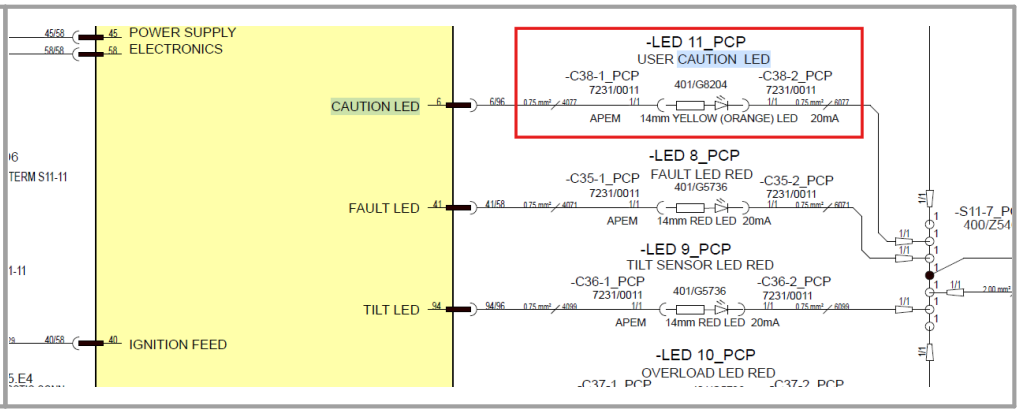

5.1.166 B1189-13

Error code:	B1189-13
ECU	Platform ECU
Description:	Caution LED open circuit
Component:	Caution LED
Vehicle reaction:	Detect failure mode
Possible Cause:	1. A short circuit within the wiring harness 2. A short circuit within the harness connectors 3. Water damage/ingress within the harness connectors 4. Damaged component
Service Action:	1. Check voltage at LED Light connector -C38-1_PCP pin 1/1 greater than 10.5 volt. 2. Check continuity of GND path from LED light connector C-38-2_PCP pin 2/2 to Turntable GND & Check Ground wire 6077. 3. Check bent / backed out pins, debris, shorts or water ingress. 4. Check Platform ECU terminal 6/96. Check Connector for bent / backed out pins, debris, shorts or water ingress. 5. Check wire #4077 for continuity from Platform ECU pin 6/96 to LED light connector -C38-1_PCP pin 1/2. 6. Check the harness for any abrasions, pinching or any other damage that may lead to a fault.

© 2026 JCB INDIA LTD

	7 .If there is continuity and we are getting 10V supply then it may be internal damage to LED light. 8. If issue still there replace the LED light. 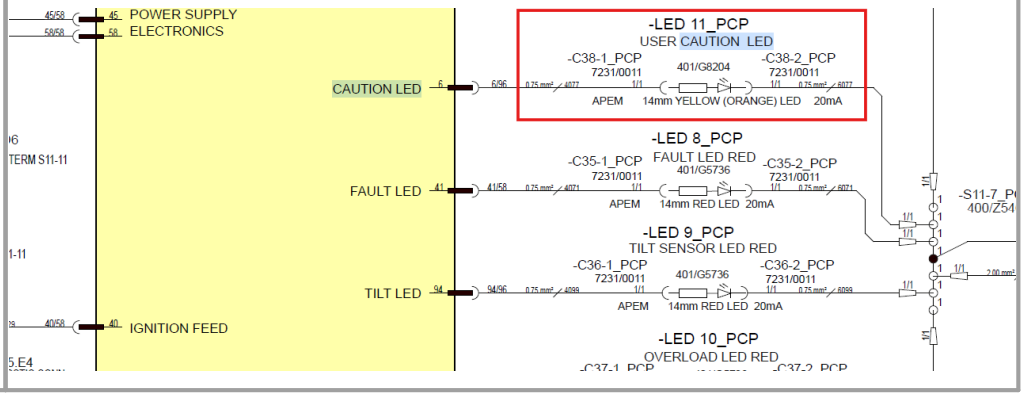

5.1.167 B1190-16

Error code:	B1190-16
ECU	Platform ECU
Description:	Fault Indicator - Fault LED Short Circuit to Low.
Component:	Fault LED
Vehicle reaction:	Detect failure mode.
Possible Cause:	1. A short circuit within the wiring harness 2. A short circuit to the chassis 3. A short circuit within the harness connectors 4. Water damage/ingress within the harness connectors 5. Damaged component
Service Action:	1. Check wiring between 'C26-XC2_PCP Pin 41/58 on the Bosch Platform ECU Connector' and 'C35-1_PCP on the Fault LED'. 2. Check the wiring has not shorted to the chassis of the machine (caused perhaps by pinching or abrasion).

© 2026 JCB INDIA LTD

	3. Disconnect 'C26-XC2_PCP Bosch Platform ECU Connector' and check terminal 41/58 ensuring that nothing is touching it. Same with 'C35-1_PCP on the Fault LED'. 4. Check connectors are dry and free of debris. Check for damaged pins on the 'C26-XC2_PCP Bosch Platform ECU Connector'. 5. Check operation of the system. Check for physical damage to the Fault LED, connectors and other harness components.  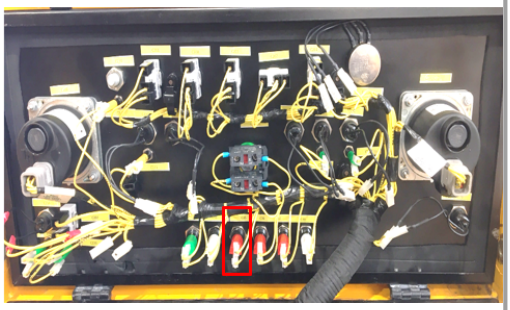 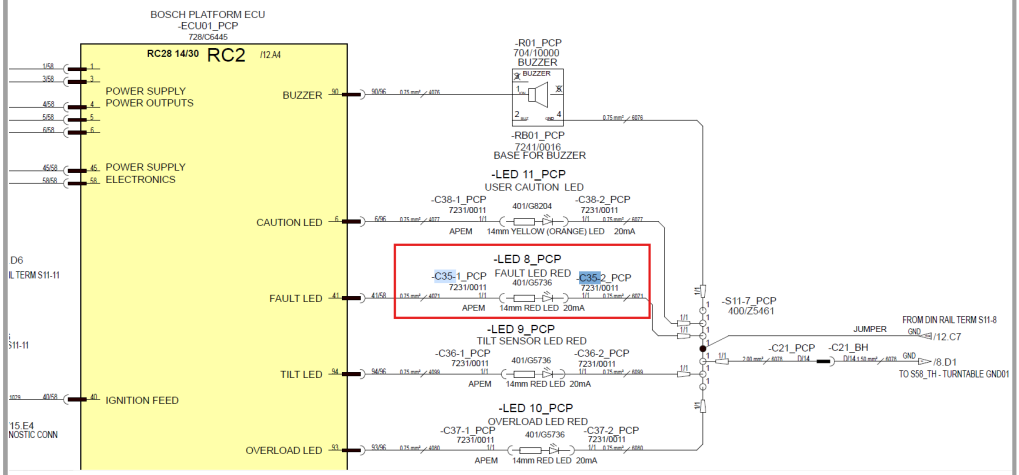

5.1.168 B1191-17

Error code:	B1191-17
ECU	Platform ECU
Description:	Fault Indicator - Fault LED Short Circuit to High.
Component:	Fault LED
Vehicle reaction:	Detect failure mode.

© 2026 JCB INDIA LTD

Possible Cause:	1. A short circuit within the wiring harness 2. A short circuit within the harness connectors 3. Water damage/ingress within the harness connectors 4. Damaged component
Service Action:	1. Check wiring between 'C26-XC2_PCP Pin 41/58 on the Bosch Platform ECU Connector' and 'C35-1_PCP on the Fault LED'. 2. Disconnect 'C26-XC2_PCP Bosch Platform ECU Connector' and check terminal 41/58 ensuring that nothing is touching it. Same with 'C35-1_PCP on the Fault LED'. 3. Check connectors are dry and free of debris. Check for damaged terminals on the 'C26-XC2_PCP Bosch Platform ECU Connector'. 4. Check operation of the system. Check for physical damage to the LED, connectors and other harness components.  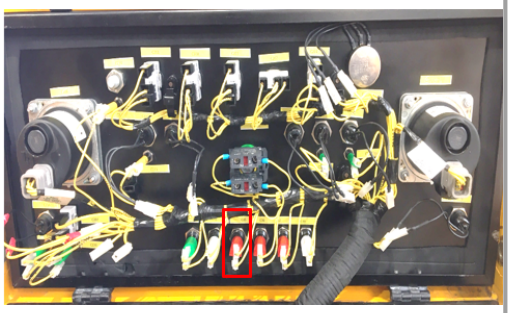 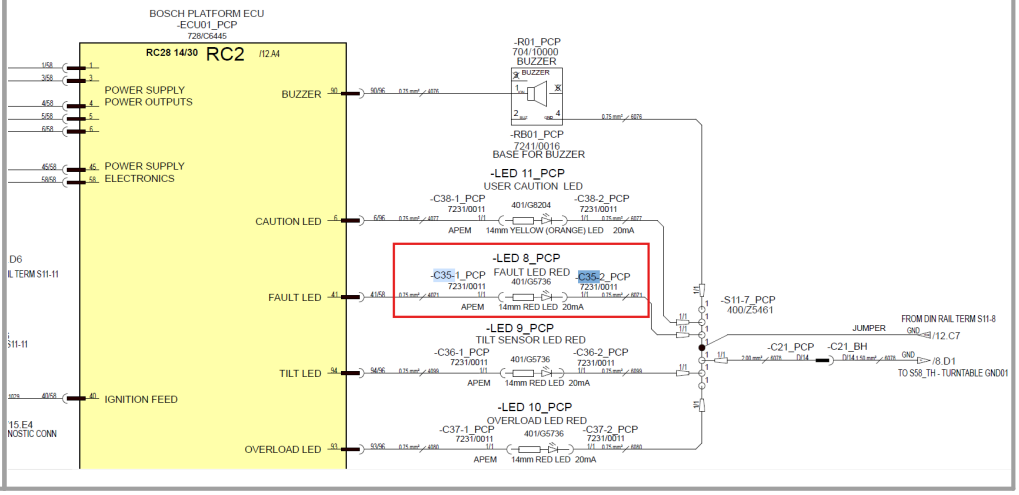

5.1.169 B1192-16

Error code:	**B1192-16**
ECU	Platform ECU

© 2026 JCB INDIA LTD

Description :	Tilt LED short circuit to low
Component :	Tilt LED
Vehicle reaction:	Detect failure mode
Possible Cause:	1. A short circuit within the wiring harness 2. A short circuit within the harness connectors 3. Water damage/ingress within the harness connectors 4. Damaged component
Service Action:	1. Check voltage at LED Light connector -C36-1_PCP pin 1/1 greater than 10.5 volt. 2. Check continuity of GND path from LED light connector C-36-2_PCP pin 2/2 to Turntable GND & Check Ground wire 6099. 3. Check bent / backed out pins, debris, shorts or water ingress. 4. Check Platform ECU terminal 6/96. Check Connector for bent / backed out pins, debris, shorts or water ingress. 5. Check wire #4099 for continuity from Platform ECU pin 94/96 to LED light connector -C36-1_PCP pin 1/2. 6. Check the harness for any abrasions, pinching or any other damage that may lead to a fault. 7 .If there is continuity and we are getting 10V supply then it may be internal damage to LED light. 8. If issue still there replace the LED light. 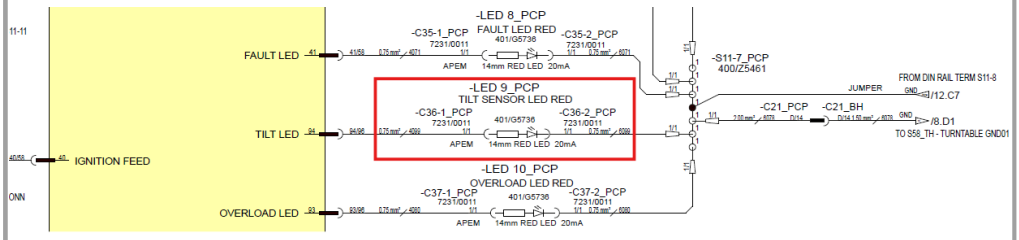

© 2026 JCB INDIA LTD

5.1.170 B1193-13

Error code:	B1193-13
ECU	Platform ECU
Description:	Tilt LED open circuit
Component:	Tilt LED
Vehicle reaction:	Detect failure mode
Possible Cause:	1. A short circuit within the wiring harness 2. A short circuit within the harness connectors 3. Water damage/ingress within the harness connectors 4. Damaged component
Service Action:	1. Check voltage at LED Light connector -C36-1_PCP pin 1/1 greater than 10.5 volt. 2. Check continuity of GND path from LED light connector C-36-2_PCP pin 2/2 to Turntable GND & Check Ground wire 6099. 3. Check bent / backed out pins, debris, shorts or water ingress. 4. Check Platform ECU terminal 6/96. Check Connector for bent / backed out pins, debris, shorts or water ingress. 5. Check wire #4099 for continuity from Platform ECU pin 94/96 to LED light connector -C36-1_PCP pin 1/2. 6. Check the harness for any abrasions, pinching or any other damage that may lead to a fault. 7 .If there is continuity and we are getting 10V supply then it may be internal damage to LED light. 8. If issue still there replace the LED light.

© 2026 JCB INDIA LTD

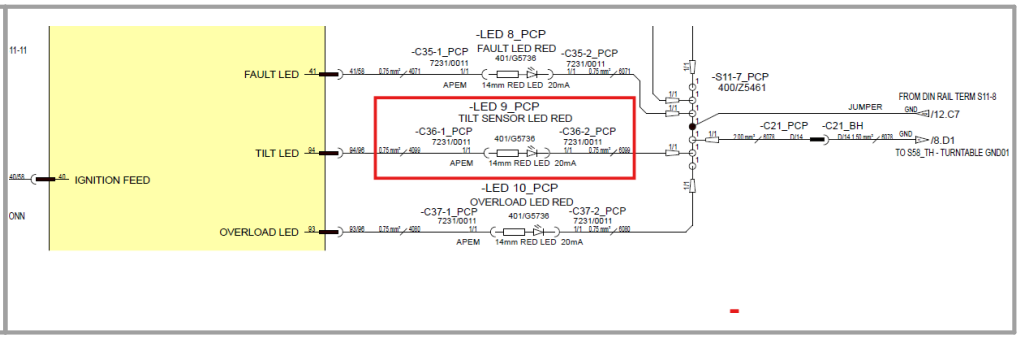

5.1.171 B1194-16

Error code:	B1194-16
ECU	Platform ECU
Description:	Overload LED short circuit to low
Component:	Overload LED
Vehicle reaction:	Detect failure mode
Possible Cause:	1. A short circuit within the wiring harness 2. A short circuit within the harness connectors 3. Water damage/ingress within the harness connectors 4. Damaged component
Service Action:	1. Check voltage at LED Light connector -C37-1_PCP pin 1/1 greater than 10.5 volt. 2. Check continuity of GND path from LED light connector C-37-2_PCP pin 2/2 to Turntable GND & Check Ground wire 6080. 3. Check bent / backed out pins, debris, shorts or water ingress. 4. Check Platform ECU terminal 93/96. Check Connector for bent / backed out pins, debris, shorts or water ingress. 5. Check wire #4080 for continuity from Platform ECU pin 93/96 to LED light connector -C37-1_PCP pin 1/2. 6. Check the harness for any abrasions, pinching or any other damage that may lead to a fault.

© 2026 JCB INDIA LTD

	7 .If there is continuity and we are getting 10V supply then it may be internal damage to LED light. 8. If issue still there replace the LED light. 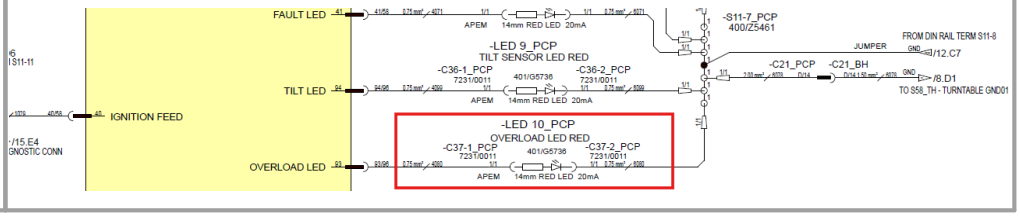

5.1.172 B1195-13

Error code:	B1195-13
ECU	Platform ECU
Description:	Overload LED open circuit
Component:	Overload LED
Vehicle reaction:	Detect failure mode
Possible Cause:	1. A short circuit within the wiring harness 2. A short circuit within the harness connectors 3. Water damage/ingress within the harness connectors 4. Damaged component
Service Action:	1. Check voltage at LED Light connector -C37-1_PCP pin 1/1 greater than 10.5 volt. 2. Check continuity of GND path from LED light connector C-37-2_PCP pin 2/2 to Turntable GND & Check Ground wire 6080. 3. Check bent / backed out pins, debris, shorts or water ingress. 4. Check Platform ECU terminal 93/96. Check Connector for bent / backed out pins, debris, shorts or water ingress. 5. Check wire #4080 for continuity from Platform ECU pin 93/96 to LED light connector -C37-1_PCP pin 1/2. 6. Check the harness for any abrasions, pinching or any other damage that may lead to a fault.

© 2026 JCB INDIA LTD

	7 .If there is continuity and we are getting 10V supply then it may be internal damage to LED light. 8. If issue still there replace the LED light. 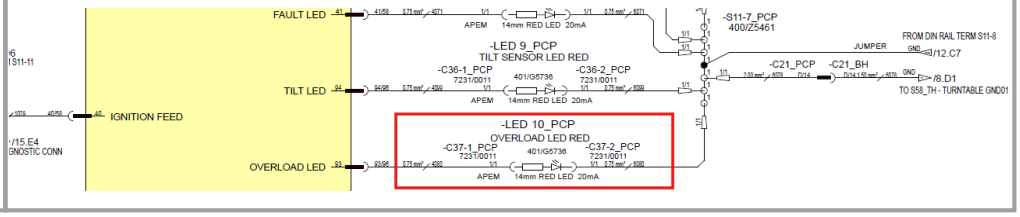

5.1.173 B1196-16

Error code:	B1196-16
ECU	Platform ECU
Description:	Low fuel LED short circuit to low
Component:	Low fuel LED
Vehicle reaction:	Detect failure mode
Possible Cause:	1. A short circuit within the wiring harness 2. A short circuit within the harness connectors 3. Water damage/ingress within the harness connectors 4. Damaged component
Service Action:	1. Check voltage at LED Light connector -C39-1_PCP pin 1/1 greater than 10.5 volt. 2. Check continuity of GND path from LED light connector C-39-2_PCP pin 2/2 to Turntable GND & Check Ground wire 6090. 3. Check bent / backed out pins, debris, shorts or water ingress. 4. Check Platform ECU terminal 42/58. Check Connector for bent / backed out pins, debris, shorts or water ingress. 5. Check wire #4090 for continuity from Platform ECU pin 42/58 to LED light connector -C39-1_PCP pin 1/2. 6. Check the harness for any abrasions, pinching or any other damage that may lead to a fault.

© 2026 JCB INDIA LTD

	7 .If there is continuity and we are getting 10V supply then it may be internal damage to LED light. 8. If issue still there replace the LED light. 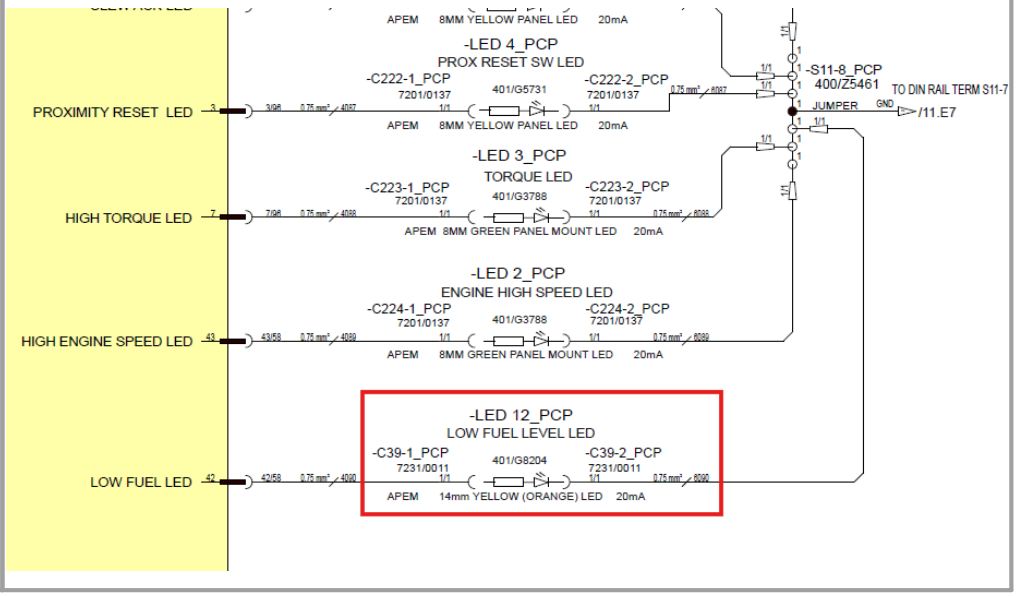

5.1.174 B1197-13

Error code:	B1197-13
ECU	Platform ECU
Description:	Low fuel LED open circuit
Component:	Low fuel LED
Vehicle reaction:	Detect failure mode
Possible Cause:	1. A short circuit within the wiring harness 2. A short circuit within the harness connectors 3. Water damage/ingress within the harness connectors 4. Damaged component
Service Action:	1. Check voltage at LED Light connector -C39-1_PCP pin 1/1 greater than 10.5 volt.

© 2026 JCB INDIA LTD

	2. Check continuity of GND path from LED light connector C-39-2_PCP pin 2/2 to Turntable GND & Check Ground wire 6090. 3. Check bent / backed out pins, debris, shorts or water ingress. 4. Check Platform ECU terminal 42/58. Check Connector for bent / backed out pins, debris, shorts or water ingress. 5. Check wire #4090 for continuity from Platform ECU pin 42/58 to LED light connector -C39-1_PCP pin 1/2. 6. Check the harness for any abrasions, pinching or any other damage that may lead to a fault. 7 .If there is continuity and we are getting 10V supply then it may be internal damage to LED light. 8. If issue still there replace the LED light. 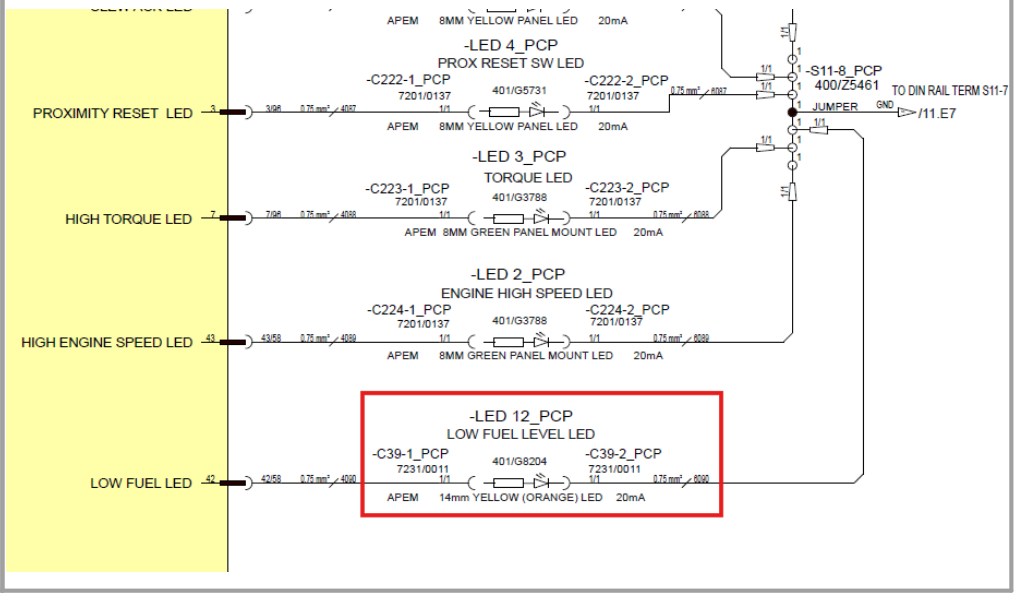

5.1.175 B1198-16

Error code:	B1198-16
ECU	Platform ECU
Description:	Slew Acknowledgment - Slew Acknowledgment LED Short Circuit to Low.
Component:	Slew Acknowledgment LED

© 2026 JCB INDIA LTD

Vehicle reaction:	Detect failure mode
Possible Cause:	1. A short circuit within the wiring harness 2. A short circuit to the chassis 3. A short circuit within the harness connectors 4. Water damage/ingress within the harness connectors 5. Damaged component
Service Action:	1. Disconnect connector -C221-1_PCP from the rear of the Slew Acknowledge LED on the Platform Control Panel. Measure resistance from Terminal to GND. If a short exists, check wire #4086 to Platform Bosch ECU pin 89/96. 2. Check Wire #4086 is not shorted to GND / Chassis. Check for abrasions and pinching. 3. Check condition of pins in Platform Bosch ECU. Check for Bent pins, debris or stray wires causing a short. 4. Check for water ingress in the Platform Bosch ECU Connectors. 5. Check LED for damage or shorting to connector -C221-2_PCP  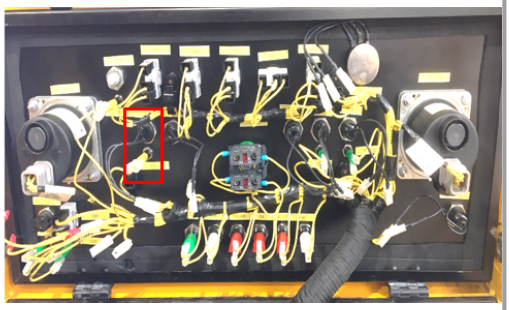 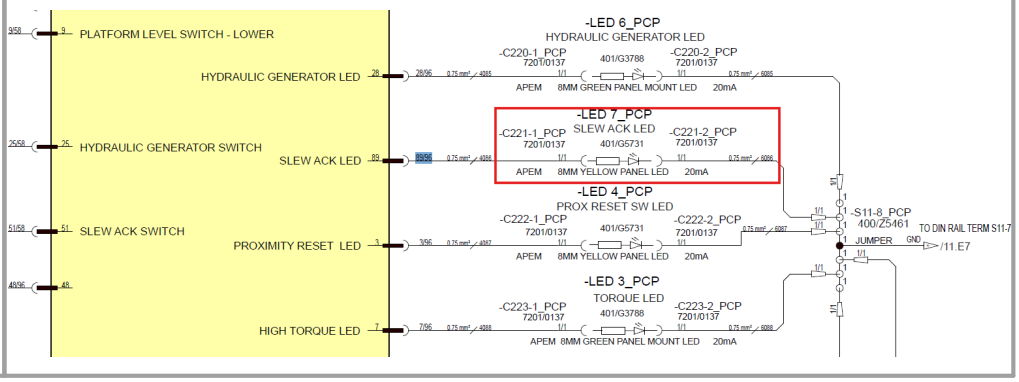

© 2026 JCB INDIA LTD

5.1.176 B1199-17

Error code:	B1199-17
ECU	Platform ECU
Description:	Slew Acknowledged - Slew Acknowledgment LED Short Circuit to High.
Component:	Slew Acknowledgment LED
Vehicle reaction:	Detect failure mode.
Possible Cause:	1. A short circuit within the wiring harness 2. A short circuit within the harness connectors 3. Water damage/ingress within the harness connectors 4. Damaged component
Service Action:	1. Disconnect connector -C221-1_PCP from the rear of the Slew Acknowledge LED on the Platform Control Panel. Measure voltage at terminal. If voltage is high >12V, check wire #4086 to Platform Bosch ECU pin 89/96. 2. Check condition of pins in Platform Bosch ECU. Check for Bent pins, debris or stray wires causing a short. 3. Check for water ingress in the Platform Bosch ECU Connectors. 4. Check LED for damage or any loose wiring in the control panel.  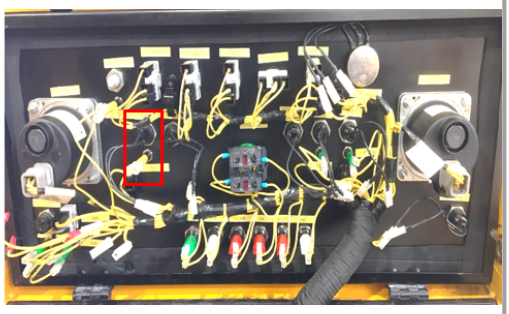

© 2026 JCB INDIA LTD

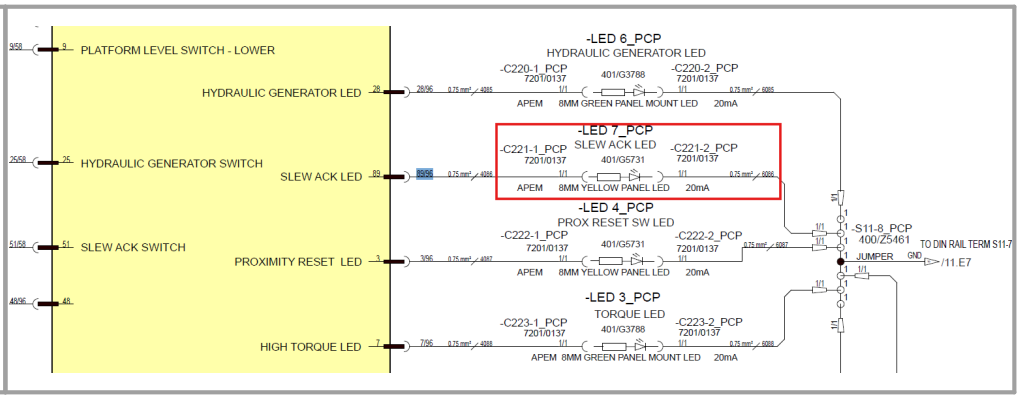

5.1.177 B1202-16

Error code:	B1202-16
ECU	Platform ECU
Description:	High torque LED output short circuit to low
Component:	High torque LED
Vehicle reaction:	Detect failure mode
Possible Cause:	1. A short circuit within the wiring harness 2. A short circuit within the harness connectors 3. Water damage/ingress within the harness connectors 4. Damaged component
Service Action:	1. Check voltage at LED Light connector -C223-1_PCP pin 1/2 greater than 10.5 volt. 2. Check continuity of GND path from LED light connector -223-2_PCP pin 2/2 to Turntable GND & Check Ground wire 6088. 3. Check bent / backed out pins, debris, shorts or water ingress. 4. Check Platform ECU terminal 7/96. Check Connector for bent / backed out pins, debris, shorts or water ingress. 5. Check wire #4088 for continuity from Platform ECU pin 7/96 to LED light connector -C223-1_PCP pin 1/2. 6. Check the harness for any abrasions, pinching or any other damage that may lead to a fault.

© 2026 JCB INDIA LTD

	7 .If there is continuity and we are getting 10V supply then it may be internal damage to LED light. 8. If issue still there replace the LED light. 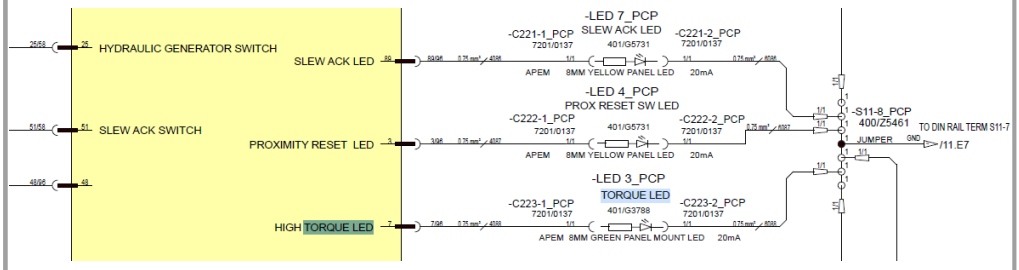

5.1.178 B1203-13

Error code:	B1203-13
ECU	Platform ECU
Description:	High torque LED output open circuit
Component:	High torque LED
Vehicle reaction:	Detect failure mode
Possible Cause:	1. A short circuit within the wiring harness 2. A short circuit within the harness connectors 3. Water damage/ingress within the harness connectors 4. Damaged component
Service Action:	1. Check voltage at LED Light connector -C223-1_PCP pin 1/2 greater than 10.5 volt. 2. Check continuity of GND path from LED light connector -223-2_PCP pin 2/2 to Turntable GND & Check Ground wire 6088. 3. Check bent / backed out pins, debris, shorts or water ingress. 4. Check Platform ECU terminal 7/96. Check Connector for bent / backed out pins, debris, shorts or water ingress.

© 2026 JCB INDIA LTD

	5. Check wire #4088 for continuity from Platform ECU pin 7/96 to LED light connector -C223-1_PCP pin 1/2. 6. Check the harness for any abrasions, pinching or any other damage that may lead to a fault. 7 .If there is continuity and we are getting 10V supply then it may be internal damage to LED light. 8. If issue still there replace the LED light. 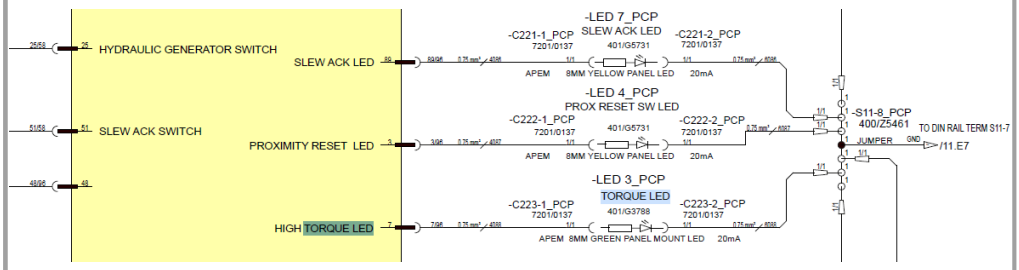

5.1.179 B1204-16

Error code:	B1204-16
ECU	Platform ECU
Description:	High Engine Speed LED output short circuit to low
Component:	High Engine Speed LED
Vehicle reaction:	Detect failure mode
Possible Cause:	1. A short circuit within the wiring harness 2. A short circuit within the harness connectors 3. Water damage/ingress within the harness connectors 4. Damaged component
Service Action:	1. Check voltage at LED Light connector -C224-1_PCP pin 1/2 greater than 10.5 volt. 2. Check continuity of GND path from LED light connector C-224-2_PCP pin 2/2 to Turntable GND & Check Ground wire 6089.

© 2026 JCB INDIA LTD

	3. Check bent / backed out pins, debris, shorts or water ingress. 4. Check Platform ECU terminal 43/58. Check Connector for bent / backed out pins, debris, shorts or water ingress. 5. Check wire #4089 for continuity from Platform ECU pin 43/58 to LED light connector -C224-1_PCP pin 1/2. 6. Check the harness for any abrasions, pinching or any other damage that may lead to a fault. 7 .If there is continuity and we are getting 10V supply then it may be internal damage to LED light. 8. If issue still there replace the LED light. 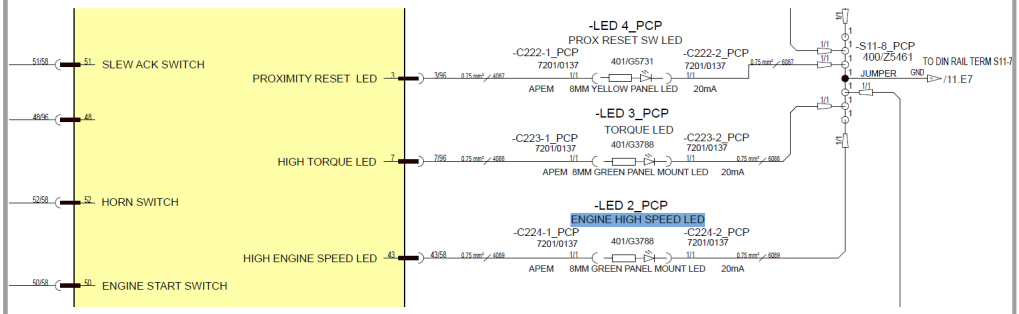

5.1.180 B1205-13

Error code:	B1205-13
ECU	Platform ECU
Description:	High Engine Speed LED output open circuit
Component:	High Engine Speed LED
Vehicle reaction:	Detect failure mode
Possible Cause:	1. A short circuit within the wiring harness 2. A short circuit within the harness connectors 3. Water damage/ingress within the harness connectors 4. Damaged component

© 2026 JCB INDIA LTD

Service Action:	1. Check voltage at LED Light connector -C224-1_PCP pin 1/2 greater than 10.5 volt. 2. Check continuity of GND path from LED light connector C-224-2_PCP pin 2/2 to Turntable GND & Check Ground wire 6089. 3. Check bent / backed out pins, debris, shorts or water ingress. 4. Check Platform ECU terminal 43/58. Check Connector for bent / backed out pins, debris, shorts or water ingress. 5. Check wire #4089 for continuity from Platform ECU pin 43/58 to LED light connector -C224-1_PCP pin 1/2. 6. Check the harness for any abrasions, pinching or any other damage that may lead to a fault. 7 .If there is continuity and we are getting 10V supply then it may be internal damage to LED light. 8. If issue still there replace the LED light. 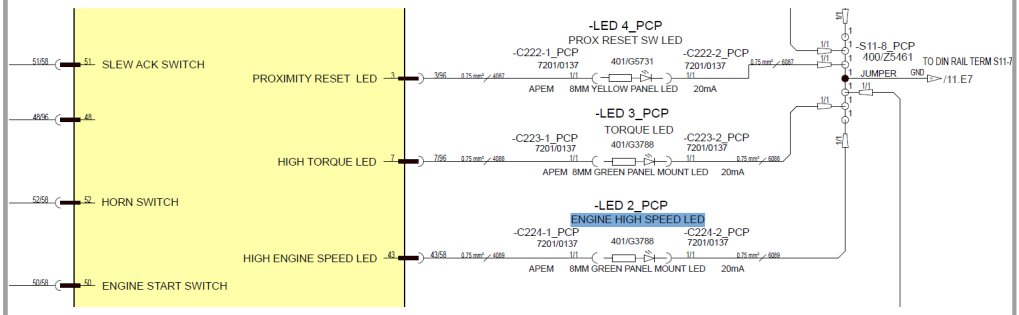

5.1.181 B1206-17

Error code:	**B1206-17**
ECU	Base ECU
Description:	Horn - Base Horn Button Short Circuit to High.
Component:	Horn Button
Vehicle reaction:	Detect failure mode; Ignore input

© 2026 JCB INDIA LTD

Possible Cause:	1. A short circuit within the wiring harness 2. A short circuit within the harness connectors 3. Water damage/ingress within the harness connectors 4. Damaged component
Service Action:	1. Check wiring between 'C26-XC2_TH Pin 52/58 on the Bosch Base ECU Connector' and 'C101-1_TH on the Base Horn Button'. 2. Disconnect 'C26-XC2_TH Bosch Base ECU Connector' and check terminal 52/58 ensuring that nothing is touching it. Same with 'C101-1_TH on the Base Horn Button'. 3. Check connectors are dry and free of debris. Check for damaged terminals on the 'C26-XC2_TH Bosch Base ECU Connector'. 4. Check operation of the Base Horn Button. Check for physical damage to the Horn Button, connectors and other harness components.





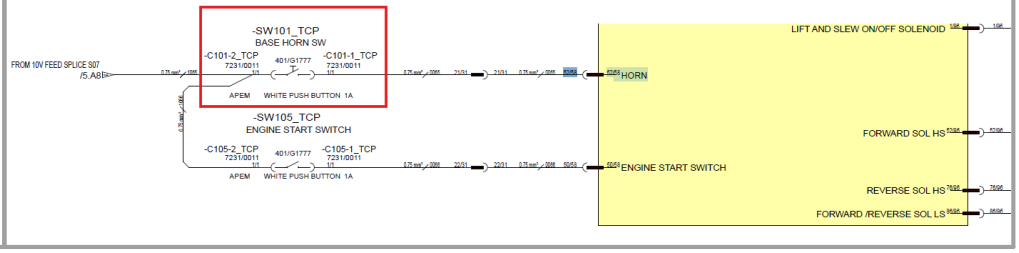

© 2026 JCB INDIA LTD

5.1.182 B1207-16

Error code:	B1207-16
ECU	Base ECU
Description:	Horn - Base Horn Button Short Circuit to Low.
Component:	Horn Button
Vehicle reaction:	Detect failure mode; Ignore input
Possible Cause:	1. A short circuit within the wiring harness 2. A short circuit to the chassis 3. A short circuit within the harness connectors 4. Water damage/ingress within the harness connectors 5. Damaged component
Service Action:	1. Check wiring between 'C26-XC2_TH Pin 52/58 on the Bosch Base ECU Connector' and 'C101-1_TCP on the Base Horn Button'. 2. Check the wiring has not shorted to the chassis of the machine (caused perhaps by pinching or abrasion). 3. Disconnect 'C26-XC2_TH Bosch Base ECU Connector' and check terminal 52/58 ensuring that nothing is touching it. Same with 'C101-1_TCP on the Base Horn Button'. 4. Check connectors are dry and free of debris. Check for damaged terminals on the 'C26-XC2_TH Bosch Base ECU Connector'. 5. Check operation of the Base Horn Button. Check for physical damage to the Horn Button, connectors and other harness components.

© 2026 JCB INDIA LTD





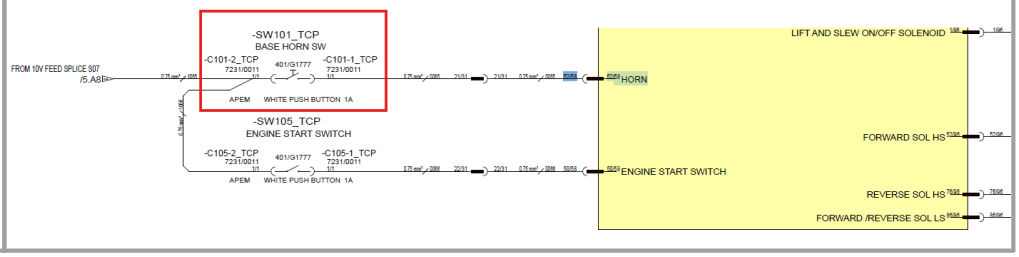

5.1.183 B1208-24

Error code:	B1208-24
ECU	Base ECU
Description:	Horn - Base Horn Button Stuck >10s.
Component:	Horn Button
Vehicle reaction:	Detect failure mode; Ignore input
Possible Cause:	1. A short circuit within the wiring harness 2. A short circuit within the harness connectors 3. Water damage/ingress within the harness connectors 4. Damaged component

© 2026 JCB INDIA LTD

Service Action:	1. Check wiring between 'C26-XC2_TH Pin 52/58 on the Bosch Base ECU Connector' and 'C101-1_TCP on the Base Horn Button'. 2. Disconnect 'C26-XC2_TH Bosch Base ECU Connector' and check terminal 52/58 ensuring that nothing is touching it. Same with 'C101-1_TCP on the Base Horn Button'. 3. Check connectors are dry and free of debris. Check for damaged terminals on the 'C26-XC2_TH Bosch Base ECU Connector'. 4. Check operation of the Base Horn Button. Check for physical damage to the Horn Button, connectors and other harness components.   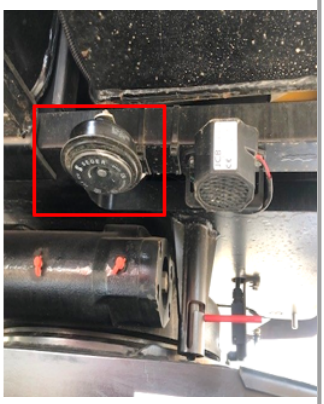 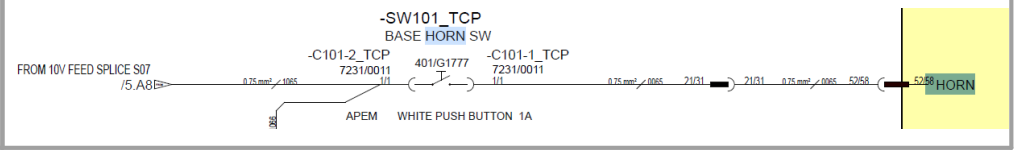

5.1.184 B1209-17

Error code:	**B1209-17**
ECU	Platform ECU
Description:	Engine Speed - Engine Speed Button Short Circuit to High.
Component:	High Engine Speed Button
Vehicle reaction:	Detect failure mode; Ignore input
Possible Cause:	1. A short circuit within the wiring harness 2. A short circuit within the harness connectors 3. Water damage/ingress within the harness connectors

© 2026 JCB INDIA LTD

	4. Damaged component
Service Action:	1. Disconnect connector -C211-2_PCP from the rear of the Engine Speed Button on the Platform Control Panel. Measure voltage at terminal. If voltage is high >12V, check wire #0088 to Platform Bosch ECU pin 48/58. 2. Check condition of pins in Platform Bosch ECU. Check for Bent pins, debris or stray wires causing a short. 3. Check for water ingress in the Platform Bosch ECU Connectors. 4. Check Switch for damage or any loose wiring in the control panel.  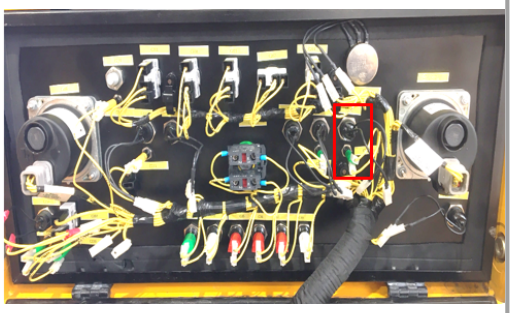 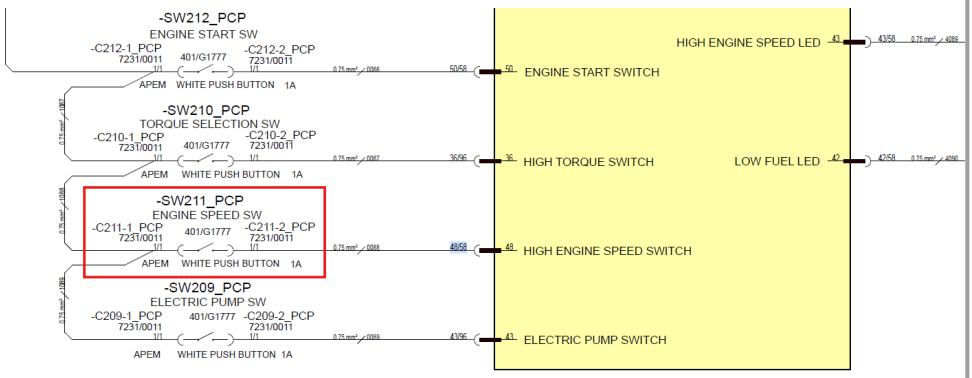

5.1.185 B1210-16

Error code:	**B1210-16**
ECU	Platform ECU
Description:	Engine Speed - Engine Speed Button Short Circuit to Low.
Component:	High Engine Speed Button
Vehicle reaction:	Detect failure mode; Ignore input

© 2026 JCB INDIA LTD

Possible Cause:	1. A short circuit within the wiring harness 2. A short circuit to the chassis 3. A short circuit within the harness connectors 4. Water damage/ingress within the harness connectors 5. Damaged component
Service Action:	1. Disconnect connector -C211-2_PCP from the rear of the Engine Speed Switch on the Platform Control Panel. Measure resistance from Terminal to GND. If a short exists, check wire #0088 to Platform Bosch ECU pin 48/58. 2. Check Wire #0088 is not shorted to GND / Chassis. Check for abrasions and pinching. 3. Check condition of pins in Platform Bosch ECU. Check for Bent pins, debris or stray wires causing a short. 4. Check for water ingress in the Platform Bosch ECU Connectors. 5. Check Switch for damage or shorting to connector -C211-2_PCP.



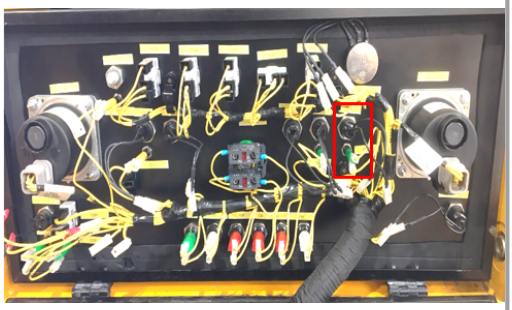

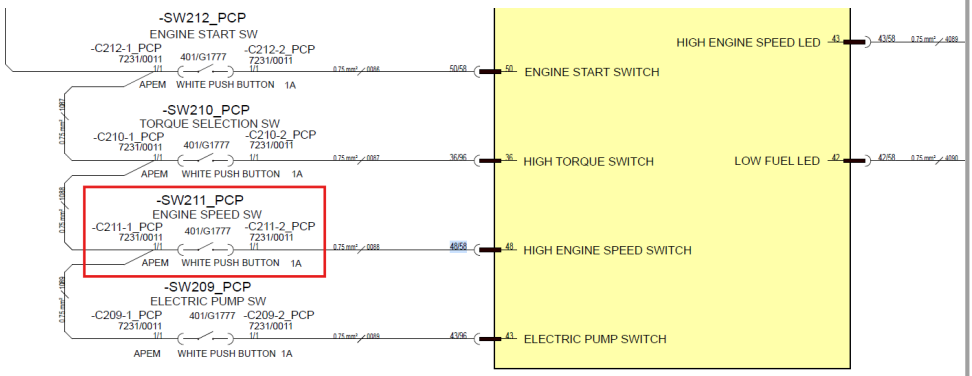

5.1.186 B1211-24

Error code:	**B1211-24**
ECU	Platform ECU

© 2026 JCB INDIA LTD

Description:	Engine Speed - Engine Speed Button Stuck >10s.
Component:	High Engine Speed Button
Vehicle reaction:	Detect failure mode; Ignore input
Possible Cause:	1. A short circuit within the wiring harness 2. A short circuit within the harness connectors 3. Water damage/ingress within the harness connectors 4. Damaged component
Service Action:	1. Disconnect connector -C211-2_PCP from the rear of the Engine Speed Switch on the Platform Control Panel. Measure voltage at terminal. If voltage is high >12V, check wire #0084 to Platform Bosch ECU pin 48/58. 2. Check condition of pins in Platform Bosch ECU. Check for Bent pins, debris or stray wires causing a short. 3. Check for water ingress in the Platform Bosch ECU Connectors. 4. Check operation of the system. Check for physical damage to the Engine Speed Switch, connectors and other harness components.   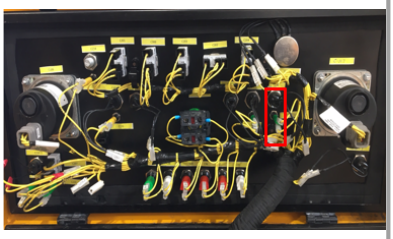 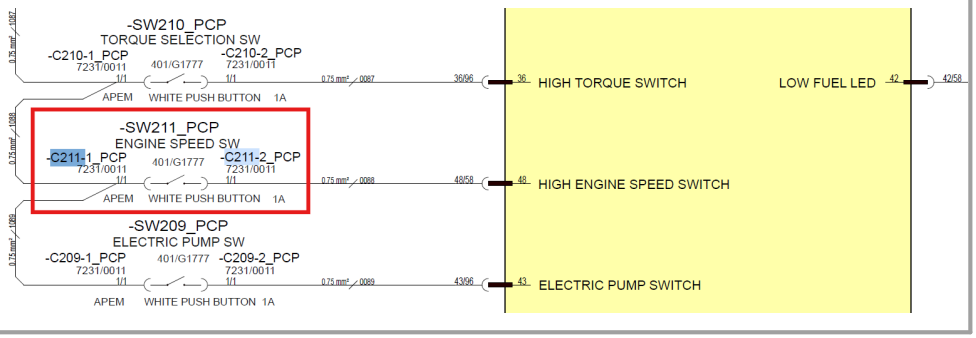

5.1.187 B1212-17

Error code:	**B1212-17**

© 2026 JCB INDIA LTD

ECU	Platform ECU
Description:	High Torque - High Torque Button Short Circuit to High.
Component:	High Torque Button
Vehicle reaction:	Detect failure mode; Ignore input
Possible Cause:	1. A short circuit within the wiring harness 2. A short circuit within the harness connectors 3. Water damage/ingress within the harness connectors 4. Damaged component
Service Action:	1. Disconnect connector -C210-2_PCP from the rear of the High Torque Button on the Platform Control Panel. Measure voltage at terminal. If voltage is high >12V, check wire #0087 to Platform Bosch ECU pin 36/96. 2. Check condition of pins in Platform Bosch ECU. Check for Bent pins, debris or stray wires causing a short. 3. Check for water ingress in the Platform Bosch ECU Connectors. 4. Check button for damage or any loose wiring in the control panel.  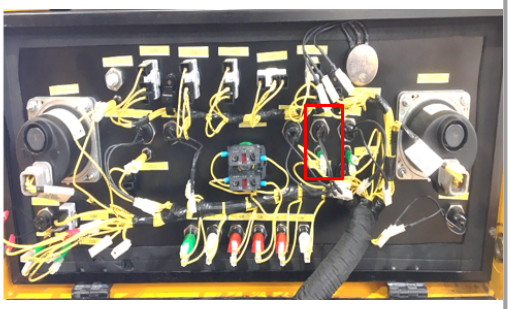 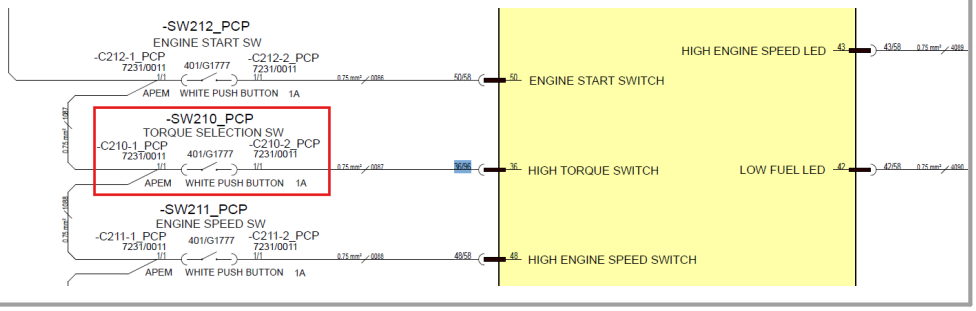

© 2026 JCB INDIA LTD

5.1.188 B1213-16

Error code:	B1213-16
ECU	Platform ECU
Description:	High Torque - High Torque Button Short Circuit to Low.
Component:	High Torque Button
Vehicle reaction:	Detect failure mode; Ignore input
Possible Cause:	1. A short circuit within the wiring harness 2. A short circuit to the chassis 3. A short circuit within the harness connectors 4. Water damage/ingress within the harness connectors 5. Damaged component
Service Action:	1. Disconnect connector -C210-2_PCP from the rear of the High Torque Button on the Platform Control Panel. Measure resistance from Terminal to GND. If a short exists, check wire #0087 to Platform Bosch ECU pin 36/96. 2. Check Wire #0087 is not shorted to GND / Chassis. Check for abrasions and pinching. 3. Check condition of pins in Platform Bosch ECU. Check for Bent pins, debris or stray wires causing a short. 4. Check for water ingress in the Platform Bosch ECU Connectors. 5. Check Switch for damage or shorting to connector -C210-2_PCP.  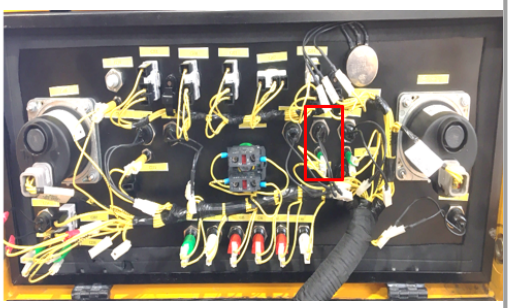

© 2026 JCB INDIA LTD

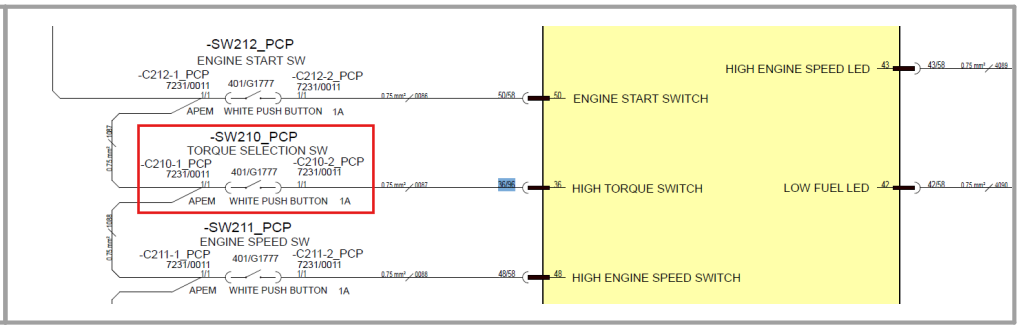

5.1.189 B1214-24

Error code:	B1214-24
ECU	Platform ECU
Description:	High Torque - High Torque Button Stuck >10s.
Component:	High Torque Button
Vehicle reaction:	Detect failure mode; Ignore input
Possible Cause:	1. A short circuit within the wiring harness 2. A short circuit within the harness connectors 3. Water damage/ingress within the harness connectors 4. Damaged component
Service Action:	1. Disconnect connector -C210-2_PCP from the rear of the High Torque Button on the Platform Control Panel. Measure voltage at terminal. If voltage is high >12V, check wire #0090 to Platform Bosch ECU pin 36/96. 2. Check condition of pins in Platform Bosch ECU. Check for Bent pins, debris or stray wires causing a short. 3. Check for water ingress in the Platform Bosch ECU Connectors. 4. Check operation of the system. Check for physical damage to the High Torque Button, connectors and other harness components.   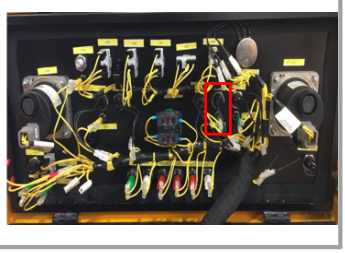

© 2026 JCB INDIA LTD

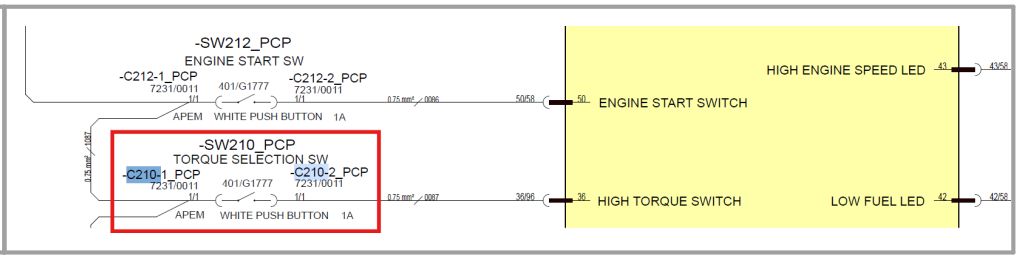

5.1.190 B1215-17

Error code:	B1215-17
ECU	Platform ECU
Description:	Hydraulic Generator - Hydraulic Generator Button Short Circuit to High.
Component:	Power to Platform Button
Vehicle reaction:	Detect failure mode; Ignore input
Possible Cause:	1. A short circuit within the wiring harness 2. A short circuit within the harness connectors 3. Water damage/ingress within the harness connectors 4. Damaged component
Service Action:	1. Disconnect connector -C207-2_PCP from the rear of the Hydraulic Generator Button on the Platform Control Panel. Measure voltage at terminal. If voltage is high >12V, check wire #0082 to Platform Bosch ECU pin 25/58. 2. Check condition of pins in Platform Bosch ECU. Check for Bent pins, debris or stray wires causing a short. 3. Check for water ingress in the Platform Bosch ECU Connectors. 4. Check Switch for damage or any loose wiring in the control panel.

© 2026 JCB INDIA LTD

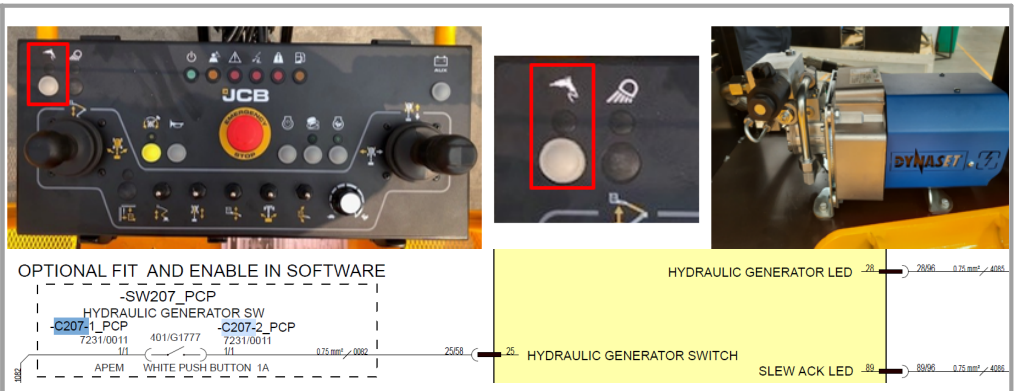

5.1.191 B1216-16

Error code:	B1216-16
ECU	Platform ECU
Description:	Hydraulic Generator - Hydraulic Generator Button Short Circuit to Low.
Component:	Power to Platform Button
Vehicle reaction:	Detect failure mode; Ignore input
Possible Cause:	1. A short circuit within the wiring harness 2. A short circuit to the chassis 3. A short circuit within the harness connectors 4. Water damage/ingress within the harness connectors 5. Damaged component
Service Action:	1. Disconnect connector -C207-2_PCP from the rear of the Hydraulic Generator Button on the Platform Control Panel. Measure resistance from Terminal to GND. If a short exists, check wire #0082 to Platform Bosch ECU pin 25/58. 2. Check Wire #0082 is not shorted to GND / Chassis. Check for abrasions and pinching. 3. Check condition of pins in Platform Bosch ECU. Check for Bent pins, debris or stray wires causing a short. 4. Check for water ingress in the Platform Bosch ECU Connectors.

© 2026 JCB INDIA LTD

	5. Check Switch for damage or shorting to connector -C207-2_PCP. 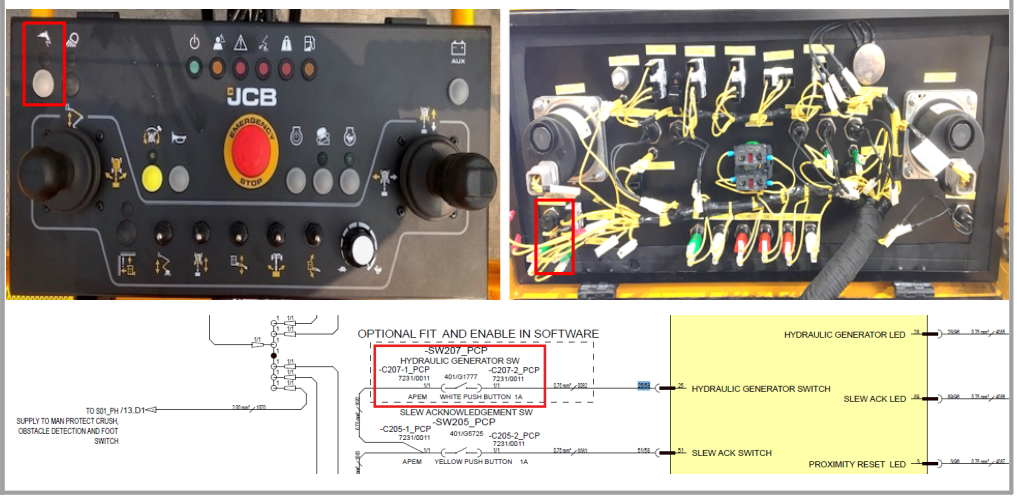

5.1.192 B1217-24

Error code:	B1217-24
ECU	Platform ECU
Description:	Hydraulic Generator - Hydraulic Generator Button Stuck >10s.
Component:	Power to Platform Button
Vehicle reaction:	Detect failure mode; Ignore input
Possible Cause:	1. A short circuit within the wiring harness 2. A short circuit within the harness connectors 3. Water damage/ingress within the harness connectors 4. Damaged component
Service Action:	1. Disconnect connector -C207-2_PCP from the rear of the Hydraulic Generator Button on the Platform Control Panel. Measure voltage at terminal. If voltage is high >12V, check wire #0082 to Platform Bosch ECU pin 25/58. 2. Check condition of pins in Platform Bosch ECU. Check for Bent pins, debris or stray wires causing a short. 3. Check for water ingress in the Platform Bosch ECU Connectors.

© 2026 JCB INDIA LTD

4. Check operation of the system. Check for physical damage to the Hydraulic Generator Button, connectors and other harness components.

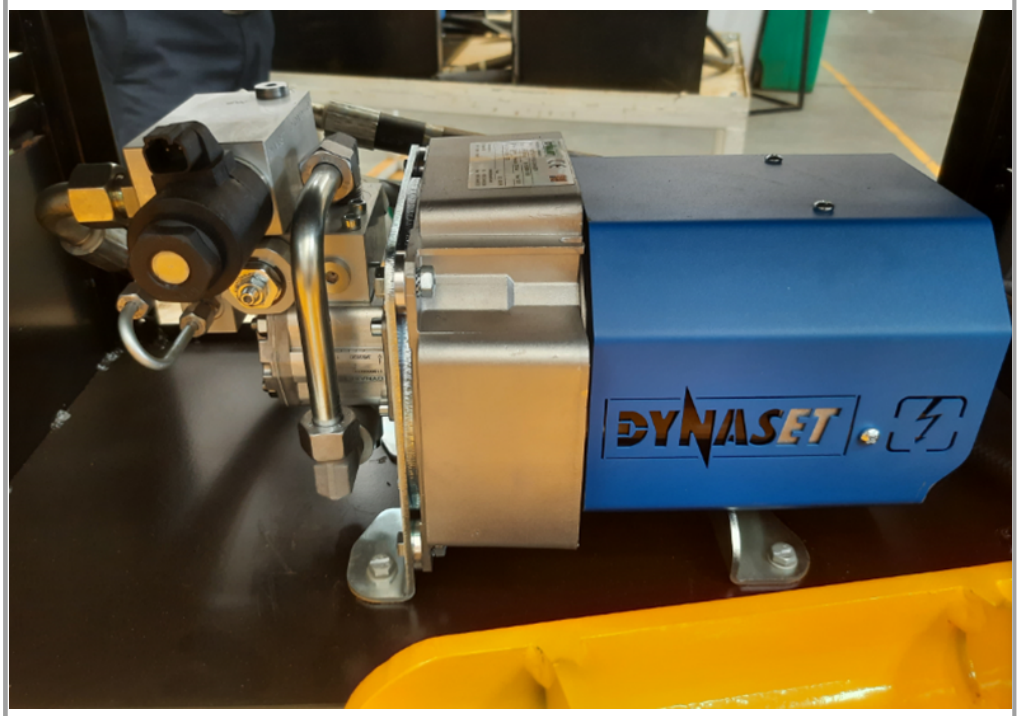

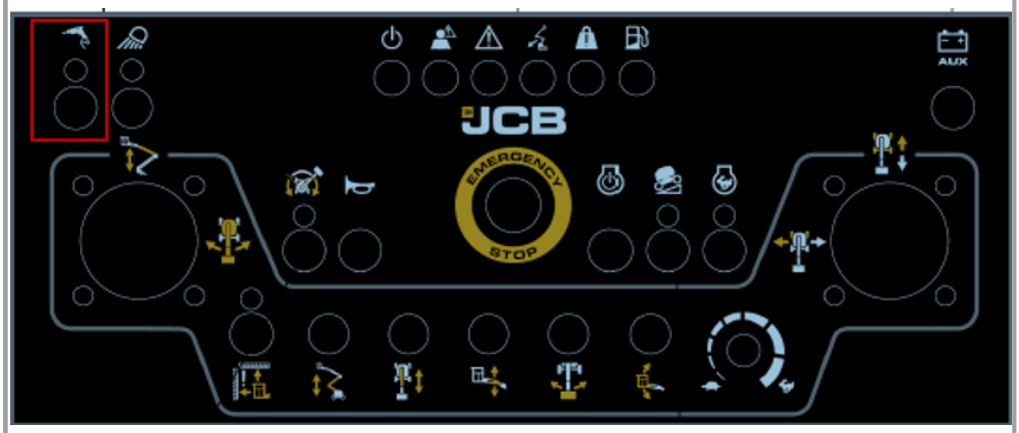

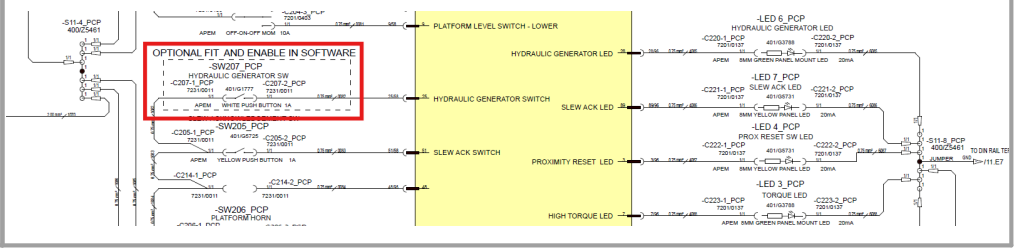

5.1.193 B1221-17

Error code:	B1221-17

© 2026 JCB INDIA LTD

ECU	Base ECU
Description:	Overload - Overload Sensor 1 Out of Range (High).
Component:	Overload Sensor 1
Vehicle reaction:	Detect failure mode; Implement Overload alarm and switch on Fault LED
Possible Cause:	1. Load sensor is not calibrated 2. Load sensor is faulty 3. Short Circuit to High 4. Water ingress
Service Action:	1. Perform weight sensor calibration from display screen. 2. Check condition of weight sensor and connectors, replace if faulty 3. Check condition of wiring from Weight Sensor. Check Interconnects -C05_PH and -C05_PH. Check connections to DIN Rail terminal -S11-6 (Wires #6070 and #6072). Check inputs to Platform Bosch ECU on pins 69/96 through to 70/96. Check platform connector -C22_PH terminals W/21 and X/21. Check for bent or backed out terminals or debris within connectors. Check wiring for any breaks, abrasions or pinching. Observe for any obvious fault or damamge on wiring harness. Perform continuity checks if neccesary and check resistance to +12V and +10V on -C22_PH terminals W/21 and X/21, checking for shorts to High. 4. Check all connectors for water ingress.

© 2026 JCB INDIA LTD







Load Cell Troubleshooting Flow Chart

© 2026 JCB INDIA LTD

5.1.194 B1222-16

Error code:	B1222-16
ECU	Base ECU
Description:	Overload - Overload Sensor 1 Out of Range (Low) or Open Circuit.
Component:	Overload Sensor 1
Vehicle reaction:	Detect failure mode; Implement Overload alarm and switch on Fault LED NOTE:- The Fault code in case of Open Circuit is detected only when fault is detected on both pins(68,69)of load sensor 1
Possible Cause:	1. Load sensor is not calibrated 2. Connectors not fully inserted. 3. Load sensor is faulty 4. Short Circuit to Low 5. Water ingress
Service Action:	1. Perform weight sensor calibration from display screen. 2. Check condition of weight sensor and connectors -C05_PH and -C06_PH, Ensure connectors are fully inserted. Check platform connector -C22_PH. Check for backed out terminals. 3. Replace weight sensor if faulty 4. Check wiring for any breaks, abrasions or pinching. Observe for any obvious fault or damamge on wiring harness. Perform continuity checks if neccesary and check resistance to GND on -C22_PH terminals W/21 and X/21, checking for shorts to Low. 5. Check all connectors for water ingress.

© 2026 JCB INDIA LTD







Load Cell Troubleshooting Flow Chart

© 2026 JCB INDIA LTD

5.1.195 B1223-17

Error code:	B1223-17
ECU	Base ECU
Description:	Overload - Overload Sensor 2 Out of Range (High).
Component:	Overload Sensor 2
Vehicle reaction:	Detect failure mode; Implement Overload alarm and switch on Fault LED
Possible Cause:	1. Load sensor is not calibrated 2. Load sensor is faulty 3. Short Circuit to High 4. Water ingress
Service Action:	1. Perform weight sensor calibration from display screen. 2. Check condition of weight sensor and connectors, replace if faulty 3. Check condition of wiring from Weight Sensor. Check Interconnects -C06_PH and -C06_PH. Check connections to DIN Rail terminal -S11-6 (Wires #6070 and #6072). Check inputs to Platform Bosch ECU on pins 69/96 through to 70/96. Check platform connector -C22_PH terminals W/21 and X/21. Check for bent or backed out terminals or debris within connectors. Check wiring for any breaks, abrasions or pinching. Observe for any obvious fault or damamge on wiring harness. Perform continuity checks if neccesary and check resistance to +12V and +10V on -C22_PH terminals W/21 and X/21, checking for shorts to High. 4. Check all connectors for water ingress.

© 2026 JCB INDIA LTD







Load Cell Troubleshooting Flow Chart

© 2026 JCB INDIA LTD

5.1.196 B1224-16

Error code:	B1224-16
ECU	Base ECU
Description:	Overload - Overload Sensor 2 Out of Range (Low) or Open Circuit.
Component:	Overload Sensor 2
Vehicle reaction:	Detect failure mode; Implement Overload alarm and switch on Fault LED NOTE:- The Fault code in case of Open Circuit is detected only when fault is detected on both pins(70,71)of load sensor 2.
Possible Cause:	1. Load sensor is not calibrated 2. Connectors not fully inserted. 3. Load sensor is faulty 4. Short Circuit to Low 5. Water ingress
Service Action:	1. Perform weight sensor calibration from display screen. 2. Check condition of weight sensor and connectors -C05_PH and -C06_PH, Ensure connectors are fully inserted. Check platform connector -C22_PH. Check for backed out terminals. 3. Replace weight sensor if faulty 4. Check wiring for any breaks, abrasions or pinching. Observe for any obvious fault or damamge on wiring harness. Perform continuity checks if neccesary and check resistance to GND on -C22_PH terminals W/21 and X/21, checking for shorts to Low. 5. Check all connectors for water ingress.

© 2026 JCB INDIA LTD







Load Cell Troubleshooting Flow Chart

© 2026 JCB INDIA LTD

5.1.197 B1225-2F

Error code:	B1225-2F
ECU	Base ECU
Description:	Overload - Overload Sensor Data Erratic (Difference >20%).
Component:	Overload Sensor(s)
Vehicle reaction:	Detect failure mode; Implement Overload alarm and switch on Fault LED
Possible Cause:	1. Load sensor is not calibrated 2. Load sensor is not secured correctly 3. Wiring fault to load sensor 4. Water ingress
Service Action:	1. Sensor & Bracket Inspection • Verify mounting of sensor and bracket is secure. • Check for physical damage to: ○ Sensor ○ Platform basket • Ensure no debris around the sensor or bracket. **2.** Wiring & Electrical Checks • Inspect wiring to sensor for: ○ Breaks, Abrasions, Pinching • Look for obvious faults or damage on the wiring harness. • Check inputs to Platform Bosch ECU: ○ Terminals 68/96 through 71/96, Note Load Sensor 2 signals are opposite to Load Sensor 1 • Inspect platform connector -C22_PH: ○ Terminals: T/21, V/21, W/21, X/21 • Check weight sensor connectors: ○ -C04_PH and -C05_PH for damage

© 2026 JCB INDIA LTD

- Ensure all connectors are fully inserted.
- Verify DIN rail terminal -S11-6:
  - Wiring inserted correctly
- Check FU07_TCP fuse condition.

3. Water Ingress

- Inspect all connectors for signs of water ingress.

4. Calibration

- Perform weight sensor calibration via the display screen.

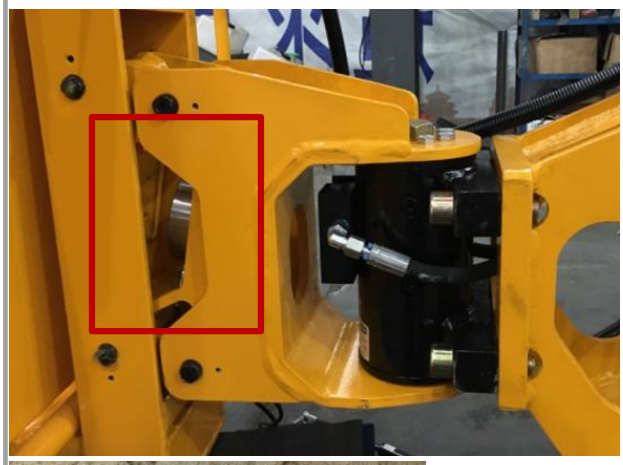



© 2026 JCB INDIA LTD

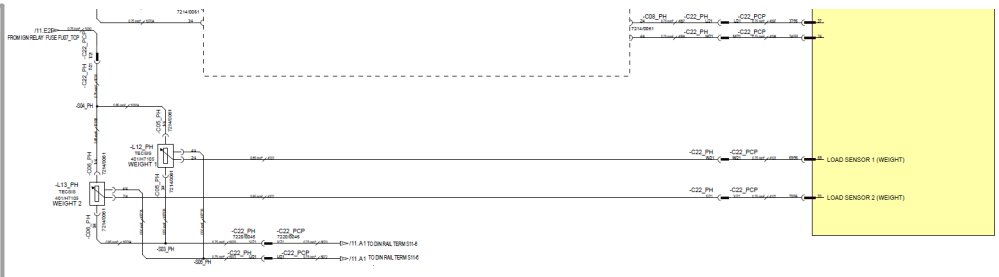

Load Cell Troubleshooting Flow Chart

5.1.198 B1227-17

Error code:	B1227-17
ECU	Base ECU
Description:	Oscillating Axle - Axle Lock Pressure Sensor Short Circuit to High.
Component:	Oscillating Axle Pressure Sensor
Vehicle reaction:	Detect failure mode; Prevent all Raise, Extend and Slew; In Raised or Slew position - prevent drive & steer; In Stowed and Forward position - allow drive
Possible Cause:	1. A short circuit within the wiring harness

© 2026 JCB INDIA LTD

	2. A short circuit within the harness connectors 3. Water damage/ingress within the harness connectors 4. Damaged component
Service Action:	1. Output voltage of pressure sensor is 0.5 - 4.5VDC. Disconnect interconnect connectors -C214_TH and -C214_TH. Measure voltage at pin 4/4 (Wire #4012) on both connectors. If one of the measurements is above 4.5VDC then there is a short to high on that connection. Trace the fault back to where there is a short circuit to high. 2. Check interconnects -C214_TH and -C214_TH for any damage, shorts, debris or stray wire. Check the Base Bosch ECU connector (58-way) for any damage, bent pins debris etc. Check pin 27/58. 3. Check all above connectors for any water ingress. 4. Check the pressure sensor for damage or malfunction. Replace component.  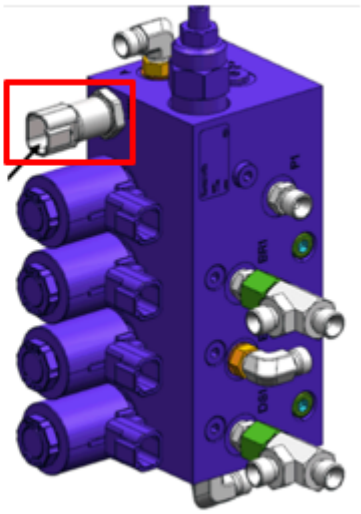 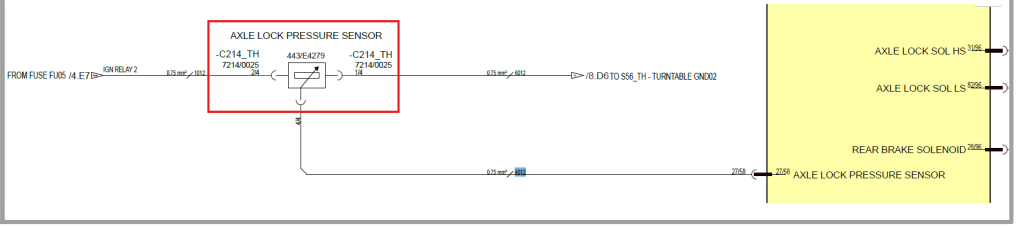

© 2026 JCB INDIA LTD

5.1.199 B1228-16

Error code:	B1228-16
ECU	Base ECU
Description:	Oscillating Axle - Axle Lock Pressure Sensor Short Circuit to Low or Open Circuit.
Component:	Oscillating Axle Pressure Sensor
Vehicle reaction:	Detect failure mode; Prevent all Raise, Extend and Slew; In Raised or Slew position - prevent drive & steer; In Stowed and Forward position - allow drive
Possible Cause:	1. A short circuit within the wiring harness 2. A short circuit within the harness connectors 3. Water damage/ingress within the harness connectors 4. Damaged component
Service Action:	1. Output voltage of pressure sensor is 0.5 - 4.5VDC. Disconnect interconnect connectors -C214_TH and -C214_TH. Measure voltage at pin 4/4 (Wire #4012) on both connectors. If one of the measurements is below 0.5VDC then there is a short to low on that connection. Trace the fault back to where there is a short circuit to Low. Check for abrasions or pinching on the wire harness. 2. Check interconnects -C214_TH and -C214_TH for any damage, shorts, debris or stray wire. Check the Base Bosch ECU connector (58-way) for any damage, bent pins debris etc. Check pin 27/58. 3. Check all above connectors for any water ingress. 4. Check the pressure sensor for damage or malfunction. Replace component.

© 2026 JCB INDIA LTD

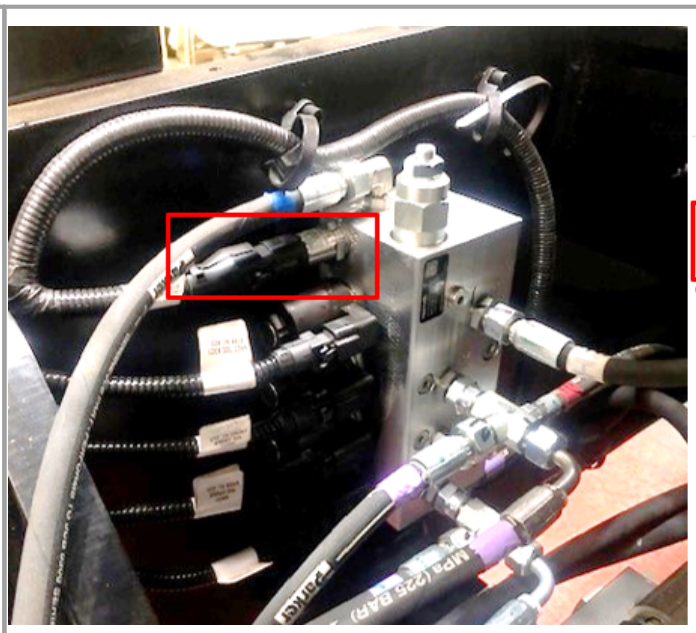

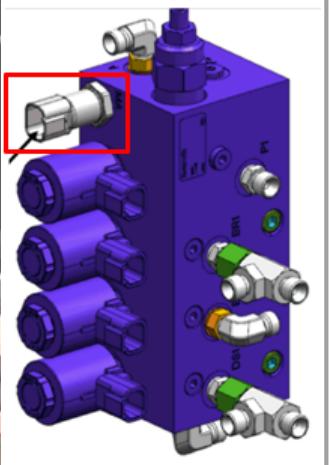

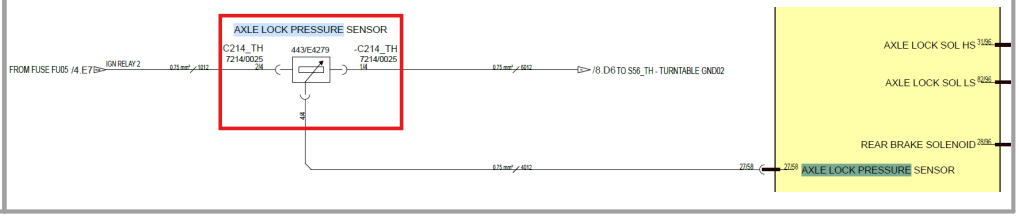

5.1.200 B1232-17

Error code:	B1232-17
ECU	Base ECU
Description:	Fuel Sender - Fuel Sender out of Range (High).
Component:	Fuel Sender
Vehicle reaction:	Detect failure mode; Resistance reads more than 183 ohms
Possible Cause:	1. Open Circuit 2. Faulty Component
Service Action:	1. Resistance reads above 183 Ohms to GND. Check for open Circuit between Fuel Level Sensor connector -C28_TH Pin 1/2 and Base Bosch ECU pin 21/96.

© 2026 JCB INDIA LTD

	2. Check resistance across Fuel Level Sender, replace if value reads above 183 Ohms. 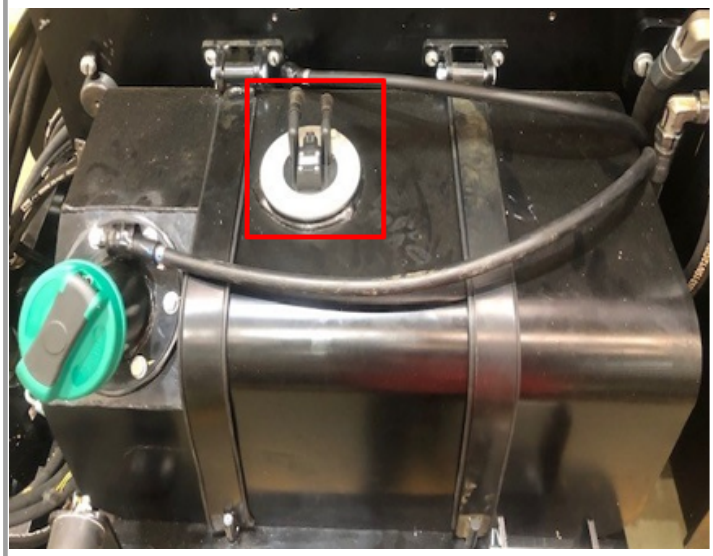 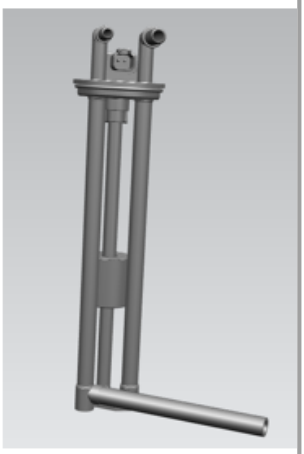 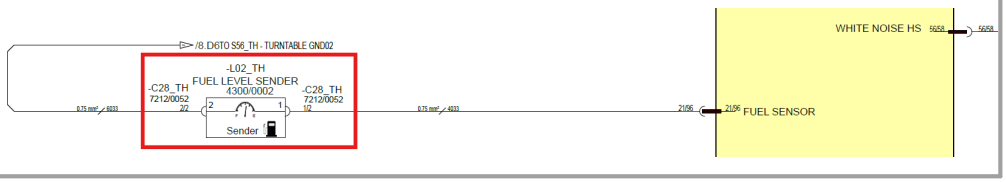

5.1.201 **B1233-16**

Error code:	**B1233-16**
ECU	Base ECU
Description :	Fuel Sender - Fuel Sender out of Range (Low).
Component :	Fuel Sender
Vehicle reaction:	Detect failure mode; Resistance reads less than 5 ohms
Possible Cause:	1. Short Circuit 2. Faulty Component
Service Action:	1. Resistance reads below 5 Ohms to GND. Check for Short Circuit between Fuel Level Sensor connector -C28_TH Pin 1/2 (Wire #4033) and GND. 2. Check resistance across Fuel Level Sender, replace if value reads below 0 Ohms.

© 2026 JCB INDIA LTD

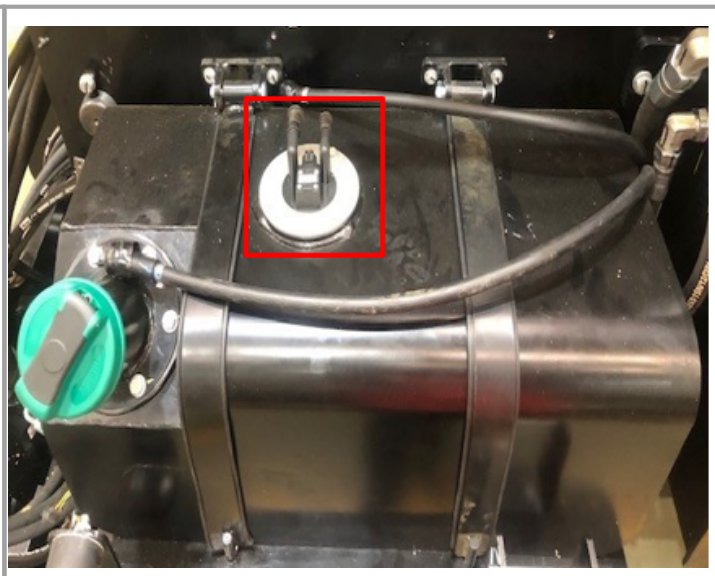

5.1.202 B1235-17

Error code:	B1235-17
ECU	Platform ECU
Description:	E-Stop & Base Override - E-Stop & Base Override - E-Stop Plausibility Check
Component:	E-Stop(s)
Vehicle reaction:	1. Disable all outputs except CAN (Emergency stop pressed) 2. Default to E-Stop pressed condition
Possible Cause:	1. A short circuit within the wiring harness 2. A poor connection or damaged terminal within the connector(s) 3. A damaged or broken wire within the wiring harness 4. Component is damaged
Service Action:	1. Check no short in wiring harness between E-STOP SWITCH +VE to GND or E-STOP -VE to GND on Base E-Stop terminals.

© 2026 JCB INDIA LTD

	2. Check terminals for damage at E-stop terminals, and on Base Bosch ECU Connector (-C27-XC1_PCP, Pin 14/96 and -C27-XC2PCP, Pin 28/58). 3. Check Continuity of wire #3043A-#3043 and #6048 between Bosch Base ECU and E-Stop terminals. 4. Check operation of E-Stop switch to ensure correct switching. Contacts should be normally closed during normal operation (Unpressed) and Open contacts when switch is pressed. Switch terminal attached to wire #3043 should be 12V (unpressed) and 0V (pressed). Switch terminal attached to wire #6048 should be 0V (GND) (Unpressed) and open circuit to GND when pressed. IF fault found, check operation of switch with multimeter, checking the closed and open conditions.   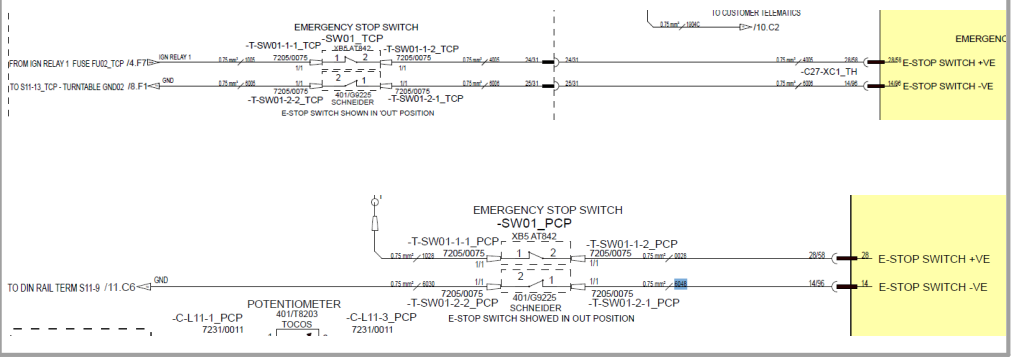

5.1.203 B1236-2F

Error code:	B1236-2F
ECU	Base ECU
Description:	Oscillating Axle - Axle Lock Pressure Sensor Failure.

© 2026 JCB INDIA LTD

Component:	Oscillating Axle Pressure Sensor
Vehicle reaction:	Detect failure mode; Prevent all Raise, Extend and Slew; In Raised or Slew position - prevent drive & steer; In Stowed and Forward position - allow drive
Possible Cause:	1. A short circuit within the wiring harness 2. A short circuit within the harness connectors 3. Water damage/ingress within the harness connectors 4. Damaged component
Service Action:	1. Output voltage of pressure sensor is 0.5 - 4.5VDC. Disconnect interconnect connectors -C214_TH and -C214_TH. Measure voltage at pin 4/4 (Wire #4012) on both connectors. If one of the measurements is above 4.5VDC then there is a short to high on that connection. Trace the fault back to where there is a short circuit to high. 2. Check interconnects -C214_TH and -C214_TH for any damage, shorts, debris or stray wire. Check the Base Bosch ECU connector (58-way) for any damage, bent pins debris etc. Check pin 27/58. 3. Check all above connectors for any water ingress. 4. Check the pressure sensor for damage or malfunction. Replace component.

© 2026 JCB INDIA LTD

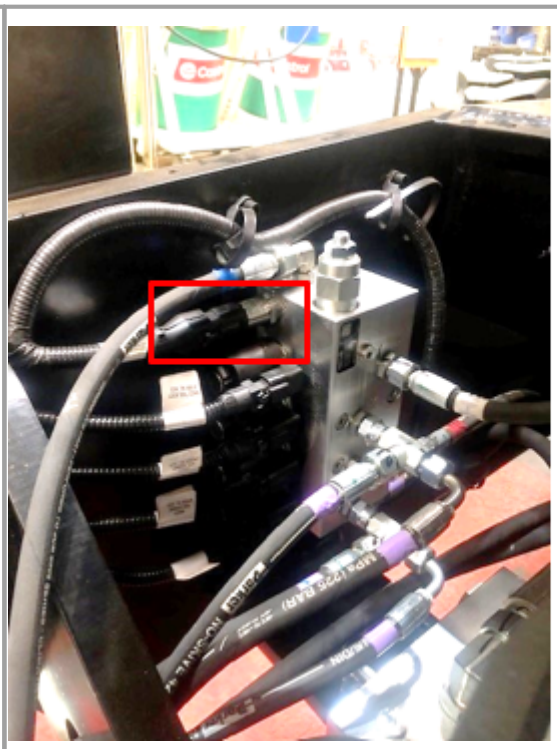

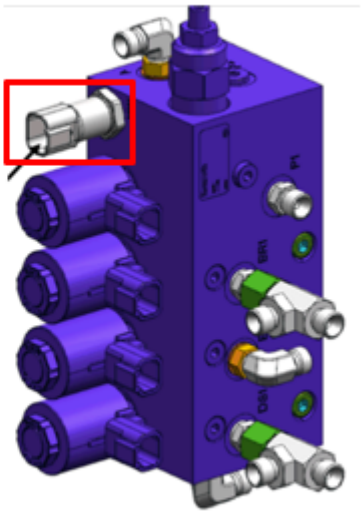

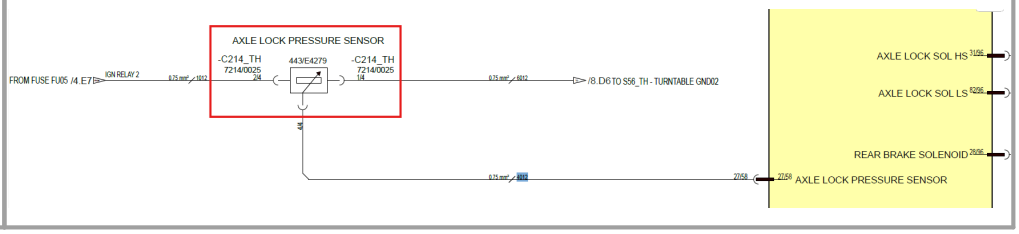

5.1.204 B1238-2F

Error code:	B1238-2F
ECU	Base ECU
Description:	Oscillating Axle - Axle Lock Pressure Sensor Output is less than 1v when it should be greater than 1v.
Component:	Oscillating Axle Pressure Sensor
Vehicle reaction:	Detect failure mode; Prevent all Raise, Extend and Slew; In Raised or Slew position - prevent drive & steer; In Stowed and Forward position - allow drive
Possible Cause:	1. A short circuit within the wiring harness 2. A short circuit within the harness connectors

© 2026 JCB INDIA LTD

	3. Water damage/ingress within the harness connectors 4. Damaged component
Service Action:	1. Output voltage of pressure sensor is 0.5 - 4.5VDC. Disconnect interconnect connectors -C214_TH and -C214_TH. Measure voltage at pin 4/4 (Wire #4012) on both connectors. If one of the measurements is above 4.5VDC then there is a short to high on that connection. Trace the fault back to where there is a short circuit to high. 2. Check interconnects -C214_TH and -C214_TH for any damage, shorts, debris or stray wire. Check the Base Bosch ECU connector (58-way) for any damage, bent pins debris etc. Check pin 27/58. 3. Check all above connectors for any water ingress. 4. Check the pressure sensor for damage or malfunction. Replace component.  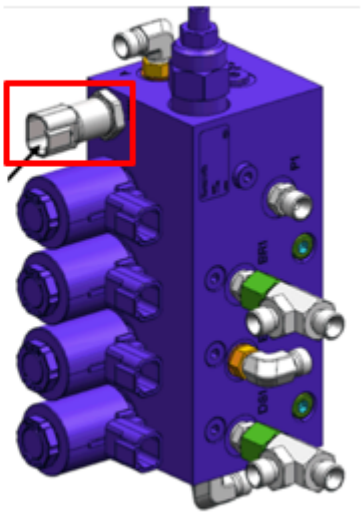 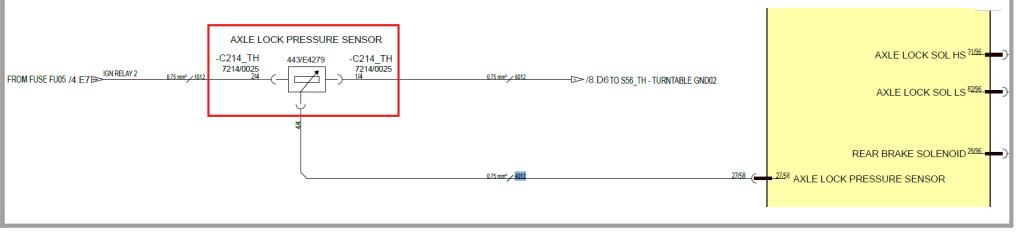

© 2026 JCB INDIA LTD

5.1.205 B1239-17

Error code:	B1239-17
ECU	Platform ECU
Description:	Engine Start/Stop - Platform Engine Start/Stop Button Short Circuit to High.
Component:	Engine Start/Stop Button
Vehicle reaction:	Detect failure mode; Ignore input (switch off engine)
Possible Cause:	1. A short circuit within the wiring harness 2. A short circuit within the harness connectors 3. Water damage/ingress within the harness connectors 4. Damaged component
Service Action:	1. Disconnect connector -C212-2_PCP from the rear of the Engine Start/Stop Button on the Platform Control Panel. Measure voltage at terminal. If voltage is high >12V, check wire #0086 to Platform Bosch ECU pin 50/58. 2. Check condition of pins in Platform Bosch ECU. Check for Bent pins, debris or stray wires causing a short. 3. Check for water ingress in the Platform Bosch ECU Connectors. 4. Check Switch for damage or any loose wiring in the control panel.  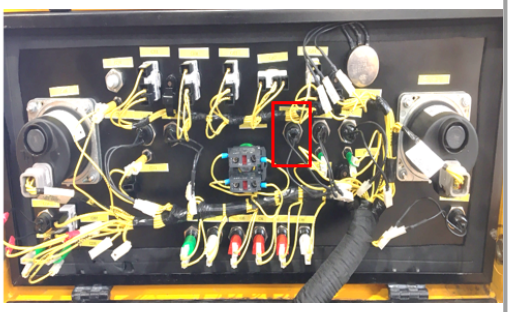 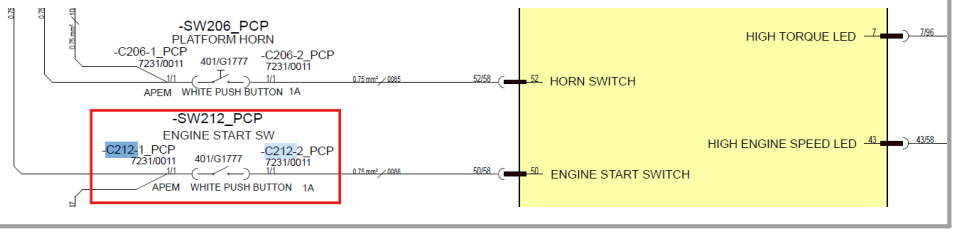

© 2026 JCB INDIA LTD

5.1.206 B1240-16

Error code:	B1240-16
ECU	Platform ECU
Description:	Engine Start/Stop - Platform Engine Start/Stop Button Short Circuit to Low.
Component:	Engine Start/Stop Button
Vehicle reaction:	Detect failure mode; Ignore input (switch off engine)
Possible Cause:	1. A short circuit within the wiring harness 2. A short circuit to the chassis 3. A short circuit within the harness connectors 4. Water damage/ingress within the harness connectors 5. Damaged component
Service Action:	1. Disconnect connector -C212-2_PCP from the rear of the Engine Start/Stop Button on the Platform Control Panel. Measure resistance from Terminal to GND. If a short exists, check wire #0086 to Platform Bosch ECU pin 50/58. 2. Check Wire #0086 is not shorted to GND / Chassis. Check for abrasions and pinching. 3. Check condition of pins in Platform Bosch ECU. Check for Bent pins, debris or stray wires causing a short. 4. Check for water ingress in the Platform Bosch ECU Connectors. 5. Check Switch for damage or shorting to connector -C212-2_PCP.

© 2026 JCB INDIA LTD

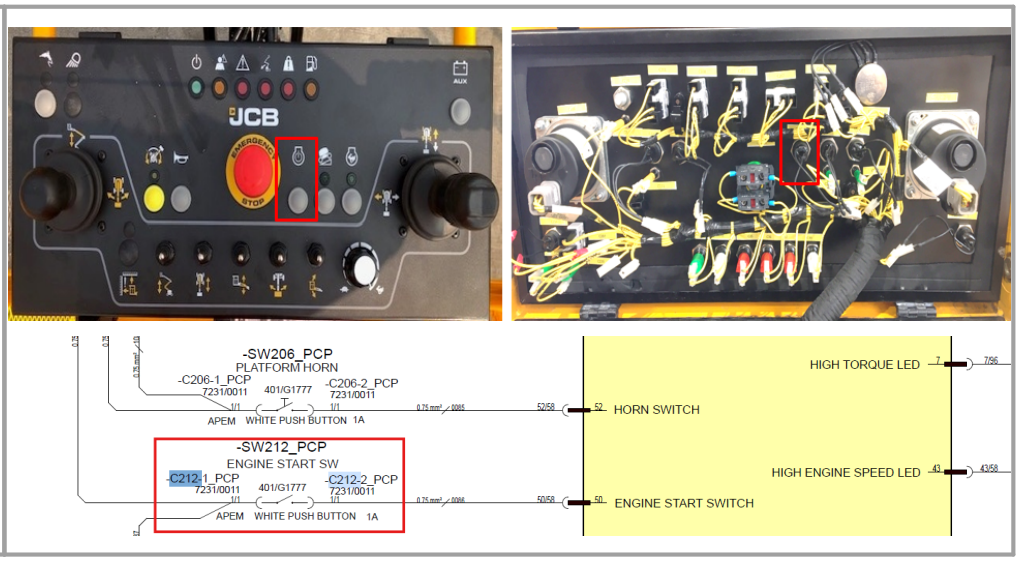

5.1.207 B1241-24

Error code:	B1241-24
ECU	Platform ECU
Description:	Engine Start/Stop - Platform Engine Start/Stop Button Stuck for >10s.
Component:	Engine Start/Stop Button
Vehicle reaction:	Detect failure mode; Ignore input (switch off engine)
Possible Cause:	1. A short circuit within the wiring harness 2. A short circuit within the harness connectors 3. Water damage/ingress within the harness connectors 4. Damaged component
Service Action:	1. Disconnect connector -C212-2_PCP from the rear of the Engine Start/Stop Button on the Platform Control Panel. Measure voltage at terminal. If voltage is high >12V, check wire #0086 to Platform Bosch ECU pin 50/58. 2. Check condition of pins in Platform Bosch ECU. Check for Bent pins, debris or stray wires causing a short. 3. Check for water ingress in the Platform Bosch ECU Connectors.

© 2026 JCB INDIA LTD

	4. Check operation of the system. Check for physical damage to the Engine Start/Stop Button, connectors and other harness components.   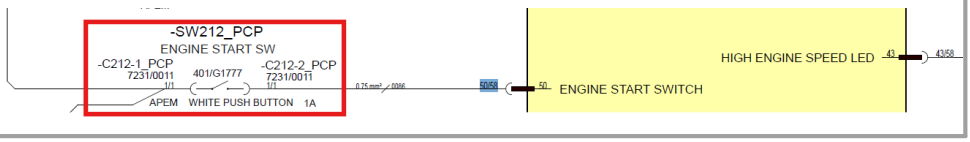

5.1.208 B1242-17

Error code:	B1242-17
ECU	Platform ECU
Description:	Platform Level - Platform Level Switch Raise Short Circuit to High.
Component:	Platform Level Switch
Vehicle reaction:	Before operation: Ignore the input (but not output as it can be operated from where there is no fault) After operation: Refer to 10V System Short Circuit Fault reaction
Possible Cause:	1. A short circuit within the wiring harness 2. A short circuit within the harness connectors 3. Water damage/ingress within the harness connectors 4. Damaged component
Service Action:	1. Disconnect connector -C204-1_PCP from the rear of the Platform Level Switch on the Platform Control Panel. Measure voltage at terminal. If voltage is high >12V, check wire #0080 to Platform Bosch ECU pin 10/58.

© 2026 JCB INDIA LTD

	2. Check condition of pins in Platform Bosch ECU. Check for Bent pins, debris or stray wires causing a short. 3. Check for water ingress in the Platform Bosch ECU Connectors. 4. Check Switch for damage or any loose wiring in the control panel.  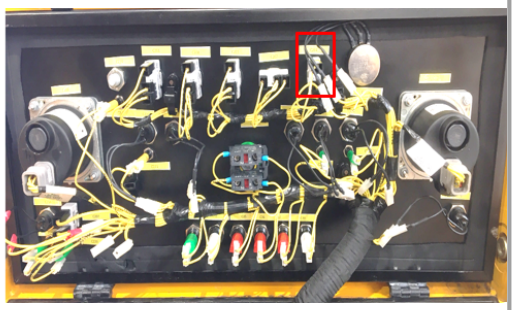 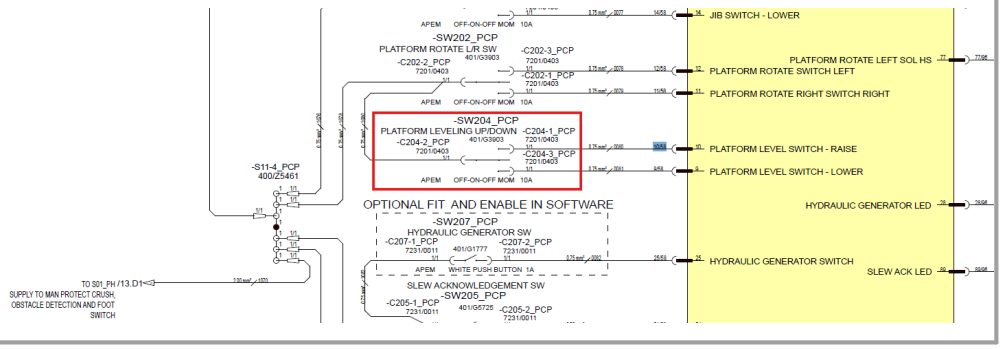

5.1.209 B1243-17

Error code:	**B1243-17**
ECU	Platform ECU
Description:	Platform Level - Platform Level Switch Lower Short Circuit to High.
Component:	Platform Level Switch
Vehicle reaction:	Before operation: Ignore the input (but not output as it can be operated from where there is no fault) After operation: Refer to 10V System Short Circuit Fault reaction
Possible Cause:	1. A short circuit within the wiring harness 2. A short circuit within the harness connectors 3. Water damage/ingress within the harness connectors 4. Damaged component

© 2026 JCB INDIA LTD

Service Action:	1. Disconnect connector -C204-3_PCP from the rear of the Platform Level Switch on the Platform Control Panel. Measure voltage at terminal. If voltage is high >12V, check wire #0081 to Platform Bosch ECU pin 9/58. 2. Check condition of pins in Platform Bosch ECU. Check for Bent pins, debris or stray wires causing a short. 3. Check for water ingress in the Platform Bosch ECU Connectors. 4. Check Switch for damage or any loose wiring in the control panel.  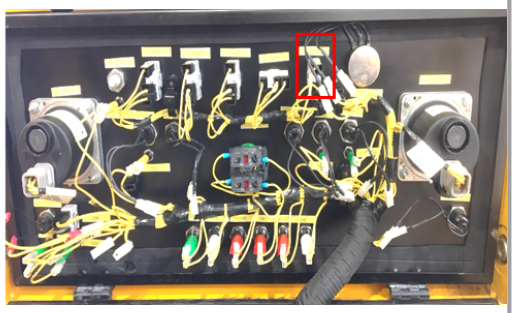 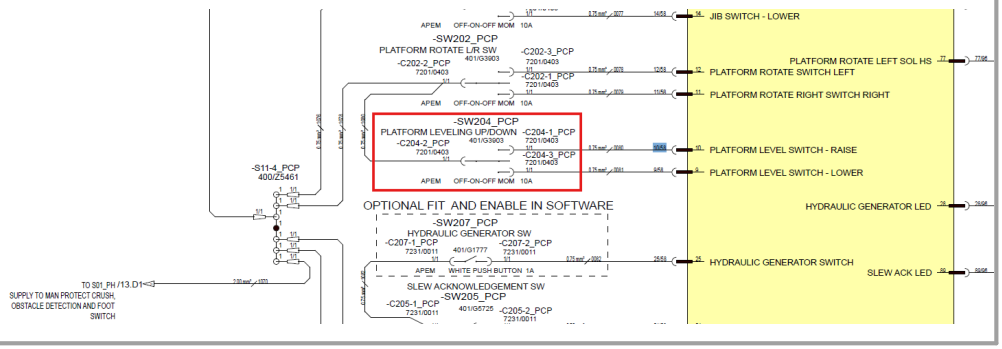

5.1.210 B1244-92

Error code:	**B1244-92**
ECU	Platform ECU
Description:	Platform Level - Platform Level Switch Raise & Lower Both Activated (5-10v).
Component:	Platform Level Switch
Vehicle reaction:	Ignore the input (but not output as it can be operated from where there is no fault)
Possible Cause:	1. A short circuit within the wiring harness 2. A short circuit within the harness connectors 3. Water damage/ingress within the harness connectors

© 2026 JCB INDIA LTD

	4. Damaged component
Service Action:	1. Disconnect connector -C204-1_PCP and -C204-3_PCP from the rear of the Platform Level Switch on the Platform Control Panel. Measure voltage at both terminals. If voltage is high >12V, check wires #0080 & #0081 to Platform Bosch ECU pin 10/58 & pin 9/58. 2. Check condition of pins in Platform Bosch ECU. Check for Bent pins, debris or stray wires causing a short. 3. Check for water ingress in the Platform Bosch ECU Connectors. 4. Check Switch for damage or any loose wiring in the control panel.  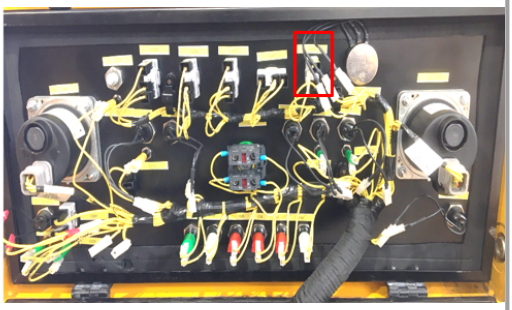 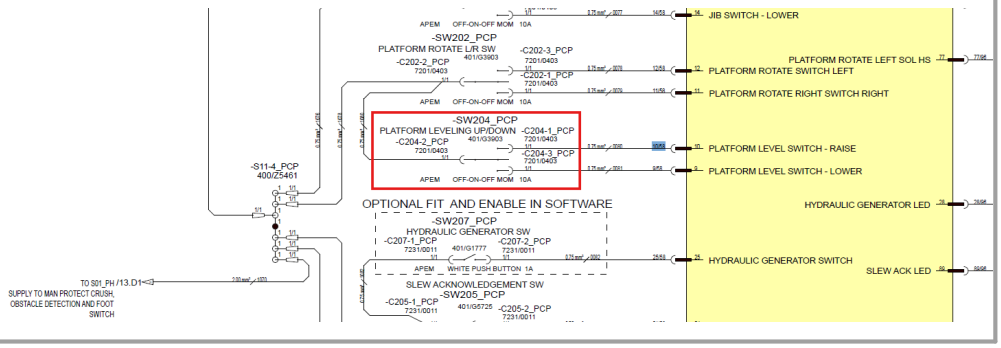

5.1.211 B1245-16

Error code:	**B1245-16**
ECU	Platform ECU
Description:	Platform Level - Platform Level Switch Raise Short Circuit to Low.
Component:	Platform Level Switch
Vehicle reaction:	Before operation: Ignore the input (but not output as it can be operated from where there is no fault) After operation: Refer to 10V System Short Circuit Fault reaction

© 2026 JCB INDIA LTD

Possible Cause:	1. A short circuit within the wiring harness 2. A short circuit to the chassis 3. A short circuit within the harness connectors 4. Water damage/ingress within the harness connectors 5. Damaged component
Service Action:	1. Disconnect connector -C204-1_PCP from the rear of the Platform Level Switch on the Platform Control Panel. Measure resistance from Terminal to GND. If a short exists, check wire #0080 to Platform Bosch ECU pin 10/58. 2. Check Wire #0080 is not shorted to GND / Chassis. Check for abrasions and pinching. 3. Check condition of pins in Platform Bosch ECU. Check for Bent pins, debris or stray wires causing a short. 4. Check for water ingress in the Platform Bosch ECU Connectors. 5. Check Switch for damage or shorting to connector -C204-1_PCP  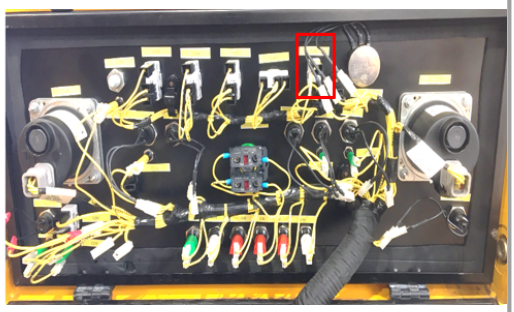 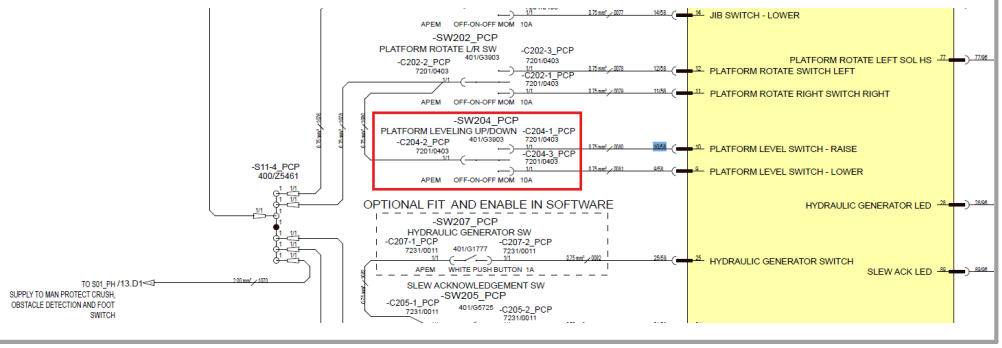

5.1.212 B1246-16

Error code:	**B1246-16**
ECU	Platform ECU
Description:	Platform Level - Platform Level Switch Lower Short Circuit to Low.

© 2026 JCB INDIA LTD

Component :	Platform Level Switch
Vehicle reaction:	Before operation: Ignore the input (but not output as it can be operated from where there is no fault) After operation: Refer to 10V System Short Circuit Fault reaction
Possible Cause:	1. A short circuit within the wiring harness 2. A short circuit to the chassis 3. A short circuit within the harness connectors 4. Water damage/ingress within the harness connectors 5. Damaged component
Service Action:	1. Disconnect connector -C204-3_PCP from the rear of the Platform Level Switch on the Platform Control Panel. Measure resistance from Terminal to GND. If a short exists, check wire #0081 to Platform Bosch ECU pin 9/58. 2. Check Wire #0081 is not shorted to GND / Chassis. Check for abrasions and pinching. 3. Check condition of pins in Platform Bosch ECU. Check for Bent pins, debris or stray wires causing a short. 4. Check for water ingress in the Platform Bosch ECU Connectors. 5. Check Switch for damage or shorting to connector -C204-3_PCP  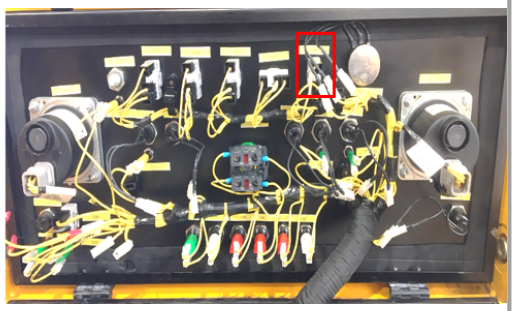 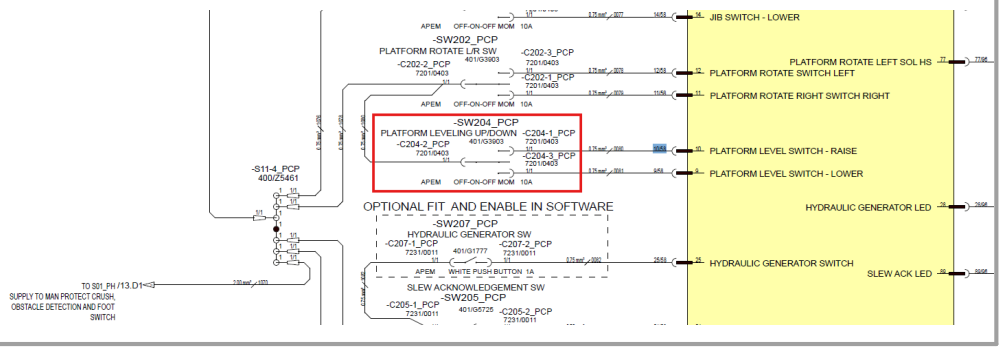

© 2026 JCB INDIA LTD

5.1.213 B1247-17

Error code:	B1247-17
ECU	Platform ECU
Description:	ARTICULATED BOOM RAISE Switch Short Circuit to High
Component:	ARTICULATED BOOM RAISE Switch
Vehicle reaction:	Input from Platform control station will be disabled, output can still be operated from platform control station.
Possible Cause:	1. A short circuit within the wiring harness 2. A short circuit to the chassis 3. A short circuit within the harness connectors 4. Water damage/ingress within the harness connectors 5. Damaged component
Service Action:	1. Disconnect connector -C201-2_PCP from the rear of the ARTICULATED BOOM RAISE Switch on the Base Control Panel. Measure resistance from Terminal to GND. If a short exists, check wire #0073 to Base Bosch ECU pin 34/58. 2. Check Wire #0073 is not shorted to GND / Chassis. Check for abrasions and pinching. 3. Check condition of pins in Platform Bosch ECU. Check for Bent pins, debris or stray wires causing a short. 4. Check for water ingress in the Platform Bosch ECU Connectors. 5. Check Switch for damage or shorting to connector -C201-1_PCP 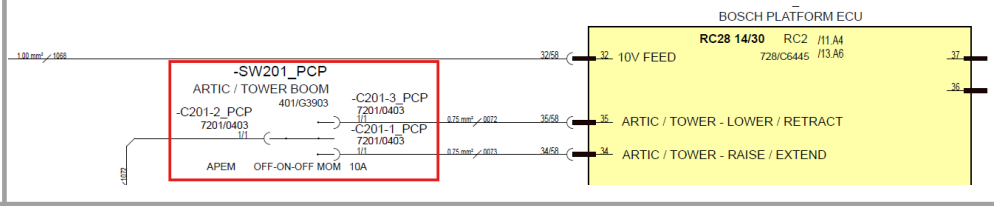

© 2026 JCB INDIA LTD

5.1.214 B1248-17

Error code:	B1248-17
ECU	Platform ECU
Description:	ARTICULATED BOOM RAISE & LOWER Switches both activated (5 - 10V)
Component:	ARTICULATED BOOM RAISE & LOWER
Vehicle reaction:	Input from Platform control station will be disabled, output can still be operated from platform control station.
Possible Cause:	1. A short circuit within the wiring harness 2. A short circuit to the chassis 3. A short circuit within the harness connectors 4. Water damage/ingress within the harness connectors 5. Damaged component
Service Action:	1. Disconnect connector -C201-2_PCP from the rear of the ARTICULATED BOOM RAISE Switch on the Base Control Panel. Measure resistance from Terminal to GND. If a short exists, check wire #0073 & #0072 to Base Bosch ECU pin 34/58 & 35/58. 2. Check Wire #0073 & #0072 is not shorted to GND / Chassis. Check for abrasions and pinching. 3. Check condition of pins in Platform Bosch ECU. Check for Bent pins, debris or stray wires causing a short. 4. Check for water ingress in the Platform Bosch ECU Connectors. 5. Check Switch for damage or shorting to connector -C201-1_PCP & -C201-3_PCP 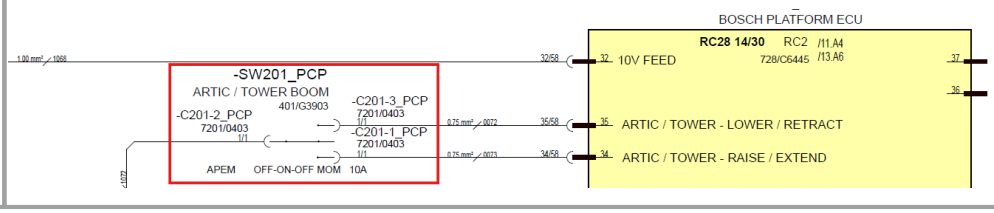

© 2026 JCB INDIA LTD

5.1.215 B1249-92

Error code:	B1249-92
ECU	Platform ECU
Description:	ARTICULATED BOOM RAISE & LOWER Switches both activated (5 - 10V)
Component:	ARTICULATED BOOM RAISE & LOWER
Vehicle reaction:	Input from Platform control station will be disabled, output can still be operated from platform control station.
Possible Cause:	1. A short circuit within the wiring harness 2. A short circuit to the chassis 3. A short circuit within the harness connectors 4. Water damage/ingress within the harness connectors 5. Damaged component
Service Action:	1. Disconnect connector -C201-2_PCP from the rear of the ARTICULATED BOOM RAISE Switch on the Base Control Panel. Measure resistance from Terminal to GND. If a short exists, check wire #0073 & #0072 to Base Bosch ECU pin 34/58 & 35/58. 2. Check Wire #0073 & #0072 is not shorted to GND / Chassis. Check for abrasions and pinching. 3. Check condition of pins in Platform Bosch ECU. Check for Bent pins, debris or stray wires causing a short. 4. Check for water ingress in the Platform Bosch ECU Connectors. 5. Check Switch for damage or shorting to connector -C201-1_PCP & -C201-3_PCP 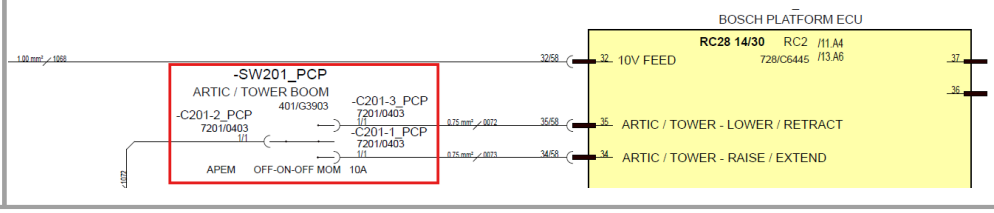

© 2026 JCB INDIA LTD

5.1.216 B1250-16

Error code:	B1250-16
ECU	Platform ECU
Description:	ARTICULATED BOOM RAISE Switch Short Circuit to Low
Component:	ARTICULATED BOOM RAISE Switch
Vehicle reaction:	Before operation: Ignore the input (but not output as it can be operated from where there is no fault) After operation: Refer to 10V System Short Circuit Fault reaction
Possible Cause:	1. A short circuit within the wiring harness 2. A short circuit to the chassis 3. A short circuit within the harness connectors 4. Water damage/ingress within the harness connectors 5. Damaged component
Service Action:	1. Disconnect connector -C201-2_PCP from the rear of the ARTICULATED BOOM RAISE Switch on the Platform Control Panel. Measure resistance from Terminal to GND. If a short exists, check wire #0073 to Platform Bosch ECU pin 34/58. 2. Check Wire #0073 is not shorted to GND / Chassis. Check for abrasions and pinching. 3. Check condition of pins in Platform Bosch ECU. Check for Bent pins, debris or stray wires causing a short. 4. Check for water ingress in the Platform Bosch ECU Connectors. 5. Check Switch for damage or shorting to connector -C201-1_PCP 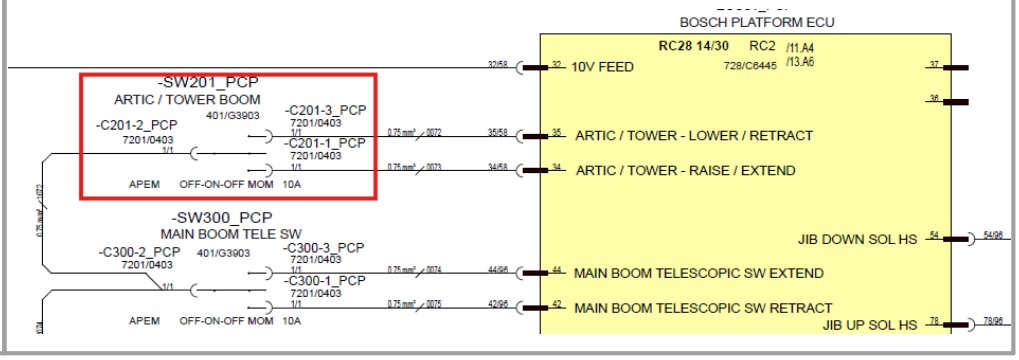

© 2026 JCB INDIA LTD

5.1.217 B1251-16

Error code:	B1251-16
ECU	Platform ECU
Description:	ARTICULATED BOOM LOWER Switch Short Circuit to Low
Component:	ARTICULATED BOOM LOWER Switch
Vehicle reaction:	Before operation: Ignore the input (but not output as it can be operated from where there is no fault) After operation: Refer to 10V System Short Circuit Fault reaction
Possible Cause:	1. A short circuit within the wiring harness 2. A short circuit to the chassis 3. A short circuit within the harness connectors 4. Water damage/ingress within the harness connectors 5. Damaged component
Service Action:	1. Disconnect connector -C201-2_PCP from the rear of the ARTICULATED BOOM LOWER Switch on the Platform Control Panel. Measure resistance from Terminal to GND. If a short exists, check wire #0072 to Platform Bosch ECU pin 35/58. 2. Check Wire #0072 is not shorted to GND / Chassis. Check for abrasions and pinching. 3. Check condition of pins in Platform Bosch ECU. Check for Bent pins, debris or stray wires causing a short. 4. Check for water ingress in the Platform Bosch ECU Connectors. 5. Check Switch for damage or shorting to connector -C201-3_PCP 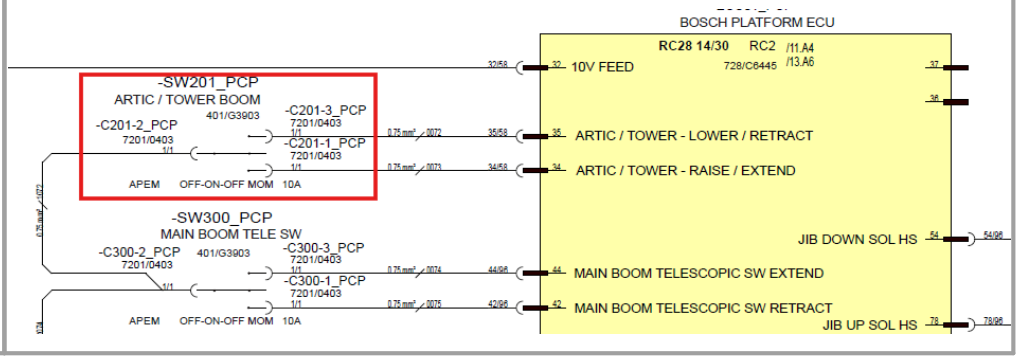

© 2026 JCB INDIA LTD

5.1.218 B1252-17

Error code:	B1252-17
ECU	Platform ECU
Description:	MAIN BOOM TELESCOPE EXTEND Switch SC to High.
Component:	MAIN BOOM TELESCOPE EXTEND
Vehicle reaction:	Before operation: Ignore the input (but not output as it can be operated from where there is no fault) After operation: Refer to 10V System Short Circuit Fault reaction
Possible Cause:	1. A short circuit within the wiring harness 2. A short circuit within the harness connectors 3. Water damage/ingress within the harness connectors 4. Damaged component
Service Action:	1. Disconnect connector -C300-3_PCP from the rear of the Main Boom Telescopic Switch on the Platform Control Panel. Measure voltage at terminal. If voltage is high >12V, check wire #0074 to Platform Bosch ECU pin 44/96. 2. Check condition of pins in Platform Bosch ECU. Check for Bent pins, debris or stray wires causing a short. 3. Check for water ingress in the Platform Bosch ECU Connectors. 4. Check Switch for damage or any loose wiring in the control panel.  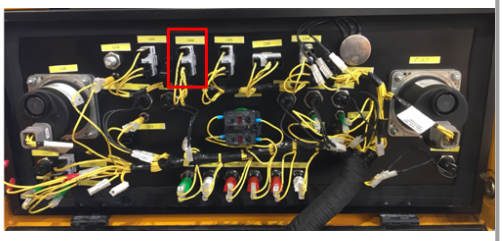 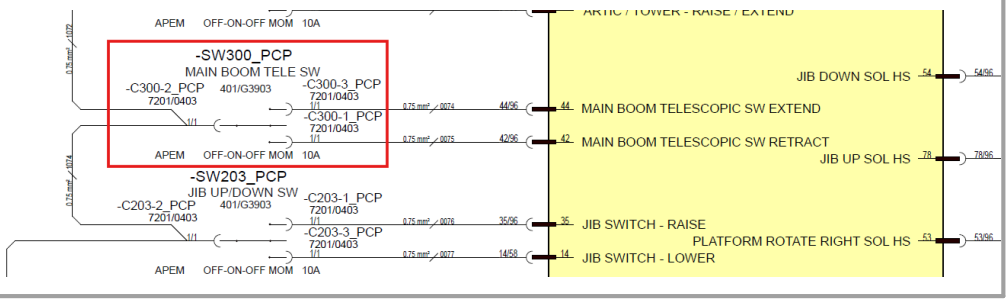

© 2026 JCB INDIA LTD

5.1.219 B1253-17

Error code:	B1253-17
ECU	Platform ECU
Description:	MAIN BOOM TELESCOPE RETRACT Switch SC to High.
Component:	MAIN BOOM TELESCOPE RETRACT Switch
Vehicle reaction:	Before operation: Ignore the input (but not output as it can be operated from where there is no fault) After operation: Refer to 10V System Short Circuit Fault reaction
Possible Cause:	1. A short circuit within the wiring harness 2. A short circuit within the harness connectors 3. Water damage/ingress within the harness connectors 4. Damaged component
Service Action:	1. Disconnect connector -C300-1_PCP from the rear of the Main Boom Telescopic Switch on the Platform Control Panel. Measure voltage at terminal. If voltage is high >12V, check wire #0075 to Platform Bosch ECU pin 42/96. 2. Check condition of pins in Platform Bosch ECU. Check for Bent pins, debris or stray wires causing a short. 3. Check for water ingress in the Platform Bosch ECU Connectors. 4. Check Switch for damage or any loose wiring in the control panel.  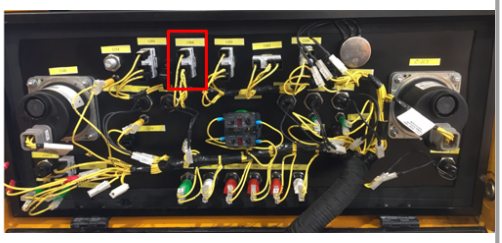 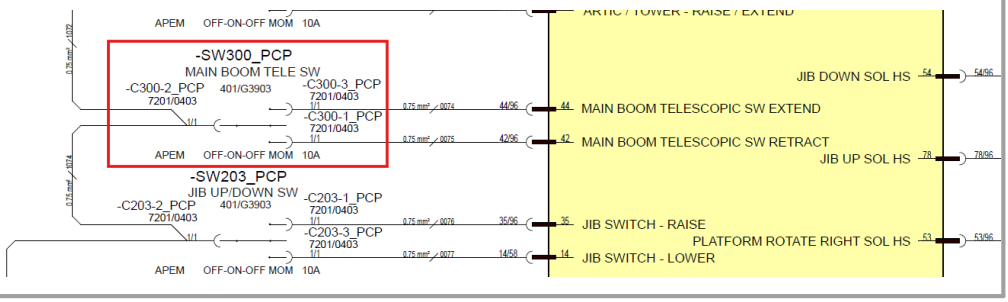 </td></tr></table>

© 2026 JCB INDIA LTD

5.1.220 **B1254-92**

Error code:	**B1254-92**
ECU	Platform ECU
Description:	MAIN BOOM TELESCOPE EXTEND & RETRACT Switches both activated (5 - 10V).
Component:	MAIN BOOM TELESCOPE EXTEND & RETRACT Switches
Vehicle reaction:	Ignore the input (but not output as it can be operated from where there is no fault)
Possible Cause:	1. A short circuit within the wiring harness 2. A short circuit within the harness connectors 3. Water damage/ingress within the harness connectors 4. Damaged component
Service Action:	1. Disconnect connector -C300-3_PCP and -C300-1_PCP from the rear of the Platform Rotate Switch on the Platform Control Panel. Measure voltage at both terminals. If voltage is high >12V, check wires #0074 & #0075 to Platform Bosch ECU pin 44/96 & pin 42/96. 2. Check condition of pins in Platform Bosch ECU. Check for Bent pins, debris or stray wires causing a short. 3. Check for water ingress in the Platform Bosch ECU Connectors. 4. Check Switch for damage or any loose wiring in the control panel.  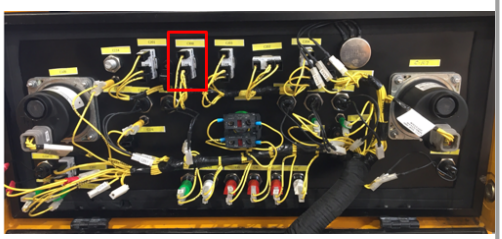

© 2026 JCB INDIA LTD

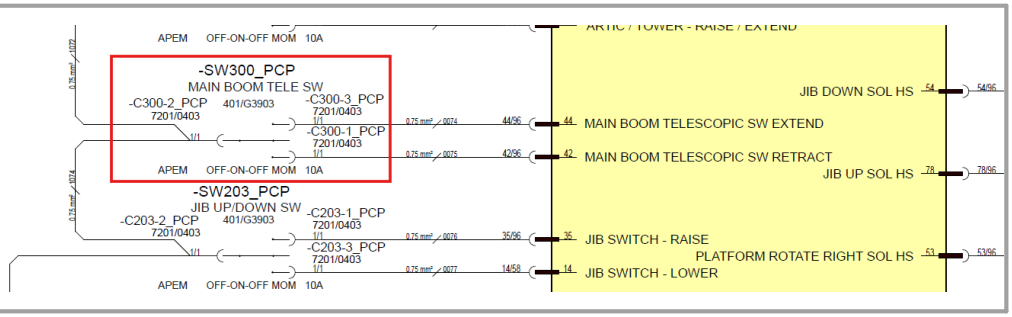

5.1.221 B1255-16

Error code:	B1255-16
ECU	Platform ECU
Description:	MAIN BOOM TELESCOPE EXTEND Switch SC to Low.
Component:	MAIN BOOM TELESCOPE EXTEND
Vehicle reaction:	Before operation: Ignore the input (but not output as it can be operated from where there is no fault) After operation: Refer to 10V System Short Circuit Fault reaction
Possible Cause:	1. A short circuit within the wiring harness 2. A short circuit to the chassis 3. A short circuit within the harness connectors 4. Water damage/ingress within the harness connectors 5. Damaged component
Service Action:	1. Disconnect connector -C300-3_PCP from the rear of the Main Boom Telescopic Switch on the Platform Control Panel. Measure resistance from Terminal to GND. If a short exists, check wire #0074 to Platform Bosch ECU pin 44/96. 2. Check Wire #0074 is not shorted to GND / Chassis. Check for abrasions and pinching. 3. Check condition of pins in Platform Bosch ECU. Check for Bent pins, debris or stray wires causing a short. 4. Check for water ingress in the Platform Bosch ECU Connectors. 5. Check Switch for damage or shorting to connector -C300-2_PCP

© 2026 JCB INDIA LTD



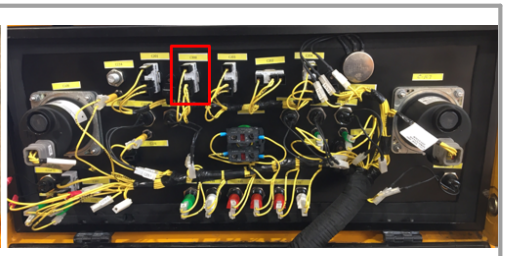

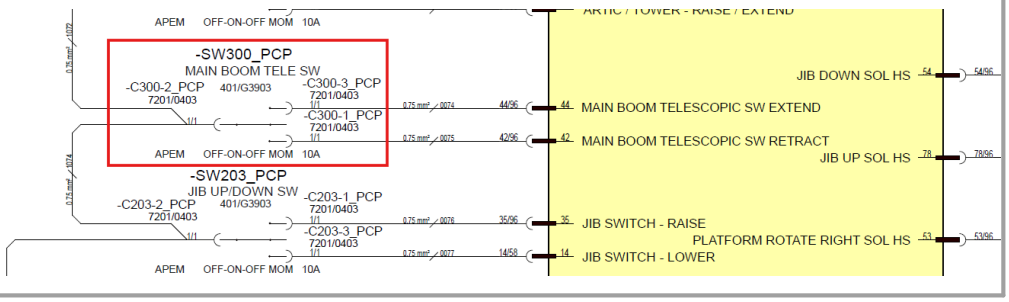

5.1.222 B1256-16

Error code:	B1256-16
ECU	Platform ECU
Description:	MAIN BOOM TELESCOPE RETRACT Switch SC to Low.
Component:	MAIN BOOM TELESCOPE RETRACT Switch
Vehicle reaction:	Before operation: Ignore the input (but not output as it can be operated from where there is no fault) After operation: Refer to 10V System Short Circuit Fault reaction
Possible Cause:	1. A short circuit within the wiring harness 2. A short circuit to the chassis 3. A short circuit within the harness connectors 4. Water damage/ingress within the harness connectors 5. Damaged component
Service Action:	1. Disconnect connector -C300-1_TCP from the rear of the Platform Rotate Switch on the Platform Control Panel. Measure resistance from Terminal to GND. If a short exists, check wire #0075 to Platform Bosch ECU pin 42/96. 2. Check Wire #0075 is not shorted to GND / Chassis. Check for abrasions and pinching.

© 2026 JCB INDIA LTD

	3. Check condition of pins in Platform Bosch ECU. Check for Bent pins, debris or stray wires causing a short. 4. Check for water ingress in the Platform Bosch ECU Connectors. 5. Check Switch for damage or shorting to connector -C300-1_PCP  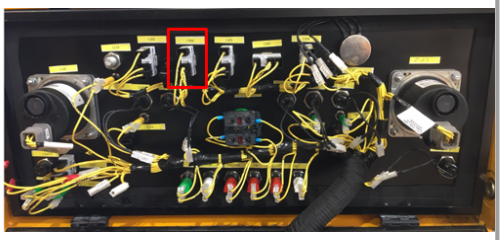 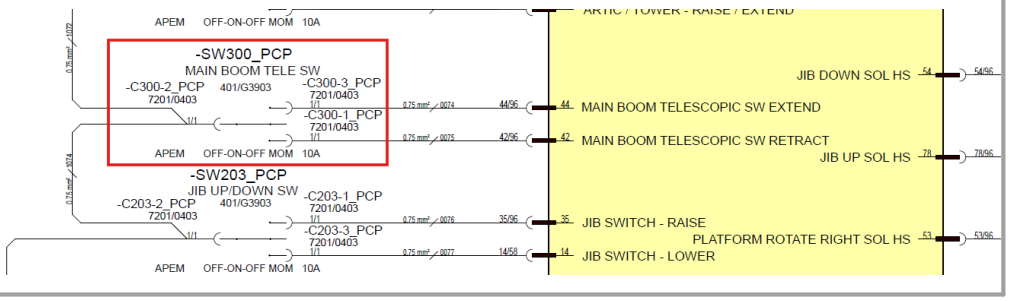

5.1.223 B1257-17

Error code:	B1257-17
ECU	Platform ECU
Description:	Platform Rotate Switch Right Short Circuit to High.
Component:	Platform Rotate Switch
Vehicle reaction:	Before operation: Ignore the input (but not output as it can be operated from where there is no fault) After operation: Refer to 10V System Short Circuit Fault reaction
Possible Cause:	1. A short circuit within the wiring harness 2. A short circuit within the harness connectors 3. Water damage/ingress within the harness connectors 4. Damaged component
Service Action:	1. Disconnect connector -C202-1_PCP from the rear of the Platform Rotate Switch on the Platform Control Panel. Measure voltage at terminal. If voltage

© 2026 JCB INDIA LTD

	is high >12V, check wire #0079 to Platform Bosch ECU pin 11/58. 2. Check condition of pins in Platform Bosch ECU. Check for Bent pins, debris or stray wires causing a short. 3. Check for water ingress in the Platform Bosch ECU Connectors. 4. Check Switch for damage or any loose wiring in the control panel.  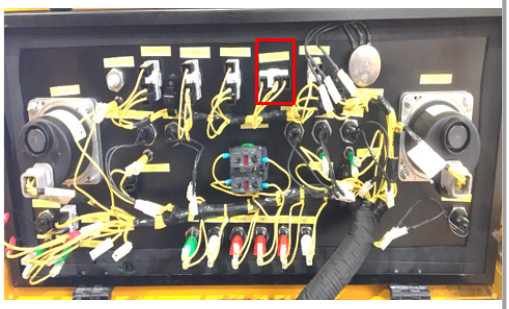 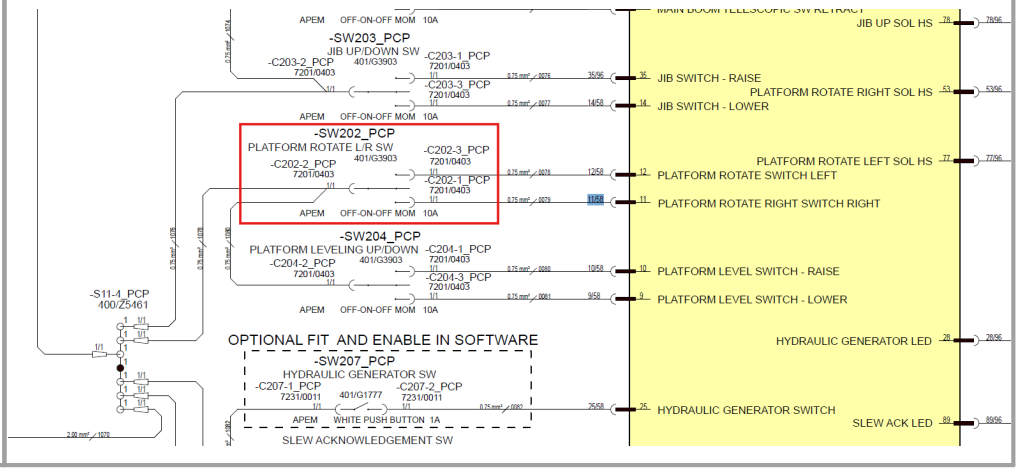

5.1.224 B1258-17

Error code:	**B1258-17**
ECU	Platform ECU
Description:	Platform Rotate Switch Left Short Circuit to High.
Component:	Platform Rotate Switch
Vehicle reaction:	Before operation: Ignore the input (but not output as it can be operated from where there is no fault) After operation: Refer to 10V System Short Circuit Fault reaction

© 2026 JCB INDIA LTD

Possible Cause:	1. A short circuit within the wiring harness 2. A short circuit within the harness connectors 3. Water damage/ingress within the harness connectors 4. Damaged component
Service Action:	1. Disconnect connector -C202-1_PCP from the rear of the Platform Rotate Switch on the Platform Control Panel. Measure voltage at terminal. If voltage is high >12V, check wire #0078 to Platform Bosch ECU pin 12/58. 2. Check condition of pins in Platform Bosch ECU. Check for Bent pins, debris or stray wires causing a short. 3. Check for water ingress in the Platform Bosch ECU Connectors. 4. Check Switch for damage or any loose wiring in the control panel.  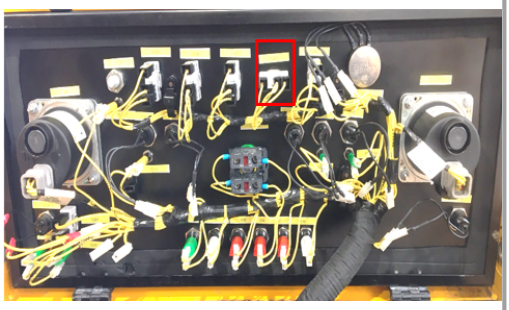 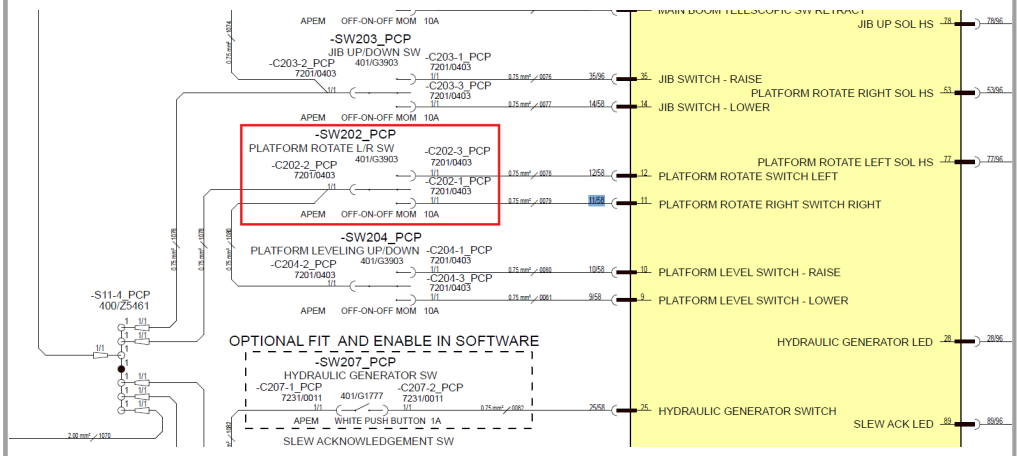

5.1.225 B1259-92

Error code:	**B1259-92**
ECU	Base ECU

© 2026 JCB INDIA LTD

Description:	PLATFORM ROTATE RIGHT & LEFT Switches both activated (5 - 10V)
Component:	PLATFORM ROTATE RIGHT & LEFT Switches
Vehicle reaction:	Ignore the input (but not output as it can be operated from where there is no fault)
Possible Cause:	1. A short circuit within the wiring harness 2. A short circuit within the harness connectors 3. Water damage/ingress within the harness connectors 4. Damaged component
Service Action:	1. Measure voltage at Platform Rotate Left and Right terminals, -C202-1_PCP & -C202-3_PCP. With switch not pressed, terminal voltage should be approx 2.5-3.0V. With switch pressed, voltage should rise to 10V. If Voltage at terminal is constant 10V or higher, then there is a short to high either at the switch, wiring harness or at the Platform Bosch ECU connectors (Pins 11/58 & 12/58). If voltage is high, remove -C202-2_PCP, if voltage now drops, then switch is faulty, else, the fault is at the harness to the Bosch ECU. 2. Check Platform Bosch ECU Connectors for bent pins or stray wires that are potentially causing a short circuit. 3. Check connectors for any sign of water ingress. 4. Check function of switch, check wiring from switch to ECU, checking for abrasions and pinching or any form of damage. 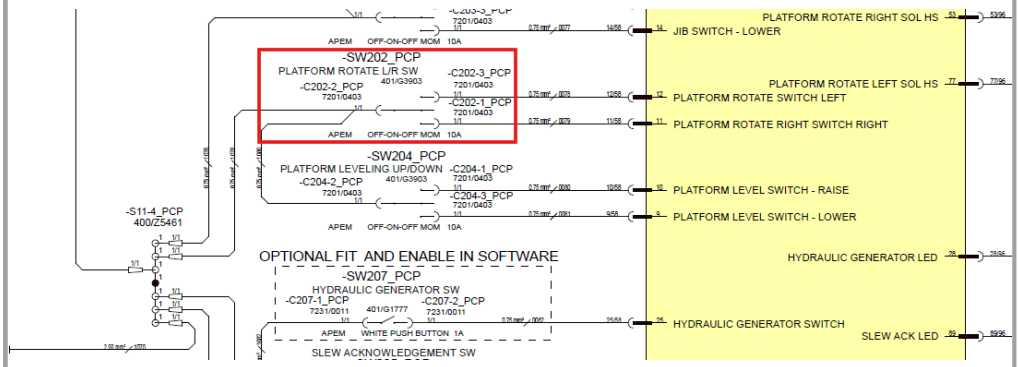

© 2026 JCB INDIA LTD

5.1.226 B1260-16

Error code:	B1260-16
ECU	Platform ECU
Description:	Platform Rotate Switch Right Short Circuit to Low.
Component:	Platform Rotate Switch
Vehicle reaction:	Before operation: Ignore the input (but not output as it can be operated from where there is no fault) After operation: Refer to 10V System Short Circuit Fault reaction
Possible Cause:	1. A short circuit within the wiring harness 2. A short circuit to the chassis 3. A short circuit within the harness connectors 4. Water damage/ingress within the harness connectors 5. Damaged component
Service Action:	1. Disconnect connector -C202-1_PCP from the rear of the Platform Rotate Switch on the Platform Control Panel. Measure resistance from Terminal to GND. If a short exists, check wire #0079 to Platform Bosch ECU pin 11/58. 2. Check Wire #0079 is not shorted to GND / Chassis. Check for abrasions and pinching. 3. Check condition of pins in Platform Bosch ECU. Check for Bent pins, debris or stray wires causing a short. 4. Check for water ingress in the Platform Bosch ECU Connectors. 5. Check Switch for damage or shorting to connector -C202-1_PCP  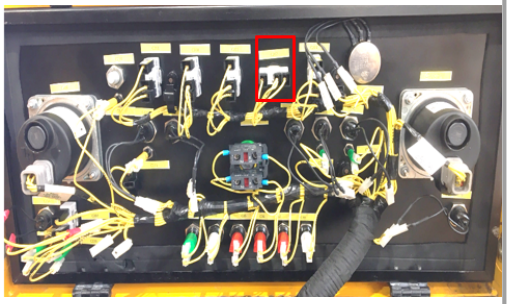

© 2026 JCB INDIA LTD

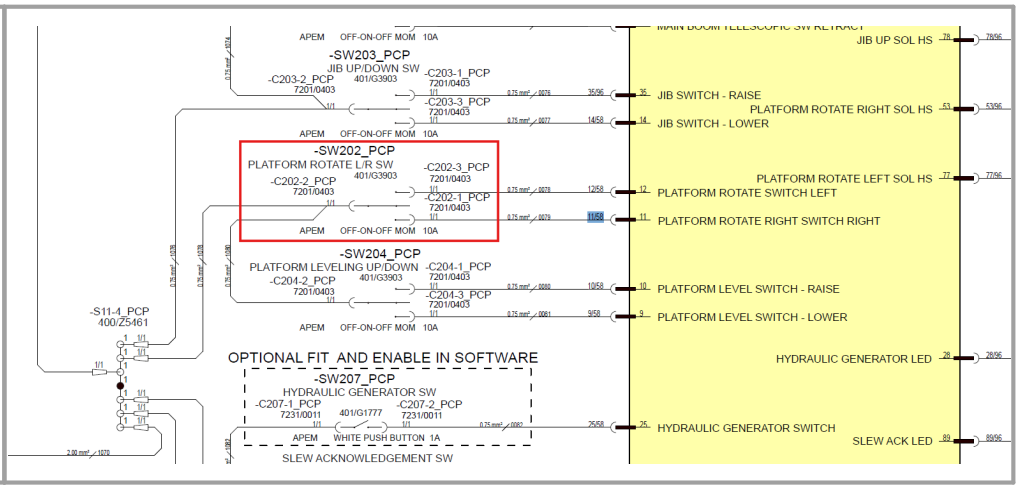

5.1.227 B1261-16

Error code:	B1261-16
ECU	Platform ECU
Description:	Platform Rotate Switch Left Short Circuit to Low.
Component:	Platform Rotate Switch
Vehicle reaction:	Before operation: Ignore the input (but not output as it can be operated from where there is no fault) After operation: Refer to 10V System Short Circuit Fault reaction
Possible Cause:	1. A short circuit within the wiring harness 2. A short circuit to the chassis 3. A short circuit within the harness connectors 4. Water damage/ingress within the harness connectors 5. Damaged component
Service Action:	1. Disconnect connector -C202-1_PCP from the rear of the Platform Rotate Switch on the Platform Control Panel. Measure resistance from Terminal to GND. If a short exists, check wire #0078 to Platform Bosch ECU pin 12/58. 2. Check Wire #0078 is not shorted to GND / Chassis. Check for abrasions and pinching.

© 2026 JCB INDIA LTD

	3. Check condition of pins in Platform Bosch ECU. Check for Bent pins, debris or stray wires causing a short. 4. Check for water ingress in the Platform Bosch ECU Connectors. 5. Check Switch for damage or shorting to connector -C202-1_PCP  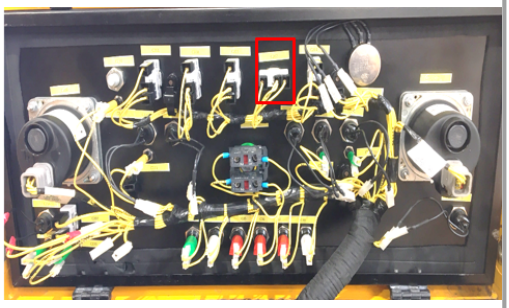 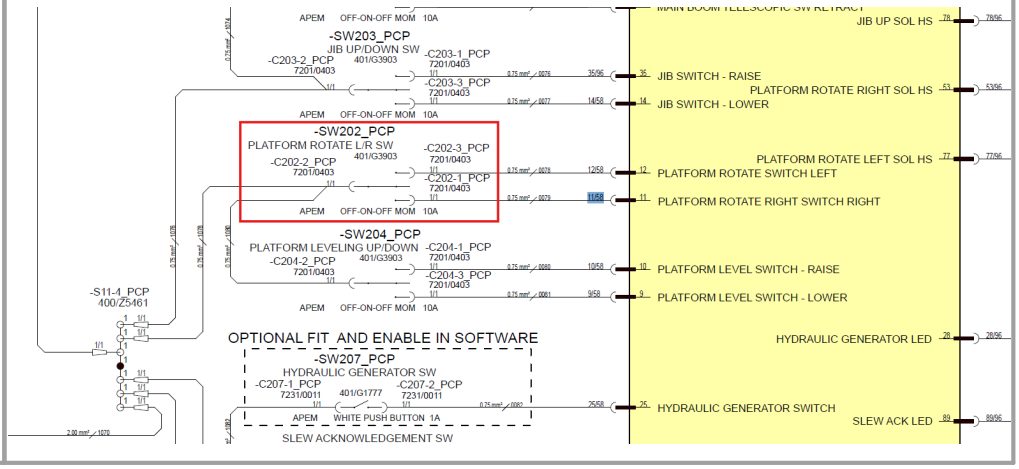

5.1.228 B1262-17

Error code:	B1262-17
ECU	Platform ECU
Description:	Jib - Jib Switch Raise Short Circuit to High.
Component:	Jib Switch
Vehicle reaction:	Before operation: Ignore the input (but not output as it can be operated from where there is no fault) After operation: Refer to 10V System Short Circuit Fault reaction
Possible Cause:	1. A short circuit within the wiring harness 2. A short circuit within the harness connectors

© 2026 JCB INDIA LTD

	3. Water damage/ingress within the harness connectors 4. Damaged component
Service Action:	1. Disconnect connector -C203-1_PCP from the rear of the Jib Switch on the Platform Control Panel. Measure voltage at terminal. If voltage is high >12V, check wire #0076 to Platform Bosch ECU pin 35/96. 2. Check condition of pins in Platform Bosch ECU. Check for Bent pins, debris or stray wires causing a short. 3. Check for water ingress in the Platform Bosch ECU Connectors. 4. Check Switch for damage or any loose wiring in the control panel.  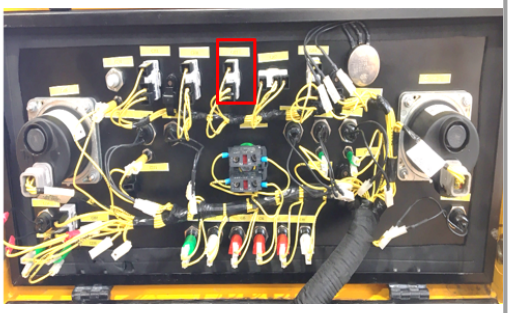 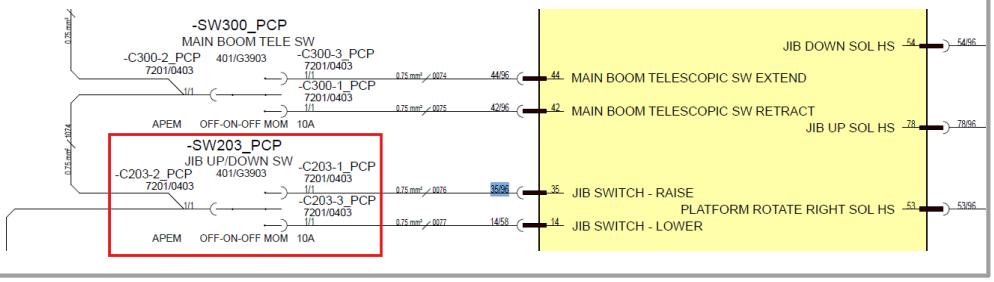

5.1.229 B1263-17

Error code:	**B1263-17**
ECU	Platform ECU
Description:	Jib - Jib Switch Lower Short Circuit to High.
Component:	Jib Switch
Vehicle reaction:	Before operation: Ignore the input (but not output as it can be operated from where there is no fault) After operation: Refer to 10V System Short Circuit Fault reaction

© 2026 JCB INDIA LTD

Possible Cause:	1. A short circuit within the wiring harness 2. A short circuit within the harness connectors 3. Water damage/ingress within the harness connectors 4. Damaged component
Service Action:	1. Disconnect connector -C203-3_PCP from the rear of the Jib Switch on the Platform Control Panel. Measure voltage at terminal. If voltage is high >12V, check wire #0077 to Platform Bosch ECU pin 14/58. 2. Check condition of pins in Platform Bosch ECU. Check for Bent pins, debris or stray wires causing a short. 3. Check for water ingress in the Platform Bosch ECU Connectors. 4. Check Switch for damage or any loose wiring in the control panel.  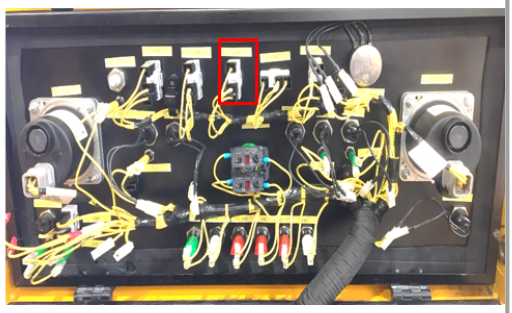 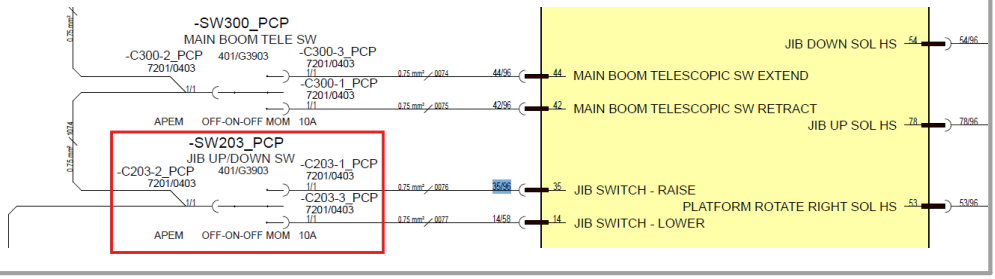

5.1.230 B1264-92

Error code:	**B1264-92**
ECU	Platform ECU
Description:	Jib - Jib Switch Raise & Lower both Activated (5 - 10v).
Component:	Jib Switch
Vehicle reaction:	Ignore the input (but not output as it can be operated from where there is no fault)

© 2026 JCB INDIA LTD

Possible Cause:	1. A short circuit within the wiring harness 2. A short circuit within the harness connectors 3. Water damage/ingress within the harness connectors 4. Damaged component
Service Action:	1. Disconnect connector -C203-1_PCP and -C203-3_PCP from the rear of the Jib Switch on the Platform Control Panel. Measure voltage at both terminals. If voltage is high >12V, check wires #0076 & #0077 to Platform Bosch ECU pin 35/96 & pin 14/58. 2. Check condition of pins in Platform Bosch ECU. Check for Bent pins, debris or stray wires causing a short. 3. Check for water ingress in the Platform Bosch ECU Connectors. 4. Check Switch for damage or any loose wiring in the control panel.  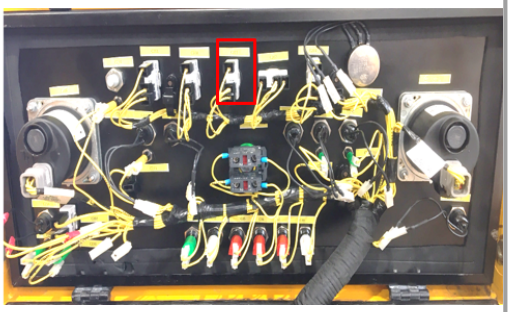 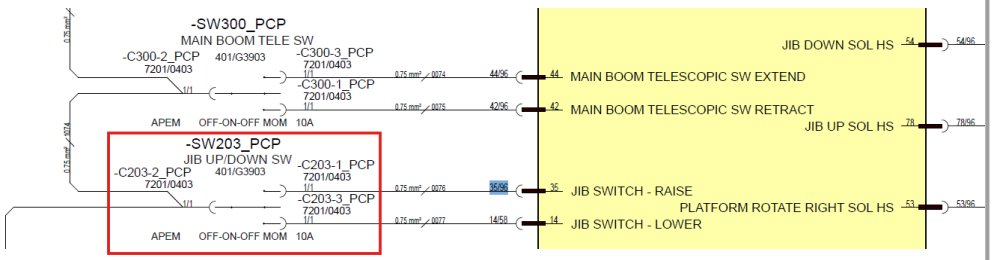

5.1.231 B1265-16

Error code:	**B1265-16**
ECU	Platform ECU
Description:	Jib - Jib Switch Raise Short Circuit to Lower.
Component:	Jib Switch

© 2026 JCB INDIA LTD

Vehicle reaction:	Before operation: Ignore the input (but not output as it can be operated from where there is no fault) After operation: Refer to 10V System Short Circuit Fault reaction
Possible Cause:	1. A short circuit within the wiring harness 2. A short circuit to the chassis 3. A short circuit within the harness connectors 4. Water damage/ingress within the harness connectors 5. Damaged component
Service Action:	1. Disconnect connector -C203-1_PCP from the rear of the Jib Switch on the Platform Control Panel. Measure resistance from Terminal to GND. If a short exists, check wire #0076 to Platform Bosch ECU pin 35/96. 2. Check Wire #0076 is not shorted to GND / Chassis. Check for abrasions and pinching. 3. Check condition of pins in Platform Bosch ECU. Check for Bent pins, debris or stray wires causing a short. 4. Check for water ingress in the Platform Bosch ECU Connectors. 5. Check Switch for damage or shorting to connector -C203-1_PCP  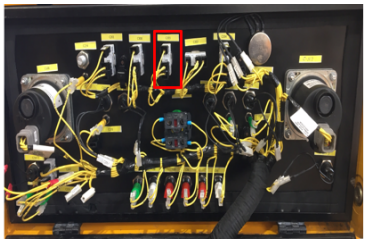  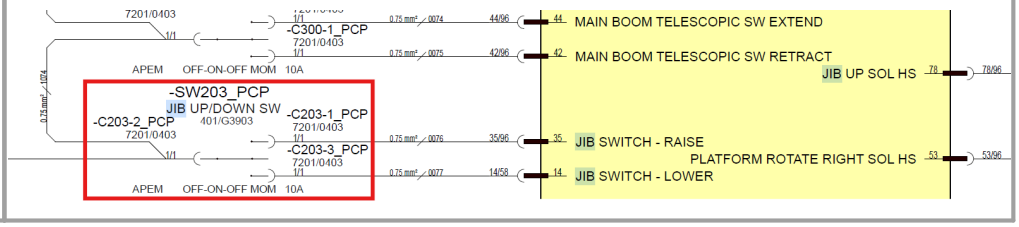

5.1.232 B1266-16

Error code:	**B1266-16**
ECU	Platform ECU
Description:	Jib - Jib Switch Lower Short Circuit to Lower.

© 2026 JCB INDIA LTD

Component :	Jib Switch
Vehicle reaction:	Before operation: Ignore the input (but not output as it can be operated from where there is no fault) After operation: Refer to 10V System Short Circuit Fault reaction
Possible Cause:	1. A short circuit within the wiring harness 2. A short circuit to the chassis 3. A short circuit within the harness connectors 4. Water damage/ingress within the harness connectors 5. Damaged component
Service Action:	1. Disconnect connector -C203-3_PCP from the rear of the Jib Switch on the Platform Control Panel. Measure resistance from Terminal to GND. If a short exists, check wire #0077 to Platform Bosch ECU pin 14/58. 2. Check Wire #0077 is not shorted to GND / Chassis. Check for abrasions and pinching. 3. Check condition of pins in Platform Bosch ECU. Check for Bent pins, debris or stray wires causing a short. 4. Check for water ingress in the Platform Bosch ECU Connectors. 5. Check Switch for damage or shorting to connector -C203-3_PCP  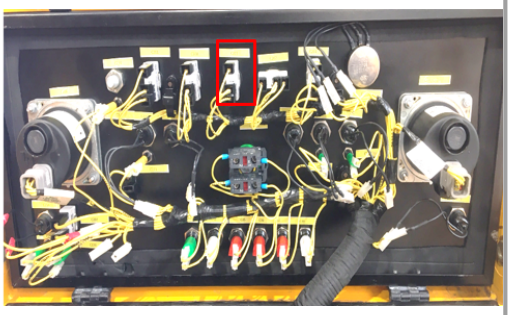 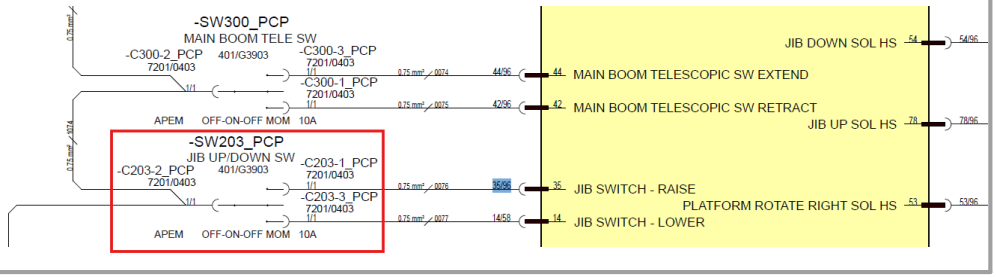

© 2026 JCB INDIA LTD

5.1.233 B1267-17

Error code:	B1267-17
ECU	Platform ECU
Description:	10V FEED System Short Circuit to High - Platform
Component:	Platform ECU
Vehicle reaction:	Block all inputs connected to 10V present on the respective control panel.
Possible Cause:	1. A short circuit within the wiring harness 2. A short circuit within the harness connectors 3. Water damage/ingress within the harness connectors 4. Damaged component
Service Action:	1. At platform control panel, measure voltage at DIN rail terminal -S11-4_PCP (Contains wires: #1068, #1070 #1076, #1078, #1085, #1086). Voltage should be +10VDC. If voltage is >+10VDC then there is likely a short circuit to High. To narrow down fault location, remove each wire one at a time and re-measure voltage until the problem circuit has been identified. Wire #1068 is the +10V Feed from the Platform ECU - If this circuit is >+10V, then the fault my be within the Platform Bosch ECU connector. Check Pin 32/58 and surrounding pins for shorts, bent pins, debris or water ingress. 2. Check the wiring harness for any abrasions, pinching or any other sign of damage that may lead to a short circuit.

© 2026 JCB INDIA LTD

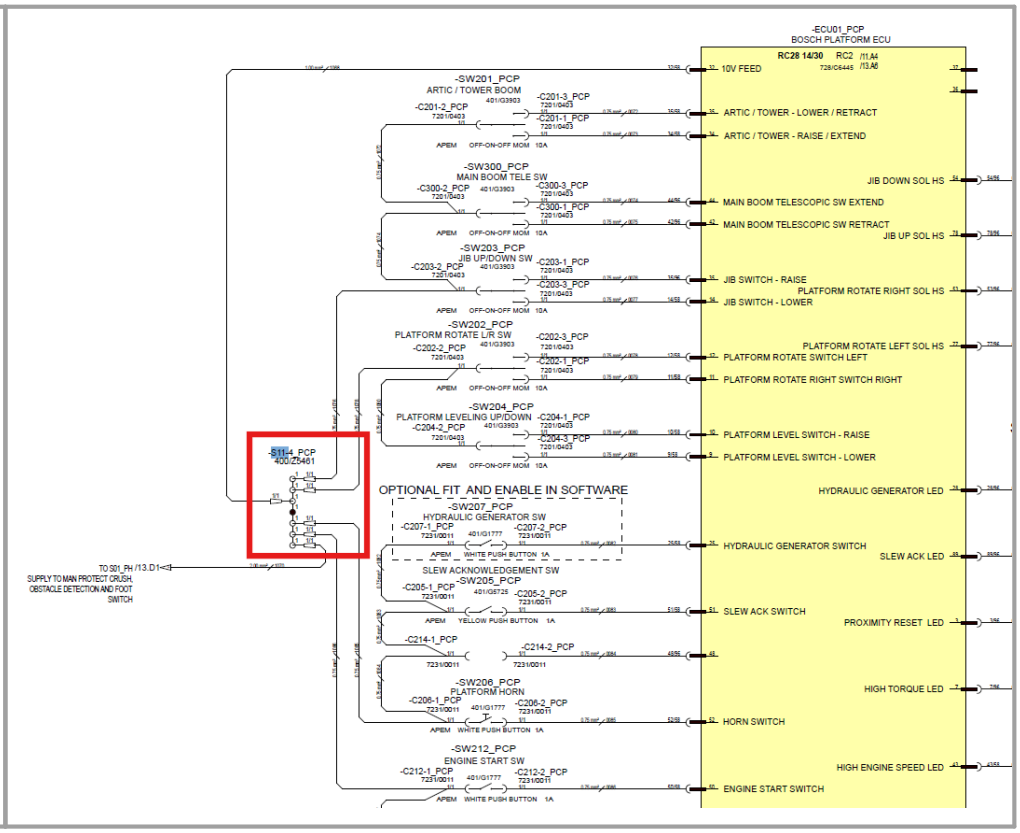

5.1.234 B1268-16

Error code:	B1268-16
ECU	Platform ECU
Description:	Platform 10v Feed - Platform 10v Feed Short Circuit to Low.
Component:	Platform ECU
Vehicle reaction:	Block all inputs connected to 10V present on the respective control panel.
Possible Cause:	1. A short circuit within the wiring harness 2. A short circuit to the chassis 3. A short circuit within the harness connectors 4. Water damage/ingress within the harness connectors 5. Damaged component

© 2026 JCB INDIA LTD

Service Action:	1. At platform control panel, measure voltage at DIN rail terminal -S11-4_PCP (Contains wires: #1068, #1070 #1076, #1078, #1085, #1086). Voltage should be +10VDC. If voltage is less than +10VDC then there is likely a short circuit to GND / Chassis. To narrow down fault location, remove each wire one at a time and re-measure voltage until the problem circuit has been identified. Wire #1068 is the +10V Feed from the Platform ECU - If this circuit is less than +10V, then the fault my be within the Platform Bosch ECU connector. Check Pin 32/58 and surrounding pins for shorts, bent pins, debris or water ingress. 2. Check the wiring harness for any abrasions, pinching or any other sign of damage that may lead to a short circuit to other wires or chassis. 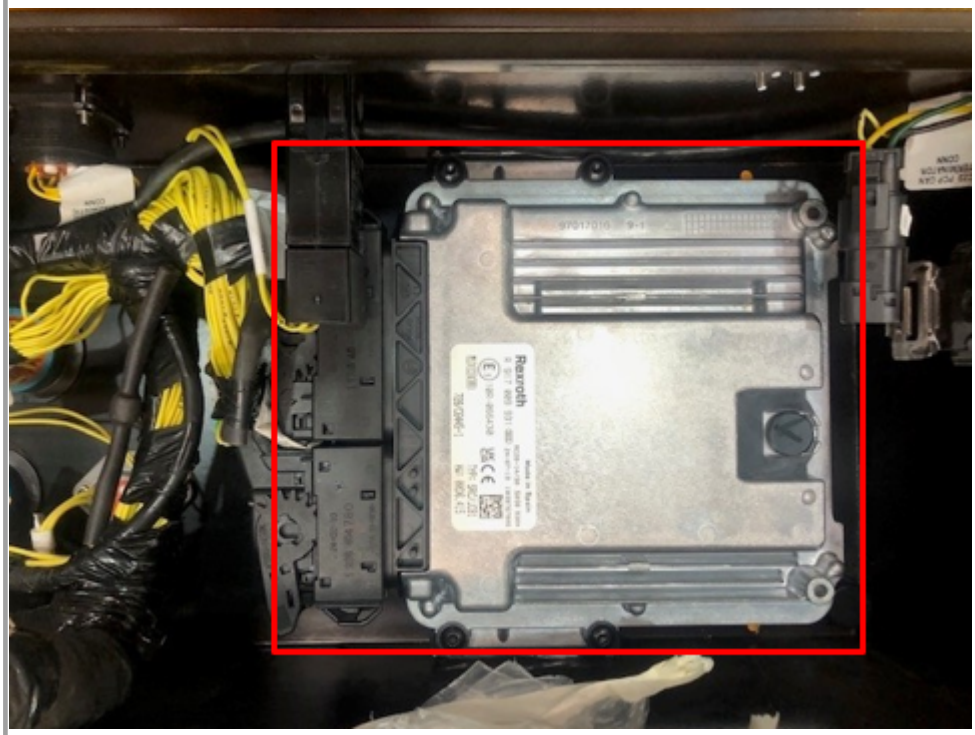

© 2026 JCB INDIA LTD

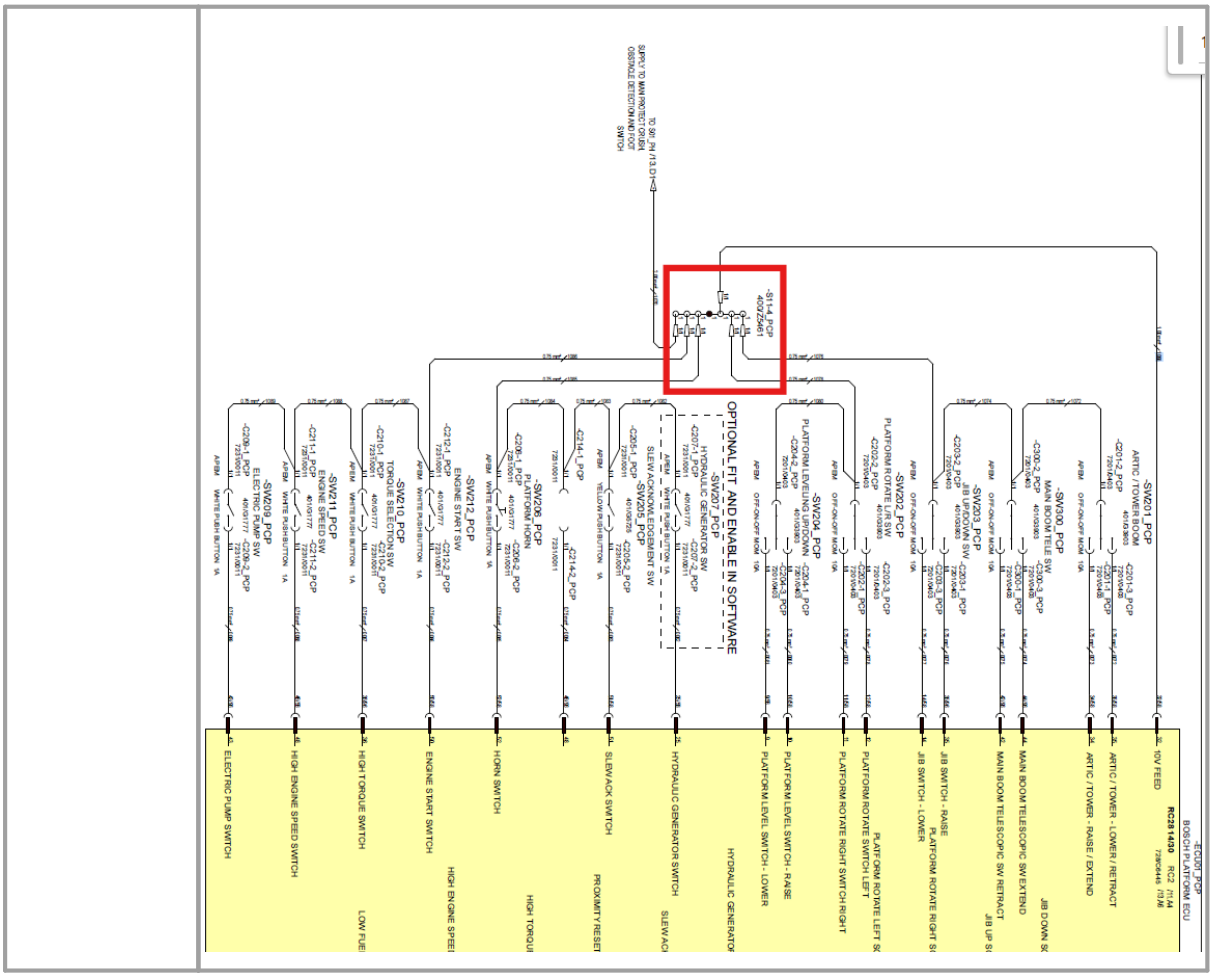

5.1.235 B1269-16

Error code:	B1269-16
ECU	Platform ECU
Description:	Buzzer - Buzzer Short Circuit to Low.
Component:	Buzzer
Vehicle reaction:	Detect failure mode. Disable output
Possible Cause:	1. A short circuit within the wiring harness 2. A short circuit to the chassis 3. A short circuit within the harness connectors 4. Water damage/ingress within the harness connectors

© 2026 JCB INDIA LTD

	5. Damaged component
Service Action:	1. In platform Control Panel, Check wire #4076 to Buzzer base -RB01_PCP Pin 1. 2. Check for short circuit to GND / Chassis. 3. Check terminals of Buzzer base for any damage, debris, water ingress etc 4. Check buzzer has not malfunctioned, test with new buzzer. 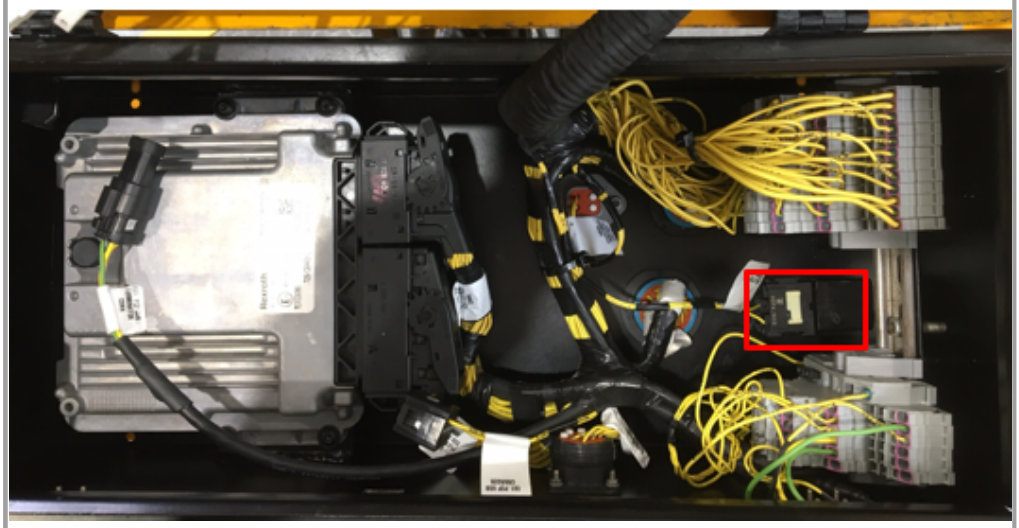 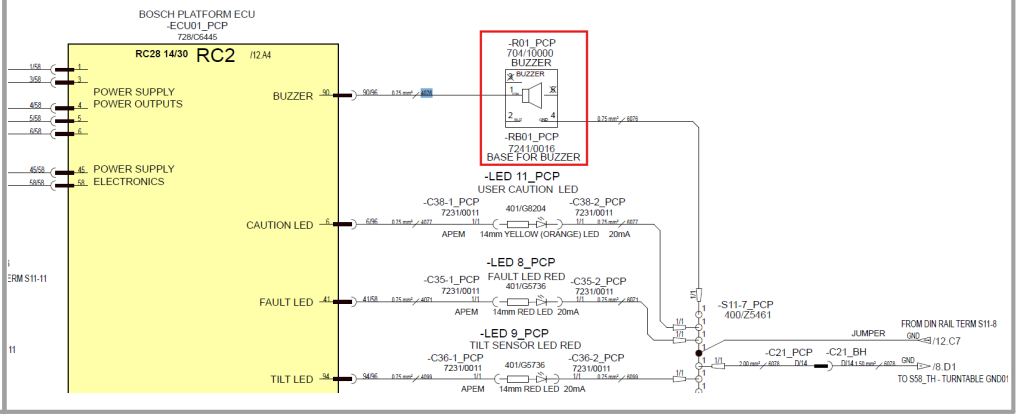

5.1.236 B1270-17

Error code:	**B1270-17**
ECU	Platform ECU
Description:	Buzzer - Buzzer Short Circuit to High.
Component:	Buzzer

© 2026 JCB INDIA LTD

Vehicle reaction:	Detect failure mode. Disable output
Possible Cause:	1. A short circuit within the wiring harness 2. A short circuit within the harness connectors 3. Water damage/ingress within the harness connectors 4. Damaged component
Service Action:	1. In platform Control Panel, Check wire #4076 to Buzzer base -RB01_PCP Pin 1. 2. Check for short circuit to High. 3. Check terminals of Buzzer base for any damage, debris, water ingress etc 4. Check buzzer has not malfunctioned, test with new buzzer. 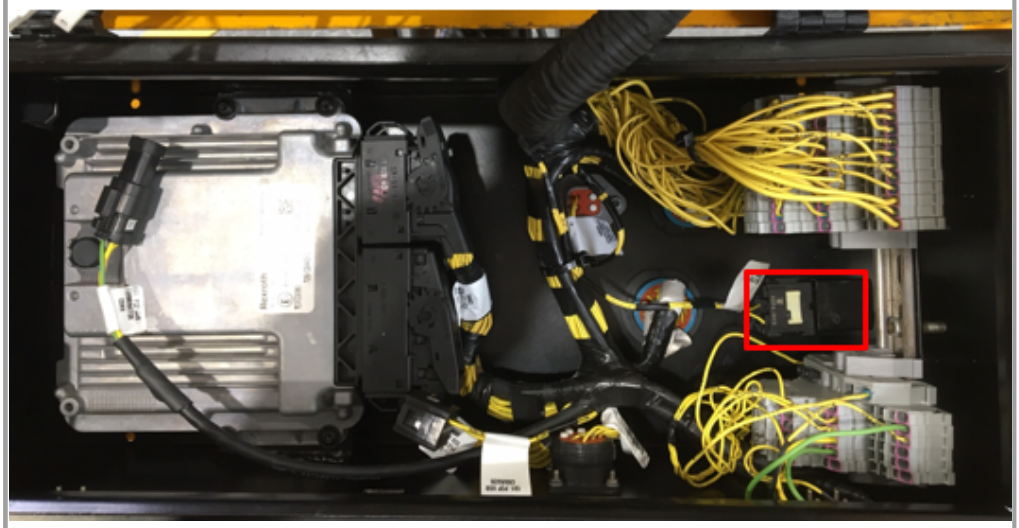 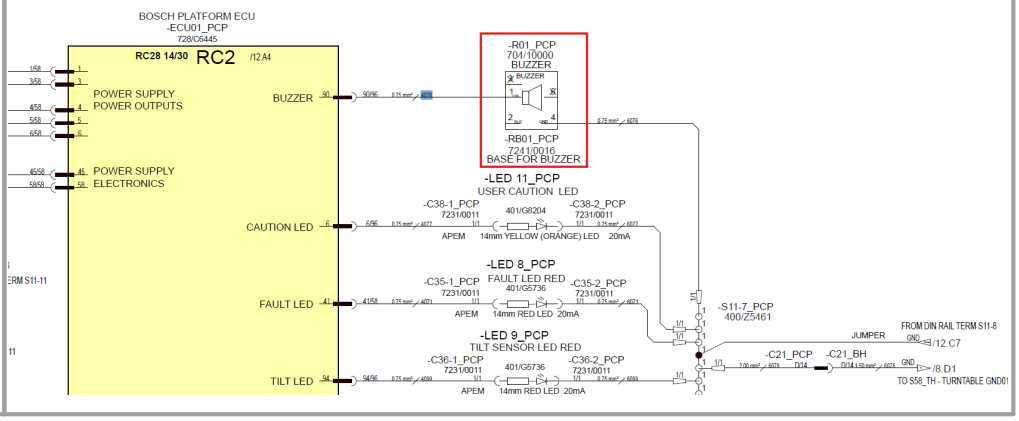

5.1.237 B1272-2F

Error code:	**B1272-2F**

© 2026 JCB INDIA LTD

ECU	Base ECU
Description:	OSCILLATING AXLE PRESSURE SENSOR >= 1V and < 6V in stowed mode without drive
Component:	Oscillating Axle Pressure Sensor
Vehicle reaction:	Detect failure mode; Prevent all Raise, Extend and Slew; In Raised or Slew position - prevent drive & steer; In Stowed and Forward position - allow drive
Possible Cause:	1. A short circuit within the wiring harness 2. A short circuit within the harness connectors 3. Water damage/ingress within the harness connectors 4. Damaged component
Service Action:	1. Output voltage of pressure sensor is 0.5 - 4.5VDC. Disconnect interconnect connectors -C214_TH and -C214_TH. Measure voltage at pin 4/4 (Wire #4012) on both connectors. If one of the measurements is above 4.5VDC then there is a short to high on that connection. Trace the fault back to where there is a short circuit to high. 2. Check interconnects -C214_TH and -C214_TH for any damage, shorts, debris or stray wire. Check the Base Bosch ECU connector (58-way) for any damage, bent pins debris etc. Check pin 27/58. 3. Check Sensor pin 1, Ground Connection and Wire #6012 for any cut or damage. 4. Check Ignition Relay R02_TCP and 5A fuse FU05_TCp and wire #1009& 1012. 5. Check all above connectors for any water ingress. 6. Check the pressure sensor for damage or malfunction. Replace component. 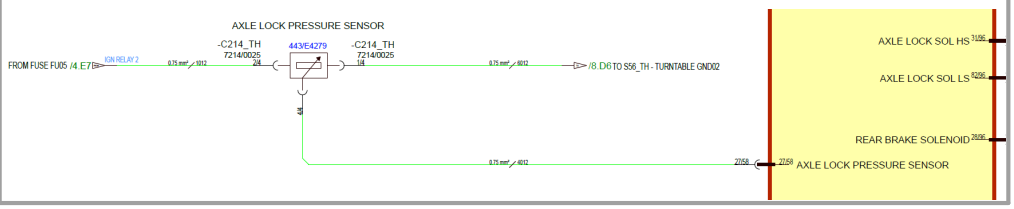

© 2026 JCB INDIA LTD

5.1.238 B1273-17

Error code:	B1273-17
ECU	Platform ECU
Description:	Horn - Platform Horn Button Short Circuit to High.
Component:	Horn Button
Vehicle reaction:	Detect failure mode; Ignore input
Possible Cause:	1. A short circuit within the wiring harness 2. A short circuit within the harness connectors 3. Water damage/ingress within the harness connectors 4. Damaged component
Service Action:	1. Check wiring between 'C26-XC2_PCP Pin 52/58 on the Bosch Platform ECU Connector' and 'C206-2_PCP on the Platform Horn Button'. 2. Disconnect 'C26-XC2_PCP Bosch Platform ECU Connector' and check terminal 52/58 ensuring that nothing is touching it. Same with 'C206-2_PCP on the Platform Horn Button'. 3. Check connectors are dry and free of debris. Check for damaged terminals on the 'C26-XC2_PCP Bosch Platform ECU Connector'. 4. Check operation of the Platform Horn Button. Check for physical damage to the Horn Button, connectors and other harness components.  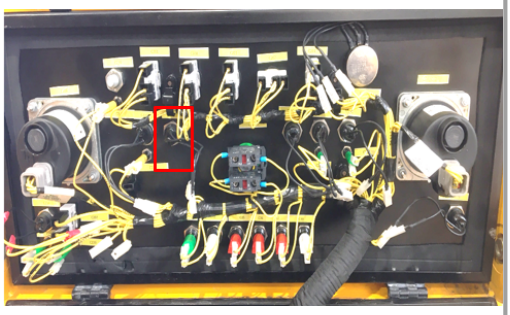

© 2026 JCB INDIA LTD

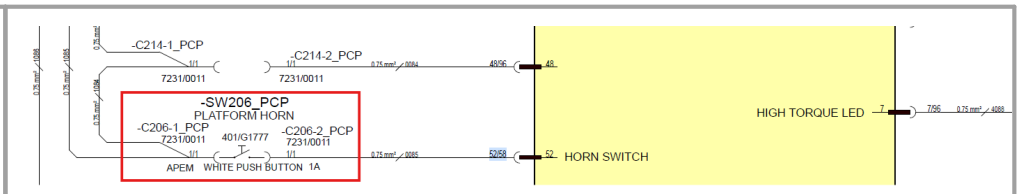

5.1.239 B1274-16

Error code:	B1274-16
ECU	Platform ECU
Description:	Horn - Platform Horn Button Short Circuit to Low.
Component:	Horn Button
Vehicle reaction:	Detect failure mode; Ignore input
Possible Cause:	1. A short circuit within the wiring harness 2. A short circuit to the chassis 3. A short circuit within the harness connectors 4. Water damage/ingress within the harness connectors 5. Damaged component
Service Action:	1. Check wiring between 'C26-XC2_PCP Pin 52/58 on the Bosch Platform ECU Connector' and 'C206-2_PCP on the Platform Horn Button'. 2. Check the wiring has not shorted to the chassis of the machine (caused perhaps by pinching or abrasion). 3. Disconnect 'C26-XC2_PCP Bosch Platform ECU Connector' and check terminal 52/58 ensuring that nothing is touching it. Same with 'C206-2_PCP on the Platform Horn Button'. 4. Check connectors are dry and free of debris. Check for damaged terminals on the 'C26-XC2_PCP Bosch Platform ECU Connector'. 5. Check operation of the Platform Horn Button. Check for physical damage to the Horn Button, connectors and other harness components.

© 2026 JCB INDIA LTD



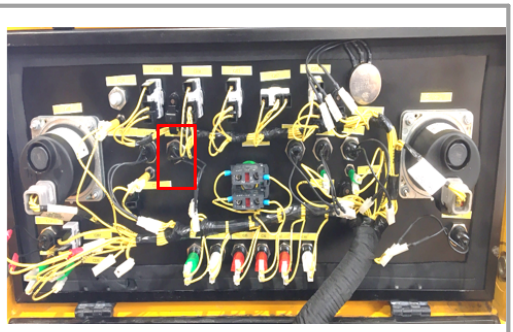

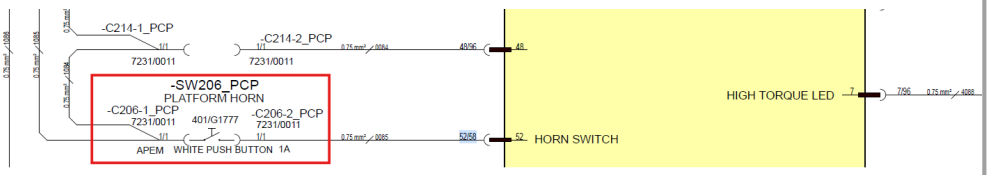

5.1.240 B1275-24

Error code:	B1275-24
ECU	Platform ECU
Description:	Horn - Platform Horn Button Stuck >10s.
Component:	Horn Button
Vehicle reaction:	Detect failure mode; Ignore input
Possible Cause:	1. A short circuit within the wiring harness 2. A short circuit within the harness connectors 3. Water damage/ingress within the harness connectors 4. Damaged component
Service Action:	Check Wiring • Verify continuity between: ○ C26-XC2_PCP Pin 52/58 on the Bosch Platform ECU Connector ○ C206-2_PCP on the Platform Horn Button • Look for breaks, shorts, or pinched wires.

© 2026 JCB INDIA LTD

	Disconnect and Inspect
	• Disconnect C26-XC2_PCP Bosch Platform ECU Connector.
	  ○ Check terminal 52/58 to ensure nothing is touching it.
	• Disconnect C206-2_PCP Platform Horn Button connector.
	  ○ Ensure it is isolated and clean.
	
	Connector Condition
	• Check both connectors for:
	  ○ Dryness (no moisture)
	  ○ No debris
	  ○ No corrosion
	• Inspect terminals for physical damage or bent pins.
	
	Horn Button Operation
	• Test the Platform Horn Button:
	  ○ Ensure it functions mechanically.
	  ○ Check for physical damage to button, connectors, and harness components.
	
	 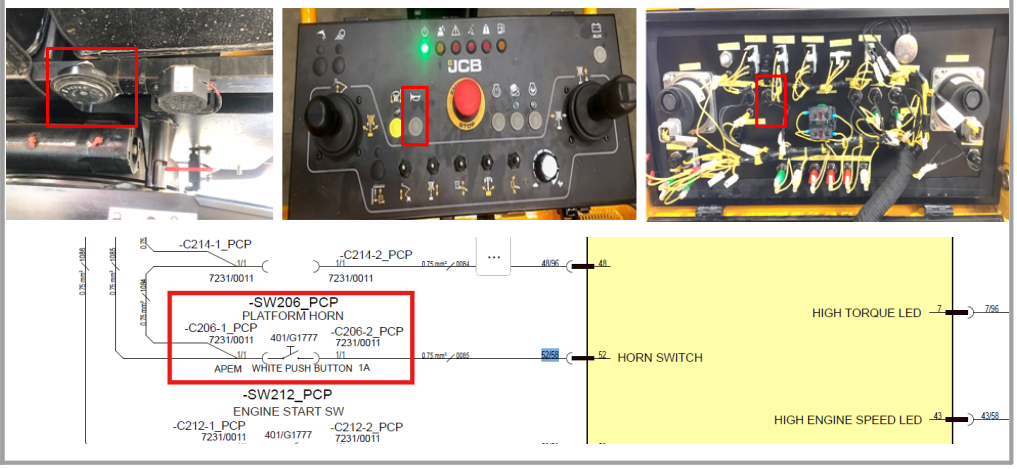

5.1.241 B1276-24

Error code:	B1276-24
ECU	Base ECU

© 2026 JCB INDIA LTD

Description:	Base Start lock Stuck (VBATT <8.5VDC)
Component:	ECU
Vehicle reaction:	Base ECU Software execution terminated. ECU does not run. Machine disabled.
Possible Cause:	1. A open circuit within the harness connectors 2. Water damage/ingress within the harness connectors 3. Damaged component
Service Action:	1. Check voltage at Base ECU pins 1/58, 3/58, 4/58, 5/58 and 6/58. Voltage can be measured at ECU feed fuse FU03_TCP. 2. Check continuity of GND pin 2/58 to Turntable Ground and Check Battery Voltage. 3. Check connectors for water ingress, bent or backed out pins, debris or any damage to the wiring harness. 4. If no fault found, replace ECU 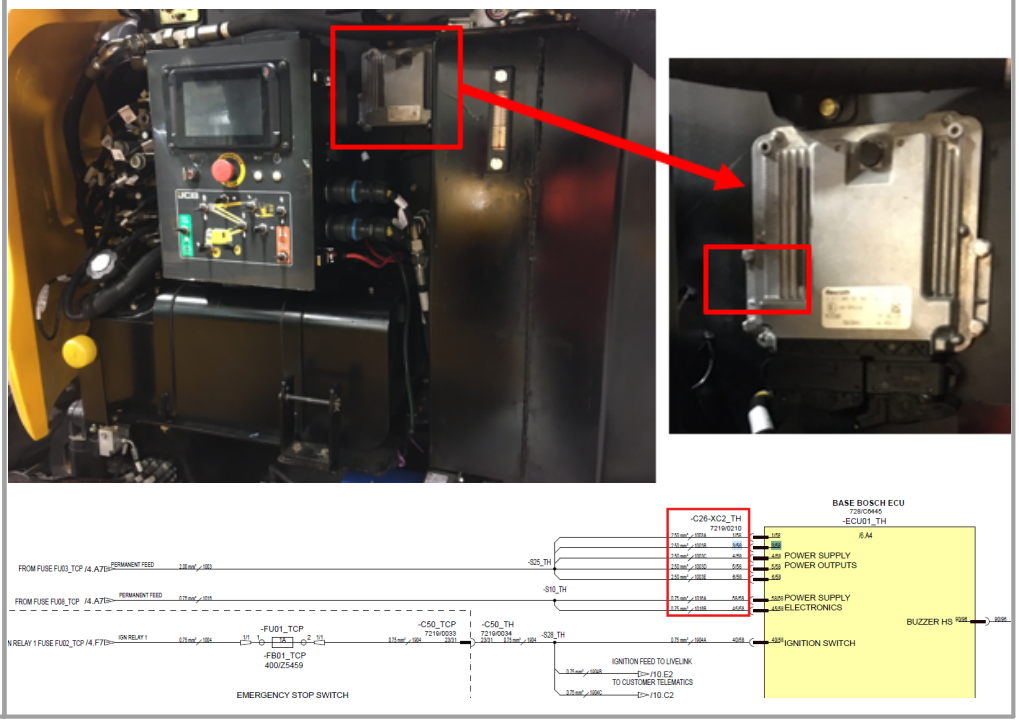

5.1.242 B1277-24

Error code:	**B1277-24**

© 2026 JCB INDIA LTD

ECU	Platform ECU
Description:	Platform Startlock Stuck (Generic o/p fault)
Component:	ECU
Vehicle reaction:	Base ECU Software execution terminated. ECU does not run. Machine disabled.
Possible Cause:	1. A open circuit within the harness connectors 2. Water damage/ingress within the harness connectors 3. Damaged component
Service Action:	1. Check voltage at Platform ECU pins 1/58, 3/58, 4/58, 5/58 and 6/58. Voltage can be measured at DIN Rail Terminal -S11-1_PCP. Check all wires are fully inserted. 2. Check interconnect -C21_BH / -C21_PCP. Ensure wires not damaged, pins not backed out or no water ingress. 3. Check interconnect -C37_TH / -C37_BH. Ensure wires not damaged, pins not backed out or no water ingress. 4. Check interconnect -C39_TCP / -C39_TH. Ensure wires not damaged, pins not backed out or no water ingress. 5. Check voltage at fuse -FU06_TCP 6. Check Relay output of IGN RELAY 3 (Wire #0013) to DIN Rail terminal -S11-3_TCP 7. Check voltage at DIN Rail Terminal -S11-19_TCP (Wire #2013) 8. Check continuity of GND pin 2/58 to Turntable Ground. 9. Check connectors for water ingress, bent or backed out pins, debris or any damage to the wiring harness. 10. If no fault found, replace ECU

© 2026 JCB INDIA LTD

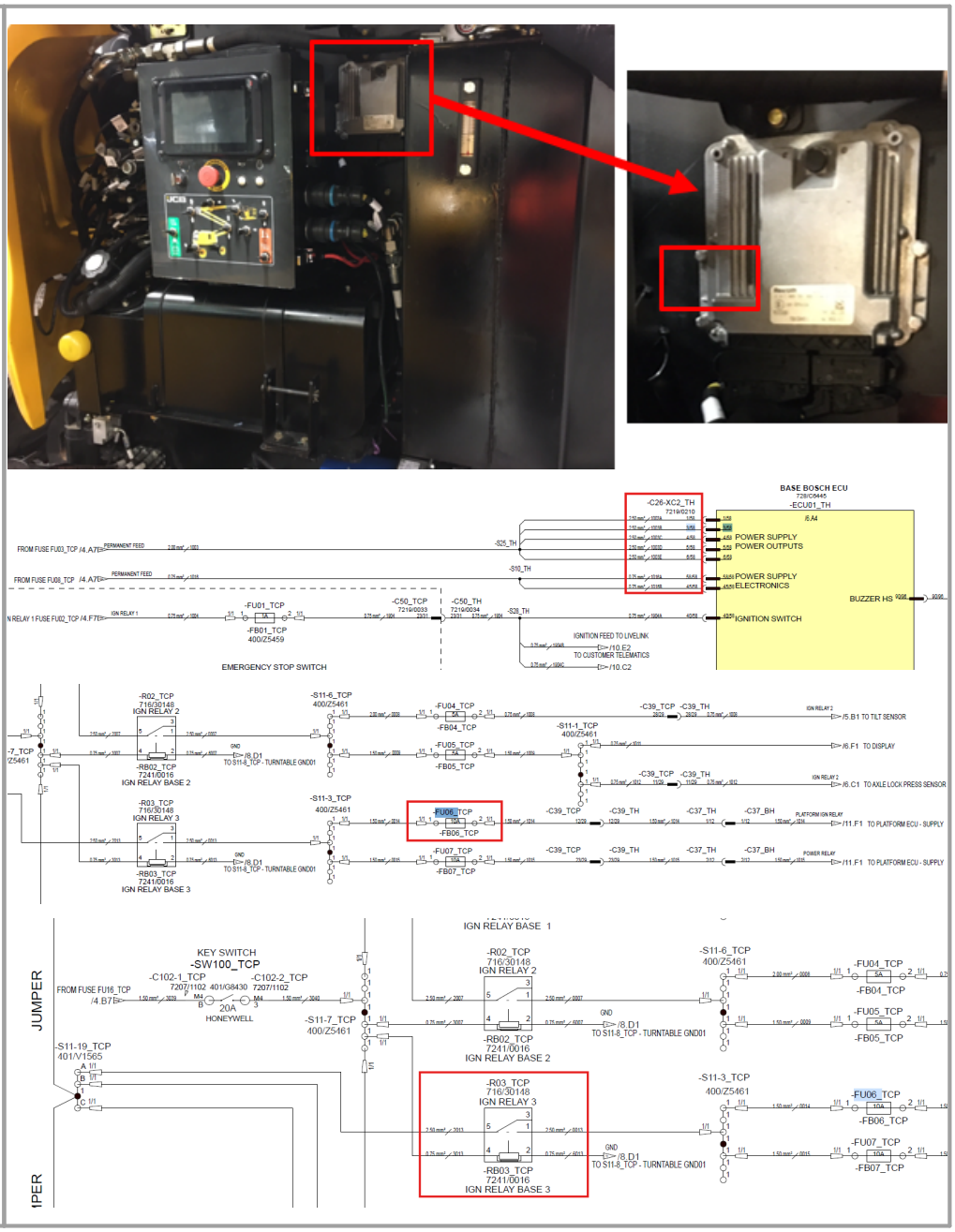

5.1.243 B1278-17

Error code:	B1278-17
ECU	Base ECU
Description:	REAR BRAKE Solenoid Valve Short Circuit to High or Open Circuit
Component:	Rear Brakes Solenoid

© 2026 JCB INDIA LTD

Vehicle reaction:	Detect failure modes. Don't disable any Disable output and don't ignore any input
Possible Cause:	1. A short or open circuit within the wiring harness 2. A short or open circuit within the harness connectors 3. Water damage/ingress within the harness connectors 4. Damaged component
Service Action:	1. Fault indicates short to high or open circuit to Rear Brake Solenoid. Check voltage at solenoid connector -C03_CH pin 1/2. 2. Check continuity of GND path from Solenoid connector -C03_CH pin 2/2 to Turntable GND. 3. Check Interconnect -C22_TH / -C22_TH pin 3/12. Check bent / backed out pins, debris, shorts or water ingress. 4. Check Base Bosch ECU terminal 28/96. Check Connector for bent / backed out pins, debris, shorts or water ingress. 5. Check wire #4039 for continuity from Base Bosch ECU pin 38/96 to Rear Brake Solenoid connector -C03_CH pin 1/2. 6. Check the harness for any abrasions, pinching or any other damage that may lead to a fault. 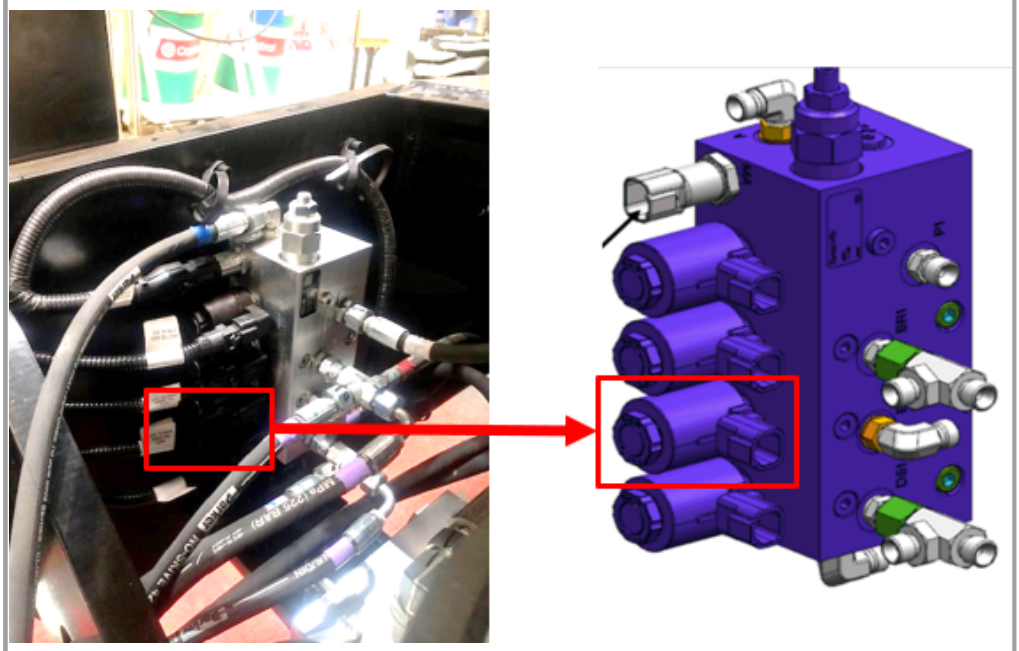

© 2026 JCB INDIA LTD

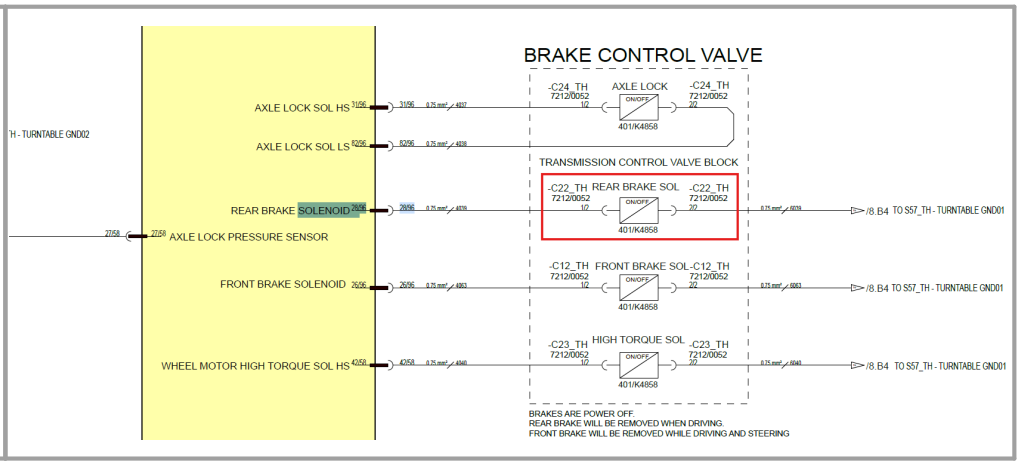

5.1.244 B1279-16

Error code:	B1279-16
ECU	Base ECU
Description:	REAR BRAKE Solenoid Valve Short Circuit to Low
Component:	Rear Brakes Solenoid
Vehicle reaction:	Detect failure modes. Don't disable any Disable output and don't ignore any input
Possible Cause:	1. A short circuit within the wiring harness 2. A short circuit to the chassis 3. A short circuit within the harness connectors 4. Water damage/ingress within the harness connectors 5. Damaged component
Service Action:	1. Fault indicates short to GND to Rear Brake Solenoid. Check voltage at solenoid connector -C03_CH pin 1/2. Check no short to GND at same pin. 2. Check continuity of GND path from Solenoid connector -C03_CH pin 2/2 to Turntable GND. 3. Check Interconnect -C22_TH / -C22_TH pin 3/12. Check bent / backed out pins, debris, shorts or water ingress. 4. Check Base Bosch ECU terminal 28/96. Check Connector for bent / backed out pins, debris, shorts or water ingress.

© 2026 JCB INDIA LTD

	5. Check wire #4039 for continuity from Base Bosch ECU pin 38/96 to Rear Brake Solenoid connector -C03_CH pin 1/2. 6. Check the harness for any abrasions, pinching or any other damage that may lead to a fault. 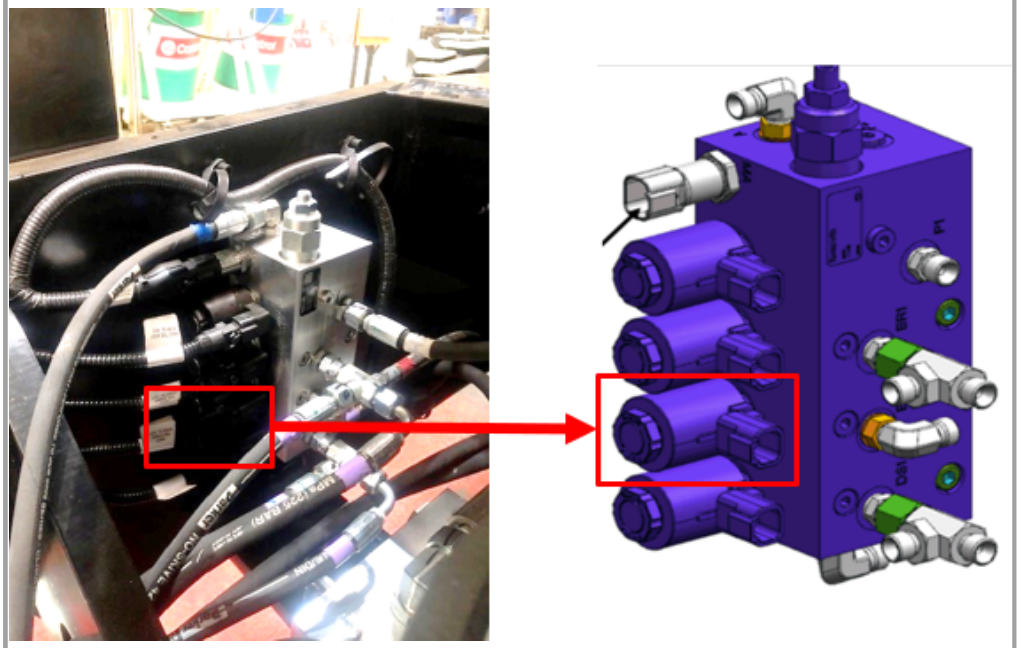 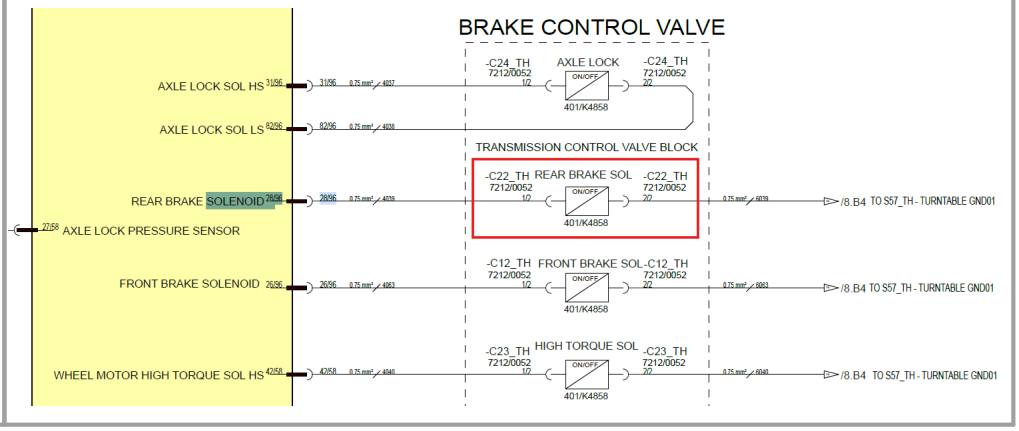

5.1.245 B1281-16

Error code:	B1281-16
ECU	Base ECU
Description:	VSS2 Low Voltage (<= 9.5V)
Component:	ECU

© 2026 JCB INDIA LTD

Vehicle reaction:	Detect failure mode; Disable all Disable output and ignore input
Possible Cause:	1. Short Circuit 2. Excessive load 3. Water Ingress
Service Action:	1. VSS 2 (+10V) Voltage at Pin 32/58 on the Base Bosch ECU is equal to or below +9.5V. There is no circuitry attached to this pin. Check Connector for bent pins, debris, water ingress or any other reason a short to ground may exist. If fault remains, change the ECU. 2. Check System voltage 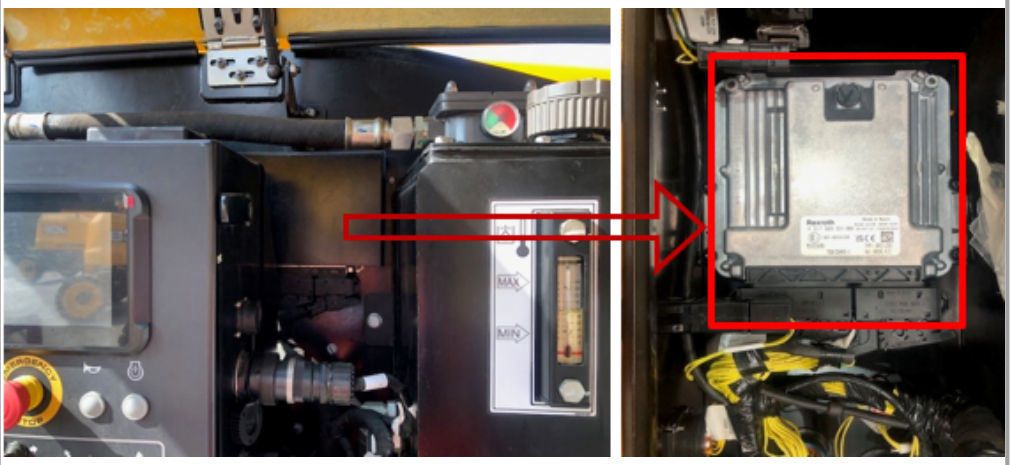 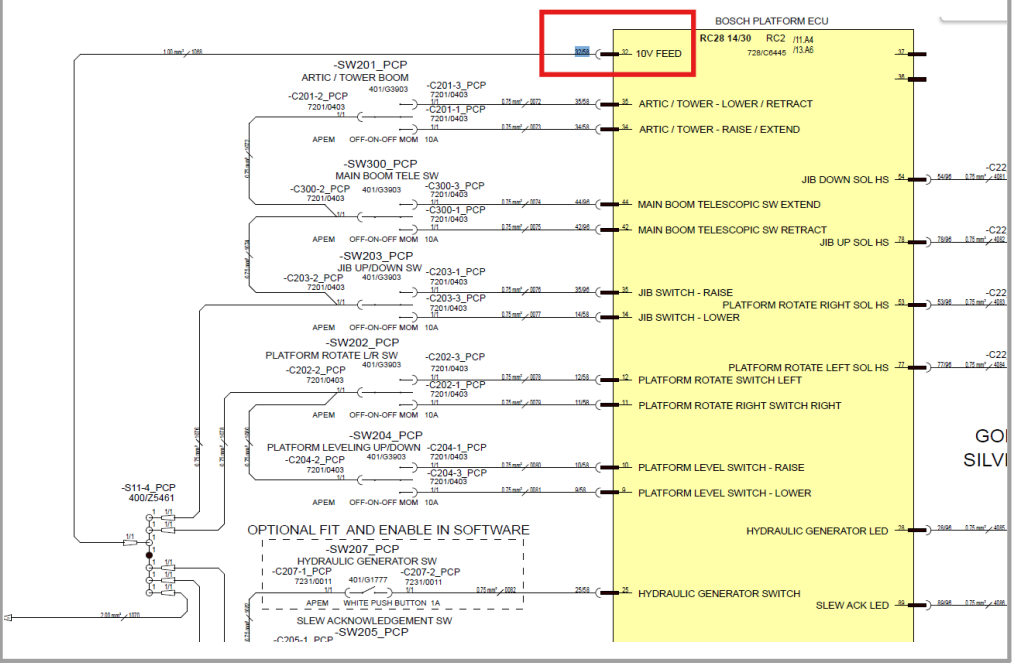

.

© 2026 JCB INDIA LTD

5.1.246 B1282-13

Error code:	B1282-13
ECU	Base ECU
Description:	Water in fuel OC during engine startup: (Transition from GND to OC is expected within 2 secs of engine ignition ON)
Component:	Water in Fuel Sensor
Vehicle reaction:	Reduced Torque (40% Torque De-rate):-YES
Possible Cause:	1. A short circuit within the wiring harness 2. A short circuit within the harness connectors 3. Water damage/ingress within the harness connectors 4. Damaged component
Service Action:	1.Check the harness is securely fitted to the sensor and clean the surrounding area around the sensor. 2. The sensor is securely connected when clicked into place. 3. Check 3A Fuse F14 in POD Box. 3.Disconnect the electrical connector from the sensor and inspect the sensor and harness connector pins. 4. Check Ground connection and wire #6039. 4.If the pins are pushed back, damaged or corroded repair or replace as required. 5.Check 12 Volt in wire no. 1039 and 6039.

© 2026 JCB INDIA LTD

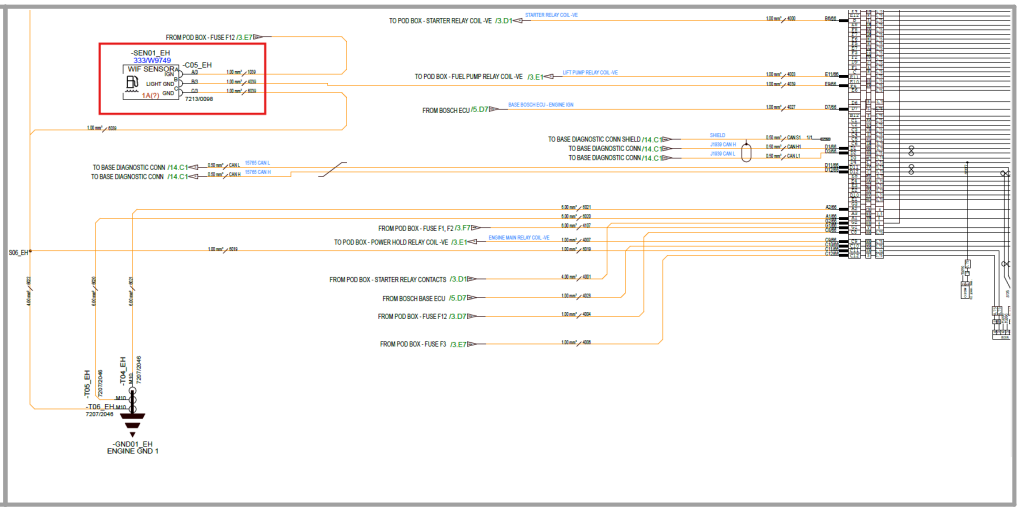

5.1.247 B1283-16

Error code:	B1283-16
ECU	Platform ECU
Description:	VSS1 Low Voltage (<= 4.5V)
Component:	ECU
Vehicle reaction:	Detect failure mode; Disable all Disable output and ignore input of Platform Panel
Possible Cause:	1. Short Circuit 2. Excessive load 3. Water Ingress
Service Action:	1. VSS 1 (+5 V) Voltage at Pin 19/58 on the Platform Bosch ECU is equal to or below +4.5V. This voltage can be measured at the speed potentiometer terminal -C-L11-3_PCP. Check no short or damage at potentiometer. Check Connector for bent pins, debris, water ingress or any other reason a short to ground may exist. If fault remains, change the ECU. 2. Check System voltage.

© 2026 JCB INDIA LTD

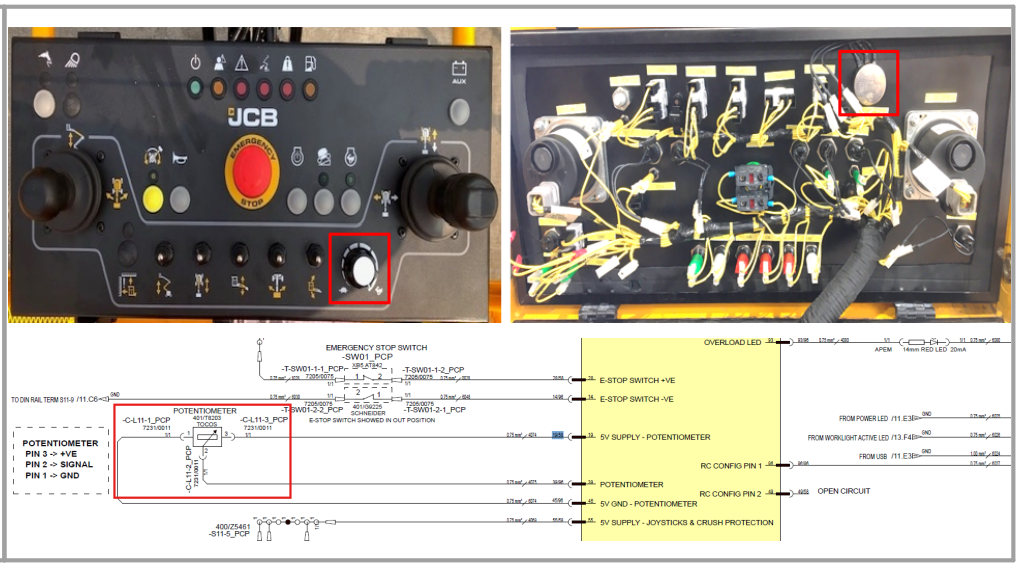

5.1.248 B1284-16

Error code:	B1284-16
ECU	Platform ECU
Description:	VSS2 Low Voltage (<= 9.5V)
Component:	ECU
Vehicle reaction:	Detect failure mode; Disable all Disable output and ignore input of Platform Panel
Possible Cause:	1. Short Circuit 2. Excessive load 3. Water Ingress
Service Action:	1. VSS 2 (+10V) Voltage at Pin 32/58 on the Platform Bosch ECU is equal to or below +9.5V. Voltage can be measured at DIN Rail Terminal -S11-4_PCP. Check other wires coming from this DIN Rail Terminal (#1070, #1076, #1078, #1085, #1086) Try removing these wires one at a time to narrow down fault location.If no fault found, check platform ECU Connector for bent pins, debris, water ingress or any other reason a short to ground may exist. If fault remains, change the ECU.

© 2026 JCB INDIA LTD

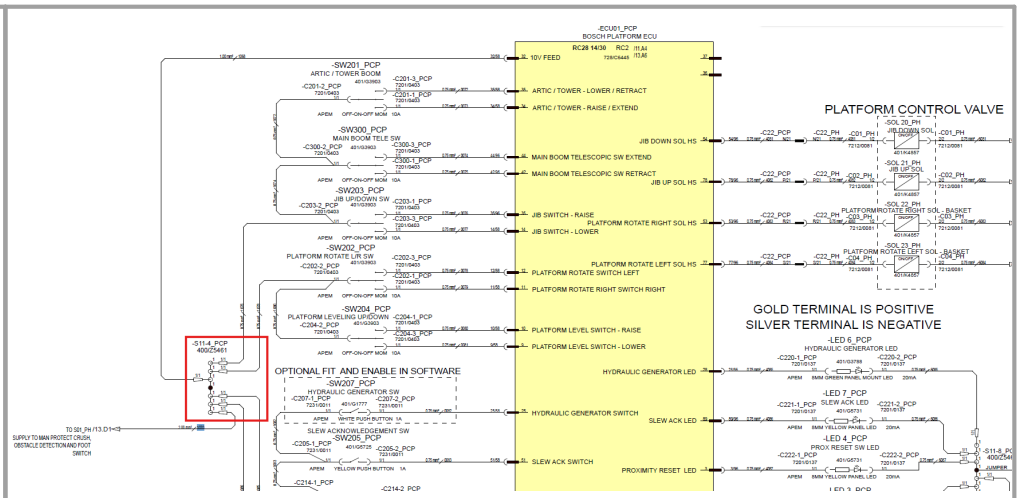

5.1.249 B1285-16

Error code:	B1285-16
ECU	Platform ECU
Description:	VSS3 Low Voltage (<= 4.5V)
Component:	ECU
Vehicle reaction:	Detect failure mode; Disable all Disable output and ignore input of Platform Panel
Possible Cause:	1. Short Circuit 2. Excessive load 3. Water Ingress
Service Action:	1. VSS 3 (+5 V) Voltage at Pin 55/58 on the Platform Bosch ECU is equal to or below +4.5V. This voltage provides supply to Joysticks and Crush Protection. The voltage can be measured at DIN Rail Terminal -S11-5_PCP (Wire #4069). Check all wires at DIN Rail Terminal (#4067, #4068, #4070). Remove one wire at a time and measure voltage from ECU to see if it raises back to +5V. If no fault found, check platform ECU Connector for bent pins, debris, water ingress or any other reason a short to ground may exist. If fault remains, change the ECU.

© 2026 JCB INDIA LTD

	2. Check System voltage. 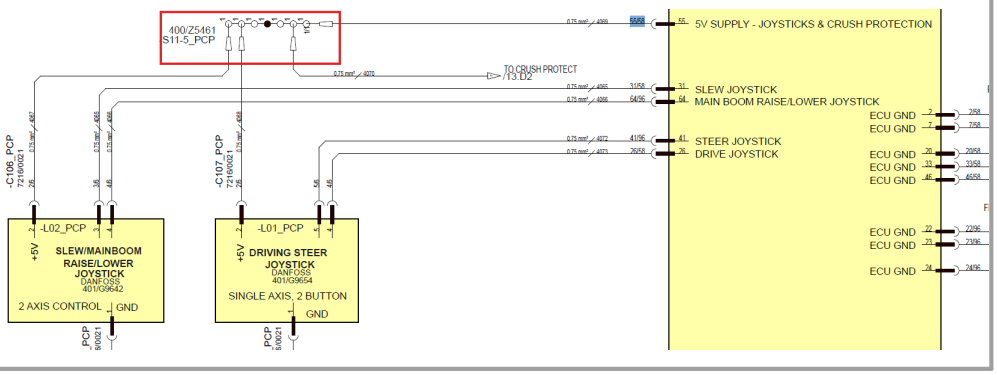

5.1.250 B1286-16

Error code:	B1286-16
ECU	Base ECU
Description:	Water in fuel Short to Ground
Component:	Water in Fuel Sensor
Vehicle reaction:	Reduced Torque (40% Torque De-rate):-YES
Possible Cause:	1. A short circuit within the wiring harness 2. A short circuit within the harness connectors 3. Water damage/ingress within the harness connectors 4. Damaged component
Service Action:	1.Check the harness is securely fitted to the sensor and clean the surrounding area around the sensor. 2.The sensor is securely connected when clicked into place. 3.Disconnect the electrical connector from the sensor and inspect the sensor and harness connector pins. 4.If the pins are pushed back, damaged or corroded repair or replace as required. 5.Check 12 Volt in wire no. 1039 and 6022F

© 2026 JCB INDIA LTD

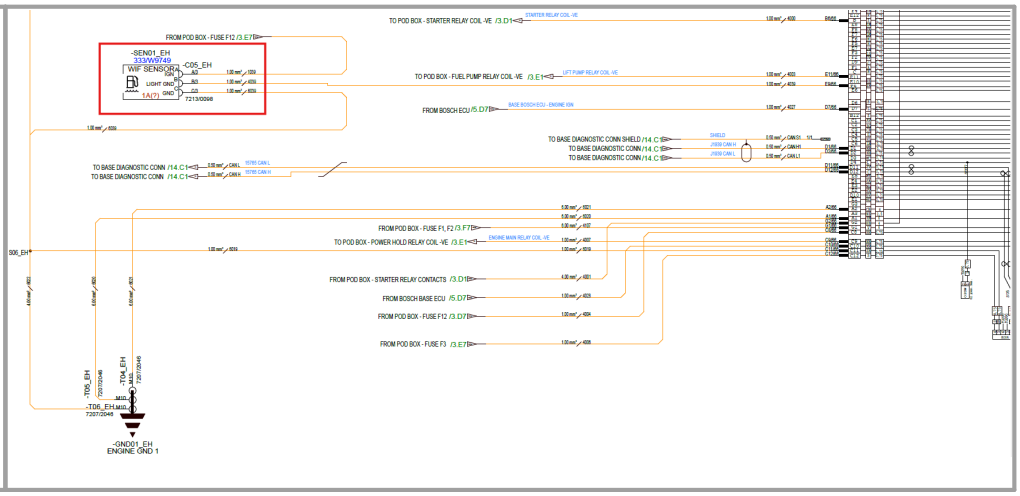

5.1.251 B1287-2F

Error code:	B1287-2F
ECU	Base ECU
Description:	Fuel Sender - Fuel Sender Data Erratic.
Component:	Fuel Sender
Vehicle reaction:	Detect failure mode; Don't send any value to Display
Possible Cause:	1. Short Circuit 2. Open Circuit 3. Poor Connection 4. Water Ingress 5. Damaged Component
Service Action:	1. Check connections of Fuel Level Sender -C28_TH. Ensure connections are well made, free of contaminant. Check terminals are seated correctly. Disconnect connector from fuel level sender and measure resistance. Resistance should measure between 10 and 178 Ohms (depending on quantity of fuel in tank). Check fuel level sender connector is undamaged. 2. Check continuity of GND from -C28_TH pin 2/2 to Turntable Ground (Wire #6033).

© 2026 JCB INDIA LTD

	3. Check continuity of Fuel Level Signal from -C28_TH pin 1/2 to Base Bosch ECU pin 21/96 (Wire #4033) 4. Check condition of Base Bosch ECU connector, check for bent or backed out pins, water ingress, debris or any other fault. 5. Check condition of wiring harness between fuel level sender and ECU 6. Replace fuel level sender. 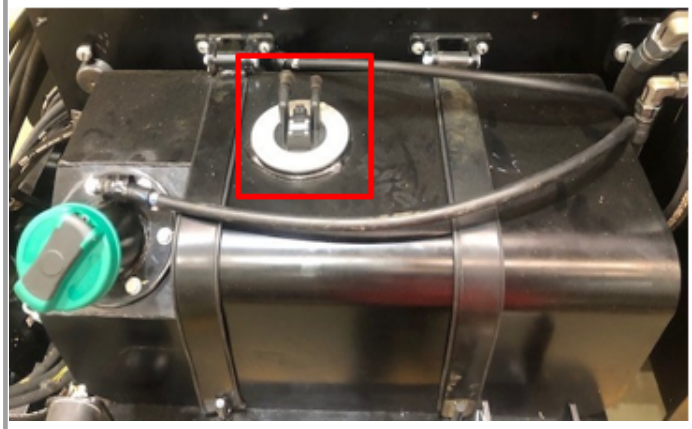 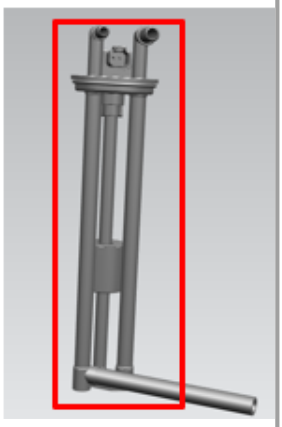 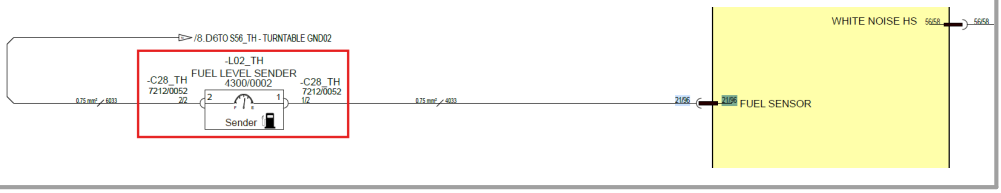

5.1.252 B1288-2F

Error code:	B1288-2F
ECU	Base ECU
Description:	OSCILLATING AXLE PRESSURE SENSOR SOFTWARE Failure
Component:	OSCILLATING AXLE PRESSURE SENSOR
Vehicle reaction:	Detect failure mode with Safout method - Switch Axle Lock o/p to off; Base disables Lift Main Boom and Artic Boom, Extend Main Boom, Slew and Drive functions (in slew position and Raised mode)
Possible Cause:	1. Short Circuit 2. Open Circuit 3. Poor Connection 4. Water Ingress

© 2026 JCB INDIA LTD

	5. Damaged Component
Service Action:	1. Check connections to Pressure sensor 2. Check the voltage at Connector C214_TH 2/4, if no voltage need to investigate as per schemetic 2. Check wiring at Pressure sensor connector 4. Check Base ECU Pin 27/58 for any damage, bent or back out. 5. Check wire 1012, 6012 and 4012 for any cut, short or damage. 6. Replace the Pressure sensor if damage or Faulty. 7. If Sensor is OK, Reflash the software with latest Version. 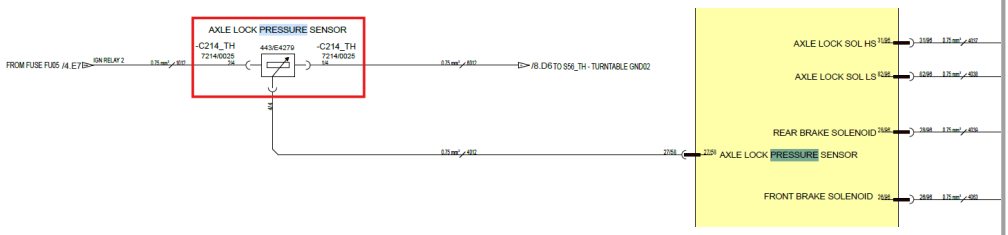

5.1.253 B1300-2F

Error code:	**B1300-2F**
ECU	Base ECU
Description:	ALTERNATOR FAULT
Component:	Alternator
Vehicle reaction:	Engine off - Alternator switch On - Alternator icon on constant, fault icon flashes, Fault LED at platform flashes. Both buzzers beep. Engine on - Alternator switch Off - Alternator icon on constant, fault icon flashes, Fault LED at platform flashes. Both buzzers beep.

© 2026 JCB INDIA LTD

Possible Cause:	1. Short Circuit 2. Open Circuit 3. Poor Connection 4. Water Ingress 5. Damaged Component
Service Action:	1. Check D+ Relay -R05_TCP. 2. At relay, check pin 5 (Wire #2034). Should be +12VDC 3. At relay, check D+ input on Pin 4 (Wire #1036C). Should be high when engine is running. If not - Check interconnect -C39_TH / -C39_TCP for fault. If Ok, check interconnect -C41_EH / -C41_TH for fault. If Ok, Check continuity from -C41_EH (Wire #4040) to Alternator terminal -T2 (Wire #4033) 4. At D+ Relay -R05_TCP, check ground connection from pin 2 (Wire #6034) to Turntable Ground. 5. At Relay, Check Continuity from Pin 1 (Wire #0034) to -S11-4_TCP. Voltage should also be +12VDC when engine is running. 6. Check Fuse -FU12_TCP (5A) 7. Check Continuity from -S11-4_TCP to Interconnect -C39_TCP pin 19/29. If Ok, Check Continuity from -C39_TH pin 19/29 to Base Bosch ECU Pin 58/96. Check voltage at this pin also, should be +12VDC when engine running. 8. Check Base Bosch Connector for any damage, water ingress, debris etc. 9. Check all harness runs in this circuit for any damage. 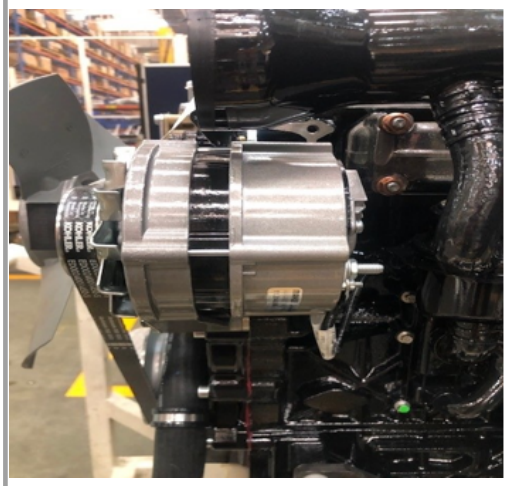 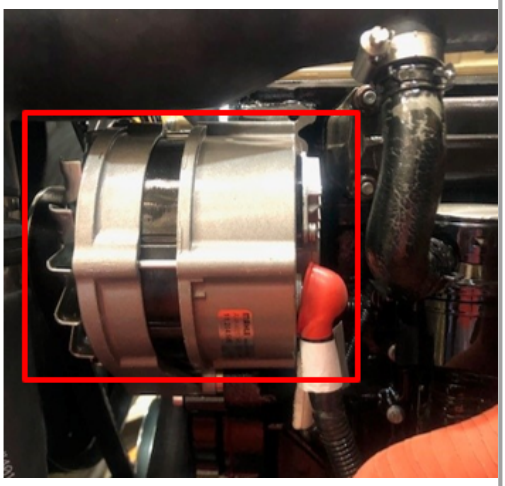

© 2026 JCB INDIA LTD

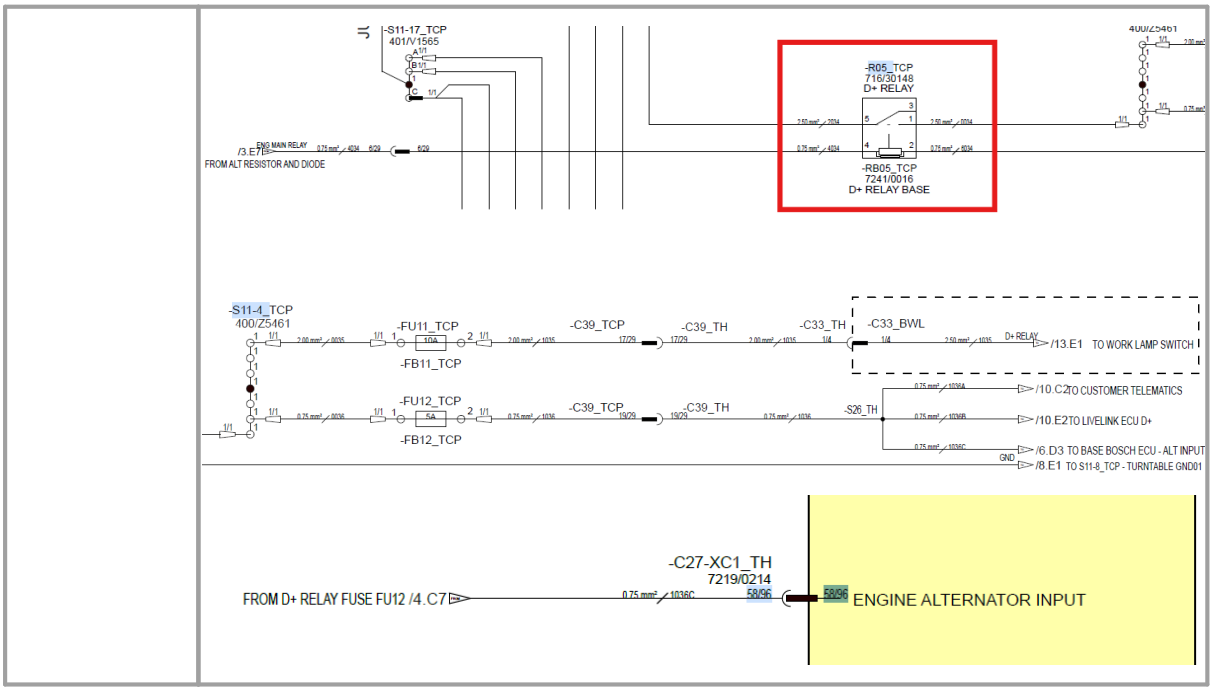

5.1.254 B1301-2F

Error code:	B1301-2F
ECU	Base ECU
Description:	Oscillating Axle - Oscillating Axle Pressure Sensor Failure.
Component:	Oscillating Axle Pressure Sensor
Vehicle reaction:	Detect failure mode; Prevent all Raise, Extend and Slew; In Raised or Slew position - prevent drive & steer; In Stowed and Forward position - allow drive
Possible Cause:	1. A short circuit within the wiring harness 2. A short circuit within the harness connectors 3. Water damage/ingress within the harness connectors 4. Damaged component
Service Action:	1. Output voltage of pressure sensor is 0.5 - 4.5VDC. Disconnect interconnect connectors -C214_TH and -C214_TH. Measure voltage at pin 9/12 (Wire #4012) on both connectors. If one of the measurements is above

© 2026 JCB INDIA LTD

	4.5VDC then there is a short to high on that connection. Trace the fault back to where there is a short circuit to high. 2. Check interconnects -C214_TH and -C214_TH for any damage, shorts, debris or stray wire. Check the Base Bosch ECU connector (58-way) for any damage, bent pins debris etc. Check pin 27/58. 3. Check all above connectors for any water ingress. 4. Check the pressure sensor for damage or malfunction. Replace component. 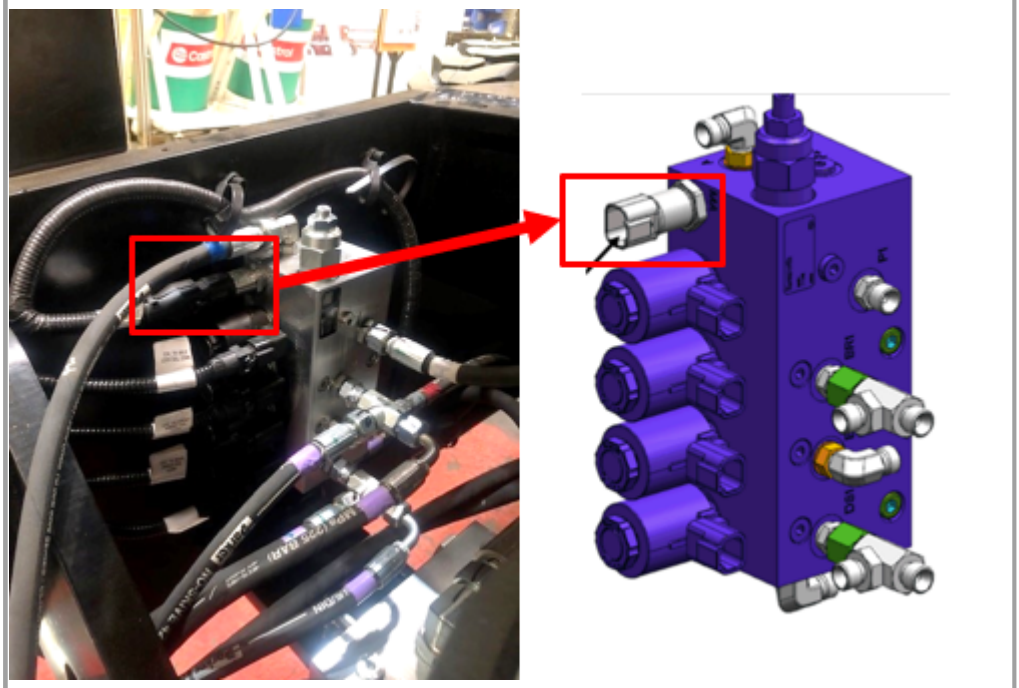

5.1.255 B1302-2F

Error code:	B1302-2F
ECU	Base ECU
Description:	RC CONFIG Short Circuit Plausibility Check

© 2026 JCB INDIA LTD

Component :	ECU
Vehicle reaction:	After ignition: Detect failure mode; Disable all functionalities of respective controller; Before ignition: check in start lock logic and control will be stuck in start lock mode; Detect failure mode.
Possible Cause:	1. Short or Open Circuit on CAN Bus network 2. Water ingress on CAN Bus connector / device 3. Harness damage
Service Action:	1. Check CAN Bus terminators at both ends of CAN Network (Platform and Base Control Panels) 2. Remove one CAN Bus terminator and measure resistance of CAN-H to CAN-L. Should be 120 Ohms. If value is low, check CAN Bus for short circuits, If value is High, Check for open circuits (including interconnects) 3. Check for water ingress, short or open circuits in all connectors of devices attached to CAN Bus. 4. Connect Service Master via diagnostic connector, User CAN diagnostics to check which devices are connected and operating correctly. 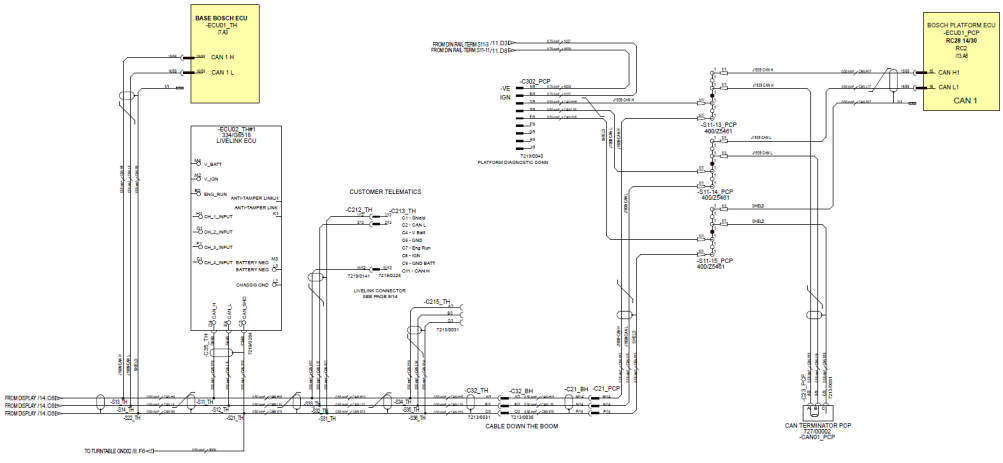

5.1.256 B1303-2F

Error code:	**B1303-2F**
ECU	Platform ECU

© 2026 JCB INDIA LTD

Description:	RC CONFIG Short Circuit Plausibility Check
Component:	ECU
Vehicle reaction:	After ignition: Detect failure mode; Disable all functionality of respective controller; Before ignition: check in startlock logic and control will be stuck in Startlock mode; Detect failure mode.
Possible Cause:	1. Short or Open Circuit on CAN Bus network 2. Water ingress on CAN Bus connector / device 3. Harness damage
Service Action:	1. Check CAN Bus terminators at both ends of CAN Network (Platform and Base Control Panels) 2. Remove one CAN Bus terminator and measure resistance of CAN-H to CAN-L. Should be 120 Ohms. If value is low, check CAN Bus for short circuits, If value is High, Check for open circuits (including interconnects) 3. Check for water ingress, short or open circuits in all connectors of devices attached to CAN Bus. 4. Connect Service Master via diagnostic connector, User CAN diagnostics to check which devices are connected and operating correctly. 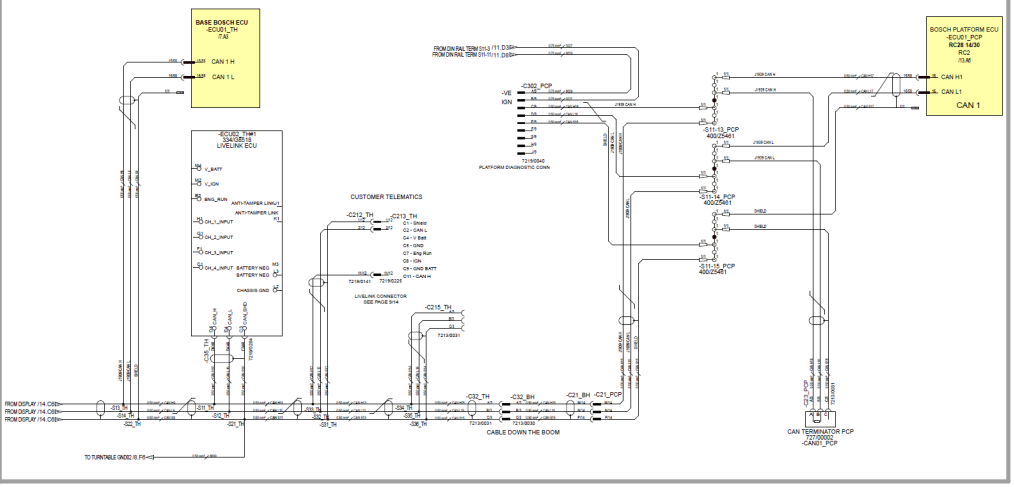

© 2026 JCB INDIA LTD

5.1.257 B1304-24

Error code:	B1304-24
ECU	Platform ECU
Description:	Base ECU - VSS1 Low Voltage (<= 4.5V)
Component:	ECU
Vehicle reaction:	Tx DM1
Possible Cause:	1. Short Circuit 2. Excessive load 3. Water Ingress
Service Action:	1. VSS 1 (+5 V) Voltage at Pin 19/58 on the Base Bosch ECU is equal to or below +4.5V. There is no circuitry attached to this pin. Check Connector for bent pins, debris, water ingress or any other reason a short to ground may exist. If fault remains, change the ECU. 2. Check System voltage 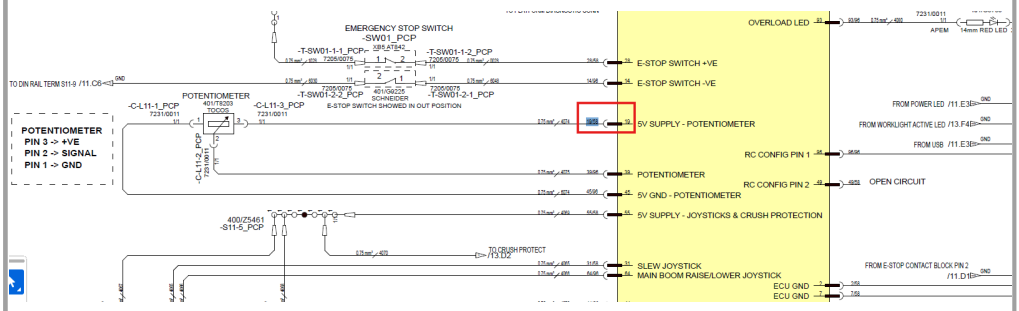

5.1.258 B1305-24

Error code:	B1305-24
ECU	Base ECU
Description:	Base ECU - VSS2 Low Voltage (<= 9.5V)

© 2026 JCB INDIA LTD

Component :	ECU
Vehicle reaction:	Tx DM1
Possible Cause:	1. Short Circuit 2. Excessive load 3. Water Ingress
Service Action:	1. VSS 2 (+10V) Voltage at Pin 32/58 on the Base Bosch ECU is equal to or below +9.5V. There is no circuitry attached to this pin. Check Connector for bent pins, debris, water ingress or any other reason a short to ground may exist. If fault remains, change the ECU. 2. Check System voltage 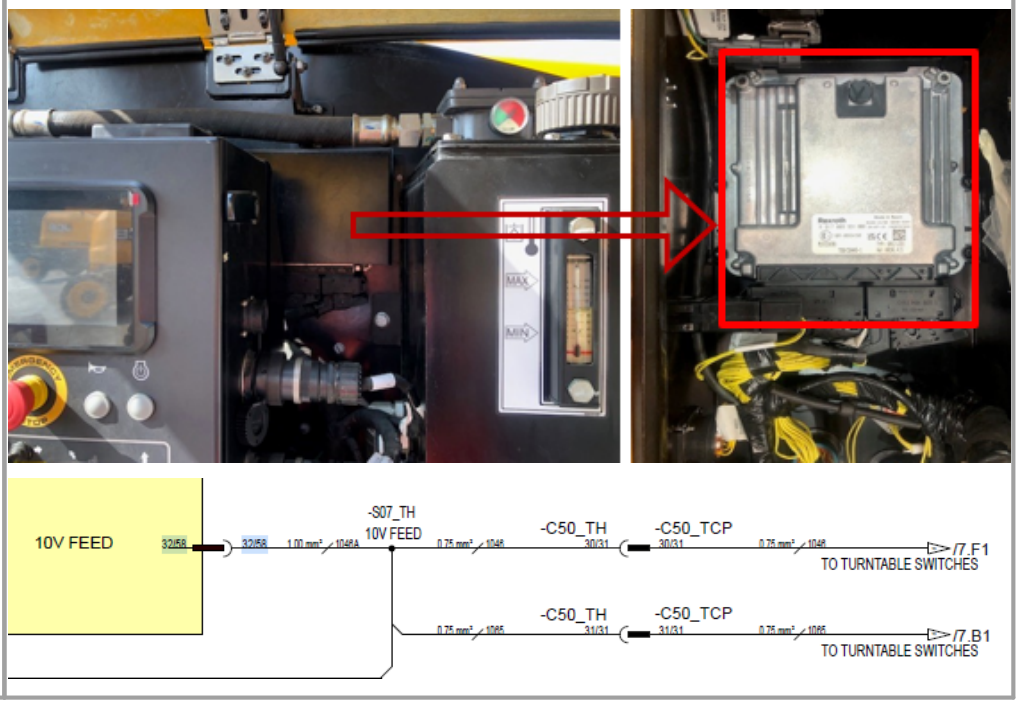

5.1.259 **B1306-24**

Error code:	**B1306-24**
ECU	Base ECU
Description :	Base ECU -

© 2026 JCB INDIA LTD

Component :	ECU
Vehicle reaction:	Tx DM1
Possible Cause:	1. Short Circuit 2. Excessive load 3. Water Ingress
Service Action:	1) VSS 3 (+5 V) Voltage at Pin 55/58 on the Base Bosch ECU is equal to or below +4.5V. There is no circuitry attached to this pin. Check Connector for bent pins, debris, water ingress or any other reason a short to ground may exist. If fault remains, change the ECU. 2) Check System voltage 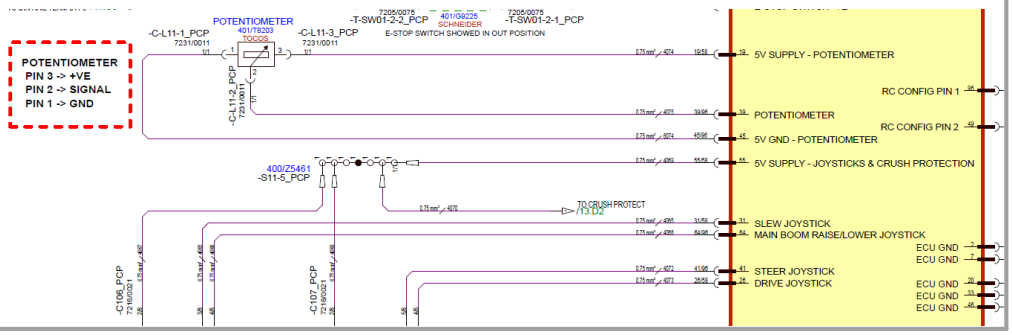

5.1.260 B1307-24

Error code:	**B1307-24**
ECU	Base ECU
Description :	Base Startlock Stuck (Generic o/p fault detected 12V supply low)
Component :	ECU
Vehicle reaction:	Base ECU Software execution terminated. ECU does not run. Machine disabled.
Possible Cause:	1. Short Circuit 2. Low system voltage

© 2026 JCB INDIA LTD

	3. Faulty ECU

Service Action:	Verify System Voltage
	• Check machine battery voltage:
	  ○ Ensure batteries are not flat.
	  ○ Voltage should be within normal operating range (typically 12V or 24V depending on system).
	
	Software & VIN Setup
	• Attempt to flash the latest ECU software.
	• Perform VIN setup after flashing.
	  ○ This ensures proper configuration and communication.
	
	ECU Replacement
	• If the issue persists after flashing and VIN setup, replace the ECU.
	  ○ Ensure new ECU is programmed correctly before installation.
	
	 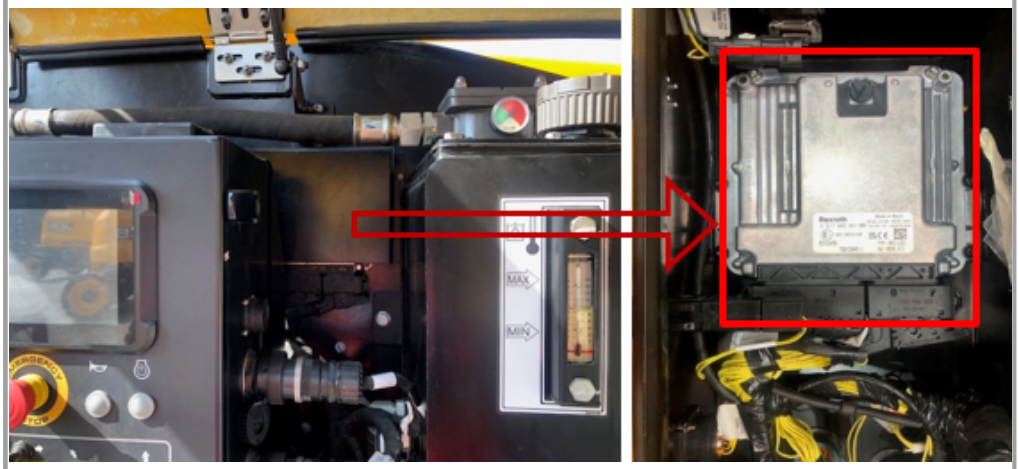
	 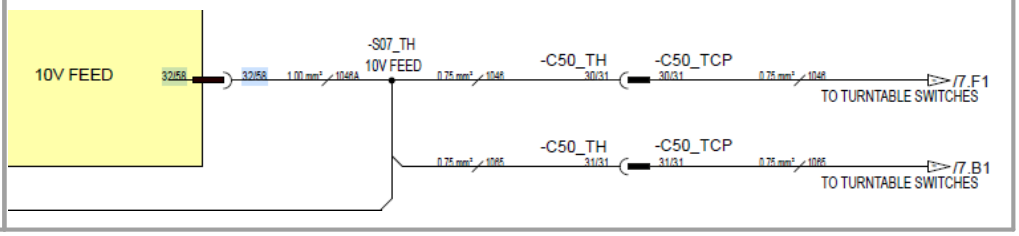

5.1.261 B1308-24

Error code:	**B1308-24**

© 2026 JCB INDIA LTD

ECU	Base ECU
Description:	Base Startlock Stuck (Proportional output short to high)
Component:	ECU
Vehicle reaction:	Base ECU Software execution terminated. ECU does not run. Machine disabled.
Possible Cause:	1. Short Circuit 2. Excessive load 3. Water Ingress
Service Action:	Verify the Fault • Confirm that the short-circuit to high fault is present on proportional outputs (solenoids) from the Base Bosch ECU. Check Fuse • Inspect Fuse_03 at the turntable control panel. • Ensure it has not blown. Replace if necessary. Battery Health • Check the battery condition and ensure all connections are secure. • Low voltage or poor connections can cause false faults. Voltage Supply Verification • Measure voltage supply at the turntable ECU connector: ○ Pins: 1/58, 3/58, 4/58, 5/58, 6/58 • Confirm correct voltage levels. Inspect VP_1 Pins on 96-Way Connector • Potential fault pins on the 96-way connector: 1/96, 2/96, 3/96, 4/96, 5/96, 25/96, 26/96, 27/96, 28/96, 29/96, 30/96, 31/96, 49/96, 50/96, 51/96, 52/96, 53/96, 54/96, 73/96, 74/96, 75/96, 76/96, 77/96, 78/96 • These pins are connected and could be the source of the short.

© 2026 JCB INDIA LTD

	Physical Inspection
	• Disconnect the 96-way connector from the Base Bosch ECU.
	• Check for:
	  ○ Pin damage
	  ○ Debris
	  ○ Water ingress
	
	Turntable Display Diagnostics
	• If voltage supply is okay, check the I/O page on the turntable display.
	• Identify which output is ON (could indicate the shorted circuit).
	
	Voltage Measurement
	• Measure voltage at the pins listed above.
	• Look for unexpected high voltage.
	• Trace the fault back along the wiring path when found.
	
	Software & ECU Replacement
	• Flash the latest software to the ECU.
	• If the problem persists, replace the ECU.
	 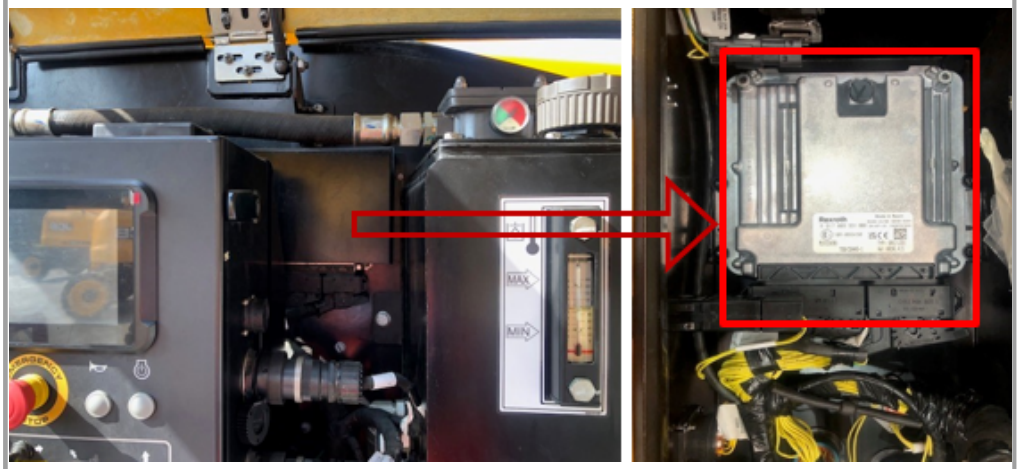

5.1.262 B1309-24

Error code:	B1309-24
ECU	Base ECU

© 2026 JCB INDIA LTD

Description:	Base Startlock Stuck (Proportional output short to high)
Component:	ECU
Vehicle reaction:	Base ECU Software execution terminated. ECU does not run. Machine disabled.
Possible Cause:	1. Short Circuit 2. Excessive load 3. Water Ingress
Service Action:	1) A short-circuit to high fault exists on the proportional outputs (Solenoids) from the Base Bosch ECU. 2) Check Fuse_03 has not blown at the turntable control panel. 3) Check voltage supply up to turntable ECU connector, pins: 1/58, 3/58, 4/58, 5/58, 6/58. 4) The following pins are potential causes: VP_1 (All on 96 way connector) Pins 1/96, 2/96, 3/96, 4/96, 5/96, 25/96, 26/96, 27/96, 28/96, 29/96, 30/96, 31/96, 49/96, 50/96, 51/96, 52/96, 53/96, 54/96, 73/96, 74/96, 75/96, 76/96, 77/96, 78/96 (Only marked pins are connected) 5) Disconnect 96-way connector from Base Bosch ECU and check pins for damage, debris or water ingress. 6) If voltage supply is okay, check I/O page in the turntable display to see which output is on. 7) Measure voltage at the pins shown above, looking for a high voltage. Trace fault back along path when found.

© 2026 JCB INDIA LTD

	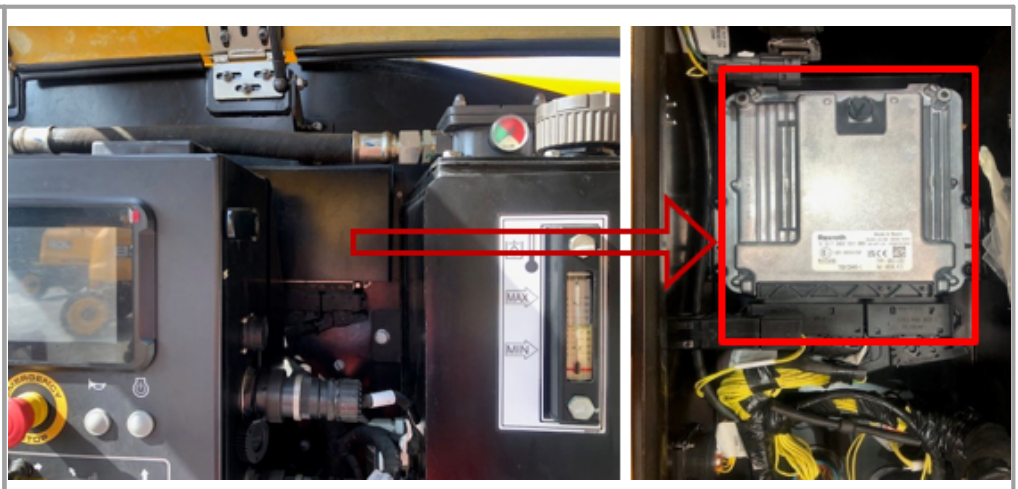

5.1.263 **B1310-24**

Error code:	**B1310-24**
ECU	Base ECU
Description:	Base Startlock Stuck (Base Enable Switch enabled during startup)
Component:	Base ECU
Vehicle reaction:	All Turntable Control Panel controls disabled. Base enable switch must be reset before base controls can be used.
Possible Cause:	Base Enable Switch set to active during start-up
Service Action:	1. The Base Enable switch on the Turntable Control Panel is enabled during startup. 2. Check switch not held active during startup. 3. Check for short circuit at rear of switch. 4. Check voltage at Base Bosch ECU pin 36/96. Pin should be 10V when enabled and less than 3v when disabled. If Switch is unpressed at startup and value is 10V or higher, check Wire #0047 for short to 10V or High. 5. Check function of switch.

© 2026 JCB INDIA LTD

	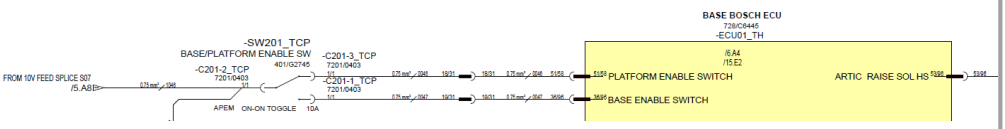

5.1.264 B1311-24

Error code:	B1311-24
ECU	Base ECU
Description:	Base ECU - Turntable ECU Internal hardware monitor 2 fault
Component:	ECU
Vehicle reaction:	Base ECU Software execution terminated. ECU does not run. Machine disabled.
Possible Cause:	1) Internal EVU Fault.
Service Action:	1) Hardware monitor detected fault in internal VSS supplies. Replace ECU 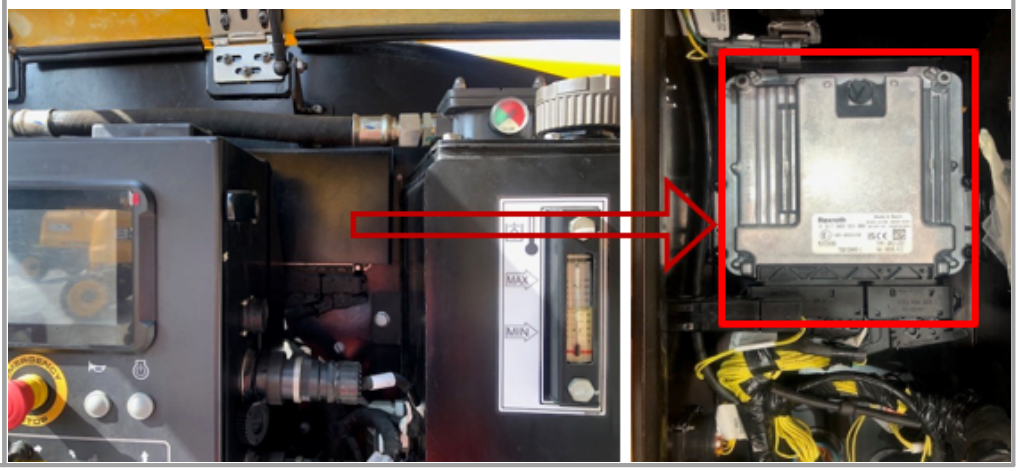

5.1.265 B1312-24

Error code:	B1312-24
ECU	Base ECU
Description:	Base Startlock Stuck (Input enabled during startup)

© 2026 JCB INDIA LTD

Component:	Base ECU
Vehicle reaction:	Incorrectly enabled switch on Turntable Control Panel is disabled. All other functions operate as normal. Switch must be reset before function can operate.
Possible Cause:	Base Input enable at start-up
Service Action:	1) An input to the Base ECU has been enabled during startup. 2) Check no switches physically held on during startup. 3) Check inputs on Display to see which input is held high 4) Visually Check wiring to all switches in base control panel. 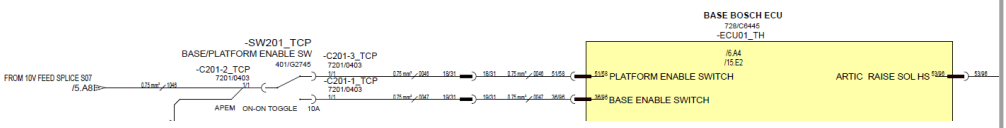

5.1.266 B1313-24

Error code:	**B1313-24**
ECU	Platform ECU
Description:	Base ECU - VSS1 Low Voltage (<= 4.5V)
Component:	ECU
Vehicle reaction:	Tx DM1
Possible Cause:	1. Short Circuit 2. Excessive load 3. Water Ingress
Service Action:	1. VSS 1 (+5 V) Voltage at Pin 19/58 on the Base Bosch ECU is equal to or below +4.5V. There is no circuitry attached to this pin. Check Connector for

© 2026 JCB INDIA LTD

	bent pins, debris, water ingress or any other reason a short to ground may exist. If fault remains, change the ECU. 2. Check System voltage 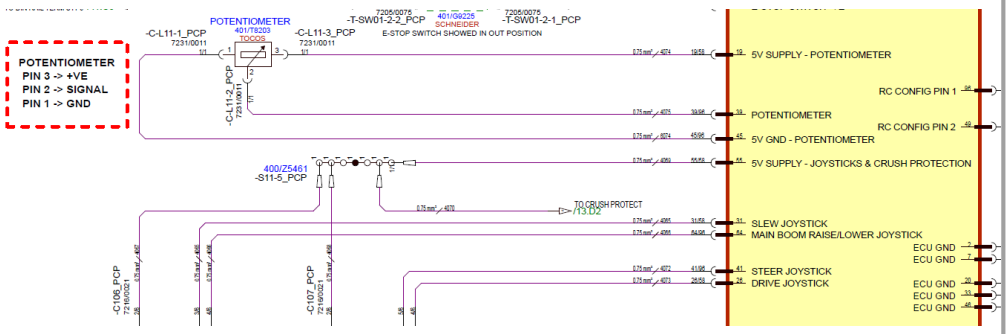

5.1.267 B1314-24

Error code:	B1314-24
ECU	Platform ECU
Description:	Platform Startlock Stuck (Generic output fault)
Component:	Platform ECU
Vehicle reaction:	TxDM1
Possible Cause:	1. Short Circuit 2. Excessive load 3. Water Ingress
Service Action:	1) VSS 2 (+10V) Voltage at Pin 32/58 on the Platform Bosch ECU is equal to or below +9.5V. Voltage can be measured at DIN Rail Terminal -S11-4_PCP. Check other wires coming from this DIN Rail Terminal (#1070, #1076, #1078, #1085, #1086) Try removing these wires one at a time to narrow down fault location.If no fault found, check platform ECU Connector for bent pins, debris, water ingress or any other reason a short to ground may exist. If fault remains, change the ECU. 2) Check System voltage

© 2026 JCB INDIA LTD

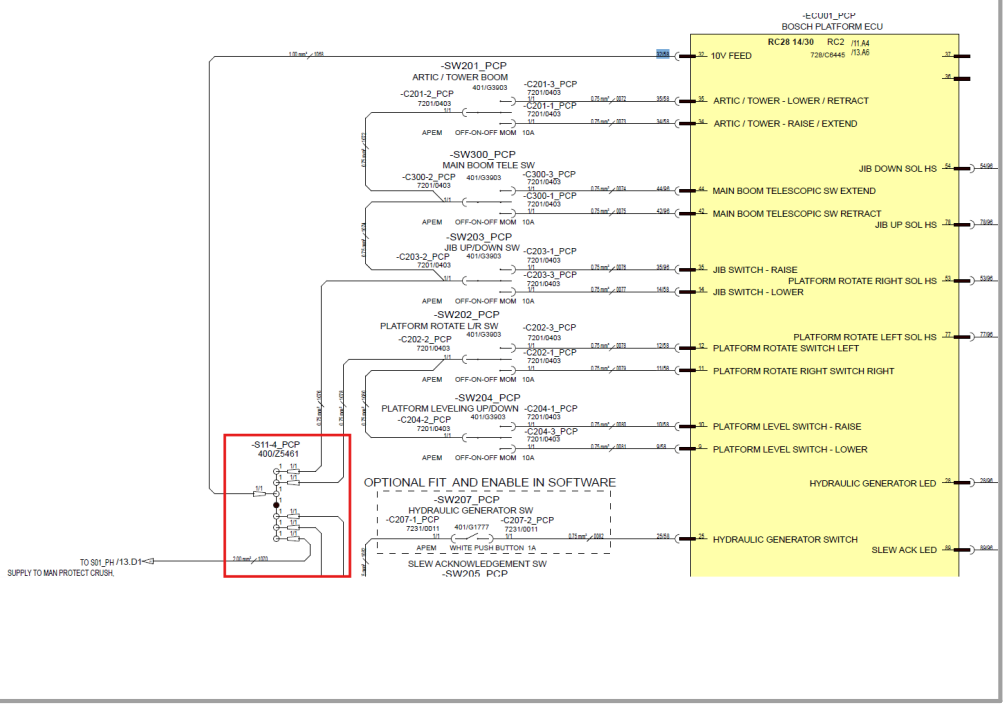

5.1.268 B1315-24

Error code:	B1313-24
ECU	Platform ECU
Description:	Startlock failure - Platform ECU Internal 5v voltage supply (VSS_3) circuit short to low
Component:	ECU
Vehicle reaction:	Platform ECU Software execution terminated. ECU does not run. Machine disabled.
Possible Cause:	1. Short Circuit 2. Excessive load 3. Water Ingress
Service Action:	1. VSS 1 (+5 V) Voltage at Pin 55/58 on the Base Bosch ECU is equal to or below +4.5V. This voltage provides supply to Joysticks and Crush Protection. The voltage can be measured at DIN Rail Terminal -S11-5_PCP (Wire #4069). Check all wires at DIN Rail Terminal (#4067, #4068, #4070). Remove one wire at a time and measure voltage from ECU to see if it raises

© 2026 JCB INDIA LTD

	back to +5V. If no fault found, check platform ECU Connector for bent pins, debris, water ingress or any other reason a short to ground may exist. If fault remains, change the ECU. 2. Check System voltage 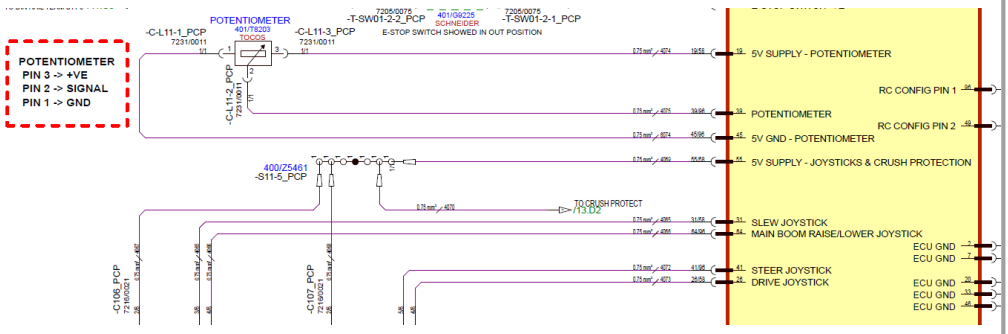

5.1.269 B1316-24

Error code:	B1316-24
ECU	Platform ECU
Description:	Platform Startlock Stuck (Base Startlock Stuck (Generic o/p fault)
Component:	Platform ECU
Vehicle reaction:	Platform ECU Software execution terminated. ECU does not run. Machine disabled.
Possible Cause:	1) Low system voltage 2) Faulty ECU
Service Action:	1) Test system voltage of machine - ensure not flat batteries 2) Replace ECU

© 2026 JCB INDIA LTD

	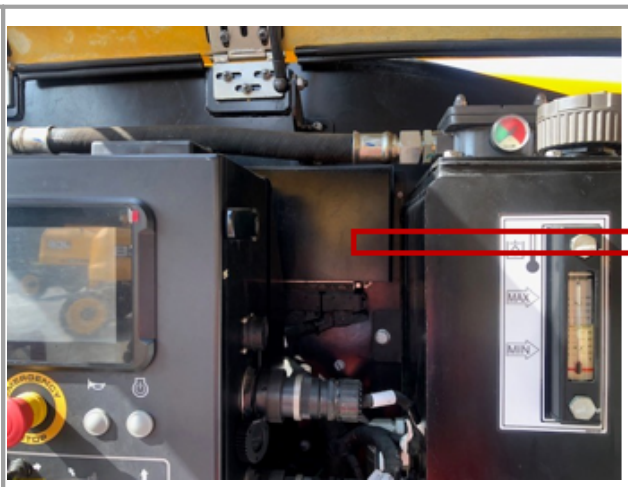 

5.1.270 **B1317-24**

Error code:	**B1317-24**
ECU	Platform ECU
Description:	Platform Startlock Stuck (Proportional output short to high)
Component:	Platform ECU
Vehicle reaction:	Platform ECU Software execution terminated. ECU does not run. Machine disabled.
Possible Cause:	1) Short Circuit to high 2) Water Ingress 3) Faulty ECU
Service Action:	Confirm Fault • A short-circuit to high exists on proportional outputs (solenoids). • This means 12V is back-feeding into ECU outputs, causing unsafe conditions. Check Voltage Supply • At Platform ECU connector (58-way), measure voltage at: ○ Pins: 1/58, 3/58, 4/58, 5/58, 6/58.

© 2026 JCB INDIA LTD

	• Ensure proper supply voltage is present.
	
	Check Fuse
	• Inspect Fuse_06 at the turntable control panel.
	• Confirm it is not blown.
	
	Potential Fault Points
	• VP_1 (96-way connector) – proportional outputs:
	  ○ Pins: 1/96, 2/96, 3/96, 4/96, 5/96, 25/96, 26/96, 27/96, 28/96, 29/96, 30/96, 31/96, 49/96, 50/96, 51/96, 52/96, 53/96, 54/96, 73/96, 74/96, 75/96, 76/96, 77/96, 78/96
	  (Only pin 53 is connected in your case).
	• Check these pins for unexpected high voltage.
	
	Inspect Components
	• Check:
	  ○ Platform Interconnect -C22_PCP pin R.
	  ○ Jib/Platform Rotate Solenoid connector -C03_PH.
	  ○ Solenoid -SOL 22_PH.
	• Look for:
	  ○ Damage.
	  ○ Water ingress.
	  ○ Pushed-back pins.
	
	Disconnect & Inspect
	• Disconnect 96-way connector from Platform Bosch ECU.
	• Inspect pins for:
	  ○ Damage.
	  ○ Debris.
	  ○ Water ingress.
	
	Voltage Measurement
	• Measure voltage at all pins listed above.
	• Identify any high voltage where it shouldn’t be.
	• Trace the fault back along the wiring path to isolate the issue.

© 2026 JCB INDIA LTD



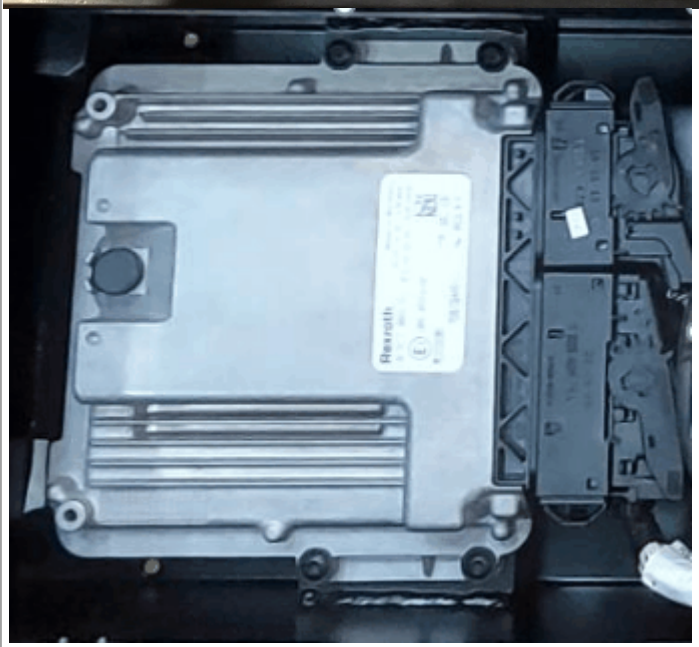

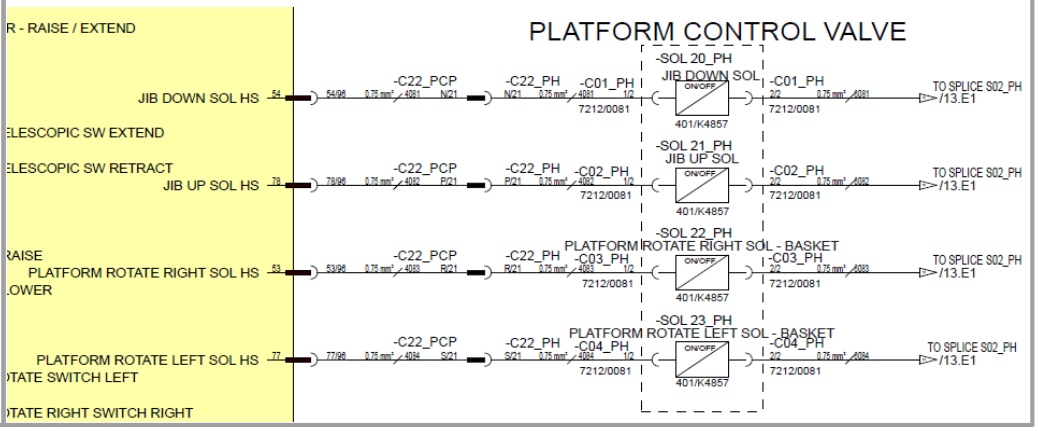

© 2026 JCB INDIA LTD

5.1.271 B1318-24

Error code:	B1318-24
ECU	Platform ECU
Description:	Platform Startlock Stuck (Switched output short to high)
Component:	Platform ECU
Vehicle reaction:	Platform ECU Software execution terminated. ECU does not run. Machine disabled.
Possible Cause:	1) Short Circuit to high 2) Water Ingress 3) Faulty ECU
Service Action:	1) A short-Circuit to high fault exists on the switch outputs. 2) Check Fuse_06 has not blown at the turntable control panel. 3) Check voltage supply up to platform ECU connector, pins: 1/58, 3/58, 4/58, 5/58, 6/58. 4) The following are potential causes: VP_2 (96 way Connector) Pins: 6/96, 7/96, 89/96, 90/96, 93/96, 94/96. (i.e. all switch outputs. The short to high is back feeding the ECU and making unsafe to start up) or (58 way Connector) Pins: 41/58, 41/58, 43/58, 56/58, 57/58 (only Pin 41 connected - Fault LED). Check all connected components for damage or wiring faults. 5) Disconnect 58-way and 96-way connector from Platform Bosch ECU and check pins for damage, debris or water ingress. 6) Measure voltage at the pins shown above, looking for a high voltage. Trace fault back along path when found..

© 2026 JCB INDIA LTD

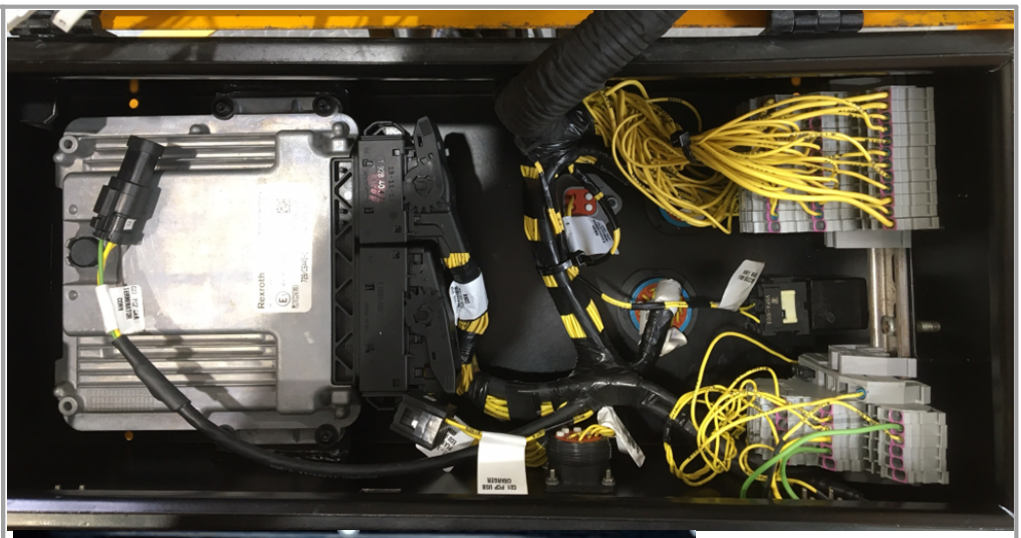

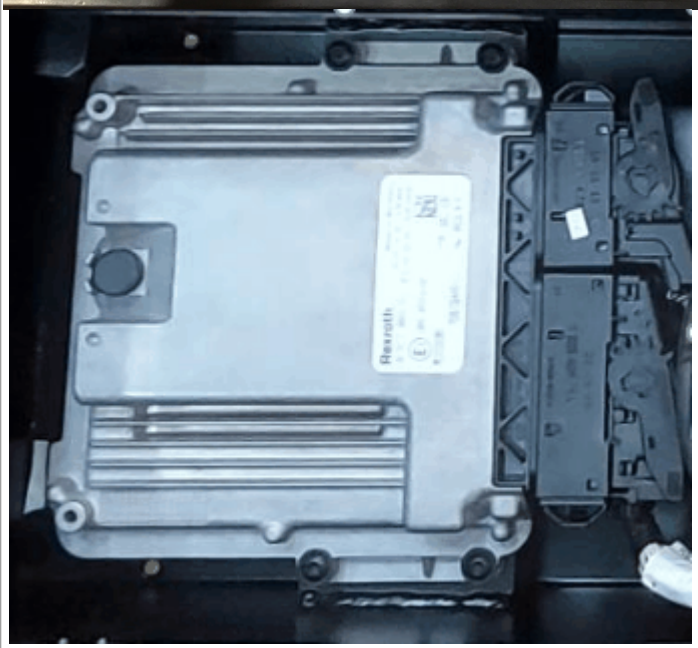

5.1.272 **B1319-24**

Error code:	B1319-24
ECU	Platform ECU
Description:	Platform Startlock Stuck (Foot Switch enabled during start up)
Component:	Platform ECU

© 2026 JCB INDIA LTD

Vehicle reaction:	All Platform Control Panel controls disabled. Foot switch must be reset before platform controls can be used.
Possible Cause:	Base input enabled at startup.
Service Action:	1) The Foot switch at the Platform is pressed during startup. 2) Check switch not held active during startup. 3) Check for short circuit at rear of switch or at Interconnect -C220_FP. Contacts should be closed when switch pressed, Open when switch is not pressed. 4) Check voltage at Platform Bosch ECU pin 47/96. Pin should be 10V when enabled and less than 3v when disabled. If Switch is unpressed at startup and value is 10V or higher, check Wire #4096 for short to 10V or High. 5) Check function of switch. Check for water ingress or damage to Harness.

© 2026 JCB INDIA LTD

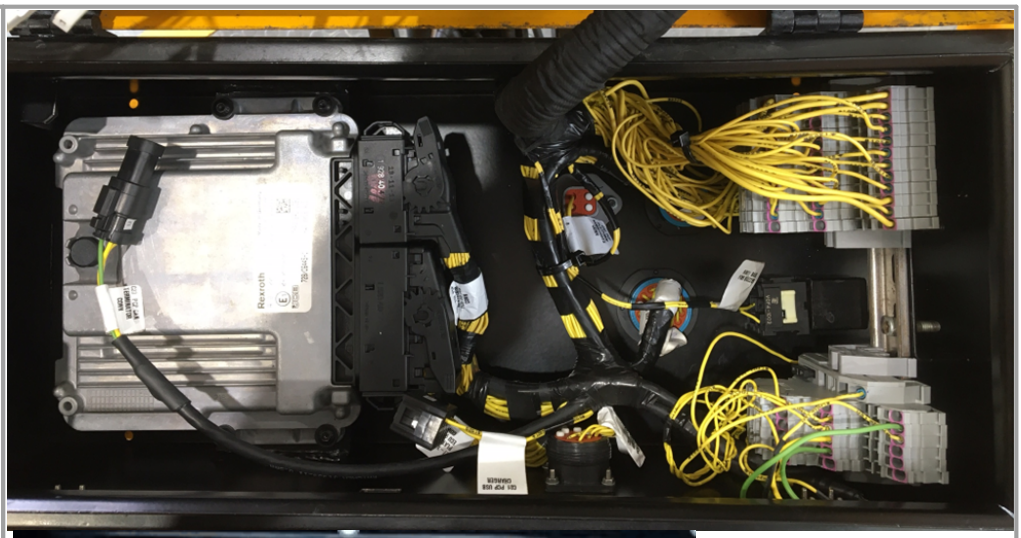

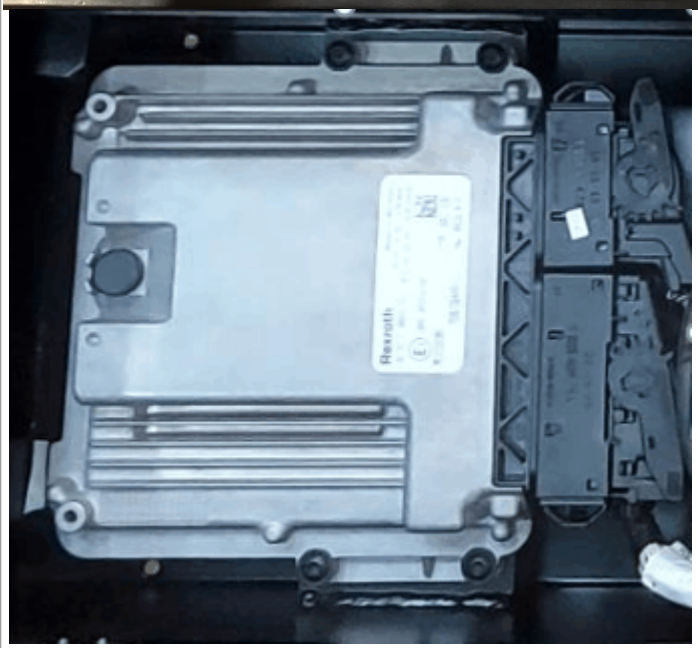

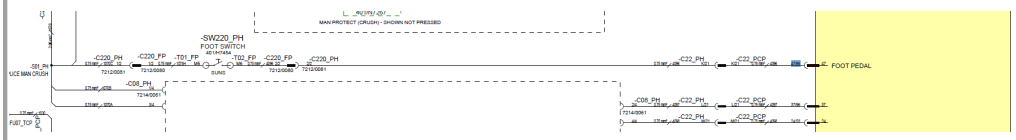

5.1.273 B1320-24

Error code:	B1320-24
ECU	Platform ECU
Description:	Platform Startlock Stuck (Internal ECU fault detected)

© 2026 JCB INDIA LTD

Component:	Platform ECU
Vehicle reaction:	Platform ECU Software execution terminated. ECU does not run. Machine disabled.
Possible Cause:	Internal ECU Fault.
Service Action:	Hardware monitor detected fault in internal VSS supplies. Replace ECU. 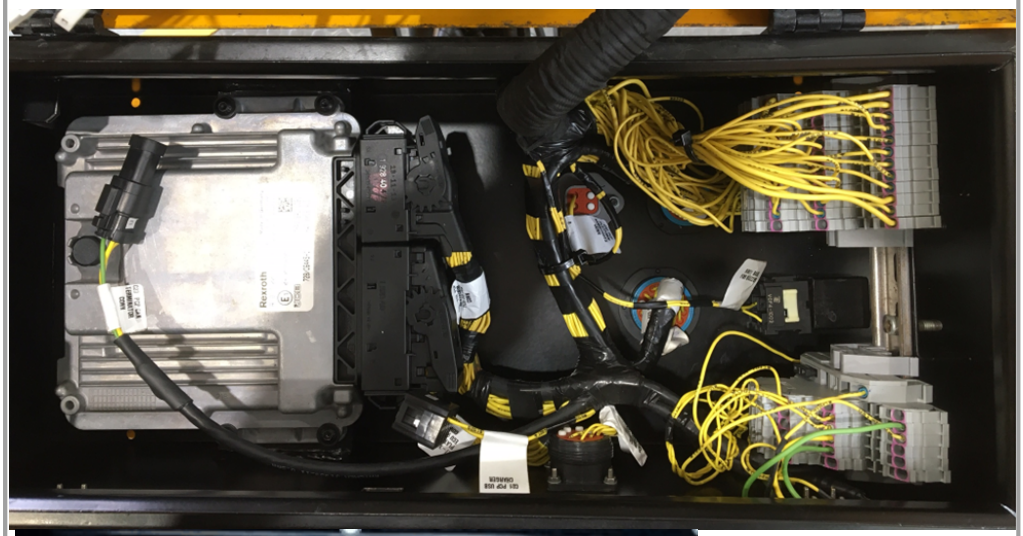 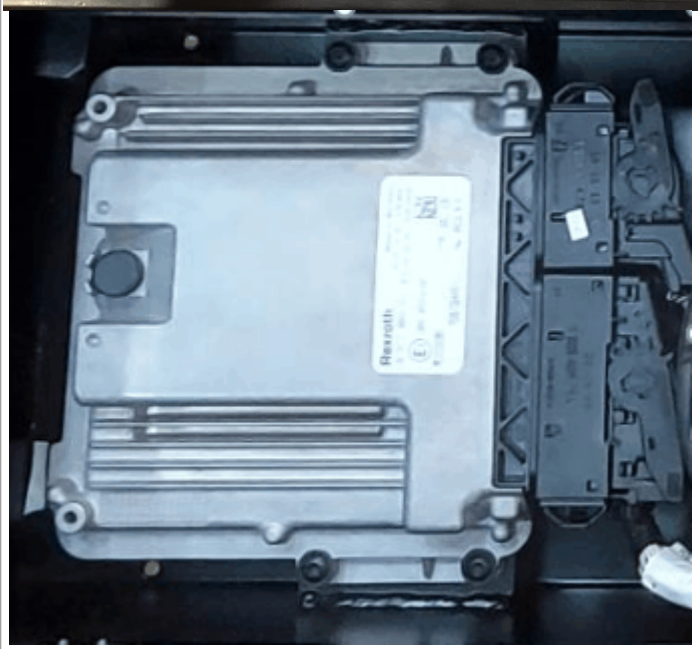

© 2026 JCB INDIA LTD

5.1.274 B1321-24

Error code:	B1321-24
ECU	Platform ECU
Description:	Platform Startlock Stuck (Input enabled during startup)
Component:	Platform ECU
Vehicle reaction:	Incorrectly enabled switch on Platform Control Panel is disabled. All other functions operate as normal. Switch must be reset before function can operate.
Possible Cause:	Base input enabled at startup.
Service Action:	1) An input to the Platform ECU has been enabled during startup. 2) Check no switches physically held on during startup. 3) Check inputs on Display to see which input is held high 4) Visually Check wiring to all switches in base control panel.

© 2026 JCB INDIA LTD

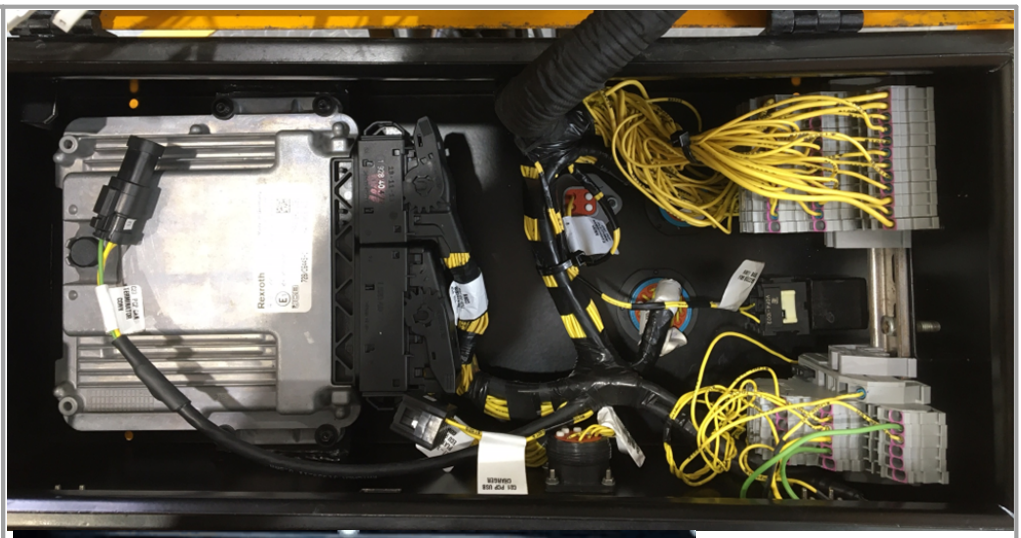

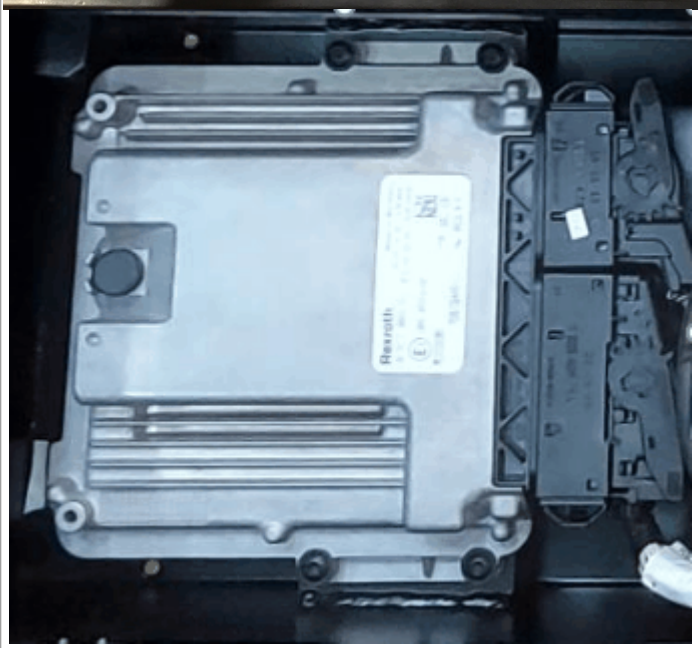

5.1.275 **B1329-13**

Error code:	B1329-13
ECU	Base ECU
Description:	JIB/PLATFORM FLOW High Side Sol Short Circuit to High
Component:	Jib/Platform Solenoid

© 2026 JCB INDIA LTD

Vehicle reaction:	Detect failure mode for Short Circuit to High and disable platform rotate and allow Jib functions Note: Before Ignition ON, POST Fail (stuck in startup logic for Short Circuit to High only) and Generic Disable output fault.
Possible Cause:	1. A short circuit within the wiring harness 2. A short circuit within the harness connectors 3. Water damage/ingress within the harness connectors 4. Damaged component
Service Action:	1. Locate Jib Up / Platform Right solenoid connector -C16_TH. Disconnect connector and measure voltage at pin 1/2. If voltage is high, check harness and Base Bosch ECU Connector terminal 7/96 for short to high. 2. Measure voltage at -C16_TH pin 2/2. If voltage is high, check return path for short to high. 3. Check -C16_TH and Base Bosch ECU Connector for water ingress, damage, debris or stray wires that may cause short circuit. 4. Check for any damage to the harness or components that may cause short circuit. 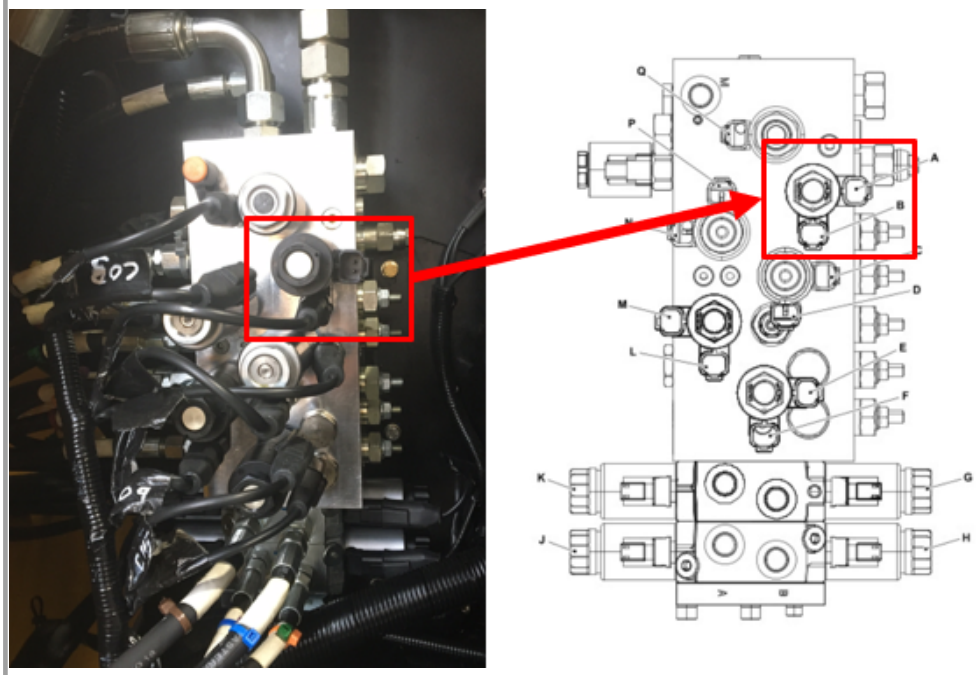

© 2026 JCB INDIA LTD

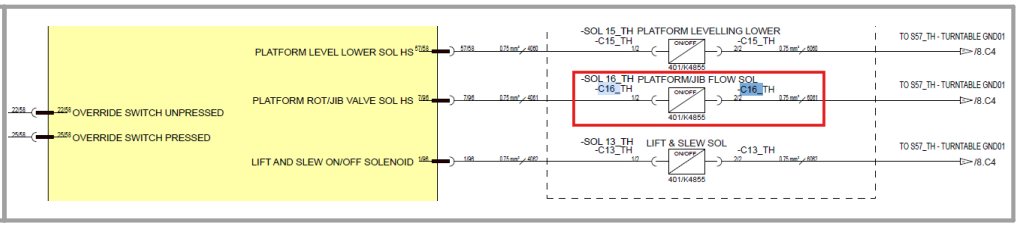

5.1.276 B1330-16

Error code:	B1330-16
ECU	Base ECU
Description:	JIB/PLATFORM FLOW High Side Solenoid Short Circuit to Low
Component:	Jib/Platform Solenoid
Vehicle reaction:	Detect failure mode for Short Circuit to Low and disable platform rotate and allow Jib functions
Possible Cause:	1. A short circuit within the wiring harness 2. A short circuit to the chassis 3. A short circuit within the harness connectors 4. Water damage/ingress within the harness connectors 5. Damaged component
Service Action:	1. Locate Jib Up / Platform Right solenoid connector -C16_TH. Disconnect connector and test pin 1/2 for short to GND. Check harness and Base Bosch ECU Connector terminal 7/96 for short to GND. 2. Test for short to GND at -C16_TH pin 2/2. Check return path for short to GND. 3. Check -C16_TH and Base Bosch ECU Connector for water ingress, damage, debris or stray wires that may cause short circuit. 4. Check for any damage to the harness or components that may cause short circuit.

© 2026 JCB INDIA LTD

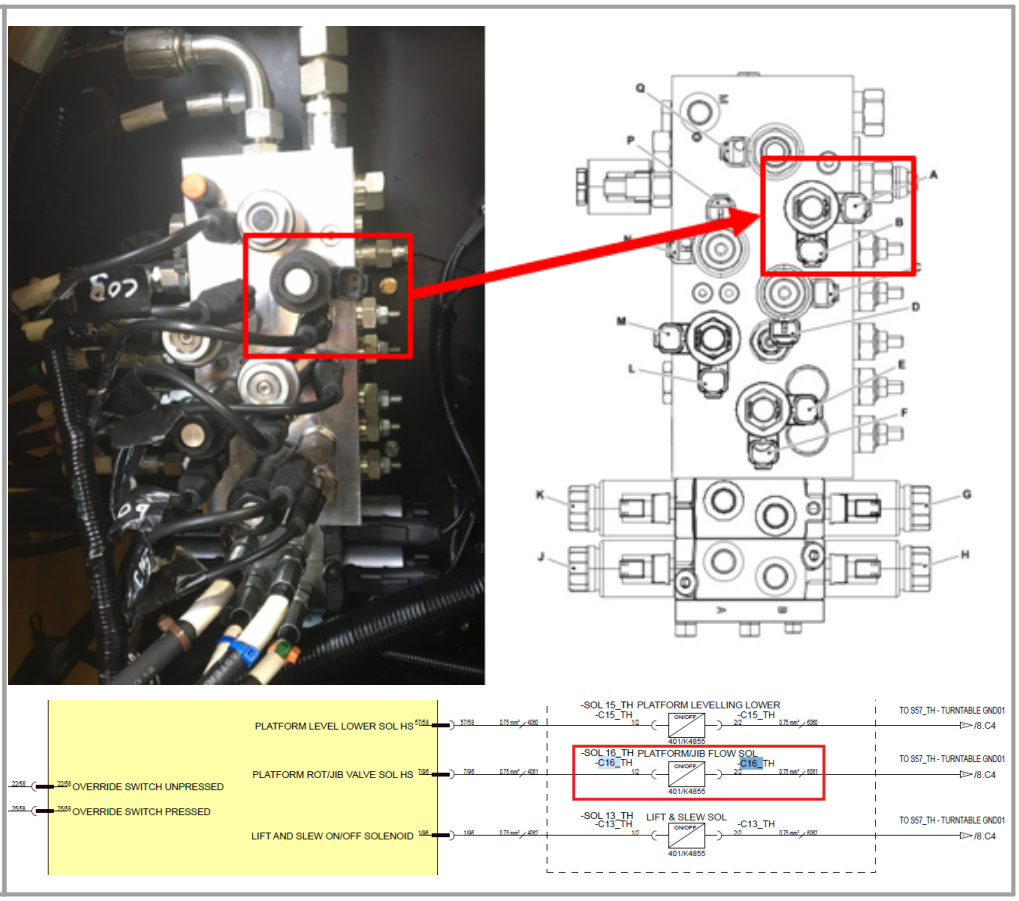

5.1.277 B1331-13

Error code:	B1331-13
ECU	Base
Description:	FORWARD OR REVERSE Proportional Solenoid Valve Fault
Component:	Drive Solenoid
Vehicle reaction:	Detect failure mode with Safe out method - Switch drive output (but not steer) to off (Brake comes ON automatically) Before Ignition ON, POST Fail (stuck in startup logic) and Generic output fault.
Possible Cause:	1. A short circuit within the wiring harness 2. A short circuit within the harness connectors 3. Water damage/ingress within the harness connectors

© 2026 JCB INDIA LTD

	4. Damaged component
Service Action:	1. Check harness from Base Bosch ECU through to Transmission Pump connectors -C18_TH and -C19_TH. Disconnect connectors and test for short circuits with multi-meter. 2. Check condition of connectors at Base Bosch ECU and Transmission pump connectors 3. Check for water ingress at connectors including within ECU mounted connector and Solenoid mounted connectors. 4. Check harness for any visible damage such as abrasions and pinching. 5. Disconnect connector -C18_TH and -C19_TH from the Pump coil . Measure resistance from Terminal to GND. If a short exists, check wire #4064, 4065, 6064,6065,6066 to Base Bosch ECU pin 52/96, 76/96, 86/96. 6. Check Wire #4064 and 4065 is not shorted to GND / Chassis. Check for abrasions and pinching. 7. Check condition of pins in Base Bosch ECU. Check for Bent pins, debris or stray wires causing a short. 8. Check for water ingress in the Base Bosch ECU Connectors. 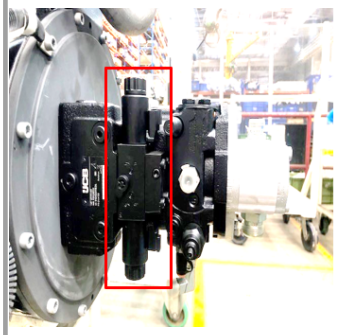 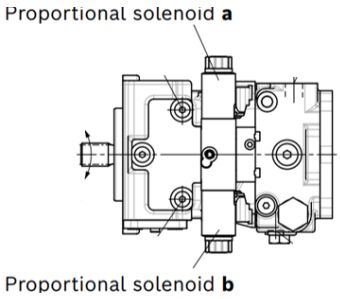 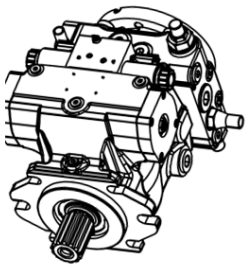 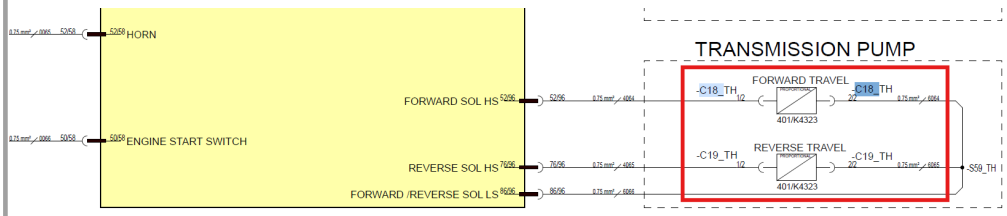

© 2026 JCB INDIA LTD

5.1.278 B1332-17

Error code:	B1332-17
ECU	Base ECU
Description:	PUBLIC Proportional Solenoid Valve Low Side Short Circuit to High
Component:	PUBLIC Proportional Solenoid Valve
Vehicle reaction:	Public proportional solenoid will be switched off, this will effect:Articulated boom, steer, leveling, jib, platform rotate, telescopic boom.
Possible Cause:	1. Poor connection 2. Break in wiring 3. Water in connector 4. Broken pin or connector 5. Damage solenoid
Service Action:	1. Check resistance of the coil 5-10 ohms 2. Check wiring from ecu to the coil 3. Turn machine ignition on/off to clear code 4. Check wire on solenoid connector C11_TH Pin 1 and 2. 5. Check wire no. 4047 and 4058 for any loose connection, cut or any damage. 6. Check if valve is mechanically jammed 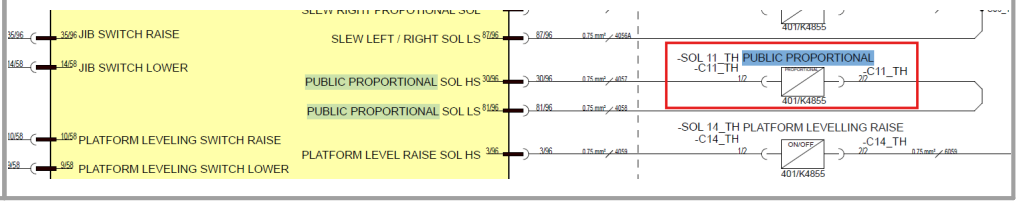

5.1.279 B1333-16

Error code:	B1333-16
ECU	Base ECU

© 2026 JCB INDIA LTD

Description:	PUBLIC Proportional Solenoid Valve Low Side Short Circuit to Low
Component:	PUBLIC Proportional Solenoid Valve
Vehicle reaction:	Public proportional solenoid will be switched off, this will effect:Articulated boom, steer, leveling, jib, platform rotate, telescopic boom.
Possible Cause:	1. Poor connection 2. Break in wiring 3. Water in connector 4. Broken pin or connector 5. Damage solenoid
Service Action:	1. Check resistance of the coil 5-10 ohms 2. Check wiring from ecu to the coil 3. Turn machine ignition on/off to clear code 4. Check wire on solenoid connector C11_TH Pin 1 and 2. 5. Check wire no. 4047 and 4058 for any loose connection, cut or any damage. 6. Check if valve is mechanically jammed 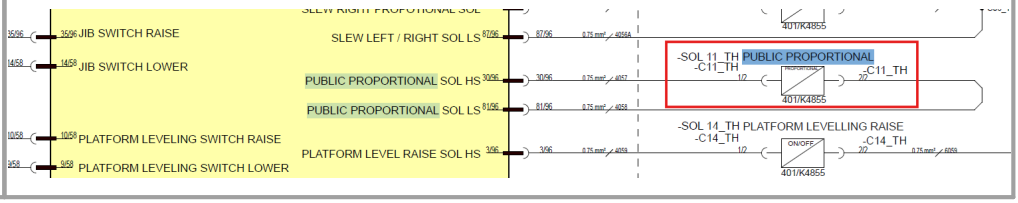

5.1.280 B1334-13

Error code:	**B1334-13**
ECU	Base ECU
Description:	PUBLIC Proportional Solenoid Valve Fault
Component:	PUBLIC Proportional Solenoid Valve

© 2026 JCB INDIA LTD

Vehicle reaction:	Detect failure mode with Safout method - Switch Public Prop. output (related to all switch functions) to off
Possible Cause:	1. Poor connection 2. Break in wiring 3. Water in connector 4. Broken pin or connector 5. Damage solenoid
Service Action:	1. Check resistance of the coil 5-10 ohms 2. Check wiring from ECU to the coil 3. Turn machine ignition on/off to clear code 4. Check wire on solenoid connector C11_TH Pin 1 and 2. 5. Check wire no. 4047 and 4058 for any loose connection, cut or any damage. 6. Check if valve is mechanically jammed 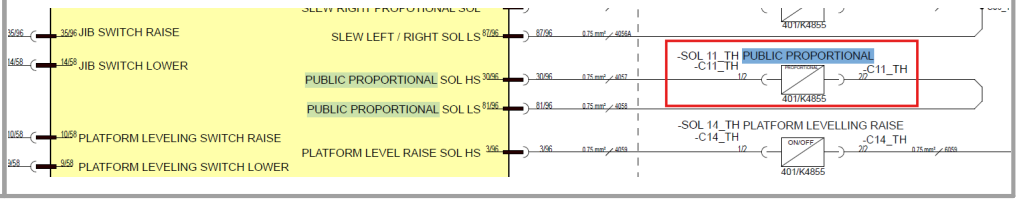

5.1.281 B1335-17

Error code:	**B1335-17**
ECU	Base ECU
Description:	Main Boom - Main Boom Solenoid Valve Low Side Short Circuit to High.
Component:	Main Boom Solenoid
Vehicle reaction:	Detect failure mode with Safout method - Switch Main Boom output to off Before Ignition ON, POST Fail (stuck in start up logic) and Generic output fault

© 2026 JCB INDIA LTD

Possible Cause:	1. A short circuit within the wiring harness 2. A short circuit within the harness connectors 3. Water damage/ingress within the harness connectors 4. Damaged component

Service Action:	Verify ECU Terminal Voltage
	• Measure voltage at Bosch ECU terminal 84/96.
	• If it shows short circuit to high (12V), proceed to the next steps.
	
	Isolate Main Boom Lower Solenoid
	• Locate and disconnect Main Boom Lower Solenoid Connector – C06_TH.
	• Measure voltage at Pin 2/2 of C06_TH.
	  ○ If High, continue to Step 3.
	
	Isolate Main Boom Raise Solenoid
	• Disconnect Main Boom Raise Connector – C05_TH.
	• Measure voltage again at C06_TH Pin 2/2.
	  ○ If voltage remains high, inspect return path back to ECU terminal 84/96 (Wire #4047A).
	  ○ If voltage drops when either connector is removed, check high side wiring back to ECU (Wires #4045 and #4046).
	
	Harness & Connector Inspection
	• Inspect harness for:
	  ○ Faults, abrasions, pinching that could cause short circuits.
	• Check all connectors for:
	  ○ Water ingress
	  ○ Damage
	  ○ Stray wires causing shorts
	• Inspect solenoid connectors for physical damage.

© 2026 JCB INDIA LTD

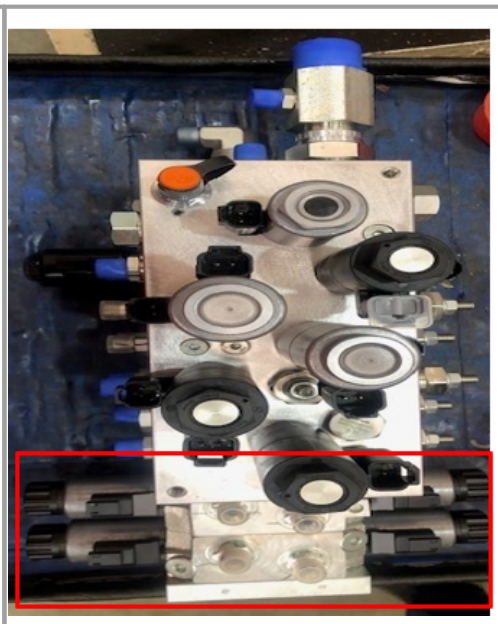

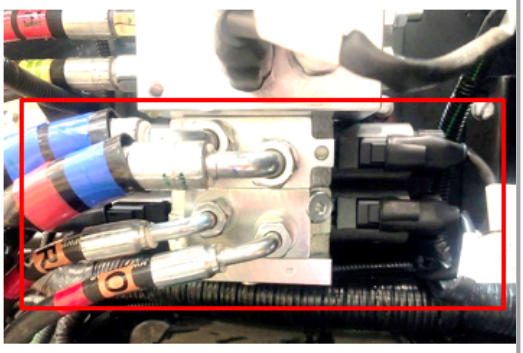

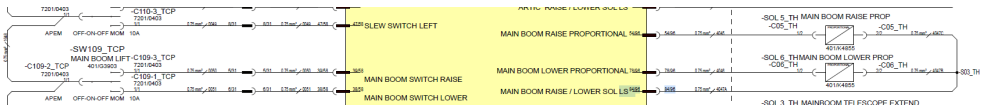

5.1.282 B1336-16

Error code:	B1336-16
ECU	Base ECU
Description:	MAIN BOOM RAISE OR LOWER PROPORTIONAL Solenoid Valve Low Side Short Circuit to Low
Component:	MAIN BOOM RAISE OR LOWER PROPORTIONAL Solenoid Valve
Vehicle reaction:	Disable main-boom raise and lower outputs
Possible Cause:	1. Poor connection 2. Break in wiring 3. Water in connector 4. Broken pin or connector 5. Damage solenoid
Service Action:	1. Check resistance of the coil 5-10 ohms

© 2026 JCB INDIA LTD

	2. Check wiring from coil to ECU wire 4045,4046 & 4047A, 4047B, 4047C for cut, pinch or and damage. 3. Check ECU Pin 54/96, 78/96, 84/96 for bend or back out or any damage. 4. Check solenoid connector C05_TH and C06_TH for loose connection or any damage. 5. Check if valve is mechanically jammed 6. Turn machine ignition on/off to clear code. 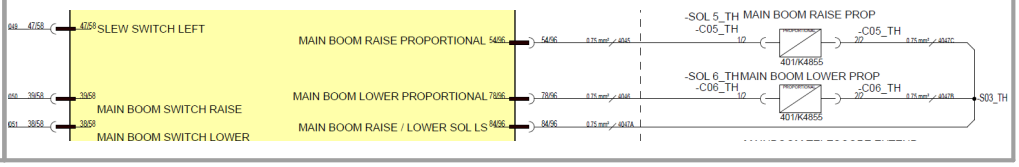

5.1.283 B1337-13

Error code:	B1337-13
ECU	Base ECU
Description:	Main Boom - Main Boom Solenoid Valve Low Side Open Circuit.
Component:	Main Boom Solenoid
Vehicle reaction:	Detect failure mode with Safout method - Switch Main Boom output to off
Possible Cause:	1. A poor connection or damaged terminal within the connector(s) 2. A damaged or broken wire within the wiring harness 3. Component is damaged
Service Action:	1. Locate Main Boom Raise/Lower Solenoid Connectors -C05_TH and -C06_TH. Ensure both connectors are fully seated. 2. Check wiring and terminations at both connectors 3. Check continuity from both connectors pin 2/2 back to the Base Bosch ECU terminal 84/96. 4. Check ECU terminal is not backed out or damaged.

© 2026 JCB INDIA LTD

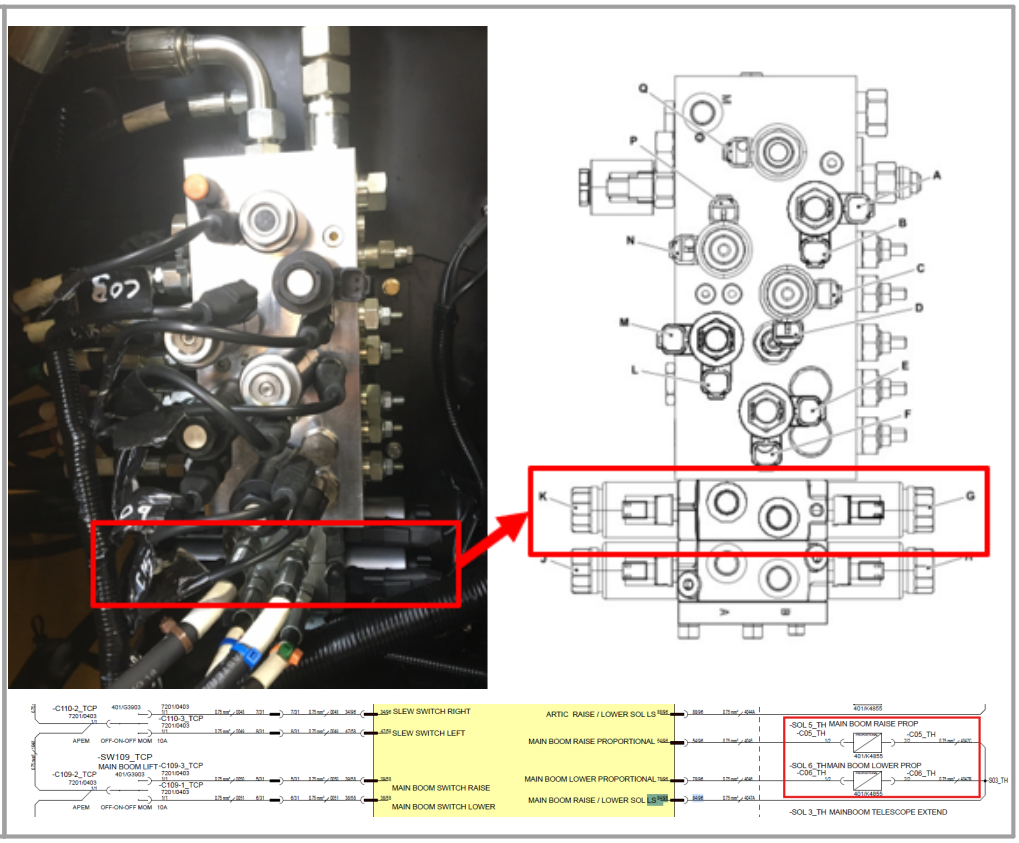

5.1.284 B1338-17

Error code:	B1338-17
ECU	Base ECU
Description:	Slew - Slew Solenoid Value Low Side Short Circuit to High
Component:	Slew Solenoid
Vehicle reaction:	Detect failure mode with Safout method - Switch Slew output to off Note: Before Ignition ON, POST Fail (stuck in start up logic) and Generic output fault
Possible Cause:	1. A short circuit within the wiring harness 2. A short circuit within the harness connectors 3. Water damage/ingress within the harness connectors 4. Damaged component

© 2026 JCB INDIA LTD

Service Action:	ECU Voltage Check
	• Confirm Bosch ECU terminal 87/96 is showing short circuit to high (12V).
	• If yes, proceed with isolation steps.
	
	Isolate Slew Right Solenoid
	• Disconnect Slew Right Solenoid Connector – C08_TH.
	• Measure voltage at Pin 2/2 of C08_TH.
	  ○ If High, continue to Step 3.
	
	Isolate Slew Left Solenoid
	• Disconnect Slew Left Connector – C07_TH.
	• Measure voltage again at C08_TH Pin 2/2.
	  ○ If voltage remains high, inspect return path back to ECU terminal 87/96 (Wire #4056A).
	  ○ If voltage drops when either connector is removed, check high side wiring back to ECU (Wires #4054 and #4055).
	
	Harness & Connector Inspection
	• Inspect harness for:
	  ○ Abrasion
	  ○ Pinching
	  ○ Cuts or exposed conductors
	• Check connectors for:
	  ○ Water ingress
	  ○ Short circuits
	  ○ Bent or backed-out pins
	  ○ Stray wires causing shorts
	
	Solenoid & Valve Check
	• Inspect solenoid connector for physical damage.
	• Verify if the valve is mechanically jammed:
	  ○ Remove and check for debris or obstruction.
	  ○ Ensure smooth movement.

© 2026 JCB INDIA LTD

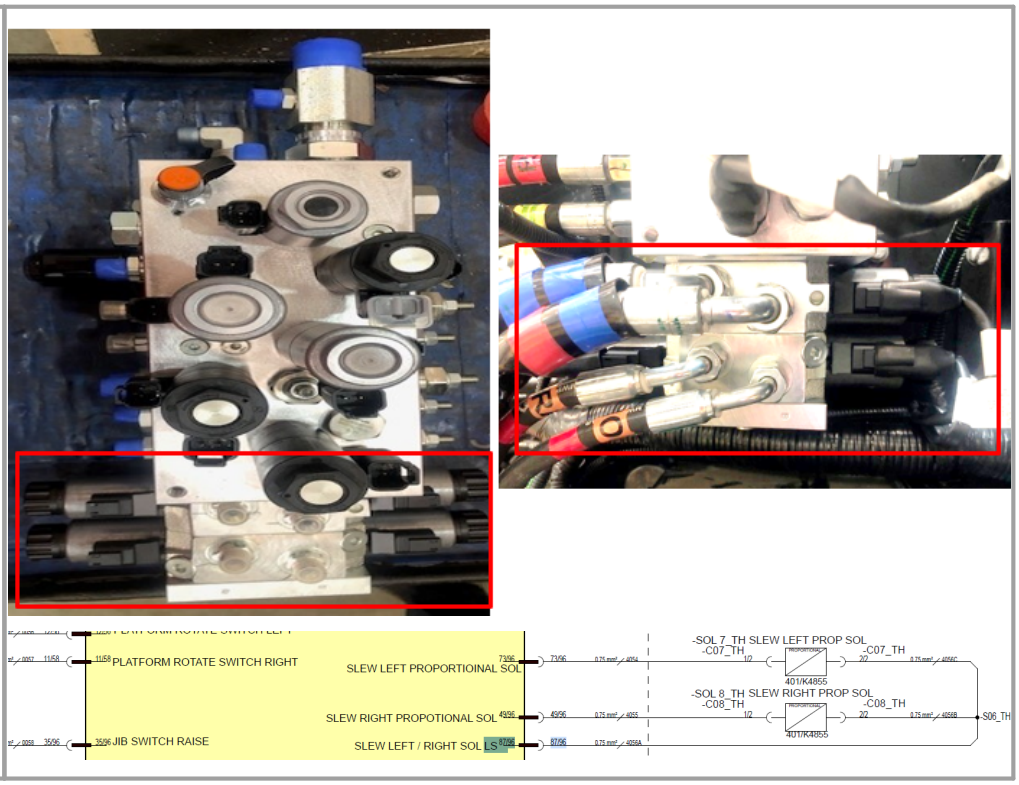

5.1.285 B1339-16

Error code:	B1339-16
ECU	Base ECU
Description:	Slew - Slew Solenoid Value Low Side Short Circuit to Low.
Component:	Slew Solenoid
Vehicle reaction:	Detect failure mode with Safout method - Switch Slew output to off
Possible Cause:	1. A short circuit within the wiring harness 2. A short circuit to the chassis 3. A short circuit within the harness connectors 4. Water damage/ingress within the harness connectors 5. Damaged component
Service Action:	1. Base Bosch ECU terminal 87/96 measuring short circuit to GND. Locate and disconnect Slew Right Solenoid Connector -C08_TH and measure

© 2026 JCB INDIA LTD

	resistance at Pin 2/2 to GND. if short circuit, Locate and disconnect the Slew Left Connector -C07_TH and measure resistance again at -C08_TH Pin 2/2. If short remains, inspect return path back to ECU terminal 87/96 (Wire #4056A). If short to GND disappears when either connector is removed, then check the high side to the solenoid connectors back to the ECU (Wires #4054 and #4055). 2. Check the harness for any faults, abrasions or pinching that may cause short circuit. 3. Check all connectors (above) for any water ingress, short circuits, damage or stray wires that may cause a short. 4. Check solenoid connector for any damage. 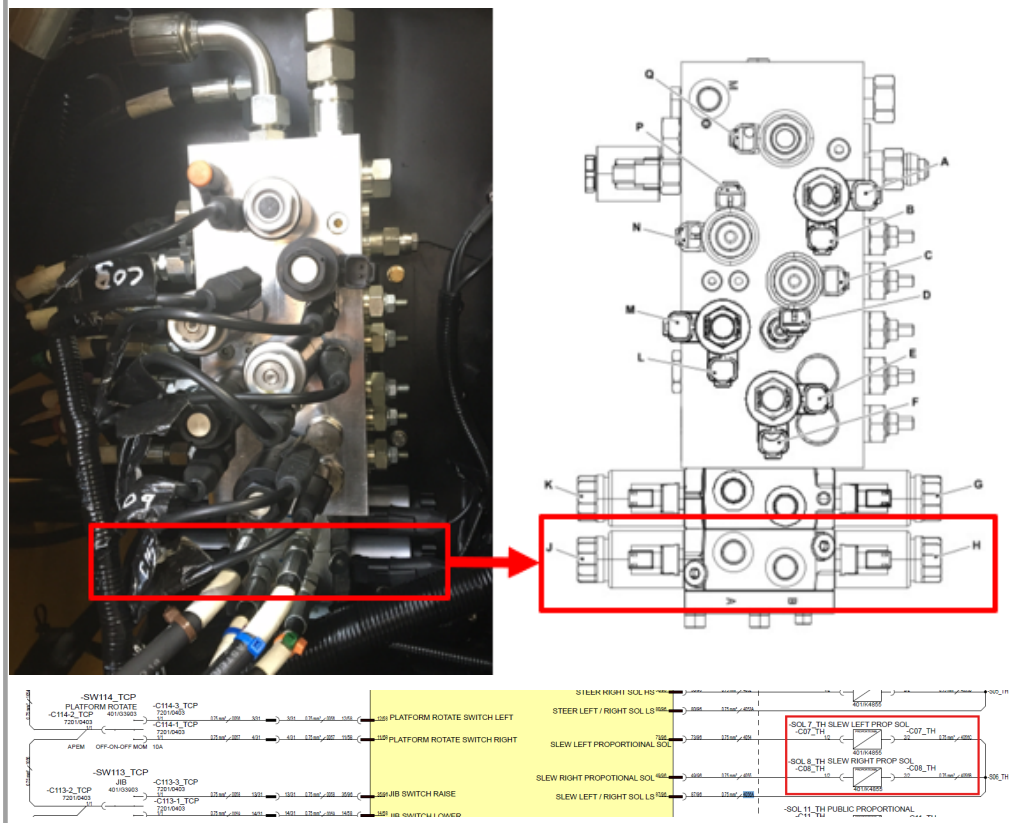

5.1.286 B1340-13

Error code:	B1340-13
ECU	Base ECU

© 2026 JCB INDIA LTD

Description :	Slew - Slew Solenoid Value Low Side Open Circuit.
Component :	Slew Solenoid
Vehicle reaction:	Detect failure mode with Safout method - Switch Slew output to off
Possible Cause:	1. A poor connection or damaged terminal within the connector(s) 2. A damaged or broken wire within the wiring harness 3. Component is damaged
Service Action:	1. Locate Slew Left/Right Solenoid Connectors -C07_TH and -C08_TH. Ensure both connectors are fully seated. 2. Check wiring and terminations at both connectors 3. Check continuity from both connectors pin 2/2 back to the Base Bosch ECU terminal 87/96. 4. Check ECU terminal is not backed out or damaged. 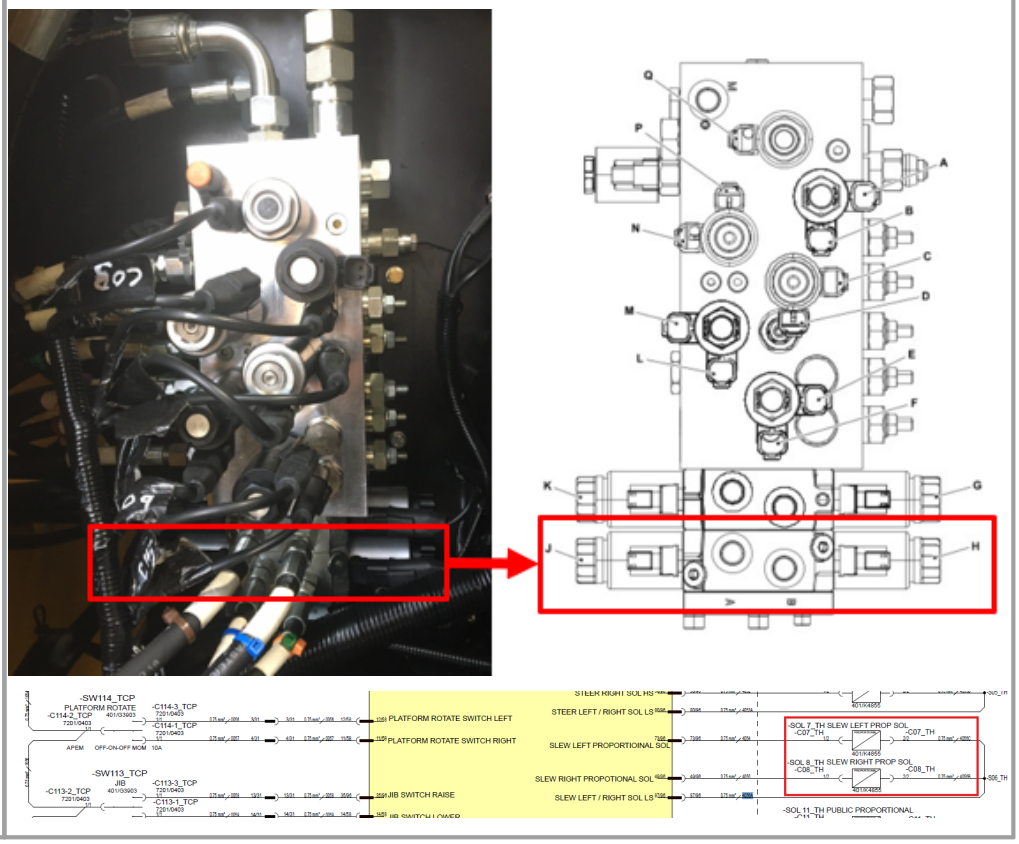

© 2026 JCB INDIA LTD

5.1.287 B1341-17

Error code:	B1341-17
ECU	Base ECU
Description:	MAIN BOOM EXTEND OR RETRACT DIRECTIONAL Solenoid Valve Low Side Short Circuit to High
Component:	MAIN BOOM EXTEND OR RETRACT DIRECTIONAL Solenoid Valve
Vehicle reaction:	Detect failure mode with Safout method - Switch this output to off Before Ignition ON, POST Fail (stuck in startup logic) and Generic output fault
Possible Cause:	1. A short circuit within the wiring harness 2. A short circuit within the harness connectors 3. Water damage/ingress within the harness connectors 4. Damaged component
Service Action:	1. Check wiring between ECU and solenoid for voltage greater than 10.5 volts. 2. Check for continuity to ground. 3. Check wiring from coil to ECU wire 4048,4049 & 4050A, 4050B, 4050C for cut, pinch or and damage. 4. Check ECU Pin 73/96, 49/96, 87/96 for bend or back out or any damage. 5. Check solenoid connector C04_TH and C03_TH for loose connection or any damage. 6. Check if valve is mechanically jammed 7. Turn machine ignition on/off to clear code.

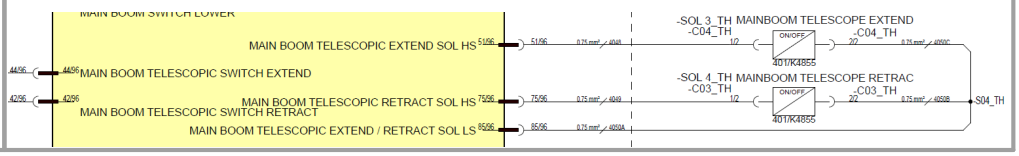

5.1.288 B1342-16

Error code:	B1342-16

© 2026 JCB INDIA LTD

ECU	Base ECU
Description :	MAIN BOOM EXTEND OR RETRACT DIRECTIONAL Solenoid Valve Low Side Short Circuit to Low
Component :	MAIN BOOM EXTEND OR RETRACT DIRECTIONAL Solenoid Valve
Vehicle reaction:	Detect failure mode with Safout method - Switch this output to off Before Ignition ON, POST Fail (stuck in startup logic) and Generic output fault
Possible Cause:	1. A short circuit within the wiring harness 2. A short circuit within the harness connectors 3. Water damage/ingress within the harness connectors 4. Damaged component
Service Action:	1. Check wiring between ECU and solenoid for voltage greater than 10.5 volts. 2. check for continuity to ground. 3. Check wiring from coil to ECU wire 4048,4049 & 4050A, 4050B, 4050C for cut, pinch or and damage. 4. Check ECU Pin 73/96, 49/96, 87/96 for bend or back out or any damage. 5. Check solenoid connector C04_TH and C03_TH for loose connection or any damage. 6. Check if valve is mechanically jammed 7. Turn machine ignition on/off to clear code.

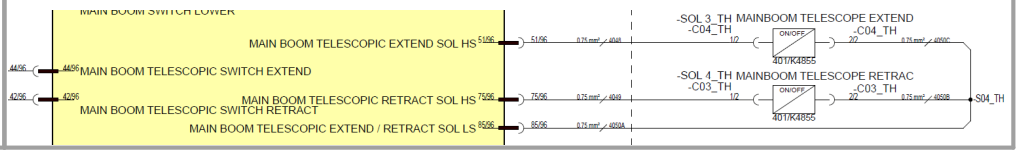

5.1.289 B1344-17

Error code:	**B1344-17**
ECU	Base ECU

© 2026 JCB INDIA LTD

Description:	STEER RIGHT OR LEFT DIRECTIONAL Solenoid Valve Low Side Short Circuit to High
Component:	STEER RIGHT OR LEFT DIRECTIONAL Solenoid Valve
Vehicle reaction:	Detect failure mode with Safout method - Switch Steer output to off
Possible Cause:	1. Poor or loose connection 2. Break in wiring 3. Water in connector 4. Broken pin or connector 5. Faulty or Damage solenoid
Service Action:	1.Check coil resistance 5-10 ohms 2. Check wiring from coil to ECU wire 4051,4052 & 4053A, 4053B, 4053C for cut, pinch or and damage. 3. Check ECU Pin 74/96, 50/96, 80/96 for bend or back out or any damage. 4. Check solenoid connector C09_TH and C10_TH for loose connection or any damage. 5. Check if valve is mechanically jammed. 6 Turn ignition on off to clear code. 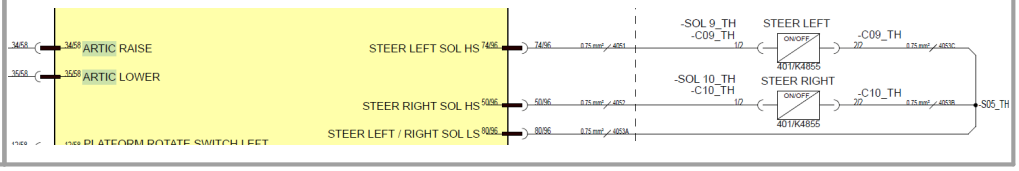

5.1.290 B1345-16

Error code:	**B1345-16**
ECU	Base ECU
Description:	STEER RIGHT OR LEFT DIRECTIONAL Solenoid Valve Low Side Short Circuit to Low

© 2026 JCB INDIA LTD

Component :	STEER RIGHT OR LEFT DIRECTIONAL Solenoid Valve
Vehicle reaction:	Detect failure mode with Safout method - Switch Steer output to off
Possible Cause:	1. Poor or loose connection 2. Break in wiring 3. Water in connector 4. Broken pin or connector 5. Faulty or Damage solenoid
Service Action:	1.Check coil resistance 5-10 ohms 2. Check wiring from coil to ECU wire 4051,4052 & 4053A, 4053B, 4053C for cut, pinch or and damage. 3. Check ECU Pin 74/96, 50/96, 80/96 for bend or back out or any damage. 4. Check solenoid connector C09_TH and C10_TH for loose connection or any damage. 5. Check if valve is mechanically jammed. 6 Turn ignition on off to clear code. 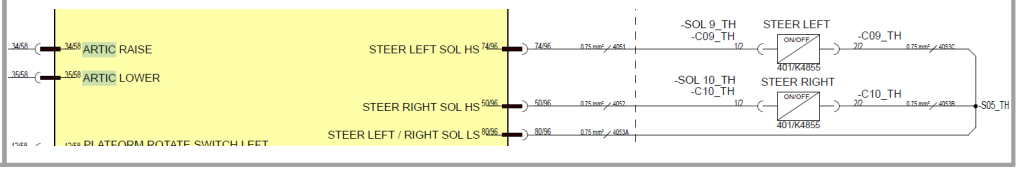

5.1.291 B1347-17

Error code:	**B1347-17**
ECU	Base ECU
Description :	Oscillation Axle - Oscillating Axle Solenoid Value Low Side Short Circuit to High.
Component :	Oscillating Axle Solenoid

© 2026 JCB INDIA LTD

Vehicle reaction:	Detect failure mode with Safout method - Switch Axle Lock output to off; Before Ignition ON, POST Fail (stuck in startup logic) and Generic output fault
Possible Cause:	1. A short circuit within the wiring harness 2. A short circuit within the harness connectors 3. Water damage/ingress within the harness connectors 4. Damaged component
Service Action:	1. Locate Axle Lock Solenoid connector -C02_CH and disconnect from the valve block. Measure voltage at pin 2/2. If voltage is high, disconnect interconnect -C24_TH / -C24_TH and measure pin 2/12 on both connectors. Trace the fault back to high from the connector measuring high. 2. Check Base Bosch CU connector. Examine Pin 82/96 - check for bent pins, debris, stray wires, water ingress. 3. Check all connectors for water ingress 4. Check harness for damage, especially abrasions, pinching. Check all connectors for damage. Check solenoid valve connector for any water ingress, debris etc. 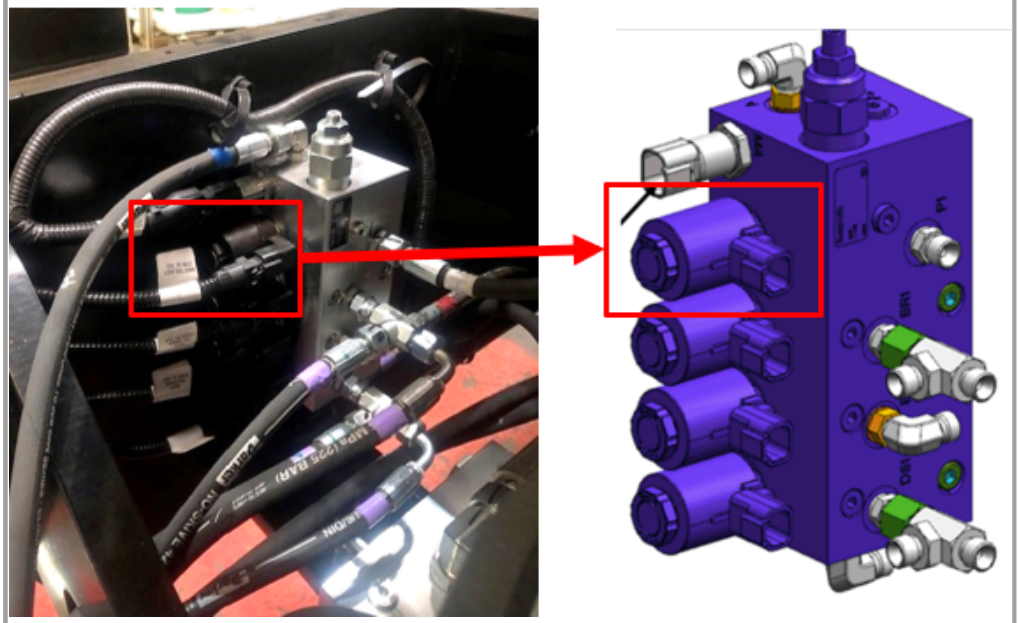

© 2026 JCB INDIA LTD

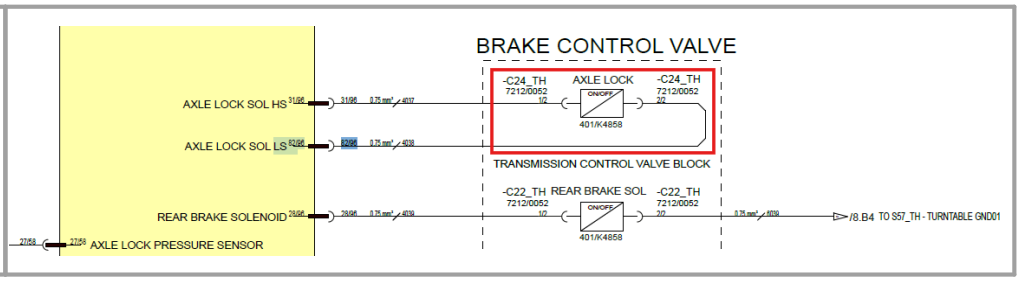

5.1.292 B1348-16

Error code:	B1348-16
ECU	Base ECU
Description:	Oscillation Axle - Oscillating Axle Solenoid Value Low Side Short Circuit to Low.
Component:	Oscillating Axle Solenoid
Vehicle reaction:	Detect failure mode with Safout method - Switch Axle Lock output to off;
Possible Cause:	1. A short circuit within the wiring harness 2. A short circuit to the chassis 3. A short circuit within the harness connectors 4. Water damage/ingress within the harness connectors 5. Damaged component
Service Action:	1. Locate Axle Lock Solenoid connector -C02_CH and disconnect from the valve block. Measure resistance to GND / Chassis at pin 2/2. If resistance is low, disconnect interconnect -C24_TH / -C24_TH and measure pin 2/12 on both connectors. Trace the fault back to GND Short from the connector measuring Low. 2. Check Base Bosch CU connector. Examine Pin 82/96 - check for bent pins, debris, stray wires, water ingress. 3. Check all connectors for water ingress 4. Check harness for damage, especially abrasions, pinching. Check all connectors for damage. Check solenoid valve connector for any water ingress, debris etc.

© 2026 JCB INDIA LTD

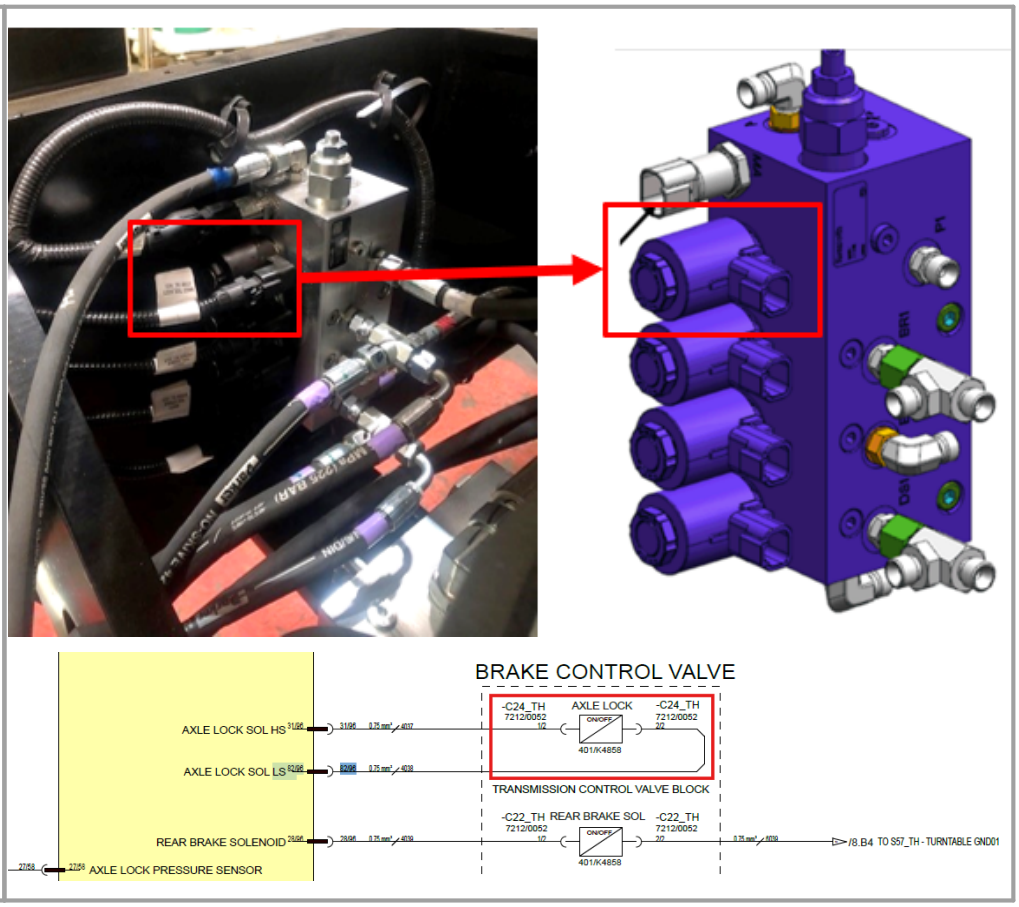

5.1.293 B1349-13

Error code:	B1349-13
ECU	Base ECU
Description:	Oscillating Axle - Oscillating Axle Solenoid Value Fault.
Component:	Oscillating Axle Solenoid
Vehicle reaction:	Detect failure mode with Safout method - Switch Axle Lock output to off;
Possible Cause:	1. A short or open circuit within the wiring harness 2. A short or open circuit within the harness connectors 3. Water damage/ingress within the harness connectors 4. Damaged component

© 2026 JCB INDIA LTD

Service Action:	1. Locate Axle Lock Solenoid Connector -C24_TH. Disconnect the connector and inspect. Check for backed out pins, water ingress, broken or poorly terminated wires, damaged terminals. Inspect Solenoid valve connector also, checking for any damage, debris, water ingress etc. 2. Perform continuity checks. Check Pin 1/2 to Base Bosch ECU terminal 31/96 (Wire #4037). Check Pin 2/2 to Base Bosch ECU terminal 82/96 (Wire #4038). 3. Check Interconnects -C56_TH / -C56_CH. ensure seated correctly. Check for damage, backed out pins, water ingress, damaged wires etc. 4. Check Base Bosch ECU connector (96-way) for any damage, bent pins, backed out pins, water ingress or any other damage that may cause issue. 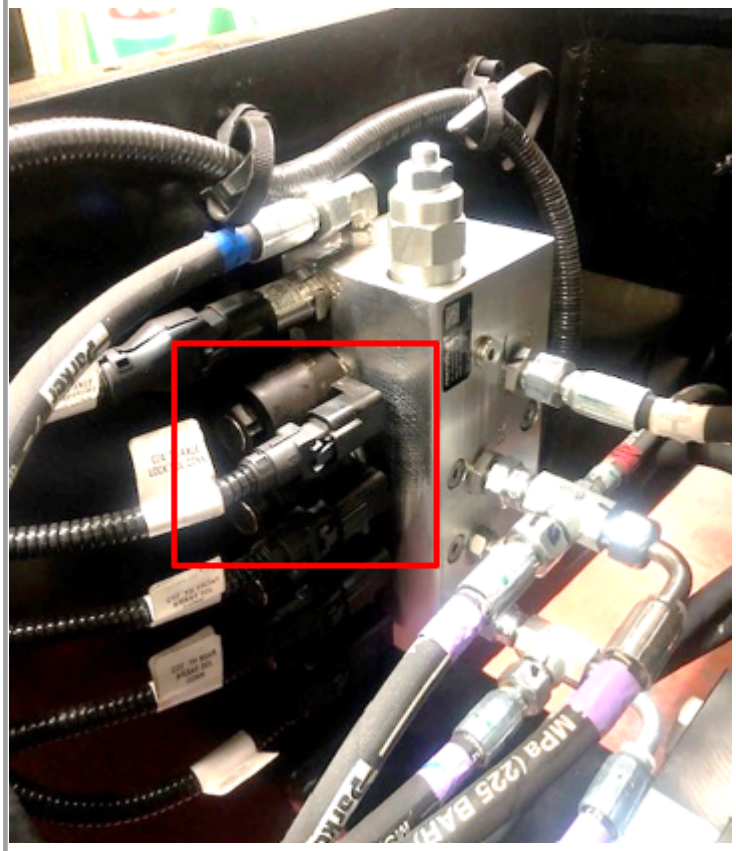 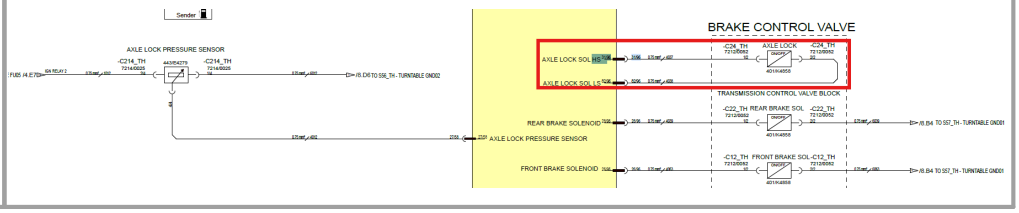

© 2026 JCB INDIA LTD

5.1.294 B1350-17

Error code:	B1350-17
ECU	Base ECU
Description:	ARTICULATED BOOM RAISE OR LOWER DIRECTIONAL Solenoid Valve Low Side Short Circuit to High
Component:	ARTICULATED BOOM RAISE OR LOWER DIRECTIONAL Solenoid Valve
Vehicle reaction:	Disable articulated boom outputs
Possible Cause:	1. Poor or loose connection 2. Break in wiring 3. Water in connector 4. Broken pin or connector 5. Faulty or Damage solenoid
Service Action:	1. Check coil resistance 5-10 ohms 2. Check wiring from coil to ECU wire 4042,4043 & 4044A, 4044B, 4044C for cut, pinch or and damage. 3. Check ECU Pin 53/96, 77/96, 88/96 for bend or back out or any damage. 4. Check solenoid connector C01_TH and C02_TH for loose connection or any damage. 5. Check if valve is mechanically jammed 6.Turn ignition on off to clear code

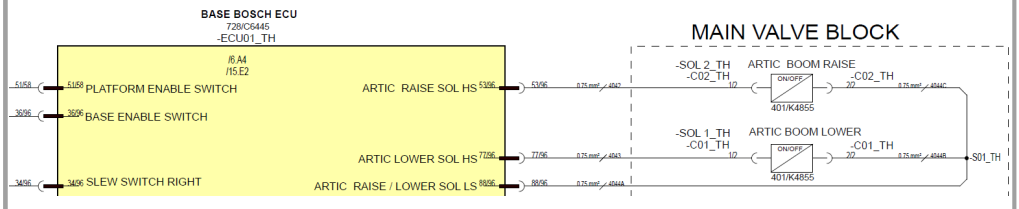

© 2026 JCB INDIA LTD

5.1.295 B1351-16

Error code:	B1351-16
ECU	Base ECU
Description:	ARTICULATED BOOM RAISE OR LOWER DIRECTIONAL Solenoid Valve Low Side Short Circuit to Low
Component:	ARTICULATED BOOM RAISE OR LOWER DIRECTIONAL Solenoid Valve
Vehicle reaction:	Disable articulated boom outputs
Possible Cause:	1. Poor or loose connection 2. Break in wiring 3. Water in connector 4. Broken pin or connector 5. Faulty or Damage solenoid
Service Action:	1. Check coil resistance 5-10 ohms 2. Check wiring from coil to ECU wire 4042,4043 & 4044A, 4044B, 4044C for cut, pinch or and damage. 3. Check ECU Pin 53/96, 77/96, 88/96 for bend or back out or any damage. 4. Check solenoid connector C01_TH and C02_TH for loose connection or any damage. 5. Check if valve is mechanically jammed 6.Turn ignition on off to clear code 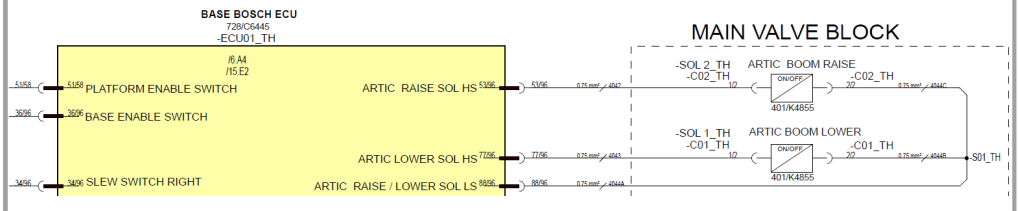

© 2026 JCB INDIA LTD

5.1.296 B1353-16

Error code:	B1353-16
ECU	Base ECU
Description:	Ignition - Engine Ignition Short Circuit to Low.
Component:	Engine Ignition
Vehicle reaction:	Detect failure mode. Switch output to off
Possible Cause:	1. A short circuit within the wiring harness 2. A short circuit to the chassis 3. A short circuit within the harness connectors 4. Water damage/ingress within the harness connectors 5. Damaged component
Service Action:	1. Locate wire #4027 from Base Bosch ECU pin 89/96. Check wire through to interconnect -C41_TH / -C41_EH pin 1/12. Test for short to GND. Disconnect Interconnects and test for short to GND again on both connectors Pin 1/12 2. Locate wire #4027 from interconnect -C41_EH Pin 1/12 and check wire through to Engine ECU Connector -C05_EH Pin 44/62. Check for shorts to GND 3. Check Base Bosch ECU, Interconnects and Engine ECU Connectors for water ingress, damage, bent pins, debris or stray wires. 4. Check harness between Base Bosch ECU to Interconnects and Engine ECU Connectors for any damage

© 2026 JCB INDIA LTD





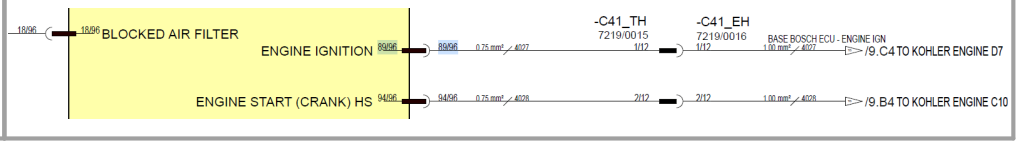

5.1.297 B1354-13

Error code:	B1354-13
ECU	Base ECU
Description:	Ignition - Engine Ignition Open Circuit or Short Circuit to High.
Component:	Engine Ignition
Vehicle reaction:	Detect failure mode. Switch output to off
Possible Cause:	1. A short circuit within the wiring harness 2. A short circuit within the harness connectors 3. Water damage/ingress within the harness connectors 4. Damaged component
Service Action:	1. Locate wire #4027 from Base Bosch ECU pin 89/96. Check wire through to interconnect -C41_TH / -C41_EH pin 1/12. Test for short to high. Disconnect Interconnects and test for short to high again on both connectors Pin 1/12

© 2026 JCB INDIA LTD

	2. Locate wire #4027 from interconnect -C41_EH Pin 1/12 and check wire through to Engine ECU Connector -C05_EH Pin 44/62. Check for shorts to High. 3. Check Base Bosch ECU, Interconnects and Engine ECU Connectors for water ingress, damage, bent pins, debris or stray wires. 4. Check harness between Base Bosch ECU to Interconnects and Engine ECU Connectors for any damage.  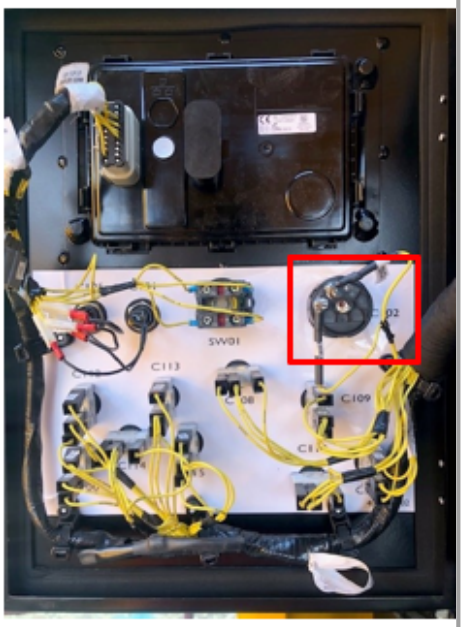 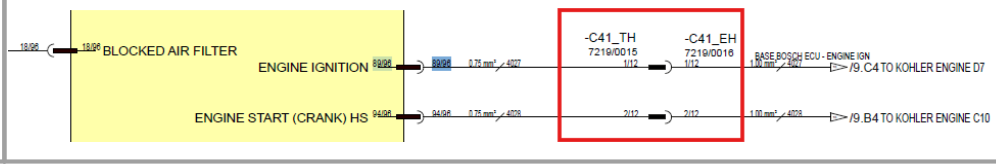

5.1.298 B1355-16

Error code:	B1355-16
ECU	Base ECU
Description:	HYDRAULIC GENERATOR Valve Short Circuit to Low
Component:	Hydraulic Generator Valve
Vehicle reaction:	Detect failure mode. Switch output to off

© 2026 JCB INDIA LTD

Possible Cause:	1. A short circuit within the wiring harness 2. A short circuit to the chassis 3. A short circuit within the harness connectors 4. Water damage/ingress within the harness connectors 5. Damaged component
Service Action:	1. Locate wire #4041 from Base Bosch ECU to Hydraulic Generator Solenoid connector -C25_TH. Disconnect -C25_TH and measure resistance to GND on Pin 1/2. If value low then check wire back to Base Bosch ECU. 2. Check Bosch ECU pin 41/58 for any damage, bent pins, debris, water ingress. 3. Check Wire #4041 for abrasions, pinching or any other reason to create short to GND / Chassis 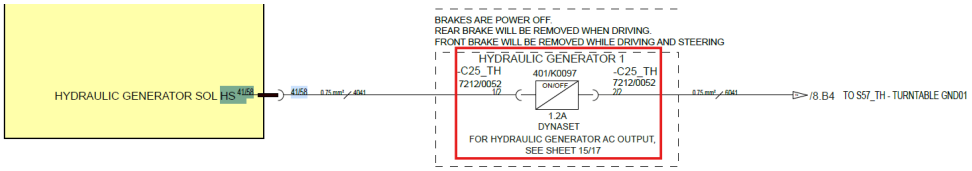

5.1.299 B1356-13

Error code:	**B1356-13**
ECU	Base ECU
Description:	HYDRAULIC GENERATOR Valve High Side Short Circuit to High or Open Circuit
Component:	Hydraulic Generator Valve
Vehicle reaction:	Detect failure mode. Switch output to off
Possible Cause:	1. A short or pen circuit within the wiring harness 2. A short or open circuit within the harness connectors 3. Water damage/ingress within the harness connectors 4. Damaged component

© 2026 JCB INDIA LTD

Service Action:	1. Locate wire #4041 from Base Bosch ECU to Hydraulic Generator Solenoid connector -C25_TH. Disconnect -C25_TH and measure voltage at Pin 1/2. If value high (>10.7V) then check wire back to Base Bosch ECU. 2. Check Bosch ECU pin 41/58 for any damage, bent pins, debris, water ingress. 3. Check Wire #4041 for abrasions, pinching or any other reason to create short to GND / Chassis 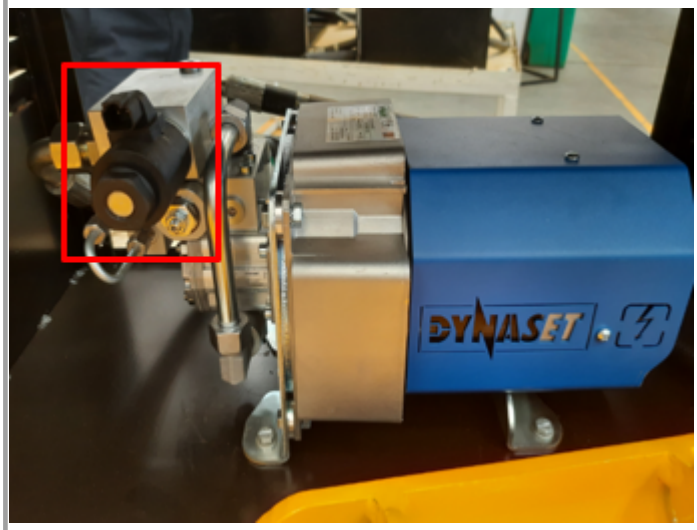 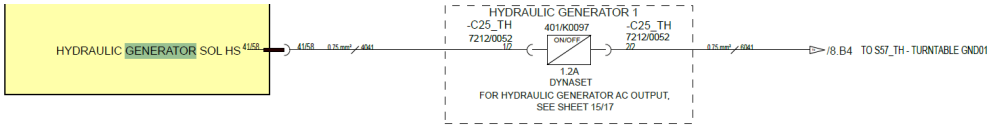

5.1.300 B1357-16

Error code:	**B1357-16**
ECU	Base ECU
Description:	Engine Start (Crank) High Side Signal (Base ECU to Engine ECU) Short Circuit to Low
Component:	Engine Crank
Vehicle reaction:	Detect failure mode. Switch output to off
Possible Cause:	1. A short circuit within the wiring harness 2. A short circuit to the chassis

© 2026 JCB INDIA LTD

	3. A short circuit within the harness connectors 4. Water damage/ingress within the harness connectors 5. Damaged component
Service Action:	1. Locate wire #4028 from Base Bosch ECU pin 94/96 to interconnect -C41_TH. Disconnect -C41_TH from mating half -C41_EH. Measure voltage at pin 2/12 on both interconnect connectors. If one is stuck high, then trace to fault. 2. Check continuity from interconnect pins 2/12 back to Base Bosch ECU pin 94/96 and to engine ECU on connector -C05_EH pin 39/62. 3. Check all connectors mentioned above for damage, backed out pins, short circuits and water ingress 4. Check wire #4028 back through the harness, checking for breaks, abrasions, pinching or any other damage. 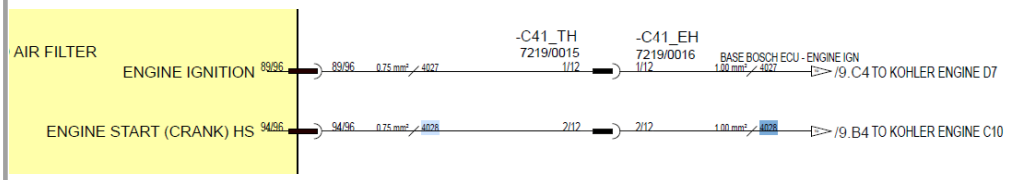

5.1.301 B1358-13

Error code:	**B1358-13**
ECU	Base ECU
Description:	Engine Start (Crank) High Side Signal (Base ECU to Engine ECU) Short Circuit to High or Open Circuit
Component:	Engine Crank
Vehicle reaction:	Detect failure mode. Switch output to off
Possible Cause:	1. A short or open circuit within the harness. 2. A short or open circuit within the harness connectors. 3. Water damage/ingress within the harness connectors. 4. Damaged component(s).

© 2026 JCB INDIA LTD

Service Action:	1. Check continuity between Base Bosch ECU Pin 94/96 and Engine ECU Pin 39/92 (Wire #408). Check Wire #4028 is not short circuit to high. 2. Check ECU Connectors and inter connector -C41. Ensure no bent pins or stray wires causing short circuit. Ensure wires are correctly terminated. 3. Check ECU Connectors and inter connector -C41 for any water damage or water ingress. 4. Check connectors and harness between Base ECU pin 94/96 and Engine ECU pin 39/92 for any damage. 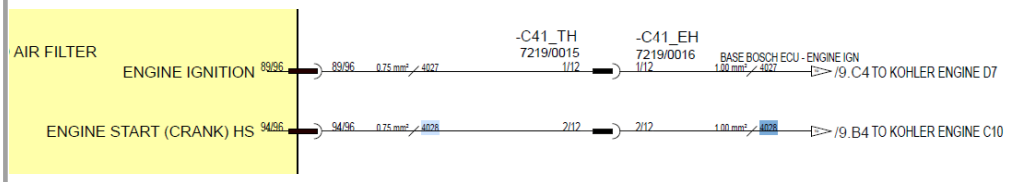

5.1.302 B1541-13

Error code:	**B1541-13**
ECU	Base ECU
Description:	Weight sensor - No Calibration data available for Load Cell.
Component:	Overload Sensor 2
Vehicle reaction:	When there is no load cell calibrated initially after flashing ECU first time
Possible Cause:	1. Load sensor is not calibrated 2. Load sensor is faulty 3. Short Circuit to High 4. Water ingress
Service Action:	1. This Error Code is due to the new weight sensor calibration. It will need a fresh calibration. 2. Ensure the latest display software's are flashed to the display and you now have the option called known load calibration.

© 2026 JCB INDIA LTD

3. It will need a fresh calibration. The zero load cal and max load cal will require to be carried out.

4. Zero load is as it was before and an empty basket.

5. Full load is the maximum allowed for the machine, this will give the maximum allowed, but if this is not available then a known load may be put into the basket and the value changed to match this on the display. e.g. 100 kg. the weight sensor will predict the load up to the maximum but it will apply a de rate of around 5-20% dependent on the machine.

6. If there is an error or weight sensor calibration fails to enter or fails on completion then we need to look into the sensor values in the display.

7. Flashing ecus, and ecu replacement should be very last action after everything has been investigated.







© 2026 JCB INDIA LTD

	Load Cell Troubleshooting Flow Chart

5.1.303 B1681-13

Error code:	**B1681-13**
ECU	Base ECU
Description :	Unexpected Alternator input fault Short to low (When engine is started / Engine running)
Component :	Alternator
Vehicle reaction:	Continue Operation
Possible Cause:	1. A short circuit to the chassis 2. A short circuit within the harness connectors 3. Water damage/ingress within the harness connectors 4. Damaged component

© 2026 JCB INDIA LTD

Service Action:	1.Check 5A fuse F11 in POD Box and wire #1040. 2.Check Alternator Resistance RES01_EH and Diode D01_EH. 3.Check Wire #1034, 4034A, 4034 for any cut, damage or short. 4.Check D+ relay, replace if defective. 5.Check 5A fuse FU12_TCP and wire #1036, 1036C and Base ECU pin 58/96. 6.Check alternator condition, replace if defective. 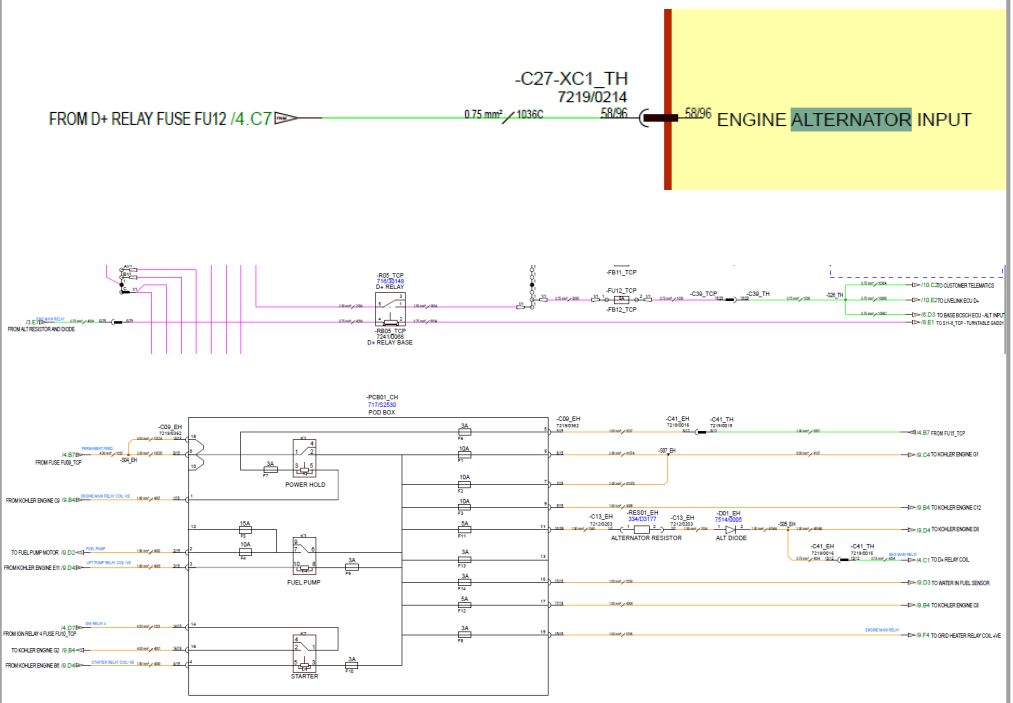

5.1.304 B1682-13

Error code:	**B1682-13**
ECU	Base ECU
Description :	Unexpected low oil pressure input Short to Low / GND (When engine is started / Engine running)
Component :	Oil Pressure Switch

© 2026 JCB INDIA LTD

Vehicle reaction:	Continue Operation
Possible Cause:	1. A short circuit to the chassis 2. A short circuit within the harness connectors 3. Water damage/ingress within the harness connectors 4. Damaged component
Service Action:	1.Check connections and wires for short circuits 2.Check for any debris or water inside the connector terminals. 3.Check the harness is not damaged and is routed correctly. 4.The oil pressure switch is connected directly to engine ECU. There is only 1 wire and is ground returned through the engine block - open or closed circuit. 5.Oil pressure below 0.6bar - Switch closed (to ground). Oil pressure higher than 0.6 bar - Switch open. 6.Check when the Fault code is being raised, i.e when cranking or when switching off the machine. 7.Check the oil pressure switch and measure the signal for the when the engine is OFF and when the engine is ON. 8.Check Oil Pressure sensor condition, Replace if Defective.

© 2026 JCB INDIA LTD

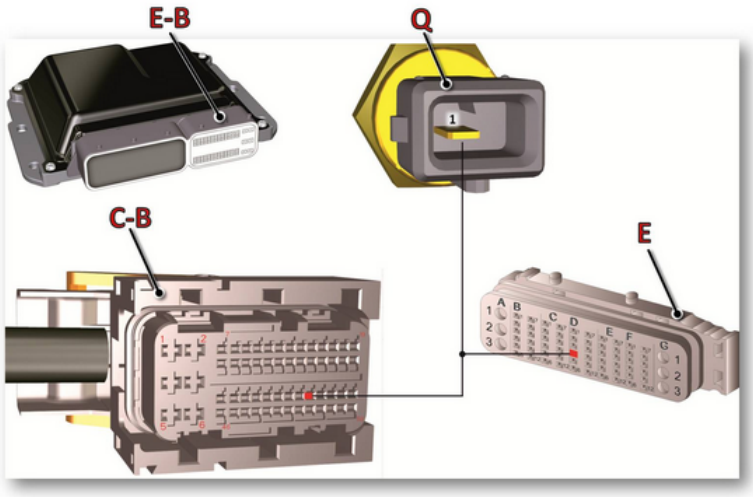

E-B	ECU - Connector **B**		**PIN**		**PIN**	
C-B	Connector **B**	**C-B**	**40**	OP SW	**1**	**Q**
E	Vehicle Connector	**E**	**D4**	OP SW		
Q	Oil Pressure Switch					

5.1.305 B1694-17

Error code:	**B1694-17**
ECU	Platform ECU
Description:	AUX / Overload override button unpressed condition - Circuit short to high (10v)
Component:	Platform Aux Switch
Vehicle reaction:	Detect failure mode; Ignore input
Possible Cause:	1. A short circuit within the wiring harness 2. A short circuit within the harness connectors 3. Water damage/ingress within the harness connectors 4. Damaged component
Service Action:	1. Check switch Aux Pump Switch -SW209_PCP. Check Wire #1088 from Aux Switch connector -C209-2_PCP to Platform Bosch ECU Pin 43/96 and Wire #0090. Voltage should be +10V

© 2026 JCB INDIA LTD

	2. Check Voltage a Aux Pump Switch Pin 2 at -C209-2_PCP. This should be +10V 3. Check Operation of switch 4. Check all connectors for water ingress. 5 Check harness especially for abrasions and pinching. Check condition of connectors, checking especially for backed out or bent pins 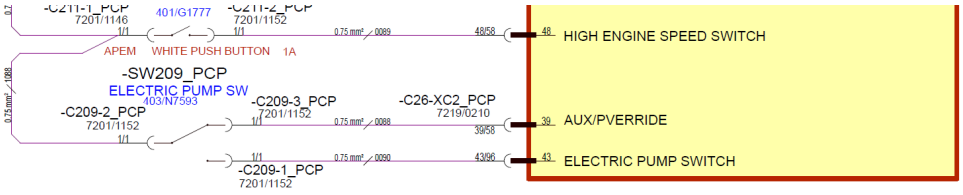

5.1.306 B1695-16

Error code:	B1695-16
ECU	Platform ECU
Description:	AUX / Overload override button unpressed condition - Circuit short to low
Component:	Platform Aux Switch
Vehicle reaction:	Detect failure mode; Ignore input
Possible Cause:	1. A short circuit within the wiring harness 2. A short circuit to the chassis 3. A short circuit within the harness connectors 4. Water damage/ingress within the harness connectors 5. Damaged component
Service Action:	1. Check switch Aux Pump Switch -SW209_PCP. Check Wire #0088 from Aux Switch connector -C209-3_PCP & Platform Bosch ECU Pin 43/96 and Wire #0090. Voltage should be +0V 2. Check Voltage a Aux Pump Switch Pin 2 at -C209-2_PCP. This should be +10V 3. Check Operation of switch

© 2026 JCB INDIA LTD

	4. Check all connectors for water ingress. 5. Check harness especially for abrasions and pinching. Check condition of connectors, checking especially for backed out or bent pins 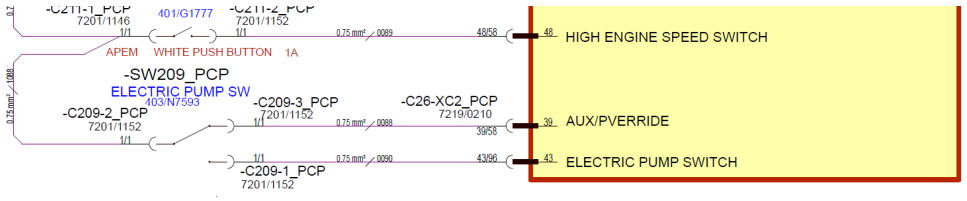

5.1.307 B1696-13

Error code:	B1696-13
ECU	Platform ECU
Description:	AUX / Overload override button both conditions - Signal plausibility failure (Circuit open)
Component:	Platform Aux Switch
Vehicle reaction:	Detect failure mode; Ignore input
Possible Cause:	1. A short circuit within the wiring harness 2. A short circuit to the chassis 3. A short circuit within the harness connectors 4. Water damage/ingress within the harness connectors 5. Damaged component
Service Action:	1. Check switch Aux Pump Switch -SW209_PCP. Check Wire #0088 from Aux Switch connector -C209-3_PCP to Platform Bosch ECU Pin 43/96. Voltage should be +0V 2. Check Voltage a Aux Pump Switch Pin 2 at -C209-2_PCP. This should be +10V 3. Check Operation of switch 4. Check all connectors for water ingress.

© 2026 JCB INDIA LTD

	5. Check harness especially for abrasions and pinching. Check condition of connectors, checking especially for backed out or bent pins

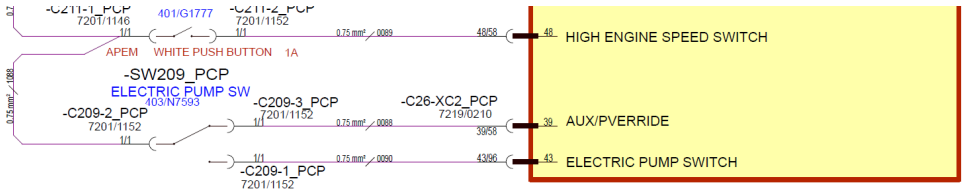

5.1.308 B1697-92

Error code:	**B1697-92**
ECU	Platform ECU
Description:	AUX / Overload override button both conditions - Signal plausibility failure (10v)
Component:	Platform Aux Switch
Vehicle reaction:	Detect failure mode; Ignore input
Possible Cause:	1. A short circuit within the wiring harness 2. A short circuit to the chassis 3. A short circuit within the harness connectors 4. Water damage/ingress within the harness connectors 5. Damaged component
Service Action:	1. Check switch Aux Pump Switch -SW209_PCP. Check Wire #0088 from Aux Switch connector -C209-3_PCP to Platform Bosch ECU Pin 43/96. Voltage should be +0V 2. Check Voltage a Aux Pump Switch Pin 2 at -C209-2_PCP. This should be +10V 3. Check Operation of switch 4. Check all connectors for water ingress. 5. Check harness especially for abrasions and pinching. Check condition of connectors, checking especially for backed out or bent pins

© 2026 JCB INDIA LTD

	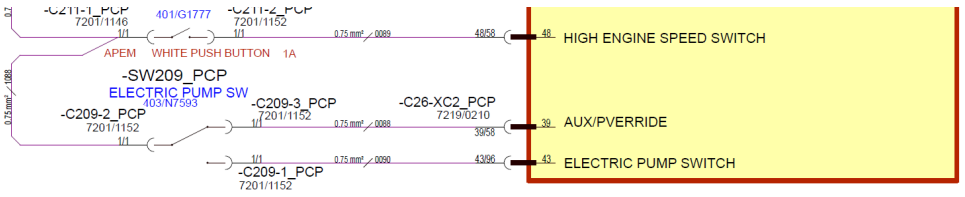

5.1.309 U0073-87

Error code:	U0073-87
ECU	Base ECU
Description:	CAN1 node error
Component:	EGR
Vehicle reaction:	This fault code indicates the ECU has detected a fault on the CAN Communication.
Possible Cause:	Wiring Fault ECU Fault CAN System Fault
Service Action:	1. Check if other fault codes detected are found: - Yes: Refer also to the other fault codes before going to step 2 - NO: Proceed to Step 2 2. Check the harness continuity, and machine and earth contacts.Repair/replace as necessary 3. Disconnect the harness from the ECU and inspect. Check seals are in place, check for signs of corrosion and pin damage. 4. If harness is damaged repair/replace as necessary. If ECU pins are damaged, replace ECU and Reflash, see section on ECU flashing. 5. Check CAN BUS wiring, connectors and resistors See vehicle electrical schematic for details. 6. Check for any debris or water inside the ECU, EGR, Machine connection connector terminals

© 2026 JCB INDIA LTD

	7. This may be as a consequence of pressure washing the engine, loose connectors or poor connector sealing. 8. Check the harness is not damaged and is routed correctly. 9. Complete the CAN testing procedure described in the help page CAN Network. 308

5.1.310 U0411-87

Error code:	U0411-87
ECU	Base ECU
Description:	EGR no transmission/not received failure (for CAN)
Component:	EGR
Vehicle reaction:	This error code will display an red warning light on the DECU as well as an red warning prompt.
Possible Cause:	1. Damaged harness or harness connectors. 2. Faulty EGR
Service Action:	1. Check that the electrical connector is plugged into the component. 2. Check for any debris or water inside the ECU, EGR, Machine connection connector terminals.This may be as a consequence of pressure washing the engine, loose connectors or poor connector sealing. 3. Check the harness is not damaged and is routed correctly. 4. Check the harness continuity, and machine earth contacts. 5. Check the tension on the EGR wiring connector, If under 8,0 volts verify the machine electric circuits. 6. If the error Still persists, replace the component.

© 2026 JCB INDIA LTD

	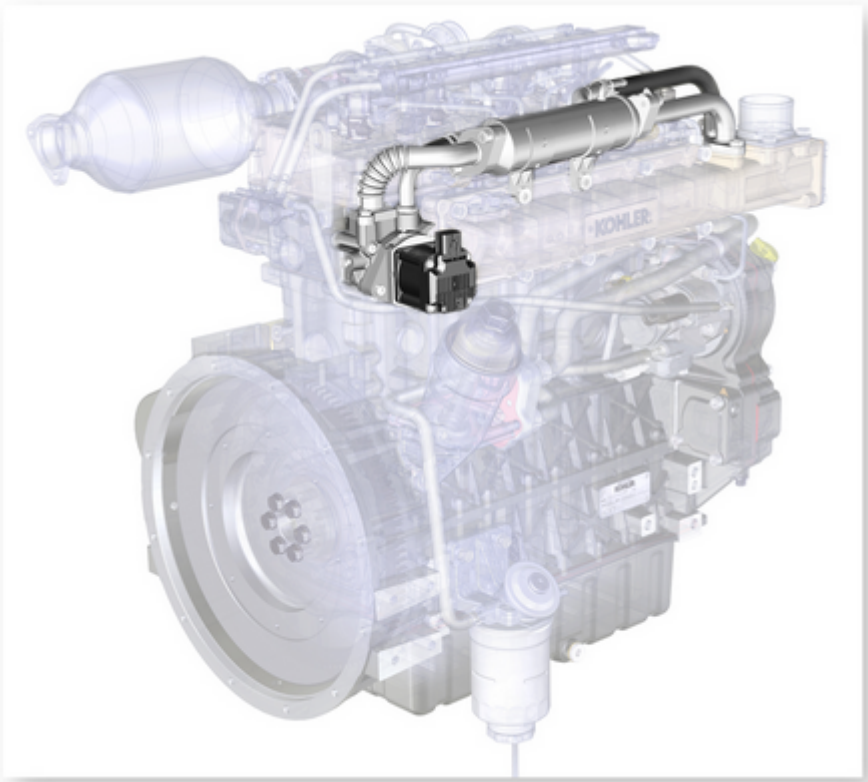

5.1.311 U1001-87

Error code:	U1001-87
ECU	Base ECU
Description:	CAN2 node error
Component:	EGR
Vehicle reaction:	This fault code indicates the ECU has detected a fault on the CAN2 Communication.
Possible Cause:	Wiring Fault ECU Fault CAN System Fault
Service Action:	1. Check if other fault codes detected are found: - Yes: Refer also to the other fault codes before going to step 2

© 2026 JCB INDIA LTD

	- NO: Proceed to Step 2 2. Check for any debris or water inside the ECU, EGR, Machine connection connector terminals 3. Check the harness continuity, and machine and earth contacts.Repair/replace as necessary 4. Disconnect the harness from the ECU and inspect. Check seals are in place, check for signs of corrosion and pin damage. 5. If harness is damaged repair/replace as necessary. If ECU pins are damaged, replace ECU and Reflash, see section on ECU flashing. 6. Check CAN BUS wiring, connectors and resistors See vehicle electrical schematic for details. 7. Check for any debris or water inside the ECU, EGR, Machine connection connector terminals 8. This may be as a consequence of pressure washing the engine, loose connectors or poor connector sealing. 9. Check the harness is not damaged and is routed correctly. 10. Complete the CAN testing procedure described in the help page CAN Network 308.

5.1.312 U1293-87

Error code:	U1293-87
ECU	Base ECU
Description:	CAN TIME OUT ERROR
Component:	ECU

© 2026 JCB INDIA LTD

Vehicle reaction:	1. Recipient transmits DM1 with SPN field = PGN of missing CAN message and FMI = 9 2. Recipient resets RC (rolling counter) to 0 3. Recipient disables all outputs 4. Transmitter re-transmits CAN message requested by Recipient with RC set to 0.
Possible Cause:	1. Incorrect software or mis configured device 2. A poor connection or damaged terminal within the connector(s) 3. A damaged or broken wire within the wiring harness 4. Component is damaged

Service Action:	Connect via JCB Service Master
	• Run the Vehicle Setup tool.
	• Confirm:
	  ○ VIN number is displayed in green.
	  ○ All CAN Bus devices have paired successfully.
	
	Check CAN Terminator Resistors
	• Ensure terminators are correctly placed at both ends of the CAN network (base and platform control panels).
	• Turn Ignition OFF.
	• Remove LiveLink connector from LiveLink ECU.
	• Remove the CAN terminator at the base platform.
	• Measure resistance between CAN-L and CAN-H on the harness connector:
	  ○ Expected: 120 Ω
	  ○ If ≈ 0 Ω → Short circuit on CAN Bus.
	  ▪ To isolate:
	  • Replace CAN terminator.
	  • Disconnect CAN bus interconnect at -C32_TH / -C32_BH.
	  • Measure resistance at each connector:
	  ○ The one with low reading → Faulty section.
	  ○ If high reading → Break in CAN Bus wiring.

© 2026 JCB INDIA LTD

	▪ Section the network and perform continuity testing to locate the break. Inspect Wiring • Check CAN harness for: ○ Abrasions ○ Pinching • Inspect all CAN device connectors (ECUs, displays, interconnects) for damage. Verify Connections • Ensure all interconnects and device connectors are: ○ Fully inserted ○ Free from water ingress CAN Connection ○ Complete the CAN testing procedure described in the help page CAN Network 308. 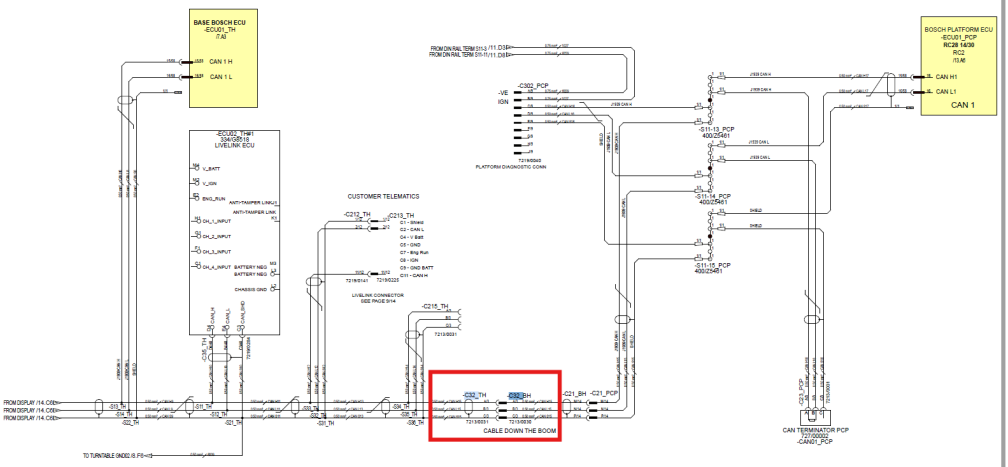

5.1.313 U1294-56

Error code:	U1294-56
ECU	Base ECU
Description:	CAN RC ERROR - Rolling counter for platform input signal1 message

© 2026 JCB INDIA LTD

Component:	ECU
Vehicle reaction:	Recipient ignores received CAN message and transmits DM1 with SPN field = PGN of CAN message and FMI = 10 Recipient retains existing values. Recipient resets RC (rolling counter) to 0 Transmitter re-transmits CAN message requested by Recipient with RC set to 0.
Possible Cause:	1. Incorrect software or mis configured device 2. A poor connection or damaged terminal within the connector(s) 3. A damaged or broken wire within the wiring harness 4. Component is damaged

Service Action:	Connect and Verify Setup
	• Connect to the machine using JCB Service Master.
	• Run the Vehicle Setup tool.
	• Confirm:
	  ○ VIN number is displayed in green
	  ○ All CAN Bus devices are paired successfully.
	
	Check CAN Terminators and Measure Resistance
	• Ensure two CAN terminator resistors are correctly placed:
	  ○ One at the base control panel.
	  ○ One at the platform control panel.
	• Turn Ignition OFF.
	• Remove Livelink Connector from the Livelink ECU.
	• Remove the CAN terminator at the base platform.
	• Measure resistance between CAN-L and CAN-H on the harness connector:
	  ○ Expected reading: ≈120 Ω.
	  ○ If reading is close to 0 Ω → indicates short circuit on CAN bus.
	  ▪ To isolate:
	  • Replace the CAN terminator.
	  • Disconnect CAN bus interconnect at -C32_TH / -C32_BH.

© 2026 JCB INDIA LTD

- Measure resistance of the CAN bus on each connector:
  - The one with low reading → section with short circuit.
- If reading is very high → indicates break in CAN wiring.
  - Section up the CAN bus network and perform continuity tests to locate the faulty section.

Inspect Wiring

- Check entire CAN bus harness for:
  - Abrasion.
  - Pinching.
- Inspect connectors at:
  - CAN devices (ECUs, displays, interconnects).
  - Look for physical damage.

Ensure all interconnects and device connectors are:

- Fully inserted.
- Properly locked.

Check for Water Ingress

- Inspect all connectors for moisture or corrosion.
- Dry and clean if necessary.

CAN Connection

- Complete the CAN testing procedure described in the help page CAN Network 308.

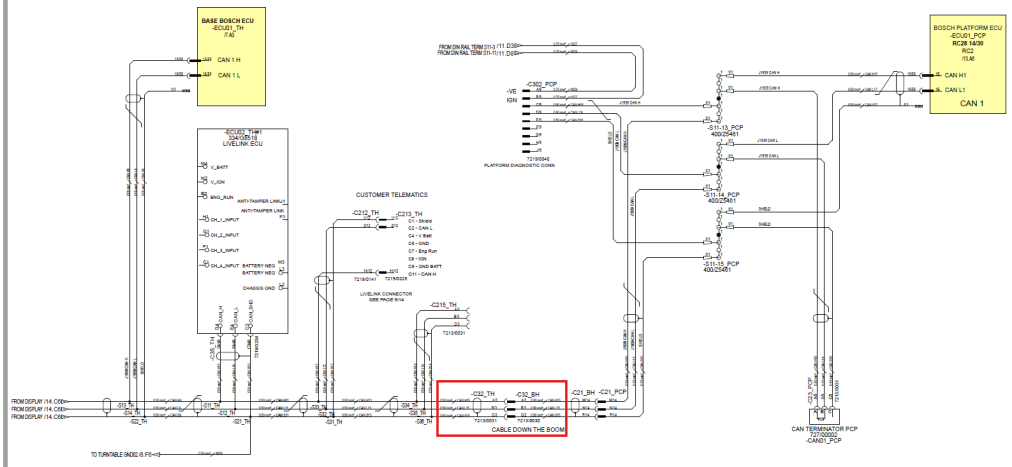

© 2026 JCB INDIA LTD

5.1.314 U1295-41

Error code:	U1295-41
ECU	Base ECU
Description:	CAN CHECK SUM ERROR
Component:	ECU
Vehicle reaction:	Recipient ignores received CAN message and transmits DM1 with SPN field = PGN of CAN message and FMI = 2 Recipient retains existing values. Recipient resets RC (rolling counter) to 0 Transmitter re-transmits CAN message requested by Recipient with RC set to 0.
Possible Cause:	1. Mismatch between transmitting and receiving message between ECU's

Service Action:	Connect and Verify Setup
	• Connect to the machine using JCB Service Master.
	• Run the Vehicle Setup tool.
	• Confirm:
	  ○ VIN number is displayed in green
	  ○ All CAN Bus devices are paired successfully.
	
	Check CAN Terminators and Measure Resistance
	• Ensure two CAN terminator resistors are correctly placed:
	  ○ One at the base control panel.
	  ○ One at the platform control panel.
	• Turn Ignition OFF.
	• Remove Livelink Connector from the Livelink ECU.
	• Remove the CAN terminator at the base platform.

© 2026 JCB INDIA LTD

- Measure resistance between CAN-L and CAN-H on the harness connector:
  - Expected reading: ≈120 Ω.
  - If reading is close to 0 Ω → indicates short circuit on CAN bus.
    - To isolate:
      - Replace the CAN terminator.
      - Disconnect CAN bus interconnect at -C32_TH / -C32_BH.
      - Measure resistance of the CAN bus on each connector:
        - The one with low reading → section with short circuit.
  - If reading is very high → indicates break in CAN wiring.
    - Section up the CAN bus network and perform continuity tests to locate the faulty section.

Inspect Wiring

- Check entire CAN bus harness for:
  - Abrasion.
  - Pinching.
- Inspect connectors at:
  - CAN devices (ECUs, displays, interconnects).
  - Look for physical damage.

Ensure all interconnects and device connectors are:

- Fully inserted.
- Properly locked.

Check for Water Ingress

- Inspect all connectors for moisture or corrosion.
- Dry and clean if necessary.

CAN Connection

- Complete the CAN testing procedure described in the help page CAN Network 308.

© 2026 JCB INDIA LTD

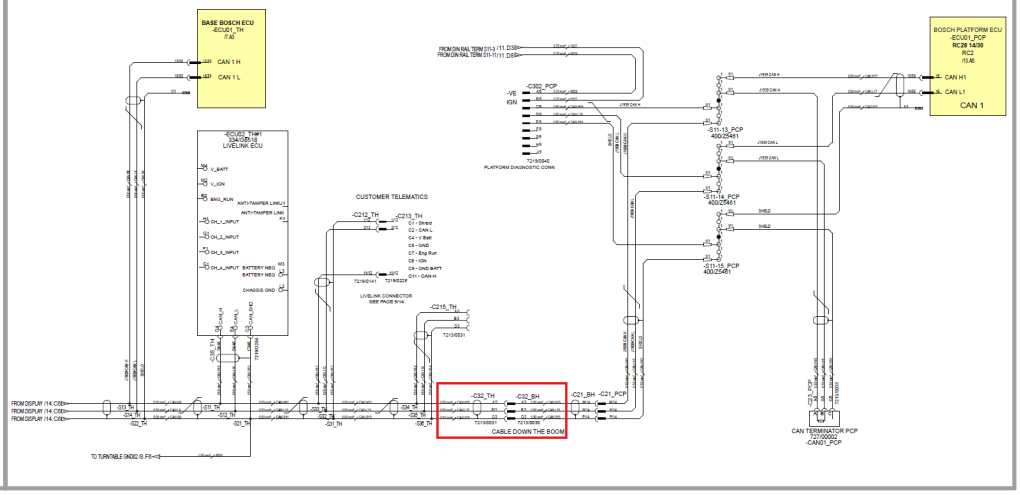

5.1.315 U1296-87

Error code:	U1296-87
ECU	Platform ECU
Description:	CAN TIME OUT ERROR
Component:	ECU
Vehicle reaction:	Recipient transmits DM1 with SPN field = PGN of missing CAN message and FMI = 9 Recipient resets RC (rolling counter) to 0 Recipient disables all outputs Transmitter re-transmits CAN message requested by Recipient with RC set to 0.
Possible Cause:	1. Mismatched or un programmed VIN number in either Bosch ECU 2. Unterminated CAN network 3. Damaged CAN network 4. Poorly connected CAN network 5. Water Ingress
Service Action:	Connect via JCB Service Master • Run the Vehicle Setup tool. • Ensure: ○ VIN number is displayed in green.

© 2026 JCB INDIA LTD

	○ All CAN Bus devices have paired successfully. Check CAN Terminator Resistors • Confirm both terminators are correctly placed at either end of the CAN network (base and platform control panels). • Turn Ignition OFF. • Remove Livelink Connector from Livelink ECU. • Remove the CAN terminator at the base platform. • Measure resistance between CAN-L and CAN-H on the harness connector: ○ Expected: 120 Ω ○ If reading ≈ 0 Ω → Short circuit on CAN Bus. ▪ To isolate: • Replace CAN terminator. • Disconnect CAN bus interconnect at -C32_TH / -C32_BH. • Measure resistance at each connector: ○ The one with low reading → Faulty section. ○ If reading is high → Break in CAN Bus wiring. ▪ Section the network and perform continuity testing to locate the break. Inspect Wiring • Check CAN harness for: ○ Abrasions ○ Pinching • Inspect all CAN device connectors (ECUs, displays, interconnects) for damage. Verify Connections • Ensure all interconnects and device connectors are: ○ Fully inserted ○ Free from water ingress CAN Connection

© 2026 JCB INDIA LTD

	○ Complete the CAN testing procedure described in the help page CAN Network 308. 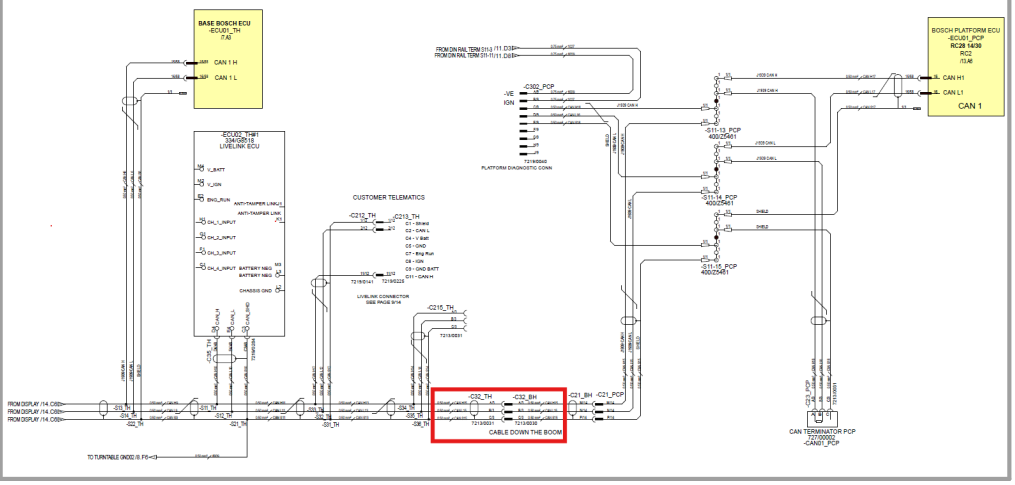

5.1.316 U1298-41

Error code:	U1298-41
ECU	Platform ECU
Description:	CAN CHECK SUM ERROR
Component:	ECU
Vehicle reaction:	Recipient ignores received CAN message and transmits DM1 with SPN field = PGN of CAN message and FMI = 2 Recipient retains existing values. Recipient resets RC (rolling counter) to 0 Transmitter re-transmits CAN message requested by Recipient with RC set to 0.
Possible Cause:	1. Mismatch between transmitting and receiving message between ECU's
Service Action:	1. Connect to the machine via JCB Service Master and run the 'Vehicle Setup' tool. Ensure that the VIN number is displayed in Green and that the

© 2026 JCB INDIA LTD

	CAN Bus devices have paired successfully. 2. Check both can terminator resistors are placed correctly at either end of the CAN network (at base and platform control panels). Turn Ignition to OFF and remove Livelink Connector from Livelink ECU. Remove the CAN terminator at the base platform and then measure the resistance of CAN-L to CAN-H on the harness connector. This should measure 120 ohms. Measuring a value close to 0 ohms will indicate a short circuit on the CAN bus. To narrow down the fault location, replace the CAN terminator and then disconnect the CAN bus interconnect at -C32_TH / -C32_BH. Measure the resistance of the CAN bus on each connector, the one that reads low will be the section with the short circuit. If the original measurement was a high reading, then there is a break in the CAN bus wiring. Again, section up the CAN Bus network and complete continuity testing to isolate the faulty section. 3. Check the CAN bus wiring runs to check for damage to the harness, especially abrasions and pinching. Check there is no damage at any of the CAN device connectors (Interconnects and ECU's / Displays etc) 4. Ensure all interconnects and device connectors are fully inserted. 5. Ensure all interconnects and device connectors have no water ingress issues. 6. Complete the CAN testing procedure described in the help page CAN Network 308.

© 2026 JCB INDIA LTD

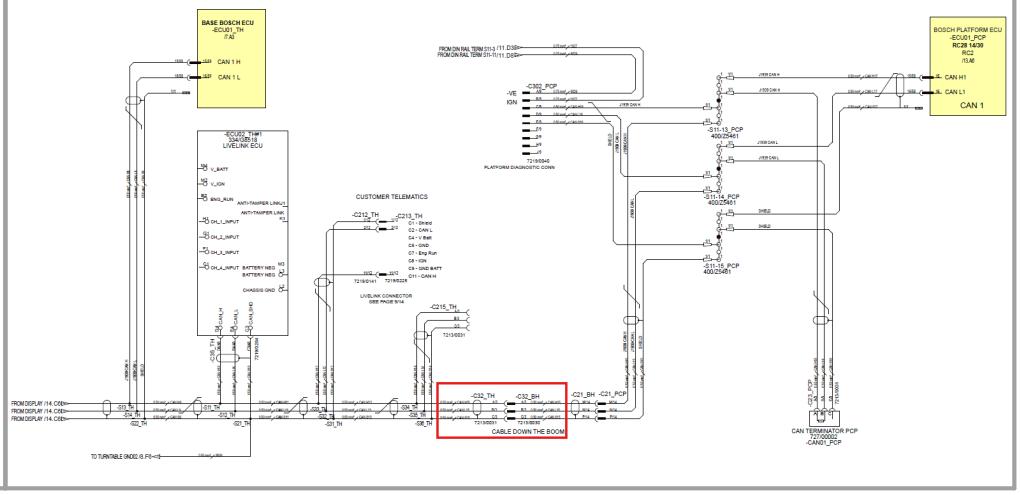

5.1.317 U1297-56

Error code:	U1297-56
ECU	Platform ECU
Description:	CAN RC ERROR
Component:	ECU
Vehicle reaction:	Recipient ignores received CAN message and transmits DM1 with SPN field = PGN of CAN message and FMI = 10 Recipient retains existing values. Recipient resets RC (rolling counter) to 0 Transmitter re-transmits CAN message requested by Recipient with RC set to 0.
Possible Cause:	1) Mismatched or un programmed VIN number in either Bosch ECU 2) Unterminated CAN network 3) Damaged CAN network 4) Poorly connected CAN network

© 2026 JCB INDIA LTD

	5) Water Ingress
Service Action:	1. Connect to the machine via JCB Service Master and run the 'Vehicle Setup' tool. Ensure that the VIN number is displayed in Green and that the CAN Bus devices have paired successfully. 2. Check both can terminator resistors are placed correctly at either end of the CAN network (at base and platform control panels). Turn Ignition to OFF and remove Livelink Connector from Livelink ECU. Remove the CAN terminator at the base platform and then measure the resistance of CAN-L to CAN-H on the harness connector. This should measure 120 ohms. Measuring a value close to 0 ohms will indicate a short circuit on the CAN bus. To narrow down the fault location, replace the CAN terminator and then disconnect the CAN bus interconnect at -C32_TH / -C32_BH. Measure the resistance of the CAN bus on each connector, the one that reads low will be the section with the short circuit. If the original measurement was a high reading, then there is a break in the CAN bus wiring. Again, section up the CAN Bus network and complete continuity testing to isolate the faulty section. 3. Check the CAN bus wiring runs to check for damage to the harness, especially abrasions and pinching. Check there is no damage at any of the CAN device connectors (Interconnects and ECU's / Displays etc) 4. Ensure all interconnects and device connectors are fully inserted. 5. Ensure all interconnects and device connectors have no water ingress issues. 6. Complete the CAN testing procedure described in the help page CAN Network 308.

© 2026 JCB INDIA LTD

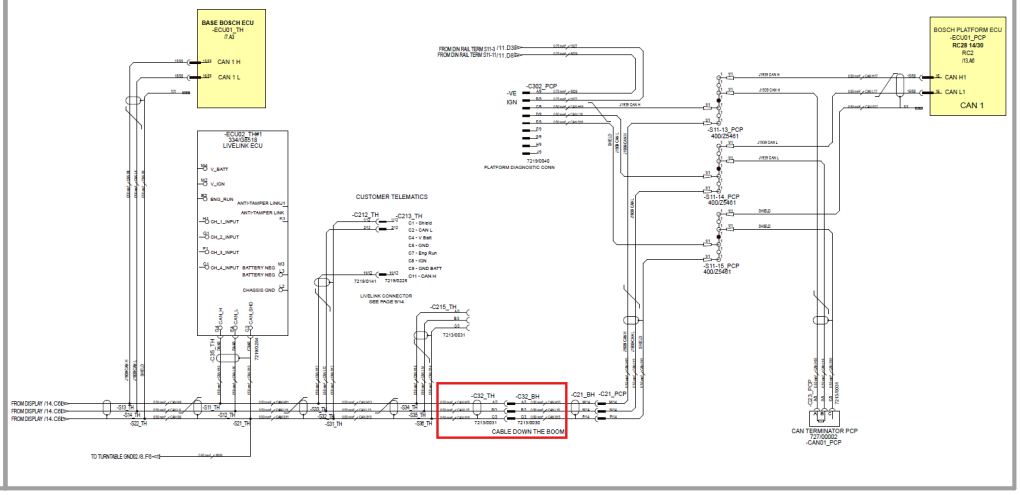

5.1.318 U1299-87

Error code:	U1299-87
ECU	BASE ECU
Description:	CAN PAIRING FAILED ERROR
Component:	BASE ECU
Vehicle reaction:	Recipient ignores received CAN message and transmits DM1 with SPN field = PGN of CAN message and FMI = 2 Recipient resets RC (rolling counter) to 0 Transmitter re-transmits CAN message requested by Recipient with RC set to 0.
Possible Cause:	1) Mismatched or un programmed VIN number in either Bosch ECU 2) Unterminated CAN network 3) Damaged CAN network 4) Poorly connected CAN network 5) Water Ingress
Service Action:	Check for Other Fault Codes

© 2026 JCB INDIA LTD

	• Scan for any additional fault codes that could prevent ECU activation (e.g., Startlock).
	• If present, resolve those first before proceeding.
	
	Verify ECU Availability
	• Use Flash Loader Tool to scan the network:
	  ○ Confirm Base ECU and Platform ECU are visible.
	• Use Vehicle Setup Tool for further checks.
	
	JCB Service Master Setup
	• Connect via JCB Service Master.
	• Run Vehicle Setup:
	  ○ Ensure VIN number displays in green.
	  ○ Confirm CAN Bus devices have paired successfully.
	
	CAN Bus Resistance Check
	• Turn Ignition OFF.
	• Remove Livelink Connector from Livelink ECU.
	• Remove CAN terminator at base platform.
	• Measure resistance between CAN-L and CAN-H on harness connector:
	  ○ Expected: 120 Ω.
	  ○ ≈0 Ω → Short circuit on CAN bus.
	  ○ High reading → Break in CAN bus wiring.
	• To isolate:
	  ○ Replace CAN terminator.
	  ○ Disconnect CAN interconnect at C32_TH / C32_BH.
	  ○ Measure resistance on each connector:
	  ▪ Low reading → Faulty section.
	  ▪ High reading → Break in wiring.
	• Perform continuity testing to pinpoint fault.
	
	Harness & Connector Inspection
	• Check CAN bus wiring for:
	  ○ Abrasion
	  ○ Pinching

© 2026 JCB INDIA LTD

	○ Cuts • Inspect all CAN device connectors (ECUs, displays, interconnects) for: ○ Damage ○ Water ingress ○ Bent or backed-out pins ○ Proper insertion Final Checks • Ensure all connectors are: ○ Fully seated ○ Free from moisture ○ Correctly terminated CAN Connection ○ Complete the CAN testing procedure described in the help page CAN Network 308. 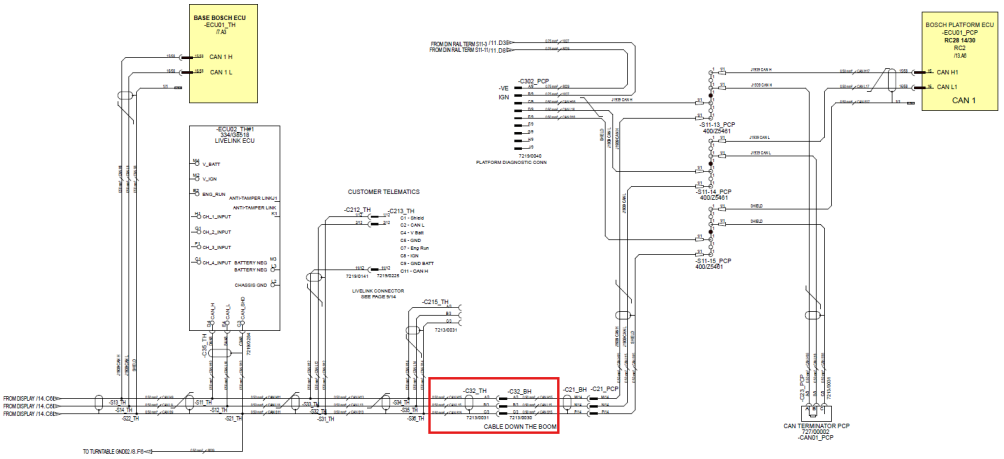

5.1.319 U1323-56

Error code:	U1323-56
ECU	Base ECU
Description:	CAN RC ERROR

© 2026 JCB INDIA LTD

Component:	ECU
Vehicle reaction:	Recipient ignores received CAN message and transmits DM1 with SPN field = PGN of CAN message and FMI = 10 Recipient retains existing values. Recipient resets RC (rolling counter) to 0 Transmitter re-transmits CAN message requested by Recipient with RC set to 0.
Possible Cause:	1. Mismatched or un programmed VIN number in either Bosch ECU 2. Unterminated CAN network 3. Damaged CAN network 4. Poorly connected CAN network 5. Water Ingress
Service Action:	1. Connect to the machine via JCB Service Master and run the 'Vehicle Setup' tool. Ensure that the VIN number is displayed in Green and that the CAN Bus devices have paired successfully. 2. Check both can terminator resistors are placed correctly at either end of the CAN network (at base and platform control panels). Turn Ignition to OFF and remove Livelink Connector from Livelink ECU. Remove the CAN terminator at the base platform and then measure the resistance of CAN-L to CAN-H on the harness connector. This should measure 120 ohms. Measuring a value close to 0 ohms will indicate a short circuit on the CAN

© 2026 JCB INDIA LTD

	bus. To narrow down the fault location, replace the CAN terminator and then disconnect the CAN bus interconnect at -C32_TH / -C32_BH. Measure the resistance of the CAN bus on each connector, the one that reads low will be the section with the short circuit. If the original measurement was a high reading, then there is a break in the CAN bus wiring. Again, section up the CAN Bus network and complete continuity testing to isolate the faulty section. 3. Check the CAN bus wiring runs to check for damage to the harness, especially abrasions and pinching. Check there is no damage at any of the CAN device connectors (Interconnects and ECU's / Displays etc) 4. Ensure all interconnects and device connectors are fully inserted. 5. Ensure all interconnects and device connectors have no water ingress issues. 6. Complete the CAN testing procedure described in the help page CAN Network 308.

© 2026 JCB INDIA LTD

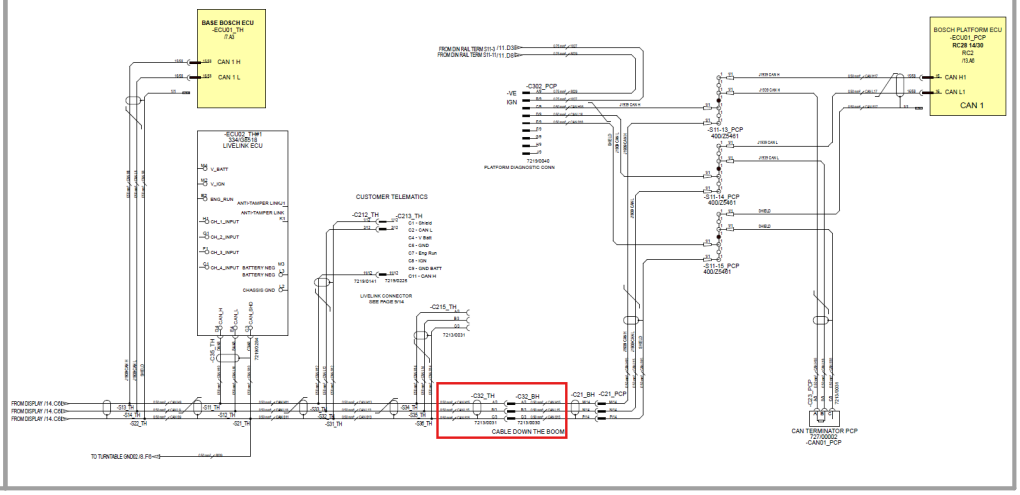

5.1.320 U1324-56

Error code:	U1324-56
ECU	Base ECU
Description:	CAN RC ERROR
Component:	ECU
Vehicle reaction:	Recipient ignores received CAN message and transmits DM1 with SPN field = PGN of CAN message and FMI = 10 Recipient retains existing values. Recipient resets RC (rolling counter) to 0 Transmitter re-transmits CAN message requested by Recipient with RC set to 0.
Possible Cause:	1. Mismatched or un programmed VIN number in either Bosch ECU 2. Unterminated CAN network 3. Damaged CAN network 4. Poorly connected CAN network 5. Water Ingress

© 2026 JCB INDIA LTD

Service Action:	1. Connect to the machine via JCB Service Master and run the 'Vehicle Setup' tool. Ensure that the VIN number is displayed in Green and that the CAN Bus devices have paired successfully. 2. Check both can terminator resistors are placed correctly at either end of the CAN network (at base and platform control panels). Turn Ignition to OFF and remove Livelink Connector from Livelink ECU. Remove the CAN terminator at the base platform and then measure the resistance of CAN-L to CAN-H on the harness connector. This should measure 120 ohms. Measuring a value close to 0 ohms will indicate a short circuit on the CAN bus. To narrow down the fault location, replace the CAN terminator and then disconnect the CAN bus interconnect at -C32_TH / -C32_BH. Measure the resistance of the CAN bus on each connector, the one that reads low will be the section with the short circuit. If the original measurement was a high reading, then there is a break in the CAN bus wiring. Again, section up the CAN Bus network and complete continuity testing to isolate the faulty section. 3. Check the CAN bus wiring runs to check for damage to the harness, especially abrasions and pinching. Check there is no damage at any of the CAN device connectors (Interconnects and ECU's / Displays etc) 4. Ensure all interconnects and device connectors are fully inserted. 5. Ensure all interconnects and device connectors have no water ingress issues. 6. Complete the CAN testing procedure described in the help page CAN Network 308.

© 2026 JCB INDIA LTD

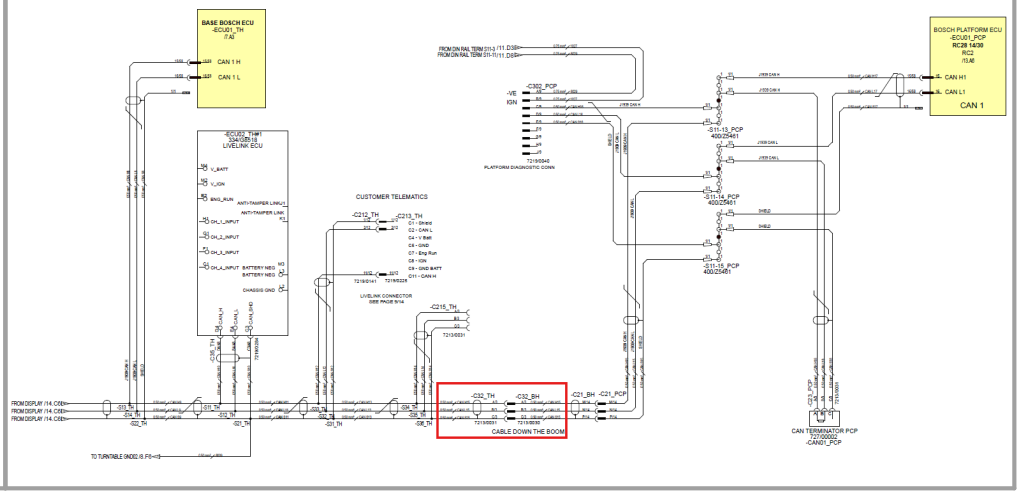

5.1.321 U1325-56

Error code:	U1325-56
ECU	Base ECU
Description:	CAN RC ERROR
Component:	ECU
Vehicle reaction:	Recipient ignores received CAN message and transmits DM1 with SPN field = PGN of CAN message and FMI = 10 Recipient retains existing values. Recipient resets RC (rolling counter) to 0 Transmitter re-transmits CAN message requested by Recipient with RC set to 0.
Possible Cause:	1. Mismatched or un programmed VIN number in either Bosch ECU 2. Unterminated CAN network 3. Damaged CAN network 4. Poorly connected CAN network 5. Water Ingress

© 2026 JCB INDIA LTD

Service Action:	1. Connect to the machine via JCB Service Master and run the 'Vehicle Setup' tool. Ensure that the VIN number is displayed in Green and that the CAN Bus devices have paired successfully. 2. Check both can terminator resistors are placed correctly at either end of the CAN network (at base and platform control panels). Turn Ignition to OFF and remove Livelink Connector from Livelink ECU. Remove the CAN terminator at the base platform and then measure the resistance of CAN-L to CAN-H on the harness connector. This should measure 120 ohms. Measuring a value close to 0 ohms will indicate a short circuit on the CAN bus. To narrow down the fault location, replace the CAN terminator and then disconnect the CAN bus interconnect at -C32_TH / -C32_BH. Measure the resistance of the CAN bus on each connector, the one that reads low will be the section with the short circuit. If the original measurement was a high reading, then there is a break in the CAN bus wiring. Again, section up the CAN Bus network and complete continuity testing to isolate the faulty section. 3. Check the CAN bus wiring runs to check for damage to the harness, especially abrasions and pinching. Check there is no damage at any of the CAN device connectors (Interconnects and ECU's / Displays etc) 4. Ensure all interconnects and device connectors are fully inserted. 5. Ensure all interconnects and device connectors have no water ingress issues. 6. Complete the CAN testing procedure described in the help page CAN Network 308.

© 2026 JCB INDIA LTD

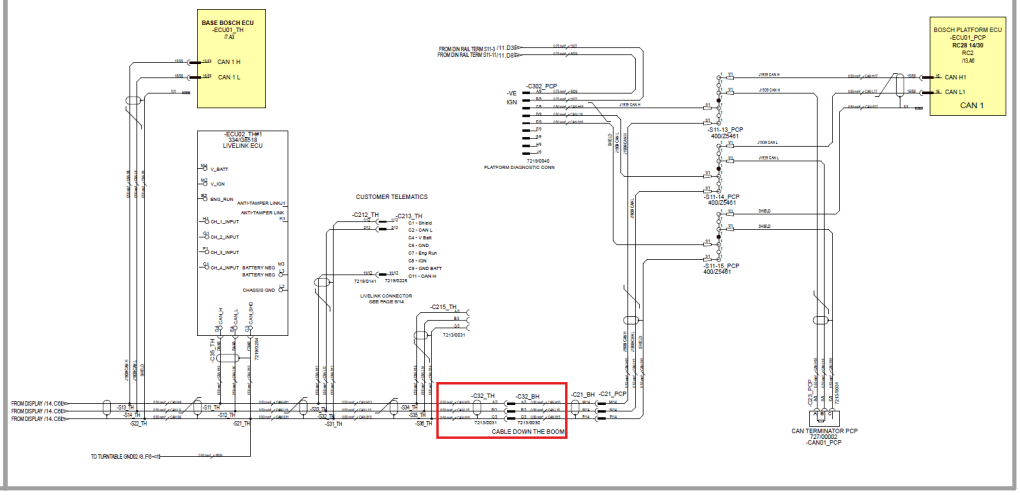

5.1.322 U1326-41

Error code:	U1326-41
ECU	Base ECU
Description:	CAN CHECK SUM ERROR
Component:	ECU
Vehicle reaction:	Recipient ignores received CAN message and transmits DM1 with SPN field = PGN of CAN message and FMI = 2 Recipient retains existing values. Recipient resets RC (rolling counter) to 0 Transmitter re-transmits CAN message requested by Recipient with RC set to 0.
Possible Cause:	1. Mismatch between transmitting and receiving message between ECU's
Service Action:	1. Connect to the machine via JCB Service Master and run the 'Vehicle Setup' tool. Ensure that the VIN number is displayed in Green and that the

© 2026 JCB INDIA LTD

	CAN Bus devices have paired successfully. 2. Check both can terminator resistors are placed correctly at either end of the CAN network (at base and platform control panels). Turn Ignition to OFF and remove Livelink Connector from Livelink ECU. Remove the CAN terminator at the base platform and then measure the resistance of CAN-L to CAN-H on the harness connector. This should measure 120 ohms. Measuring a value close to 0 ohms will indicate a short circuit on the CAN bus. To narrow down the fault location, replace the CAN terminator and then disconnect the CAN bus interconnect at -C32_TH / -C32_BH. Measure the resistance of the CAN bus on each connector, the one that reads low will be the section with the short circuit. If the original measurement was a high reading, then there is a break in the CAN bus wiring. Again, section up the CAN Bus network and complete continuity testing to isolate the faulty section. 3. Check the CAN bus wiring runs to check for damage to the harness, especially abrasions and pinching. Check there is no damage at any of the CAN device connectors (Interconnects and ECU's / Displays etc) 4. Ensure all interconnects and device connectors are fully inserted. 5. Ensure all interconnects and device connectors have no water ingress issues.

© 2026 JCB INDIA LTD

	6. Complete the CAN testing procedure described in the help page CAN Network 308. 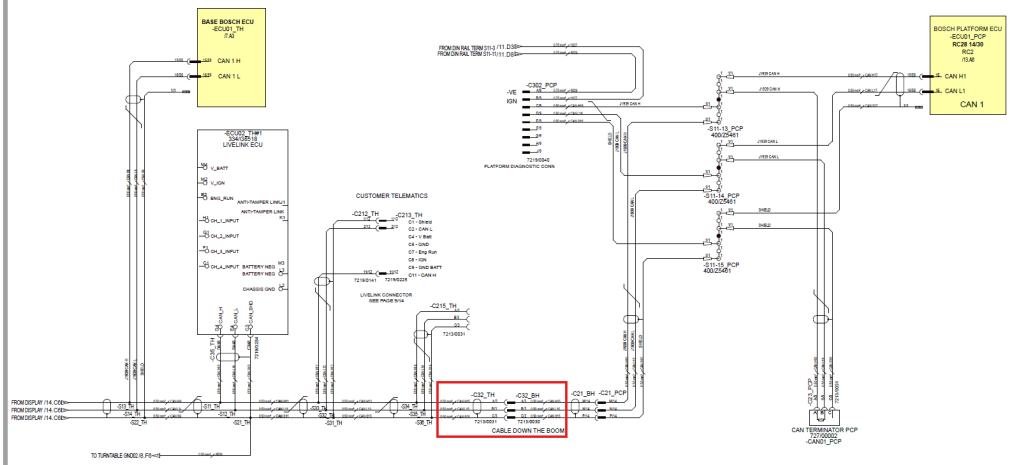

5.1.323 U1327-41

Error code:	U1327-41
ECU	Base ECU
Description:	CAN CHECK SUM ERROR
Component:	ECU
Vehicle reaction:	Recipient ignores received CAN message and transmits DM1 with SPN field = PGN of CAN message and FMI = 2 Recipient retains existing values. Recipient resets RC (rolling counter) to 0 Transmitter re-transmits CAN message requested by Recipient with RC set to 0.
Possible Cause:	1. Mismatch between transmitting and receiving message between ECU's

© 2026 JCB INDIA LTD

Service Action:	1. Connect to the machine via JCB Service Master and run the 'Vehicle Setup' tool. Ensure that the VIN number is displayed in Green and that the CAN Bus devices have paired successfully. 2. Check both can terminator resistors are placed correctly at either end of the CAN network (at base and platform control panels). Turn Ignition to OFF and remove Livelink Connector from Livelink ECU. Remove the CAN terminator at the base platform and then measure the resistance of CAN-L to CAN-H on the harness connector. This should measure 120 ohms. Measuring a value close to 0 ohms will indicate a short circuit on the CAN bus. To narrow down the fault location, replace the CAN terminator and then disconnect the CAN bus interconnect at -C32_TH / -C32_BH. Measure the resistance of the CAN bus on each connector, the one that reads low will be the section with the short circuit. If the original measurement was a high reading, then there is a break in the CAN bus wiring. Again, section up the CAN Bus network and complete continuity testing to isolate the faulty section. 3. Check the CAN bus wiring runs to check for damage to the harness, especially abrasions and pinching. Check there is no damage at any of the CAN device connectors (Interconnects and ECU's / Displays etc) 4. Ensure all interconnects and device connectors are fully inserted. 5. Ensure all interconnects and device connectors have no water ingress issues. 6. Complete the CAN testing procedure described in the help page CAN Network 308.

© 2026 JCB INDIA LTD

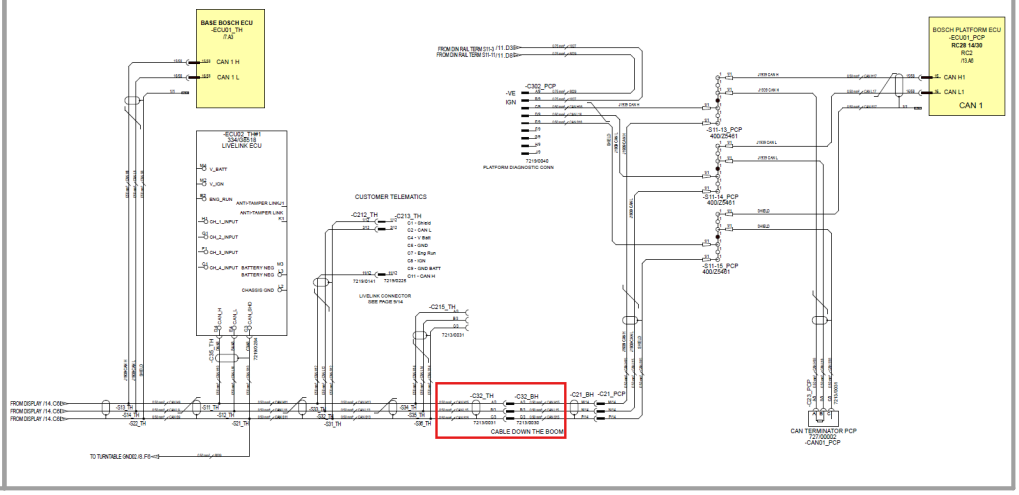

5.1.324 U1328-41

Error code:	U1328-41
ECU	Base ECU
Description:	CAN CHECK SUM ERROR
Component:	ECU
Vehicle reaction:	Recipient ignores received CAN message and transmits DM1 with SPN field = PGN of CAN message and FMI = 2 Recipient retains existing values. Recipient resets RC (rolling counter) to 0 Transmitter re-transmits CAN message requested by Recipient with RC set to 0.
Possible Cause:	1. Mismatch between transmitting and receiving message between ECU's
Service Action:	1. Connect to the machine via JCB Service Master and run the 'Vehicle Setup' tool. Ensure that the VIN number is displayed in Green and that the

© 2026 JCB INDIA LTD

CAN Bus devices have paired successfully.

2. Check both can terminator resistors are placed correctly at either end of the CAN network (at base and platform control panels). Turn Ignition to OFF and remove Livelink Connector from Livelink ECU. Remove the CAN terminator at the base platform and then measure the resistance of CAN-L to CAN-H on the harness connector. This should measure 120 ohms. Measuring a value close to 0 ohms will indicate a short circuit on the CAN bus. To narrow down the fault location, replace the CAN terminator and then disconnect the CAN bus interconnect at -C32_TH / -C32_BH. Measure the resistance of the CAN bus on each connector, the one that reads low will be the section with the short circuit. If the original measurement was a high reading, then there is a break in the CAN bus wiring. Again, section up the CAN Bus network and complete continuity testing to isolate the faulty section.

3. Check the CAN bus wiring runs to check for damage to the harness,

especially abrasions and pinching. Check there is no damage at any of the

CAN device connectors (Interconnects and ECU's / Displays etc)

4. Ensure all interconnects and device connectors are fully inserted.

5. Ensure all interconnects and device connectors have no water ingress

issues.

6. Complete the CAN testing procedure described in the help page CAN Network 308.

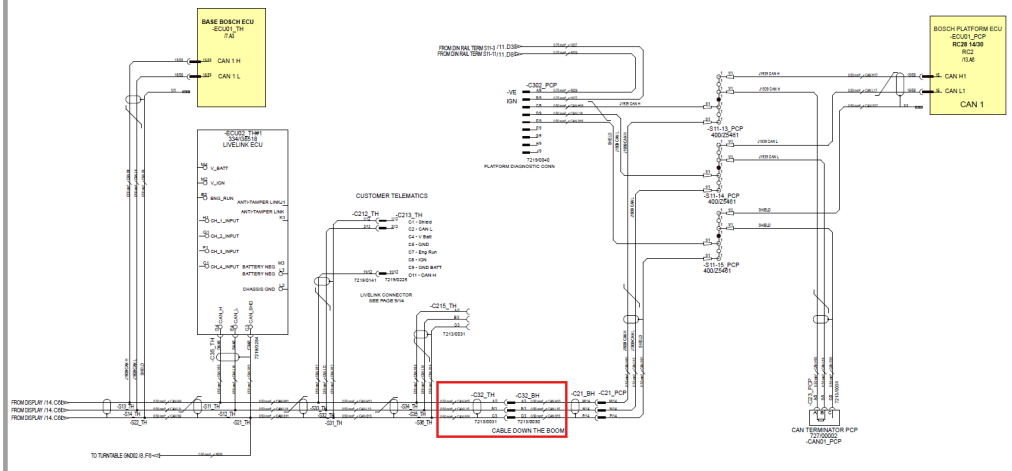

© 2026 JCB INDIA LTD

5.1.325 U1900-16

Error code:	U1900-16
ECU	Livelink ECU
Description:	LIVELINK - VEHICLE VOLTAGE BELOW NORMAL
Component:	Livelink
Vehicle reaction:	No instrument cluster notification or buzzer for this fault code.
Possible Cause:	This fault occurs when the Livelink ECU detects the machine battery voltage has dropped below 8V on a 12V Machine.
Service Action:	Important: Stop the engine and do not start the engine during the service procedures. 1. Check the power supply to the Livelink ECU on the connector. Pin 4 is battery positive and pin 5 is battery ground. If battery voltage is dropped below 8V on a 12V Machine then go to step 2 else step 3 2. Check the state of the machine battery and wiring, if Machine voltage is < 8 replace battery and check or else go to step 3 3. If there is no problem found with the wiring, Livelink ECU may need to be replaced. Contact service center

© 2026 JCB INDIA LTD

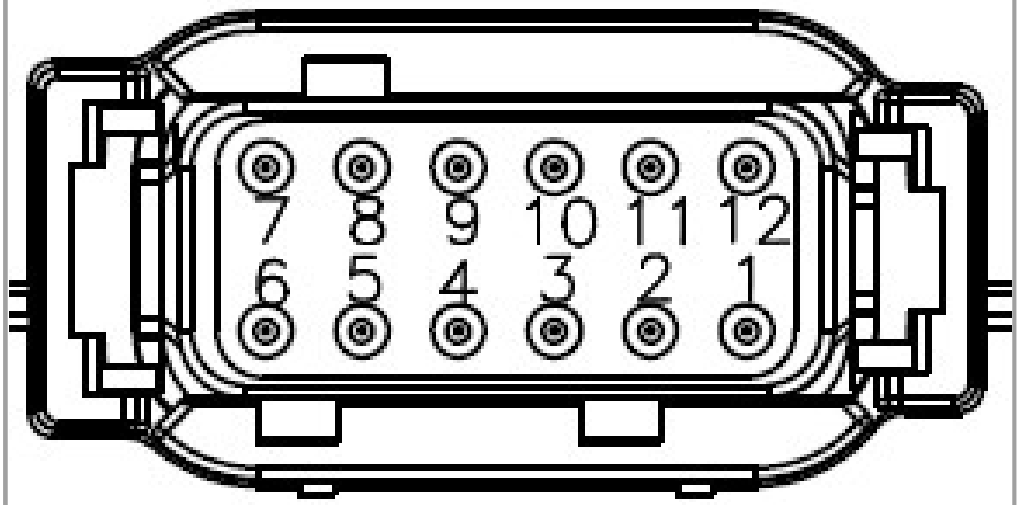

5.1.326 U1901-16

Error code:	U1901-16
ECU	Livelink ECU
Description:	LIVELINK - INTERNAL VOLTAGE BELOW NORMAL
Component:	Livelink
Vehicle reaction:	No instrument cluster notification or buzzer for this fault code.
Possible Cause:	The Livelink ECU has detected its internal voltage has dropped below 3V.
Service Action:	Important: Stop the engine and do not start the engine during the service procedures. 1. Check the power supply to the Livelink ECU on the connector. Pin 4 is battery positive and pin 5 is battery ground. If battery voltage is dropped below 8V on a 12V Machine then go to step 2 else step 3 2. Check the state of the machine battery and wiring, if Machine voltage is < 8 replace battery and check or else go to step 3

© 2026 JCB INDIA LTD

	3. If there is no problem found with the wiring or Machine Battery Voltage, Livelink ECU may need to be replaced. Contact service center

5.1.327 U1904-85

Error code:	U1904-85
ECU	Livelink ECU
Description:	LIVELINK - ECU ABOVE TEMPERATURE THRESHOLD
Component:	Livelink
Vehicle reaction:	No instrument cluster notification or buzzer for this fault code.
Possible Cause:	The Livelink ECU internal temperature has been greater than 940C for more than two minutes.
Service Action:	Important: Stop the engine and do not start the engine during the service procedures. 1. Confirm if the Livelink ECU is still communicating with the web and/or connecting to ServiceMaster. 2. If the Livelink ECU has stopped reporting it may need to be replaced. Contact service center.

5.1.328 U1905-84

Error code:	U1905-84
ECU	Livelink ECU
Description:	LIVELINK - ECU BELOW TEMPERATURE THRESHOLD
Component:	Livelink
Vehicle reaction:	No instrument cluster notification or buzzer for this fault code.

© 2026 JCB INDIA LTD

Possible Cause:	ECU Below Temperature Threshold. The Livelink ECU internal temperature has been greater than 94oC for more than two minutes.
Service Action:	1.Confirm if the Livelink ECU is still communicating with the web and/or connecting to ServiceMaster. 2.If the Livelink ECU has stopped reporting it may need to be replaced.

5.1.329 U1906-96

Error code:	**U1906-96**
ECU	Livelink ECU
Description:	LIVELINK - ACCELEROMETER INTERNAL FAILURE
Component:	Livelink
Vehicle reaction:	No instrument cluster notification or buzzer for this fault code.
Possible Cause:	The accelerometer in the Livelink ECU is no longer working as expected.
Service Action:	Important: Stop the engine and do not start the engine during the service procedures 1. The Livelink ECU may need to be replaced. Contact service center.

5.1.330 U1907-09

Error code:	**U1907-09**
ECU	Livelink ECU
Description:	LIVELINK - MODEM JAMMED
Component:	Livelink
Vehicle reaction:	No instrument cluster notification or buzzer for this fault code.

© 2026 JCB INDIA LTD

Possible Cause:	The tracking unit has detected that an attempt has been made to prevent it connecting to the GPRS network by a jamming device.
Service Action:	Important: Stop the engine and do not start the engine during the service procedures. 1. Check surrounding for any Modem Device. This fault should clear once the jamming device is no longer present. Go to step 2 if issue is still present. 2. The Livelink ECU may need to be replaced. Contact service center.

5.1.331 U1908-09

Error code:	**U1908-09**
ECU	Livelink ECU
Description:	LIVELINK - GPS ANTENNA NOT OK
Component:	Livelink
Vehicle reaction:	No instrument cluster notification or buzzer for this fault code.
Possible Cause:	The Livelink ECU has detected that the GPS antenna is open circuit or short circuit.
Service Action:	Important: Stop the engine and do not start the engine during the service procedures. 1. Check if the Livelink ECU has obtained a GPS fix using the Livelink ECU diagnostics tool in ServiceMaster. Note: It may take up to 5 minutes for the Livelink ECU to obtain a GPS fix after start up. The unit’s ability to achieve a GPS fix is environment dependent. Working indoors and around tall buildings will degrade GPS performance.

© 2026 JCB INDIA LTD

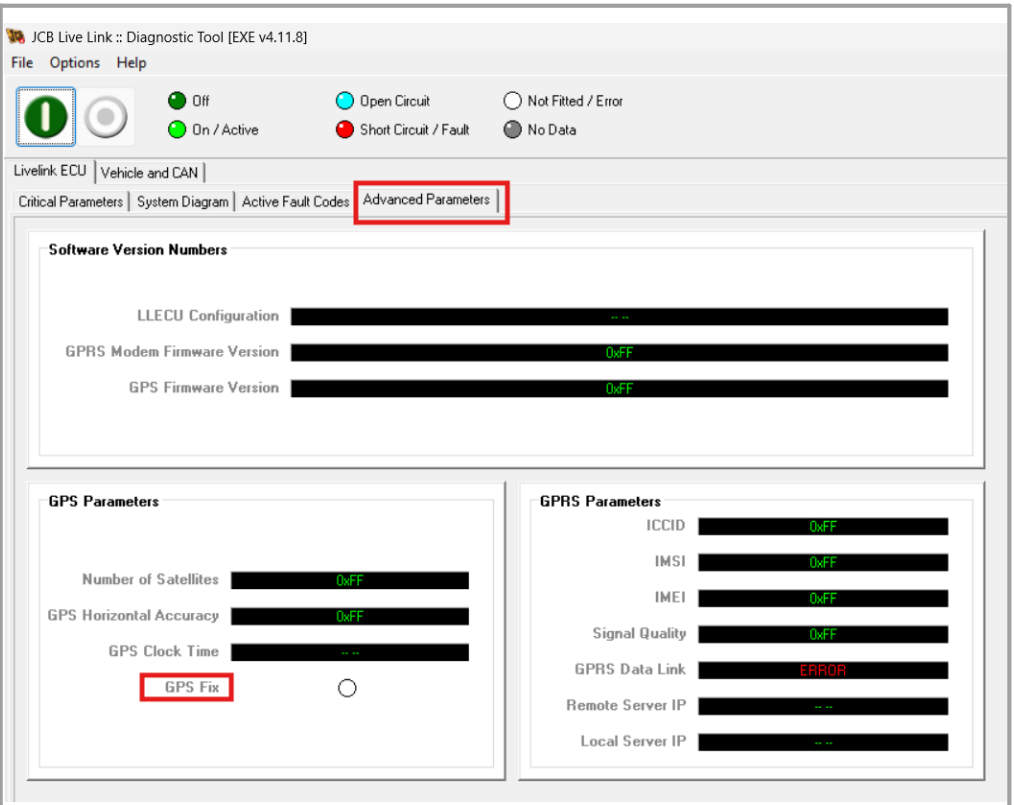

2. If the Livelink ECU has not had a fix or updated its location shown on the web for an

extended period of time then go to step 3.

3. The Livelink ECU may need to be replaced. Contact service center.

5.1.332 U1909-96

Error code:	U1909-96
ECU	Livelink ECU
Description:	LIVELINK - NO COMMS WITH GPS MODULE
Component:	Livelink
Vehicle reaction:	No instrument cluster notification or buzzer for this fault code.
Possible Cause:	The tracking unit cannot communicate with the GPS chip.

© 2026 JCB INDIA LTD

Service Action:	Important: Stop the engine and do not start the engine during the service procedures. 1. Check if the Livelink ECU has obtained a GPS fix using the Livelink ECU diagnostics tool in ServiceMaster. Note: It may take up to 5 minutes for the Livelink ECU to obtain a GPS fix after start up. The unit's ability to achieve a GPS fix is environment dependent. Working indoors and around tall buildings will degrade GPS performance. 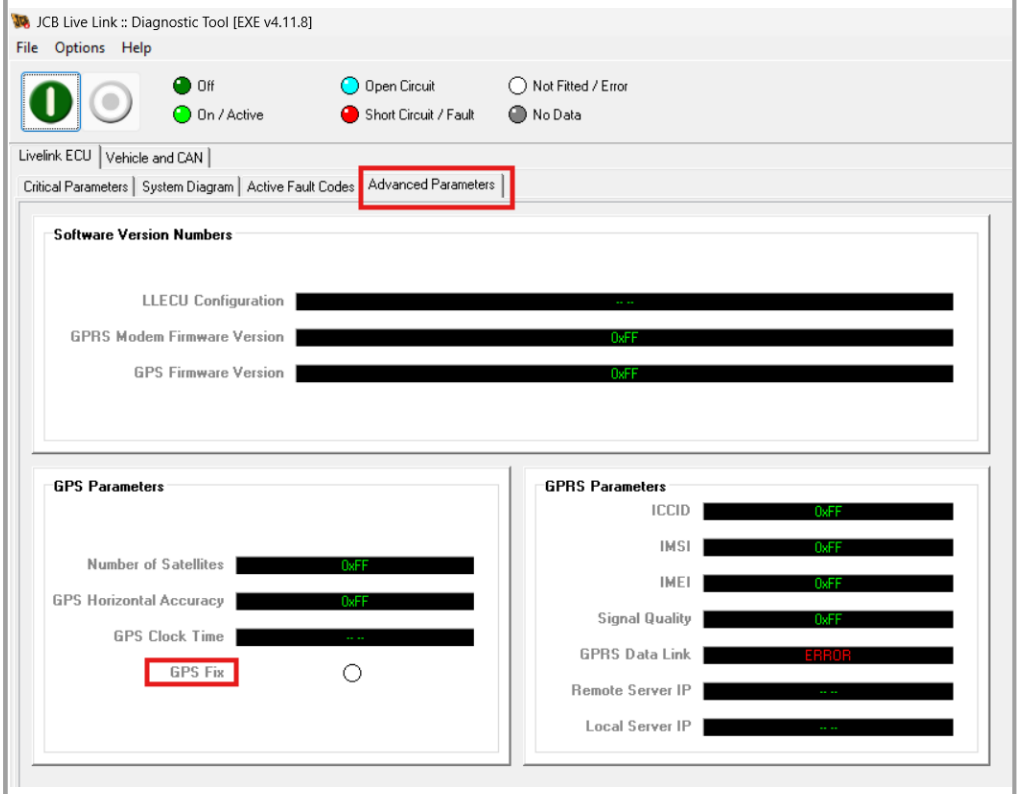 2. If the Livelink ECU has not had a fix or updated its location shown on the web for an extended period of time then go to step 3. 3. The Livelink ECU may need to be replaced. Contact service center.

5.1.333 U190A-09

Error code:	**U190A-09**
ECU	Livelink ECU

© 2026 JCB INDIA LTD

Description:	SIM Card Failure
Component:	Livelink ECU
Vehicle reaction:	No cluster notification or buzzer for this fault code
Possible Cause:	SIM Card Failure. The LL ECU has detected that the SIM card is not working as expected
Service Action:	Important: Stop the engine and do not start the engine during the service procedures. 1.Check the last connection date/time for the machine on the web. If the unit has not made contact for an extended period of time the Livelink ECU may need to be replaced. Please follow MI1048 and MI1049 for the correct process. Note: the LL ECU uses GPRS to communicate with the web. If coverage in the area the machine is working in is poor or not available it will not be able to report in its events. It will store these events and report them once a network connection is restored. 2. The Livelink ECU may need to be replaced. Contact service center.

5.1.334 U190B-96

Error code:	**U190B-96**
ECU	Livelink ECU
Description:	LIVELINK - NO COMMS WITH GSM MODULE
Component:	Livelink
Vehicle reaction:	No instrument cluster notification or buzzer for this fault code.
Possible Cause:	The Livelink ECU cannot communicate with the modem so will not be able to report events to the web.
Service Action:	Important: Stop the engine and do not start the engine during the service procedures.

© 2026 JCB INDIA LTD

	1. Check the network connection state using the LiveLink diagnostics tool. If the unit has not made contact for an extended period of time then go to step 2 Note: This fault will recover once the Livelink ECU can connect to a cell site. 2. The Livelink ECU may need to be replaced. Contact service center. 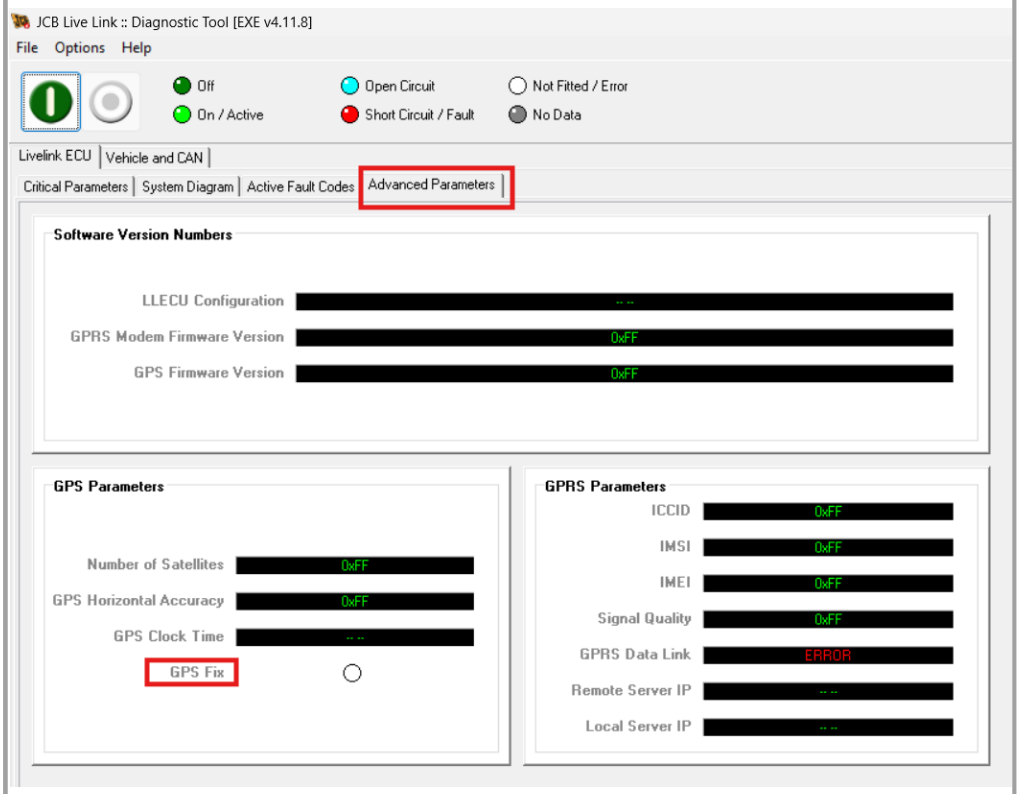

5.1.335 U190C-96

Error code:	U190C-96
ECU	Livelink ECU
Description:	LIVELINK - GSM NETWORK REGISTRATION FAILED
Component:	Livelink
Vehicle reaction:	No instrument cluster notification or buzzer for this fault code.

© 2026 JCB INDIA LTD

Possible Cause:	The GPRS cell site/mast has refused the Livelink ECU's request to connect.
Service Action:	Important: Stop the engine and do not start the engine during the service procedures. 1. Check the network connection state using the LiveLink diagnostics tool. If the unit has not made contact for an extended period of time then go to step 2. 2. The Livelink ECU may need to be replaced. Contact service center. 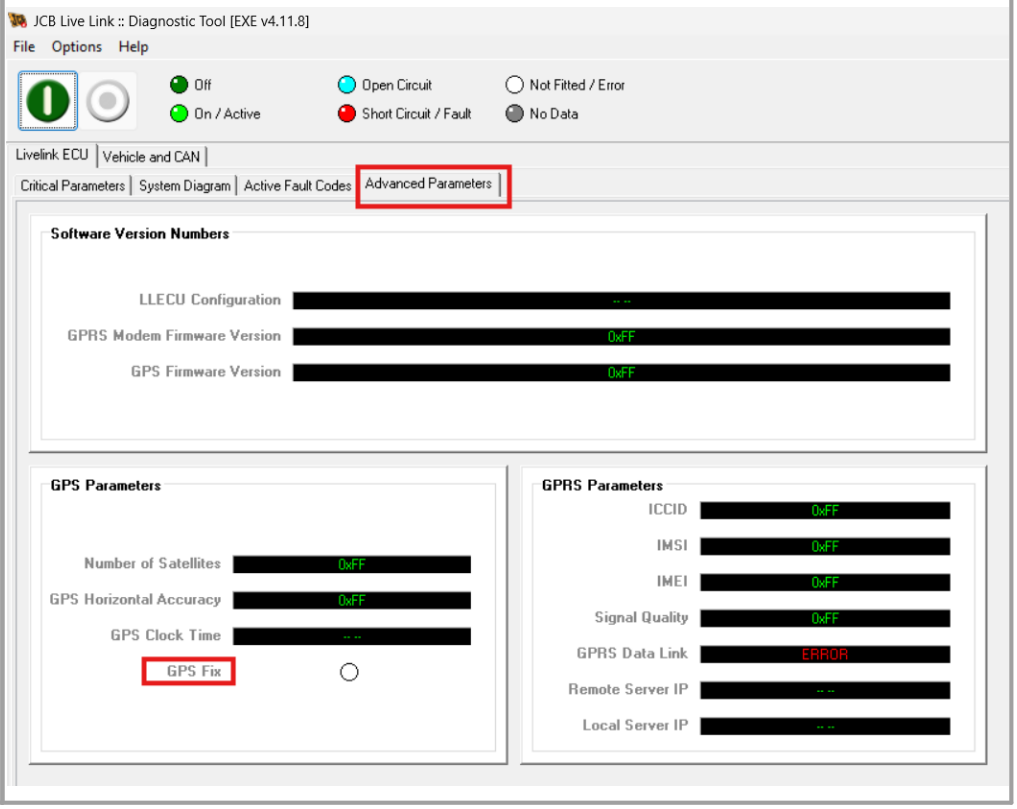

5.2 General Sensor Fault Table (2)



List of General Sensor Fault Table 955

© 2026 JCB INDIA LTD

Sr No.	Component
1	General Sensor Fault Table 956

5.2.1 General Sensor Fault Table (2)

General Sensor Fault Table

General Sensor Fault Table > General Sensor Fault Table

Step	Trouble	Action
1	Sensor supply voltage fault	Disconnect the sensor, check sensor voltage supply at the harness connector (see relevant sensor help file for pin numbers or refer to engine electrical schematic) If voltage supply is faulty, disconnect all other sensors in turn until the voltage supply returns. If sensor supply voltage is OK, proceed to Step 2
2	Sensor connection faulty	Check condition of sensor to harness connection, make sure the seals are in place. Check for signs of corrosion or contamination. Repair/replace as necessary. If no fault is found, proceed to Step 3.
3	Sensor failure	Check the sensor resistance (see relevant help file for values). If sensor is out of specification, replace. If no fault is found, proceed to Step 4
4	Wiring fault	Check the harness continuity, and machine and earth contacts. Repair/replace as necessary. If no fault is found, proceed to Step 5.

© 2026 JCB INDIA LTD

5	ECU fault	Disconnect the harness from the ECU and inspect. Check seals are in place, check for signs of corrosion and pin damage. If harness is damaged repair/replace as necessary. If ECU pins are damaged, replace ECU and Reflash, see section on ECU flashing. If no fault is found, raise a Tech web Help desk Call.

5.3 Fault Code Types

List of Fault Code Types 957

Sr Number	Component
1	Fault Code Types 957

5.3.1 Fault Code Types

- **Short Circuit to +**
- **Short Circuit to -**
- **Open Circuit**
- **No Signal**
- **Signal Out Of Range High**
- **Signal Out Of Range Low**
- **Signal Compare Failure**
- **Power Supply Over Voltage**
- **Uncommanded Motion**
- **Missing Calibration**
- **Missing**

Missing

This case is detected when:

- An ECU is offline or not communicating with the rest of the ECUs

© 2026 JCB INDIA LTD

Possible Causes

- ECU disconnected
- Loss of power input
- Loss of ground
- CAN fault
- New ECU installed

Basic Troubleshooting

1. Check power, ground, and CAN to the affected component per the CAN Troubleshooting guide.
2. Monitor the CAN Diagnostics tool in ServiceMaster to ensure that all ECUs are communicating immediately after the ignition key is turned on.
3. Monitor the CAN Diagnostics tool in ServiceMaster to ensure that all ECUs stop communicating within 20seconds after the ignition key is turned off.
4. If an ECU was replaced immediately before the fault occurred, ensure that the correct software file was loaded and that all ECUs have the same level of software. DO NOT flash software as an attempt to correct this fault if no ECU was replaced.

Short Circuit to +

This case is detected by an ECU when:

- An output is off and positive voltage is present at the pin of the ECU.
- An input signal is pushed (generally by short to outside source) to within 90% of battery voltage.

Possible Causes

- Loose or bent pins
- Exposed wires

© 2026 JCB INDIA LTD

- Faulty components
- Poorly performed prior repairs.

Basic Troubleshooting

1. Check ground connection, ensure it's clean and tight.
2. Check for any recent repairs to harness or components; if found verify quality repair.
3. Check for any accessories or add-on components. If found, verify quality installation. (No screws driven through harness, etc.)
4. Disconnect battery ground. Disconnect connector closest to power source, using caution to disturb harness as little as possible.
5. Refer to schematic, check for improper continuity between pins. If found, continue working connector by connector towards the ground until DMM reads OL or very high resistance.

Short Circuit to -

This case is detected by an ECU when:

- An output is on and too much current is drawn. The current threshold is usually around 2.5 amps.
- An input signal is pulled down (generally by short to ground wire or chassis) to below 0.3 volts.

Possible Causes

- Loose or bent pins
- Exposed wires
- Broken/poor grounds
- Faulty components
- Poorly performed prior repairs.

© 2026 JCB INDIA LTD

Basic Troubleshooting

1. Check ground connection, ensure it's clean and tight.
2. Disconnect the power source (battery), drain any residual voltage.
3. Disconnect the connector closest to the power source.
4. Connect one lead of the DMM to the correct pin and the other to a clean ground. Resistance should be close to 0Ω.
5. Disconnect the next connector, working towards the ground, until the DMM reads OL or very high resistance.
6. NOTE: A normally open switch or relay should be taken into account when performing troubleshooting.

Open Circuit

This case is detected by an ECU by:

- During the first 5 seconds after key on, each output is "pinged" (meaning a small voltage signal is sent down the line). If no current flows during this ping then the ECU knows that no load is connected.

Possible Causes

- Loose or broken pins
- Connectors disconnected.
- Broken wires
- Broken grounds

Basic Troubleshooting

1. Ensure battery voltage is reaching the first connection point. (Usually a fuse.) Ensure ground is clean and tight.
2. Make sure fuse isn't blown.
3. If fuse is good, measure voltage connection by connection towards the ground point until voltage is lost. The open should be between the the last two measured connections. (Ensure the circuit load is active and switches are closed.)

© 2026 JCB INDIA LTD

4. Alternatively, the fuse may be removed and circuit resistance may be measured until OL or very high resistance is found between two connections.

No Signal

This case is detected by an ECU when:

- During normal machine operation, no signal is received from a sensor.

Possible Causes

- Loose or broken pins
- Connectors disconnected.
- Broken wires
- Broken grounds

Signal Out Of Range High

This case is detected by an ECU when:

- An input signal increases to above it's upper operating limit.

Possible Causes

- Wiring fault
- Faulty Sensor

Signal Out Of Range Low

This case is detected by an ECU when:

- An input signal decreases to below it's lower operating limit.

Possible Causes

- Wiring fault

© 2026 JCB INDIA LTD

- Faulty Sensor

Signal Compare Failure

This case is detected by an ECU when:

- Two related signals should not both be on or off, and they are.

Possible Causes

- Wiring fault

Power Supply Over Voltage

This case is detected by an ECU when:

- The voltage applied to the power input is above ~16 volts.

Uncommanded Motion

This case is detected by an ECU when:

- No request for machine movement is being given to the solenoids yet the pump swash plate is moving - likely due to wheels/tracks are moving.

Missing Calibration

This case is detected by an ECU when:

- An ECU is brand new and necessary calibrations have not been performed.
- An ECU is offline.

Signal Inconsistent

This case is detected by an ECU when:

- The signal is received intermittently, irregularly, or outside of prescribed parameters.

© 2026 JCB INDIA LTD

- Or the signal received does not agree with other signals received.
- Or the signal is erratic.

© 2026 JCB INDIA LTD

This page is intentionally left blank.
Remove this text from the manual
template if you want it completely blank.

Machine Setup & Calibration

6 Machine Setup & Calibration

Software Flashing

This section is to describe the method for updating software on the machine.

Always ensure the platform and base ecu's are updated together to ensure the versions match.

The display software should always be aligned to the correct Bosch ecu software, please check before updating any files on a machine

List of Machine Setup & Calibration 966

Sr Number	Component
1	Machine Setup 966
2	Machine Calibration from Service Master 968
3	Machine Calibration from Display 970
4	Tilt Sensor Calibration 976
5	Flashing of Controller 979

6.1 Machine Setup

List of Machine Setup 966

Sr Number	Component
1	VIN Number 966

6.1.1 VIN Number

Overview

The VIN number of the machine is required to be entered into the machine ECU's.

This number is a 17 Digit number that is on the side of the machine.

© 2026 JCB INDIA LTD

The ECU's will require this number so the correct software can be configured correctly to the machine.

The ECU's from base & platform will also use this number to pair, this will ensure they are both from the same machine.

The VIN may only be entered through the USE of service-master.

Entering the VIN Number

Open JCB Servicemaster,

Open applicable product group and open the vehicle setup tool

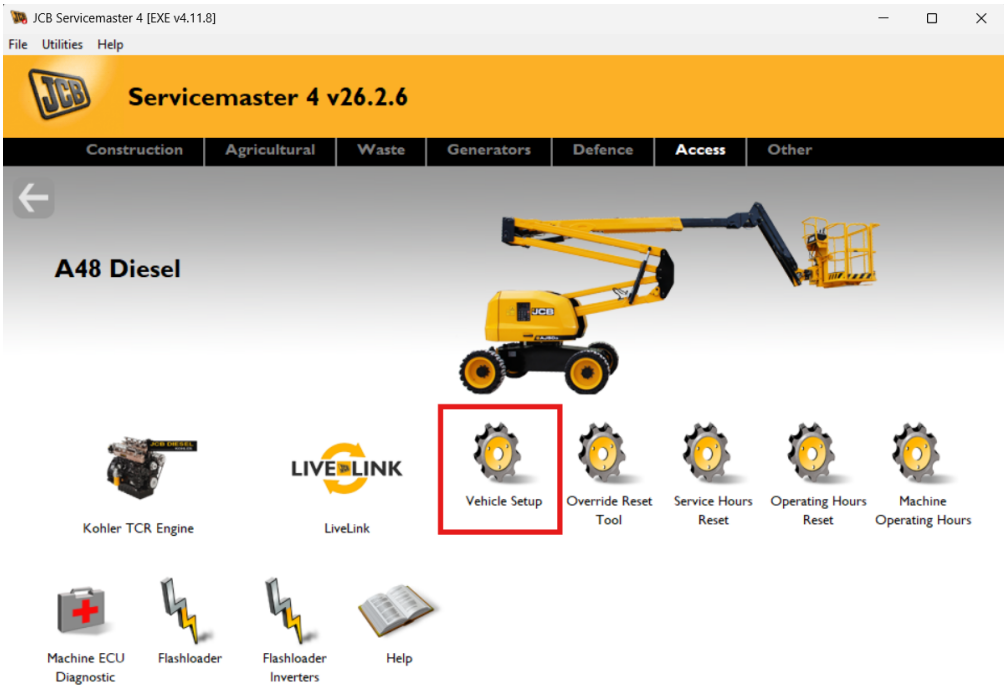

Enter the Vehicle VIN into the box and then press the write button.

Check the communication status and ensure the write process is complete before progressing or closing the tool.

© 2026 JCB INDIA LTD

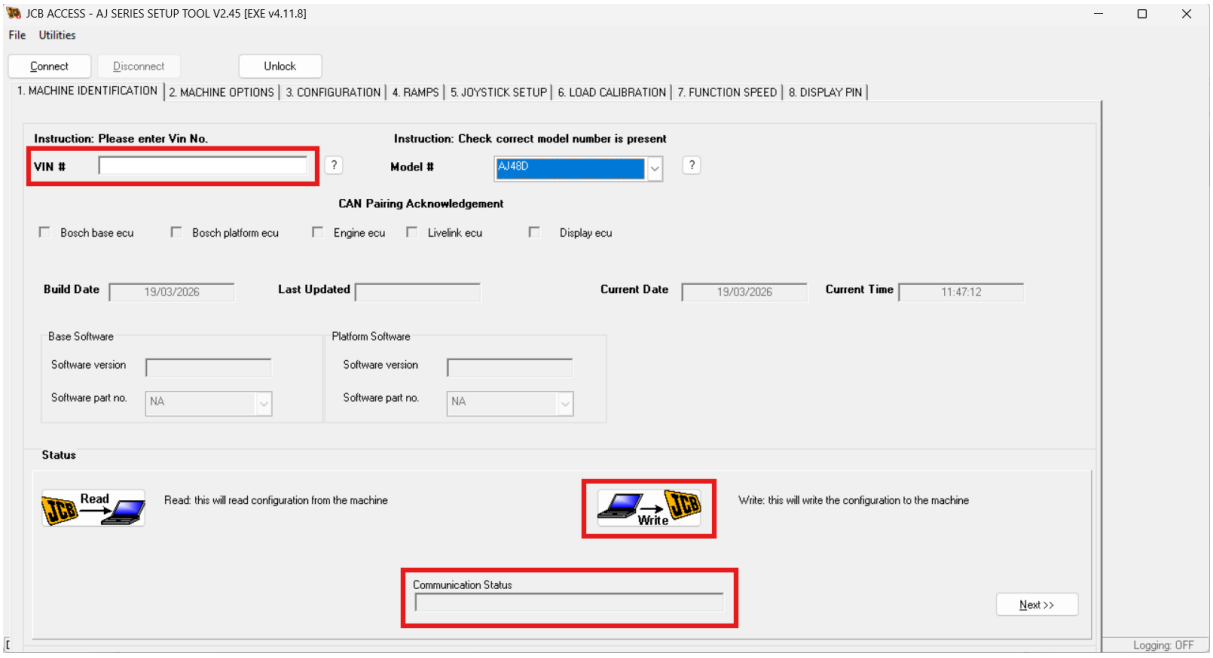

6.2 Machine Calibration from Service Master

List of Machine Calibration from Service Master 968

Sr Number	Component
1	Load Calibration 968

6.2.1 Load Calibration

Go to Service-master, Vehicle setup tool

© 2026 JCB INDIA LTD

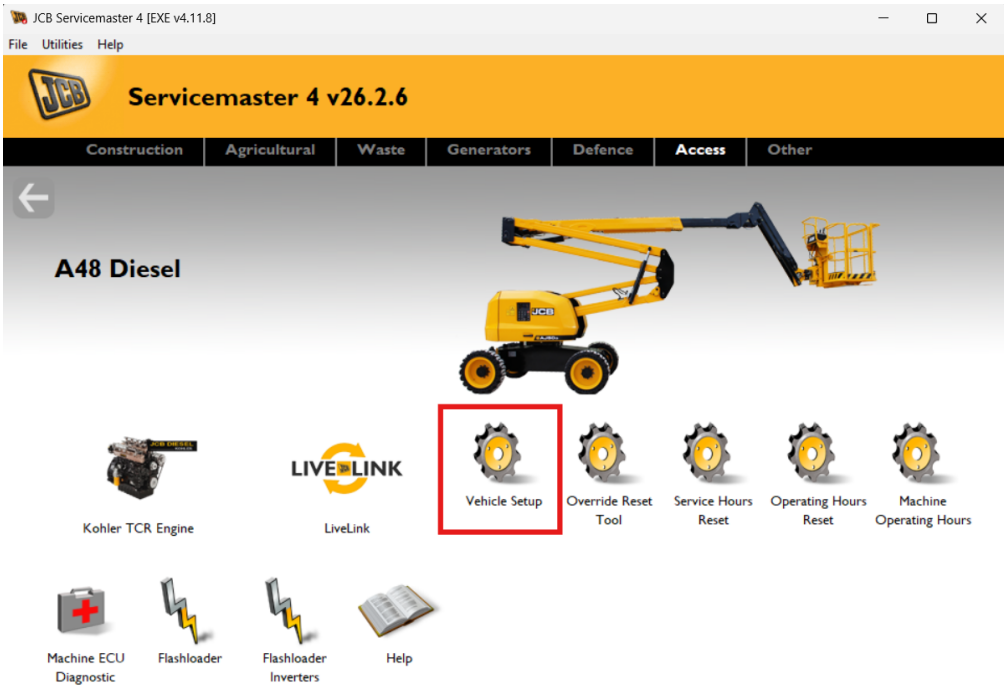

Connect to the machine and go to the load calibration tab

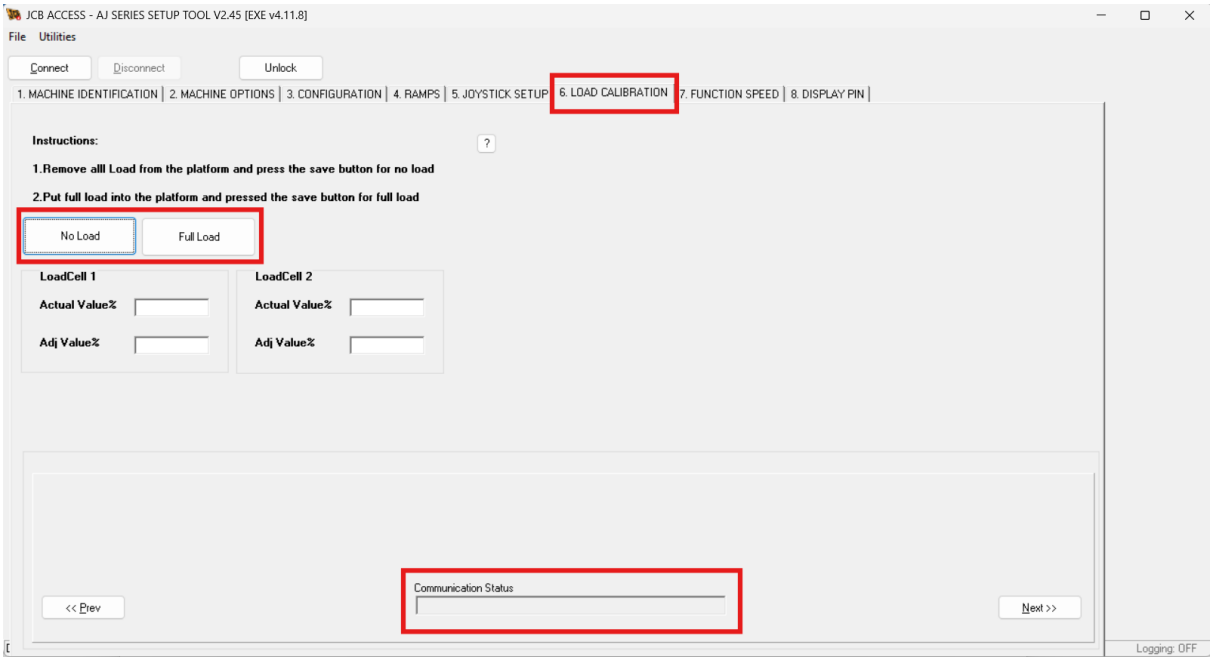

Ensure there is no weight in the platform and click the No load button, await for communication status to complete

Add 250Kg (550lbs) to the platform and click the Full load button, await for communication status to complete

© 2026 JCB INDIA LTD

6.3 Machine Calibration from Display

List of Machine Calibration from Display 970

Sr Number	Component
1	Known Load Calibration 970

6.3.1 Known Load Calibration

1. Navigate to 'Machine Settings' on the base control panel and select 'Load Cell Calibration'



2. Check the display for any message. If the message on the display is 'Calibration is not available', press 'Back' symbol to return to previous screen. Contact your JCB dealer for assistance.

© 2026 JCB INDIA LTD

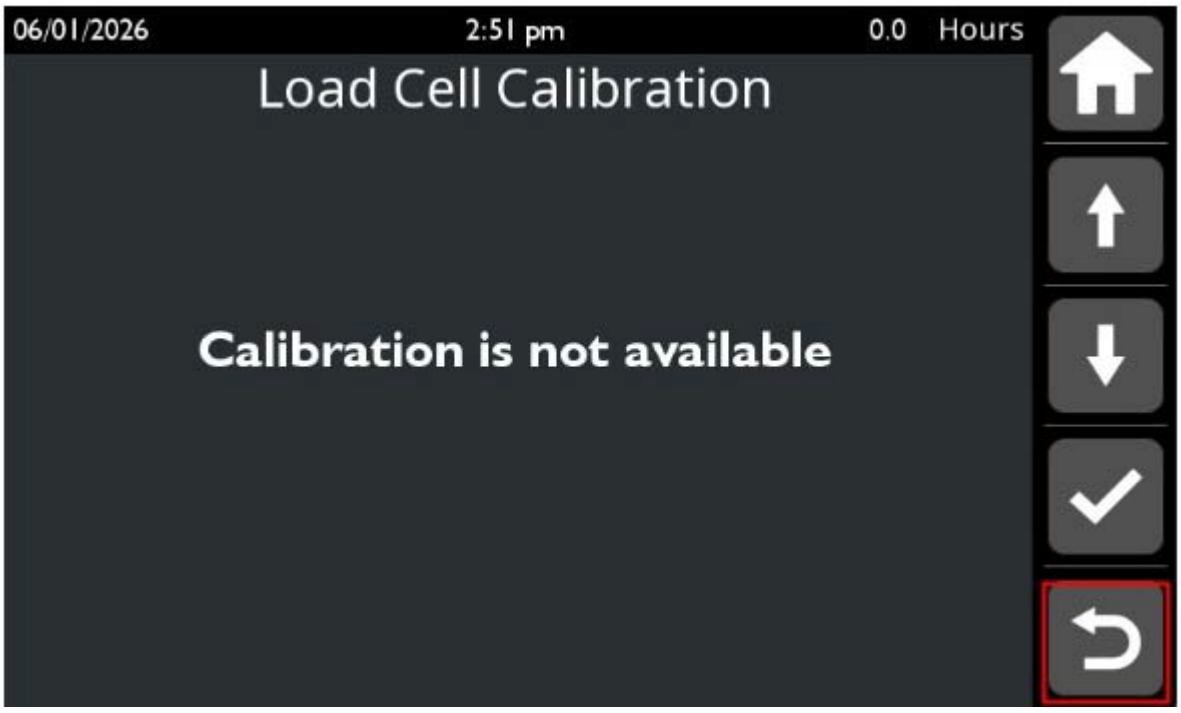

3. Make sure that the platform is empty, and all attachments or accessories are removed from the platform. Confirm this by pressing the 'Tick' symbol.

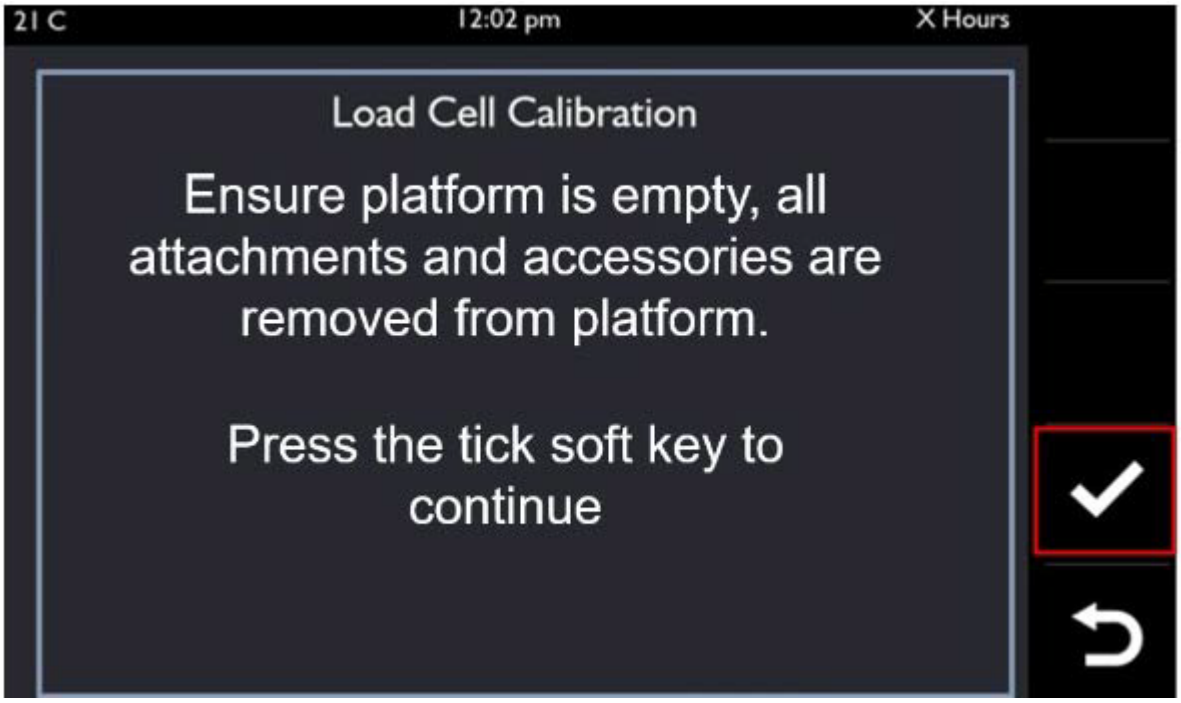

4. Wait for the specified duration for the system to store the empty platform values.
Duration: 5s

© 2026 JCB INDIA LTD

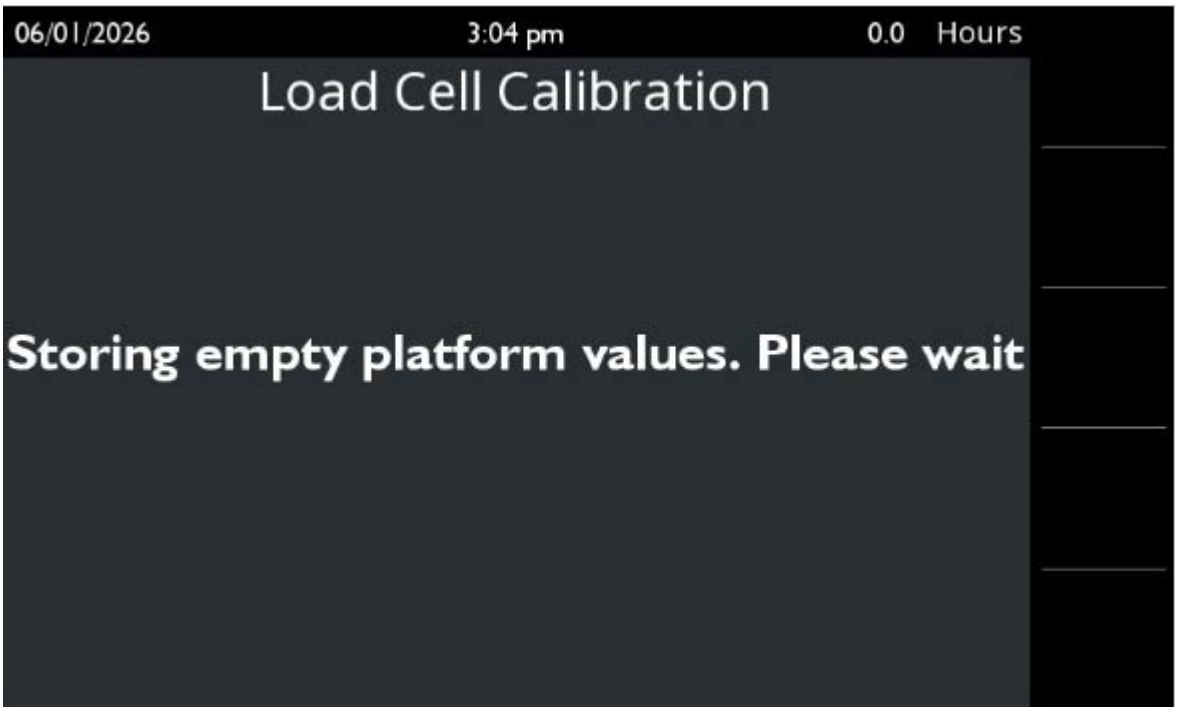

5. Add load to platform and enter total weight using 'UP' or 'Down' symbol. Press 'Tick' symbol once finished.

5.1. The minimum and maximum platform load values allowable for calibration (in kg/lbs) are displayed, and the keypad only accepts entries within this range.

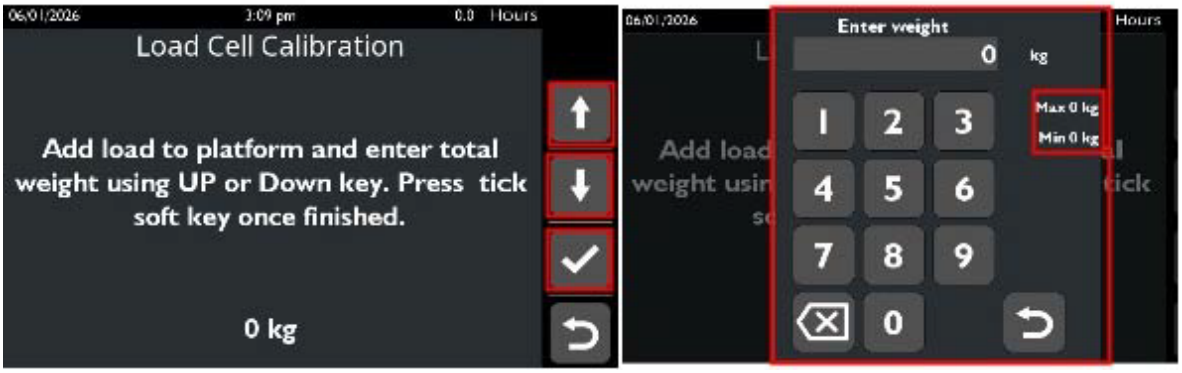

6. Wait for the specified duration for the system to store the platform load values.
Duration: 5s

© 2026 JCB INDIA LTD

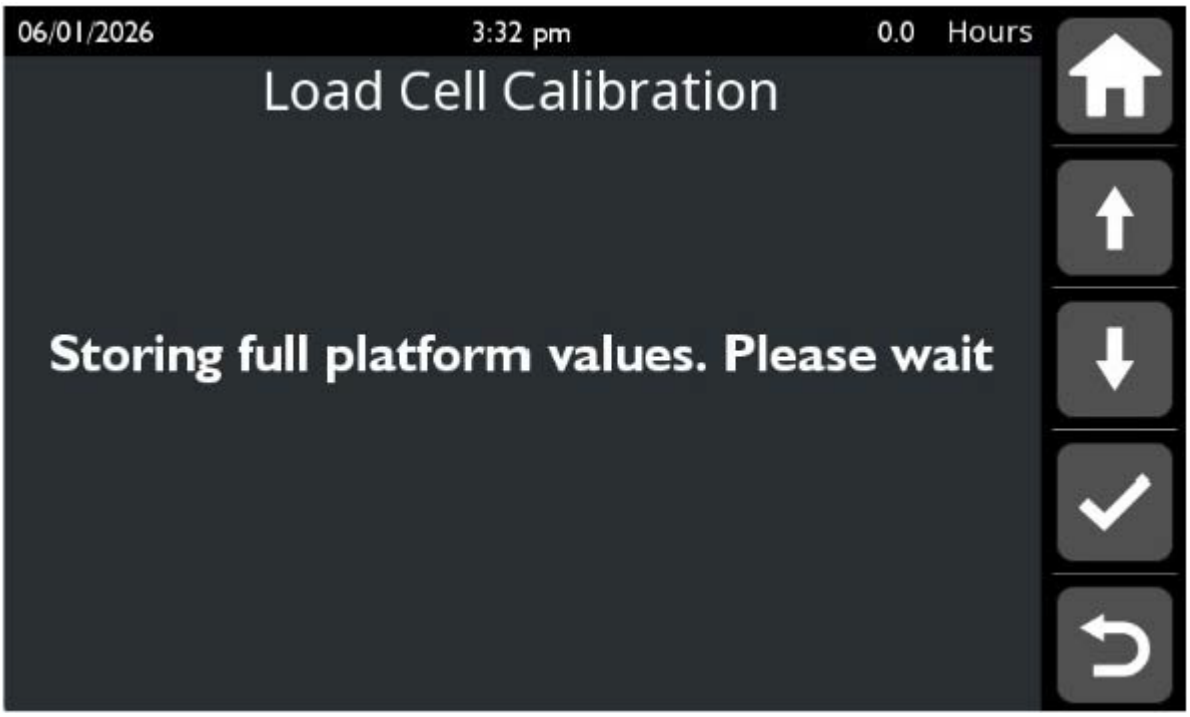

7. When the weight entry is completed, the display shows the calibration process status.

7.1. If the calibration is successful, a 'Calibration complete' message will appear on the display. To exit the display, press 'Back' or 'Home' to return to the main display.

© 2026 JCB INDIA LTD

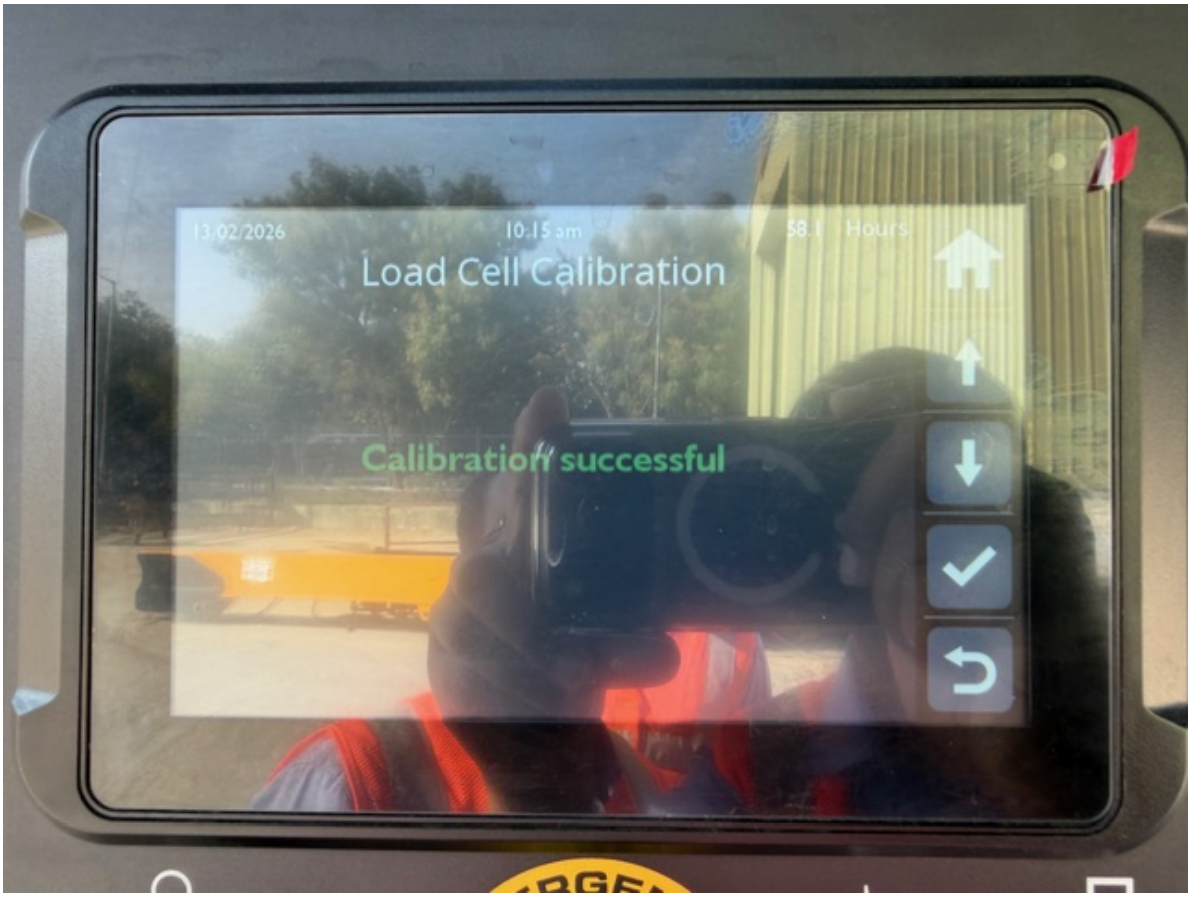

7.2. If calibration fails or the process is exited early, a 'Calibration failed' message will appear on the display. To exit the display, press 'Back' or 'Home' to return to the main display. The previously stored calibration values will continue to be used. Restart the calibration procedure or contact your JCB dealer for assistance.

© 2026 JCB INDIA LTD

© 2026 JCB INDIA LTD

6.4 Tilt Sensor Calibration

List of Tilt Sensor Calibration 976

Sr Number	Component
1	Tilt Sensor Calibration 976

6.4.1 Tilt Sensor Calibration

Special Tools		
Description	**Part No.**	**Qty.**
Tilt sensor calibration lead	400/J2673	1

Important: It is safety critical that the level of the ground is confirmed as flat during this calibration.

1. Make the machine safe with the platform raised.

   When the machine is on level ground (specified angle in each direction), do the following.

© 2026 JCB INDIA LTD

Angle: 0 °

2. Switch the ignition on. Make sure there is power to the tilt switch. Check the green LED (Light Emitting Diode) is lit.

Connect the tilt sensor calibration lead to the specified power supply.

Voltage: 12V

Special Tool: Tilt sensor calibration lead (Qty.: 1)

3. Allow the lead to be connected with power supply for the specified duration.

Duration: 3 –7s

This sets the zero position.



4. Disconnect the tilt sensor calibration lead from the power source.

The green colour LED (Light Emitting Diode) must blink. If the LED is not blinking it could be that the electrical terminal is corroded at A.

Note that the tilt sensor is Pre-set to sideways tilt by the specified angle from the horizontal.

© 2026 JCB INDIA LTD



A. Do the following steps to check tilt sensor is qualified on the X-axis.

1. Put the right side machine tyres on blocks so that the machine is at specified angle to the ground.
   Angle: 5.1°

2. Check that the tilt icon on the display, and the tilt LED on the platform control panel are turned on (red).

   Using the base control panel, raise the main boom.

   If the machine stops above the Main boom down limit switch, the tilt sensor qualifies on X-axis.

3. Check the tilt icon on the Display and the tilt LED on the Platform control panel are flashing (red) and the buzzers are beeping.

4. Do the steps 1 to step 3.2 on the left side

B. Do the following steps to check tilt sensor is qualified on the Y-axis.

1. Put the front machine tyres on blocks so that the machine is at specified angle to the ground.

   Angle: 5.1°

2. Check that the tilt icon on the display, and the tilt LED on the platform control panel are turned on (red).

   Using the base control panel, raise the main boom.

© 2026 JCB INDIA LTD

If the machine stops above the Main boom down limit switch, the tilt sensor qualifies on Y-axis

3. Check the tilt icon on the Display and the tilt LED on the Platform control panel are flashing (red) and the buzzers are beeping

4. Do the steps 1 to step 3.2 on the rear side.

6.5 Flashing of Controller

List of Flashing of Controller 979

Sr Number	Component
1	Display Flashing 980
2	Flashing Base & Platform Controller 982

© 2026 JCB INDIA LTD

6.5.1 Display Flashing

Display Flashing

Software Flashing 966 > Display Flashing

Overview

The display can be flashed and updated through USB.

Please ensure the display software being flashed is at a suitable revision to match the Bosch software.

There will need an additional lead 721/G1618



To flash the display through USB

1.Connect the additional lead 721/G1618 to the connector to the 4 way connector on the rear of the display panel.

2.Save software file onto a memory stick (FAT32 formatted)

3.Insert USB into the USB connection on additional lead

4.View display screen - at this point the screen is touch screen.

© 2026 JCB INDIA LTD



5.Use the yellow button first to remove any old parameters and software that is saved to the display

6.Select the software required to the flashed so it appears in the top file box (multiple software can be on the memory stick)

7.Press the green download button to update new software

8.wait for the software to complete its update and then remove memory stick and the display will reset



© 2026 JCB INDIA LTD

9.The machine VIN number will need to be updated through service-master tool

6.5.2 Flashing Base & Platform Controller

Flashing on the Bosch ECU's

Use the JCB Flashloader.

For information on the Flashloader tool, see JCB Servicemaster tools section

This instruction begins with the tool connected to the machine

1.Connect DLA cable & setup (tough book) to the machine.

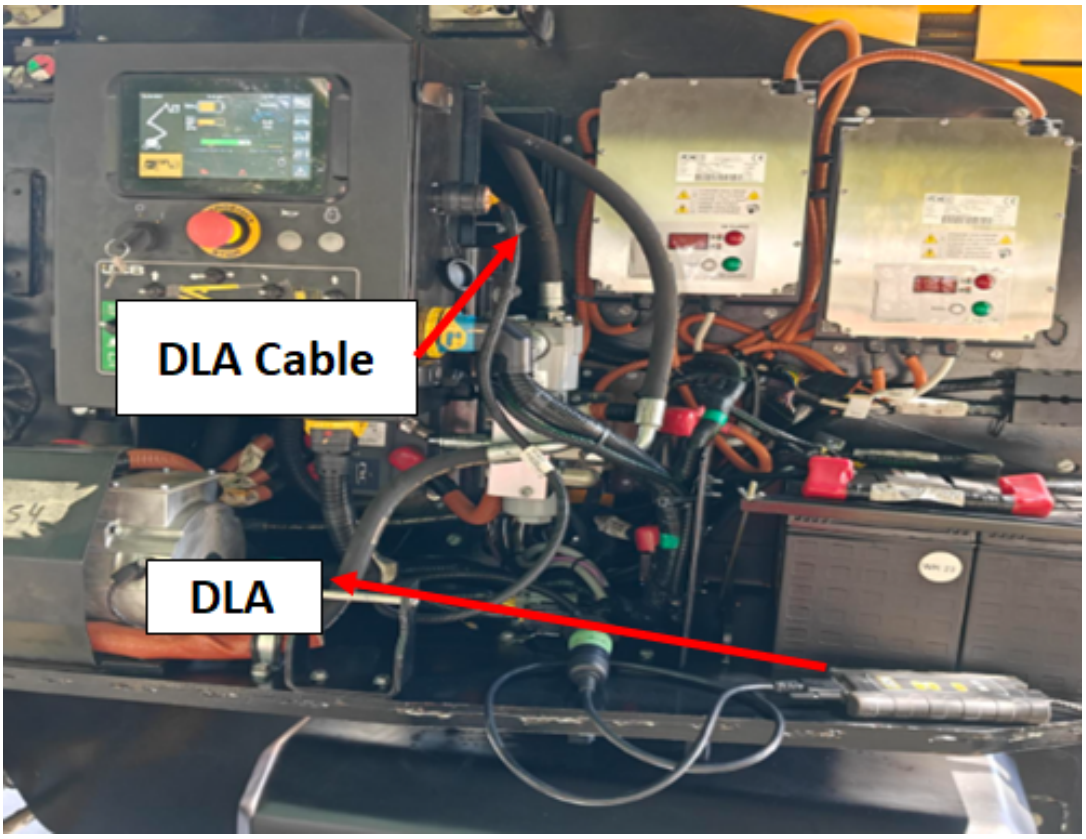

2.Click on ServiceMaster

© 2026 JCB INDIA LTD

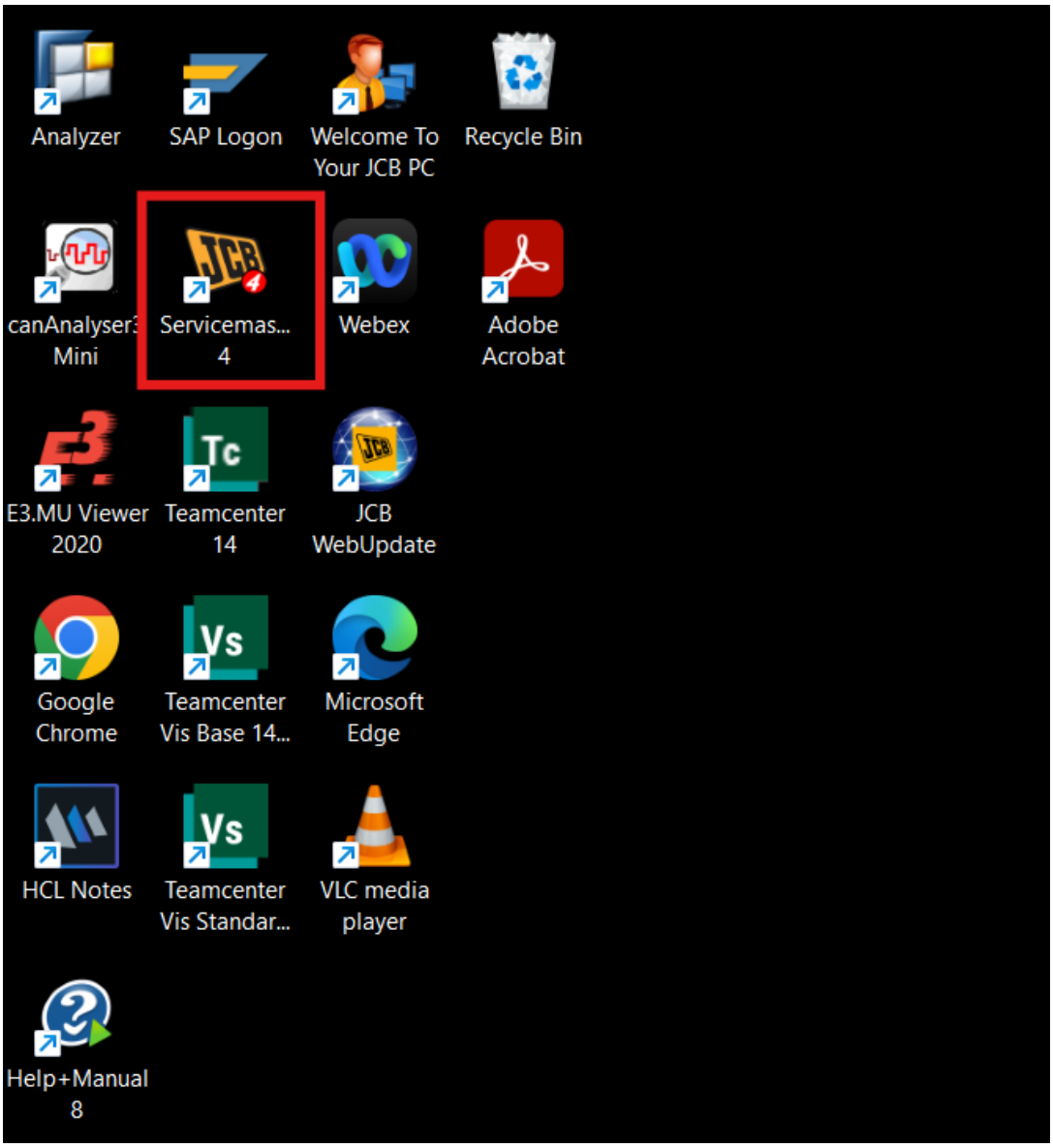

3.Click on Access tab

© 2026 JCB INDIA LTD

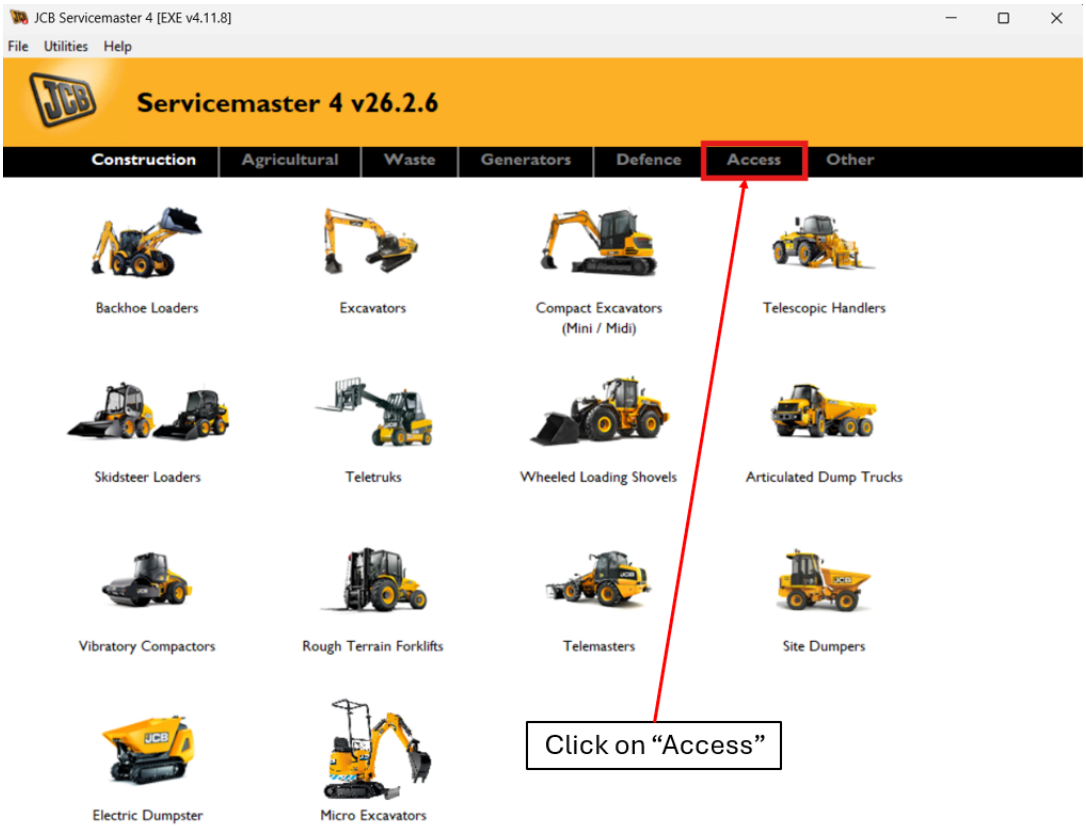

4.Click on Access(Articulated Booms) icon

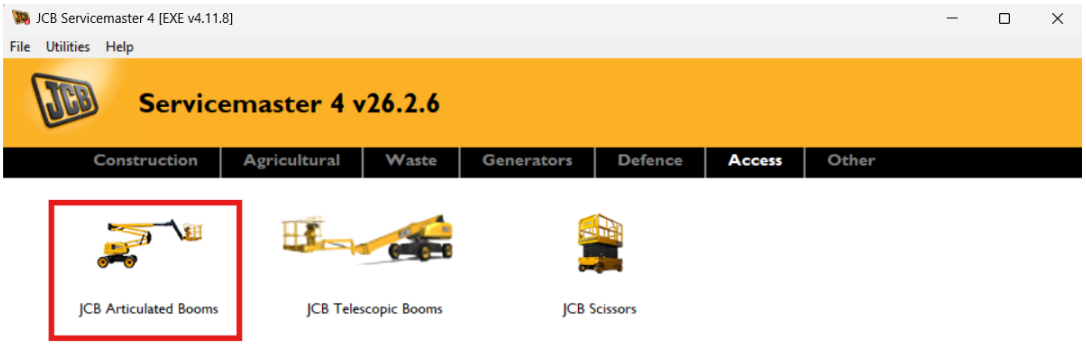

5. Click on A48 Diesel

© 2026 JCB INDIA LTD

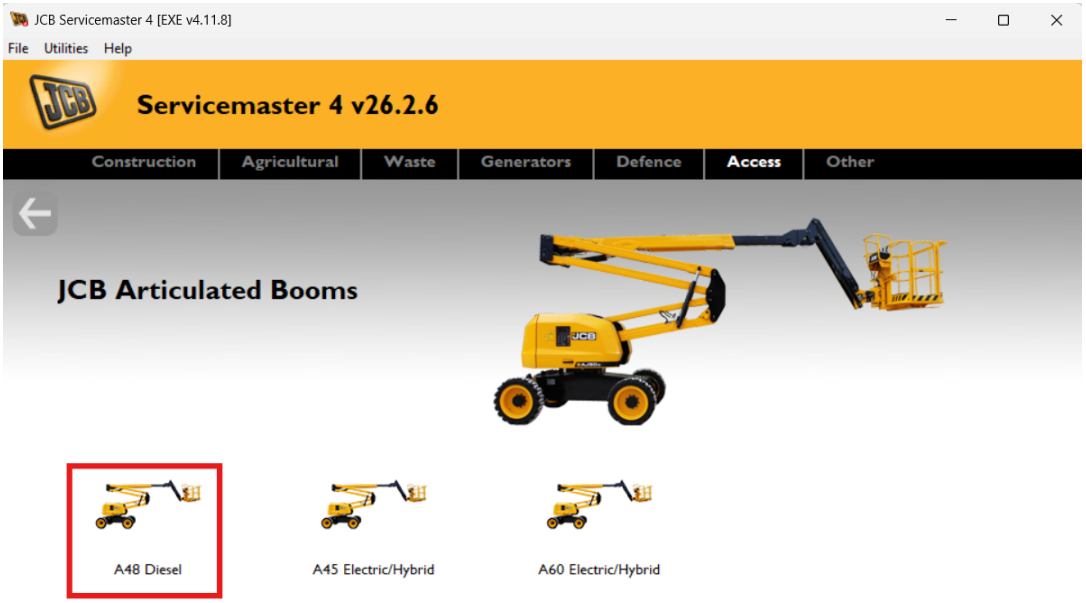

5.Click on Flashloader

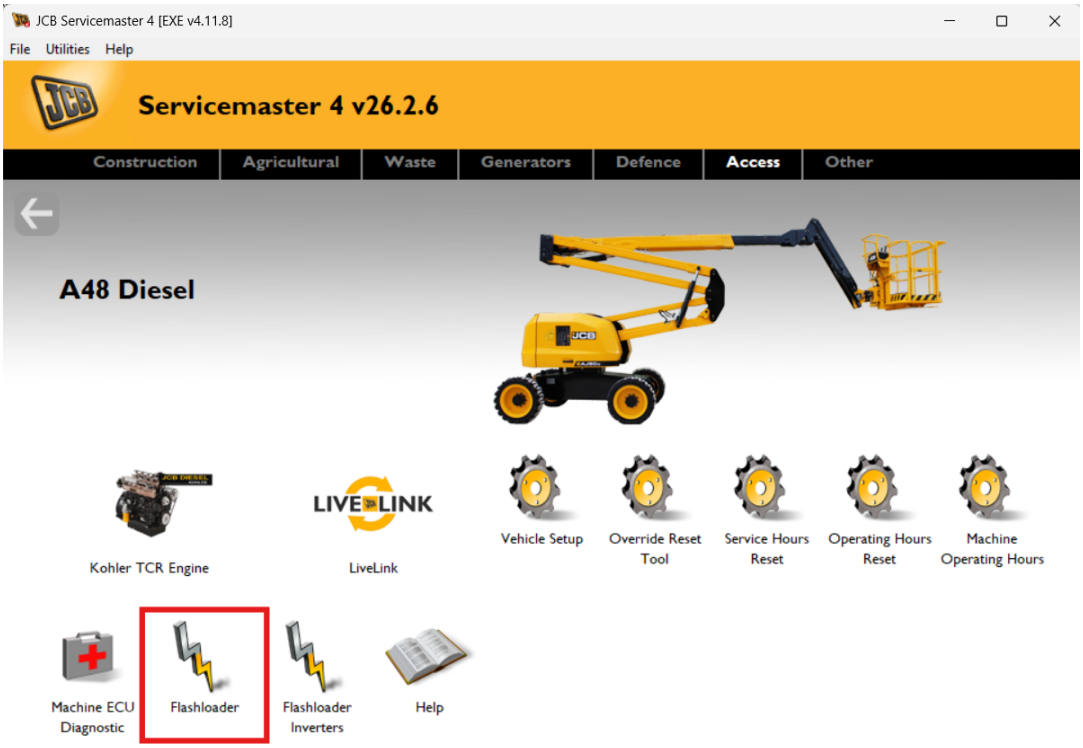

© 2026 JCB INDIA LTD

6.Click Run

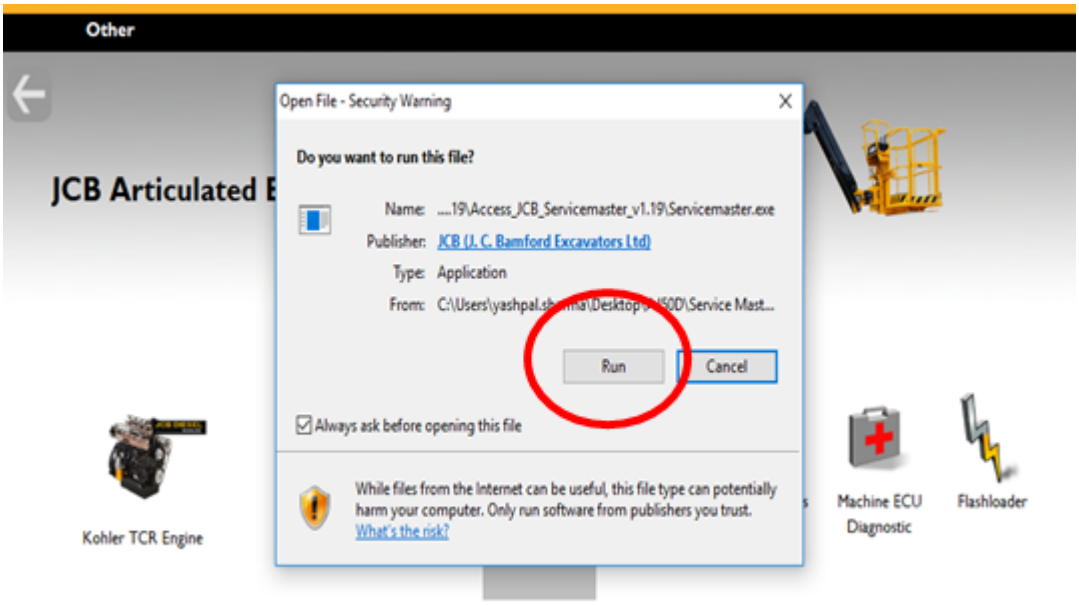

8.Select ECU you need to flash - Base or Platform

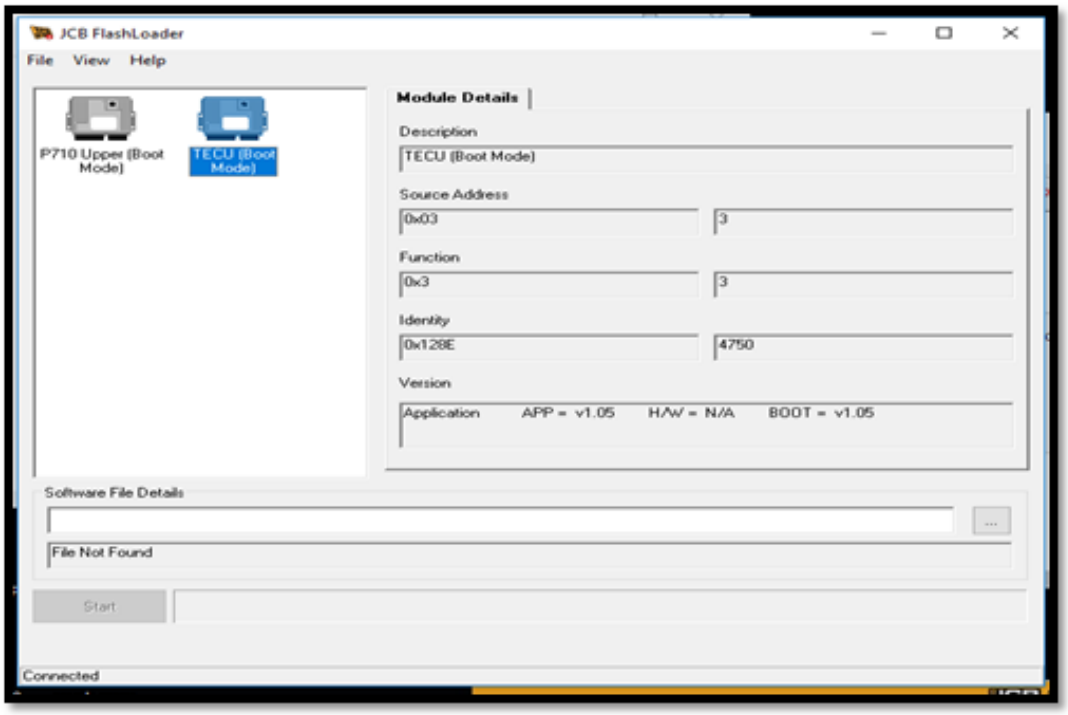

9.Select software file from PC

© 2026 JCB INDIA LTD

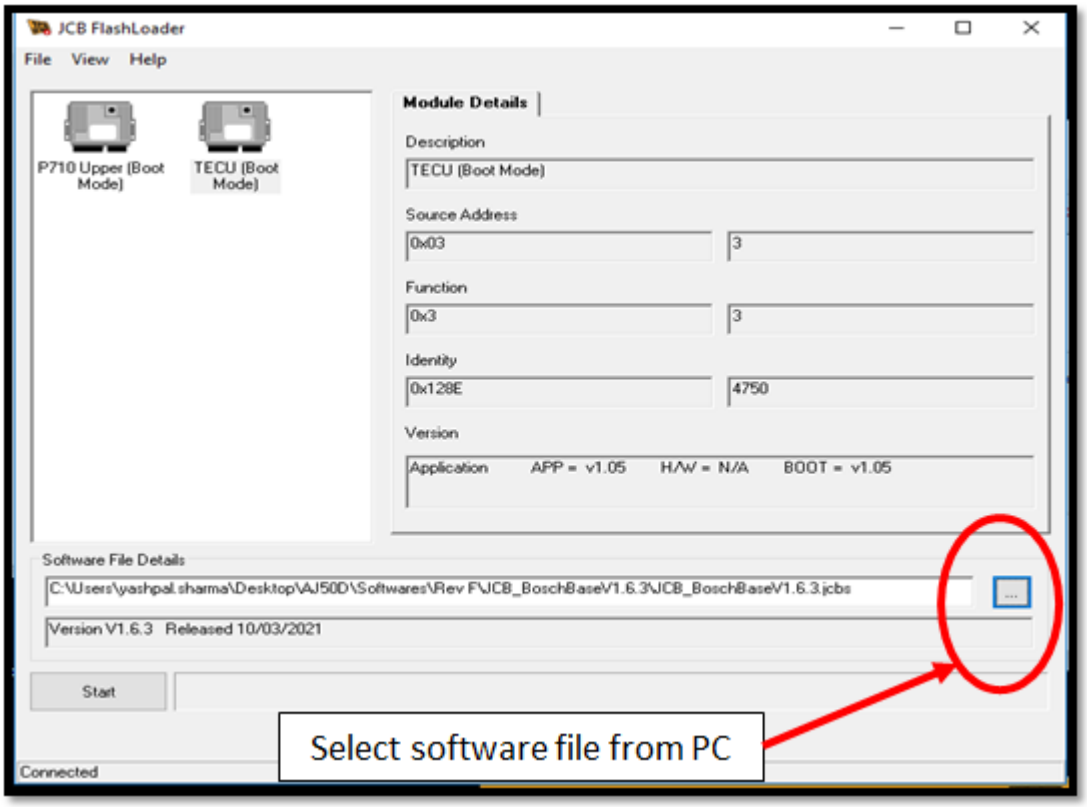

10.After selecting software file click Start button and wait for flashing to complete - 100%

© 2026 JCB INDIA LTD

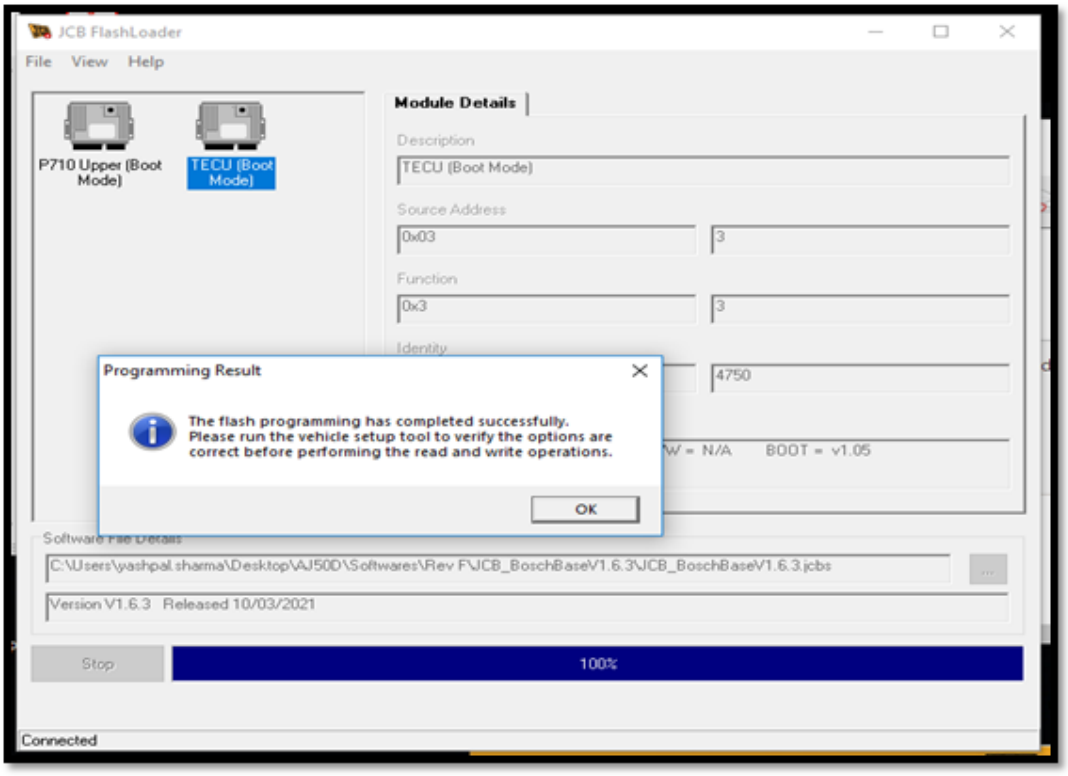

After select software from PC click start button & wait till Flashing complete

© 2026 JCB INDIA LTD

Service Master Tools Help

7 Service Master Tools Help



List of Service Master Tools Help 990

Sr Number	Component
1	Install Software - Service Master 990
2	Using JCB Service Master 992
3	Using DLA (Data Link Adapter) 993
4	Diagnostic Tool 998
5	Flash Loader Tool 999

7.1 Install Software - Service Master



Service Master Tools Help 990 > Install Software - Service Master

General

The ServiceMaster Tools allows communication between the service laptop and the machine.

To use the 'ServiceMaster Tool', the operator must install the latest version software into service laptop.

Instructions for Install Software - ServiceMaster

Follow the below steps to install the software

Step 1: Visit the JCB Dealer Business Portal

Step 2: Enter your User and password details to login

© 2026 JCB INDIA LTD



Step 3: Click on 'ServiceMaster' icon

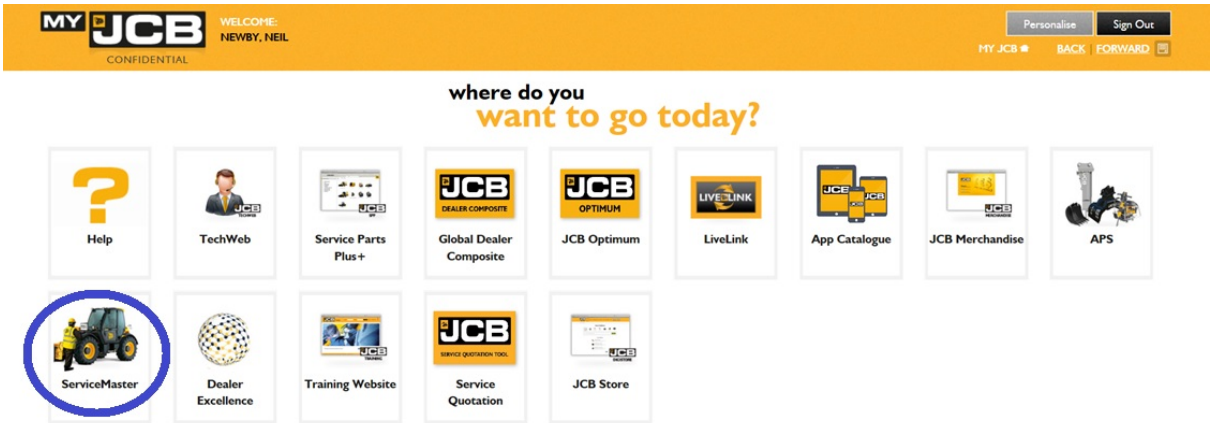

Step 4: Go to ServiceMaster tab --> SM Web Update

© 2026 JCB INDIA LTD

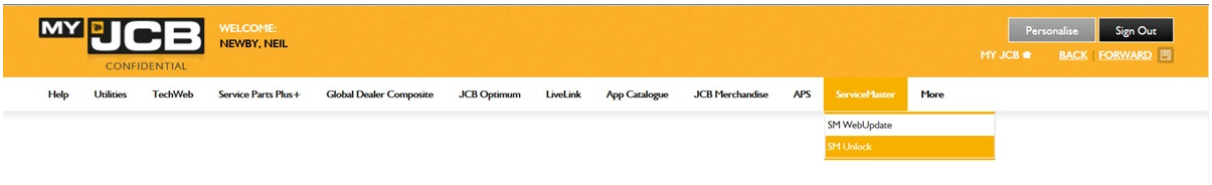

Step 5: Download or update the ServiceMaster tool software (check the text 'click here' to download)

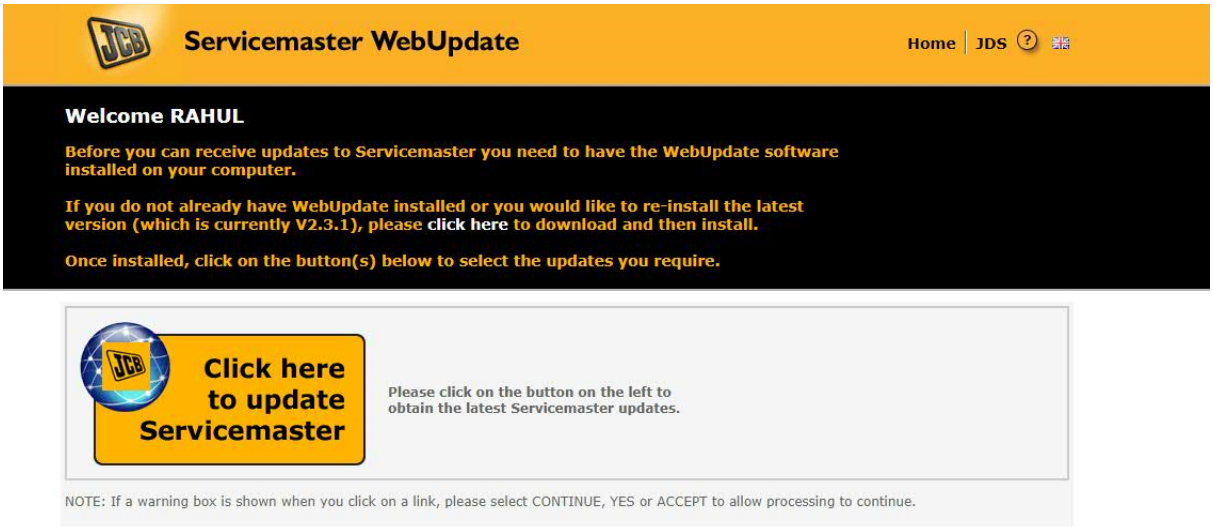

7.2 Using JCB Service Master



Service Master Tools Help 990 > Using JCB Service Master

Overview

•The ServiceMaster Tools allows communication between the service laptop and the machine.

•A Data Link Adapter (DLA)' connects the computer USB Port to the machine Can-Bus through the Diagnostic Connector.

Fault Codes:

© 2026 JCB INDIA LTD

•Each ECU can generate a fault code if it detects the behaviour of an input or output is not as expected. Fault codes are transmitted by each ECU over the CanBus and stored on the DECU for future reference. View a complete list of error codes.

•The states of ECU inputs (switches and sensors) and outputs (solenoids, LED's etc) are broadcaster on the Can Bus. These values can be monitored using the Diagnostic Tool.

•If a switch is hardwired directly to a component (e.g. the horn), rather than being wired to an ECU, then there is no means of monitoring its state on the CanBus using the Diagnostic Tool.

•Information Pages detail many ECU inputs and outputs.

•The Flashloader Tool is used to program ECUs with new software, sending information to the ECU over the Can Bus.

7.3 Using DLA (Data Link Adapter)

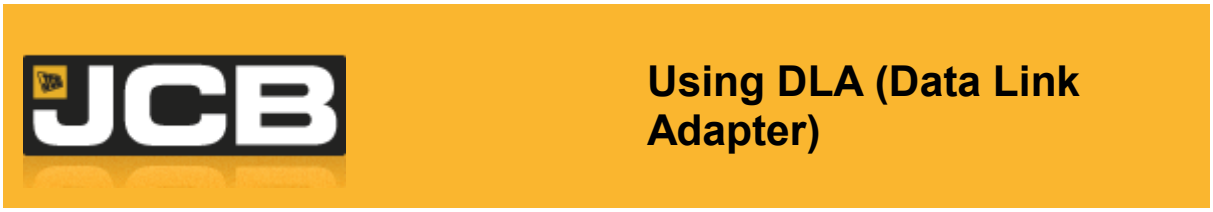

Service Master Tools Help 990 > Using DLA (Data Link Adapter)

Overview

The DLA (Data Link Adapter) allows Can-Bus communication between a service laptop and the Machine ECUs through the Diagnostic Socket.

The DLA must be installed on the Laptop before it can be used.

Note: Some computers install the DLA on only one USB port. In this case, if the DLA is connected to a different USB port then no communication can be made with the Machine.

Installation Procedure - DLA Drives

Follow the below steps to install the drives

Step 1: After ServiceMaster software install into the service laptop, Open 'ServiceMaster' tool link (shortcut should be available at desktop)

© 2026 JCB INDIA LTD

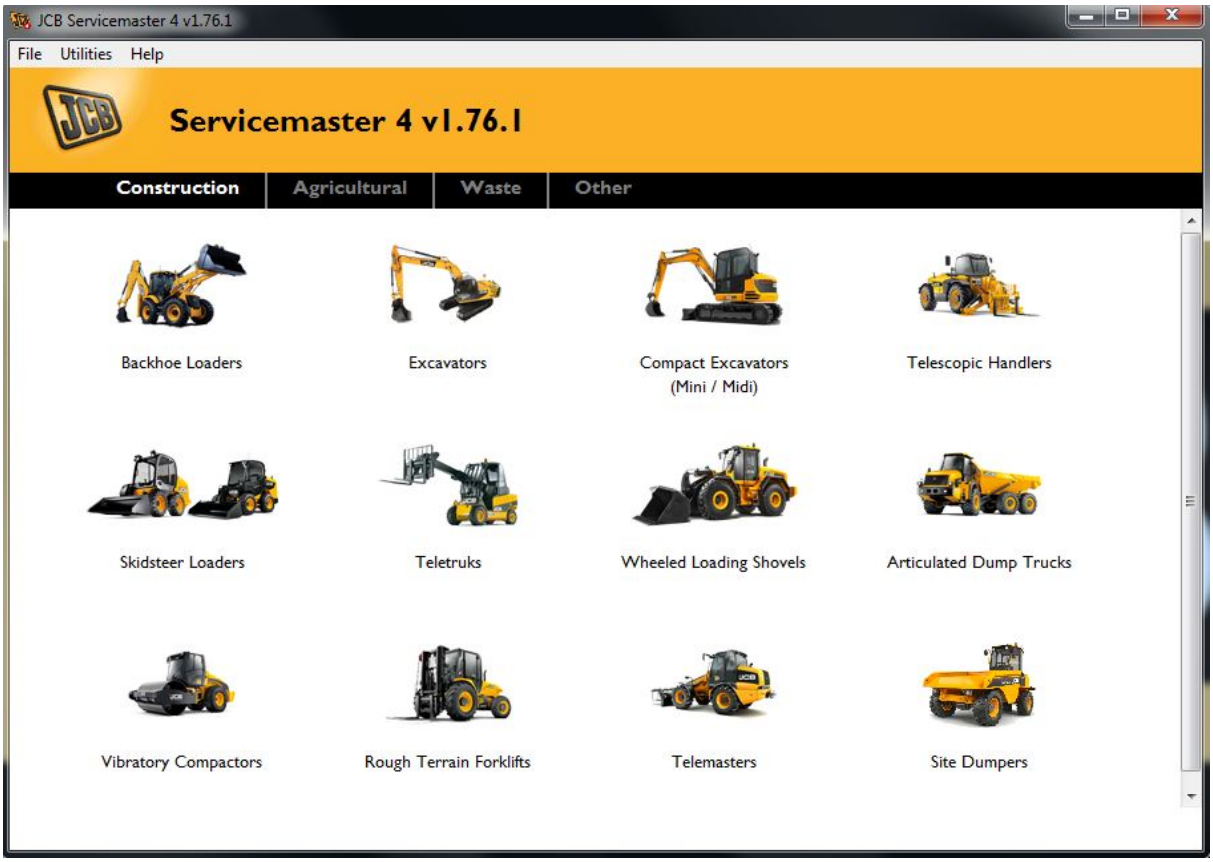

Step 2: Go to Other --> General

© 2026 JCB INDIA LTD

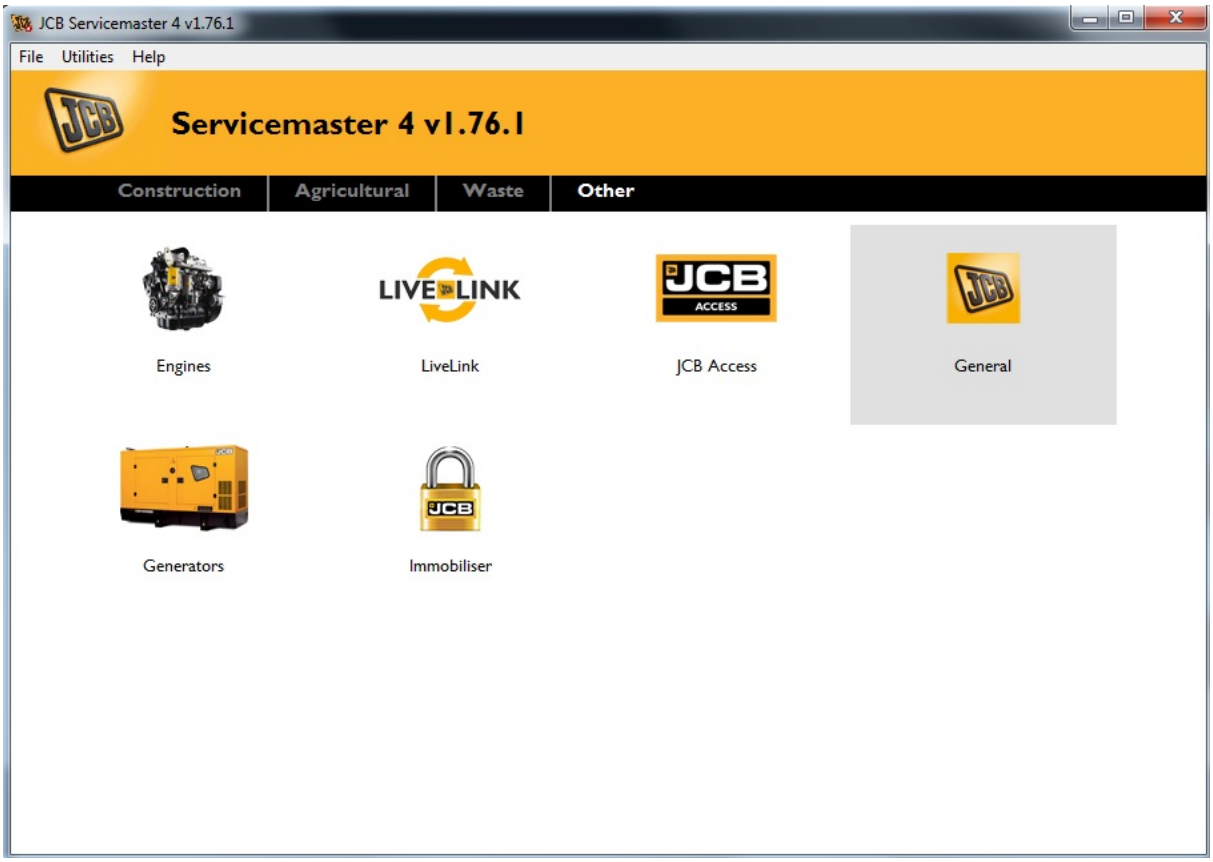

Step 3: Go to DLA

© 2026 JCB INDIA LTD

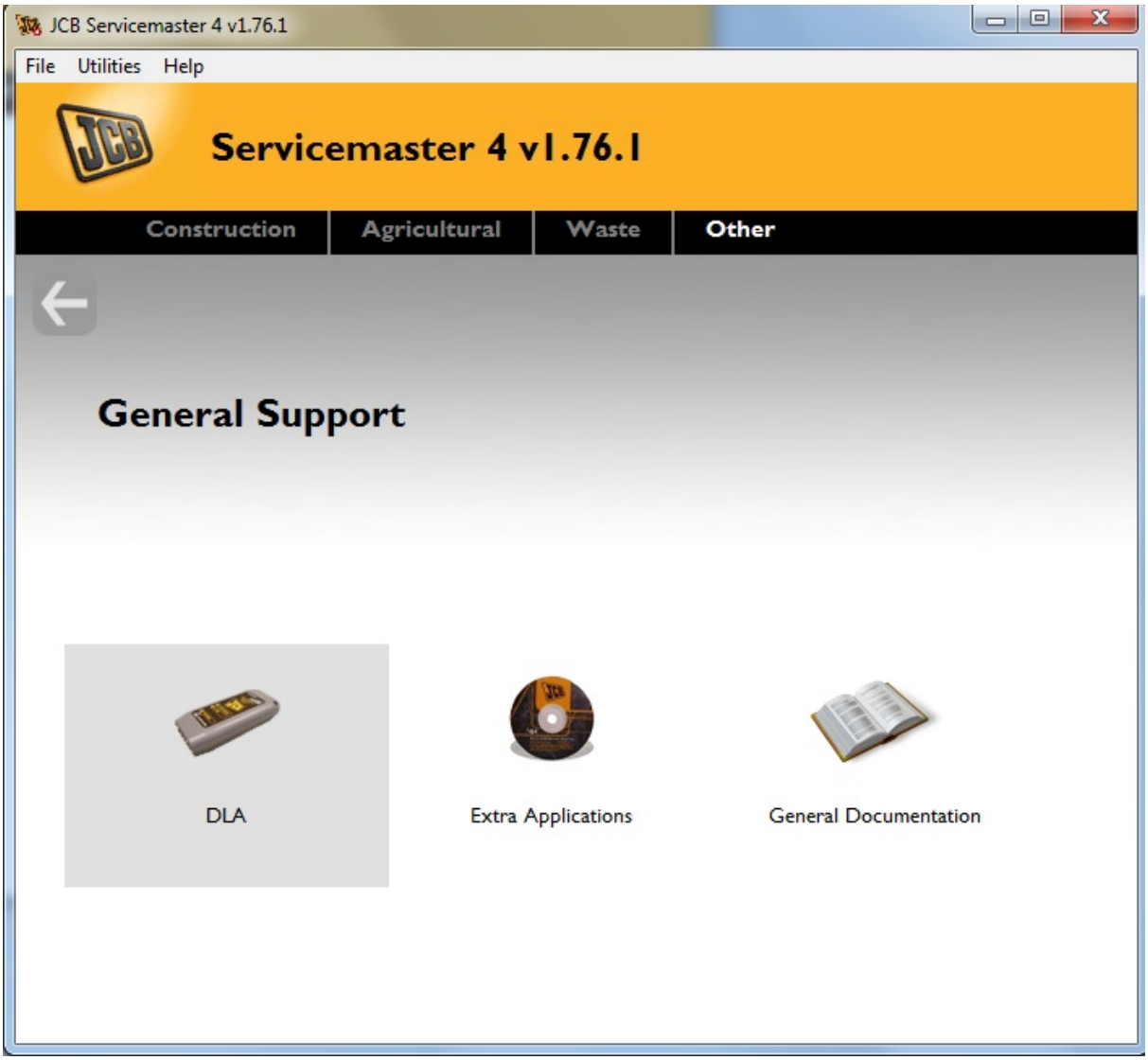

Step 4: Go to V1.7 USB DLA Win 7

© 2026 JCB INDIA LTD

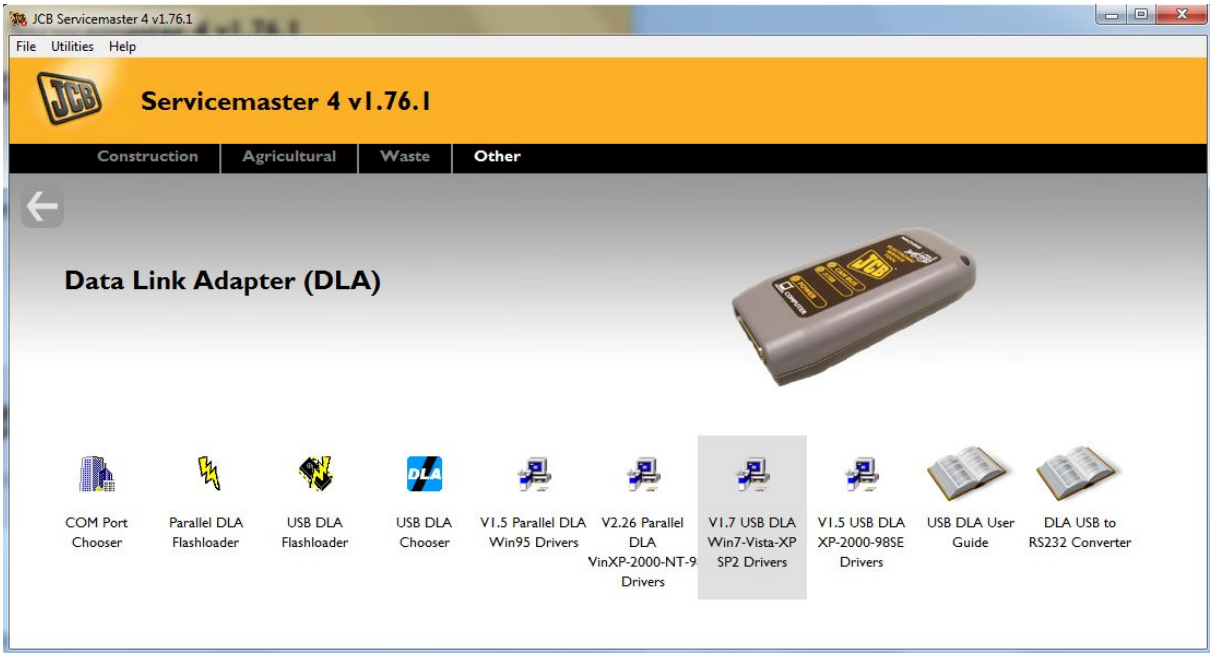

DLA Connections and Parts

Data Link Adapter should connect between service laptop and machine as shown below.

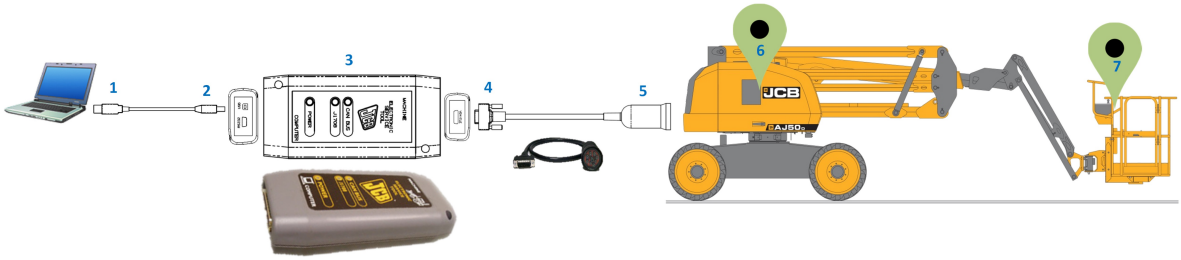

Parts	Description
1	To PC / Laptop USB
2	USB port at DLA
3	DLA
4	15 way D type connector at DLA
5	Deutsch 9 way 1939SE connector
6	Diagnostic connector location at Base control Panel
7	Diagnostic connector location at Platform control Panel

Machine has Diagnostic connectors in two locations

1. Base control panel

© 2026 JCB INDIA LTD

2. Platform control panel

7.4 Diagnostic Tool



Service Master Tools Help 998 > Diagnostic Tool

Overview

If sensors and switches are wired to one of the Machine ECUs then their values or states are generally sent over the CAN Bus.

The Diagnostic Tool monitors information available on the CAN Bus to display the value detected by the ECU. The DLA must be used, connecting to the CAN Bus through the Machine Diagnostic Sockets.

If a switch is hardwired directly to a component, rather than being wired to an ECU, then there is no means of monitoring its state on the CAN Bus using the Diagnostic Tool.

The Diagnostic Tool can also be used to monitor activity of ECUs from their message rates.

If an ECU has a message rate of - then it is likely there is an ECU Power fault or a CAN Bus fault.

Note: With multiple Diagnostic Screens open, the computer can be reading so much tractor information that the Diagnostic Tool response time is reduced.

To use the Diagnostic Tool

1.Connect a USB DLA between the computers USB port and the Machine Diagnostic connector

2.Switch the Machine Ignition On.

3.Run the AJ Series Diagnostic Tool program from ServiceMaster.

4.Click the Green Start button at the top of the Diagnostic Screen (highlighted below).

5.Use the links across the top of the screen to view information menus. Select the required menu from the left hand column.

6.If no communication occurs:

•Check you have clicked the Green Start button.

•Check the Ignition is On and there is not a Machine power fault.

•Check if ECUs are functioning using the Can bus statistic page.

Refer to the notes on using the DLA.

© 2026 JCB INDIA LTD

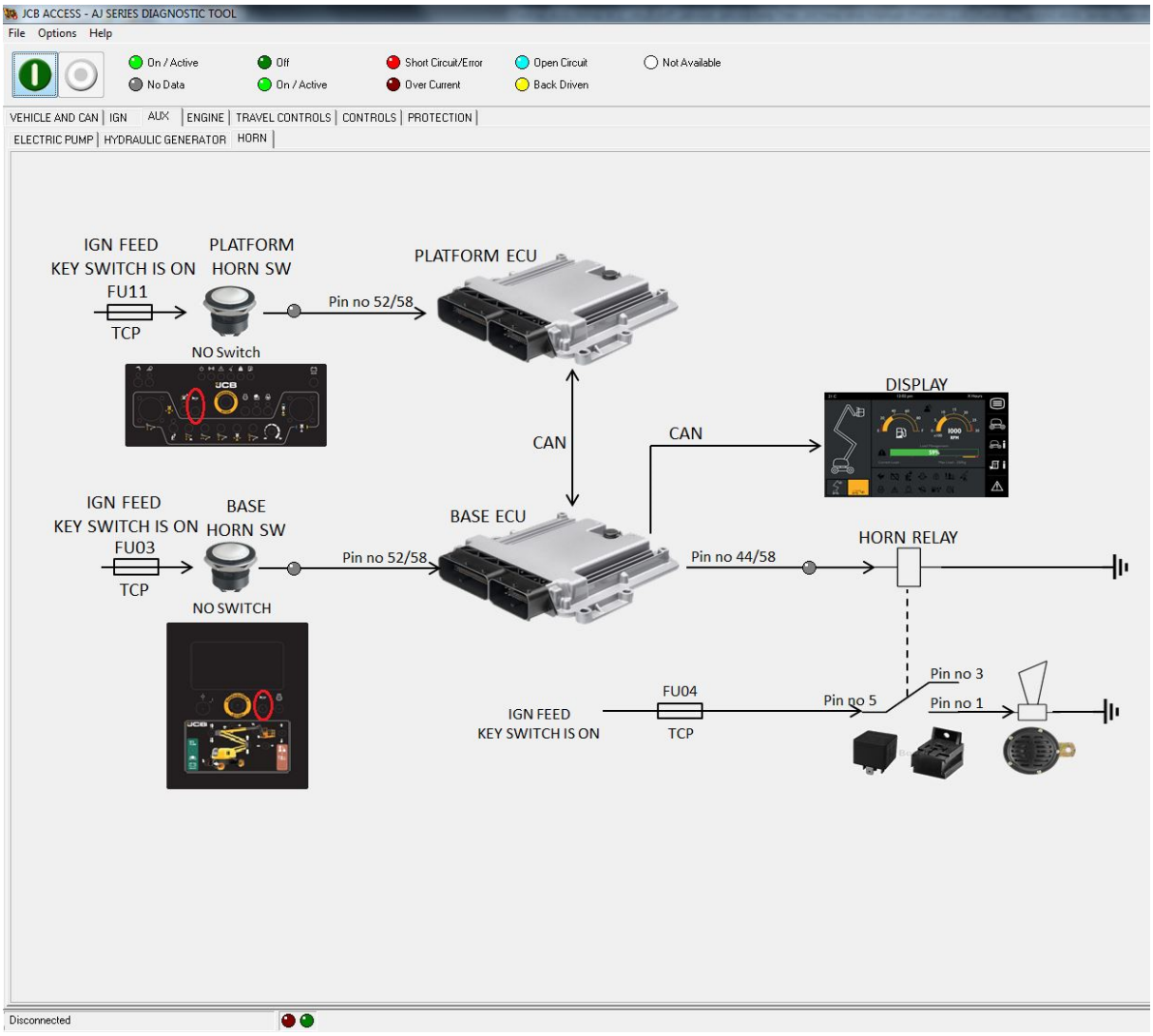

7.5 Flashloader Tool

Flashloader Tool

Service Master Tools Help 990 > Flashloader Tool

Overview

The ServiceMaster Flashloader program is used to load software into the Electronic Control Units (ECUs) on JCB machines.

During the process, the Vehicle Ignition should remain On and the Laptop should not be disconnected or allowed to enter Standby. Close other programs running on the laptop.

© 2026 JCB INDIA LTD

This tool can not be used for flashing display ECU's.

Flashloader

Check the service machine has installed the ServiceMaster software and DLA drives.

Connect the Data Link Adapter (DLA) USB port to service laptop and Data Link Adapter (DLA) diagnostic connector to machine (see DLA connections and parts)

Follow the below steps for Flash loader tool

Step 1: Open ServiceMaster --> Others

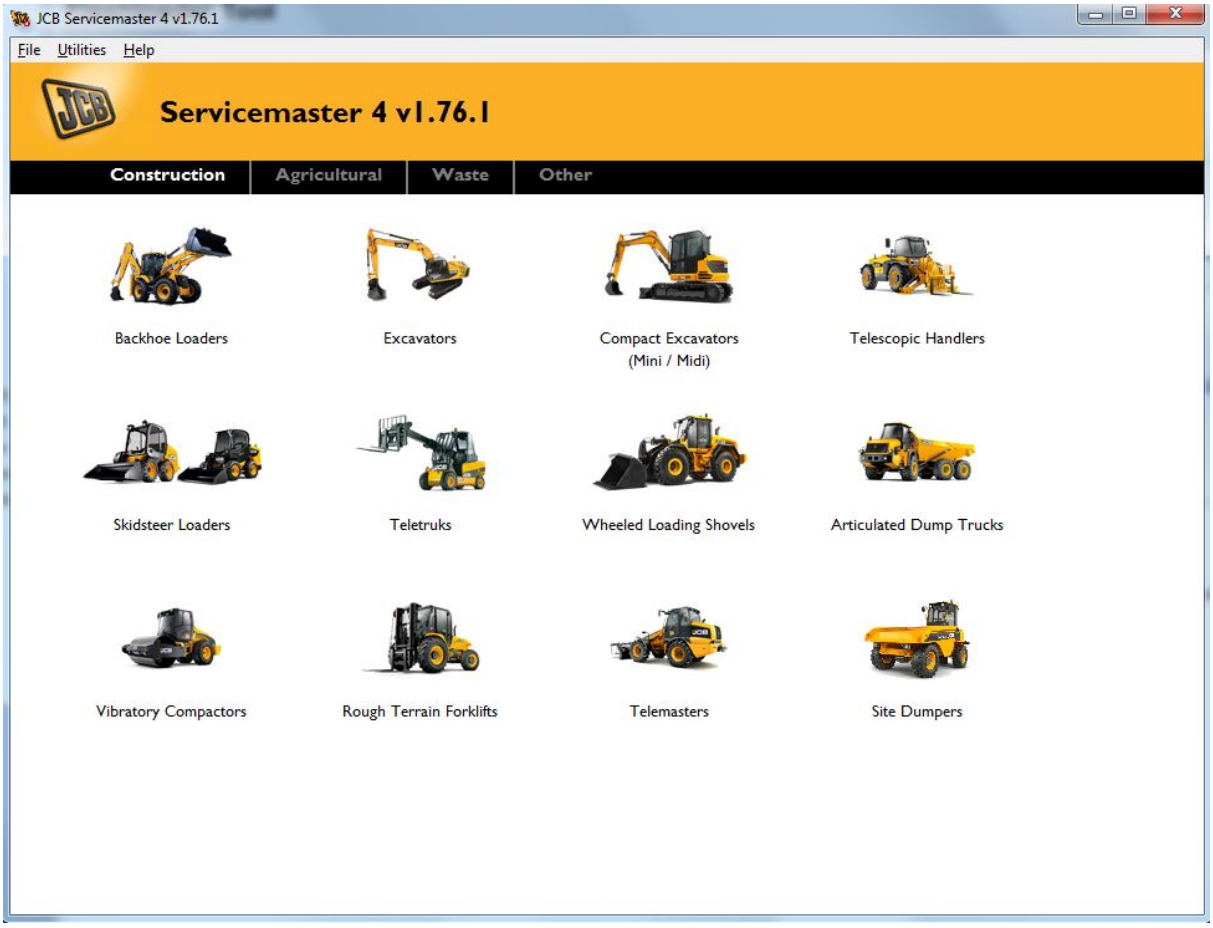

Step 2: Go to Others --> JCB Access

© 2026 JCB INDIA LTD



Step 3: Go to Articulated boom

© 2026 JCB INDIA LTD

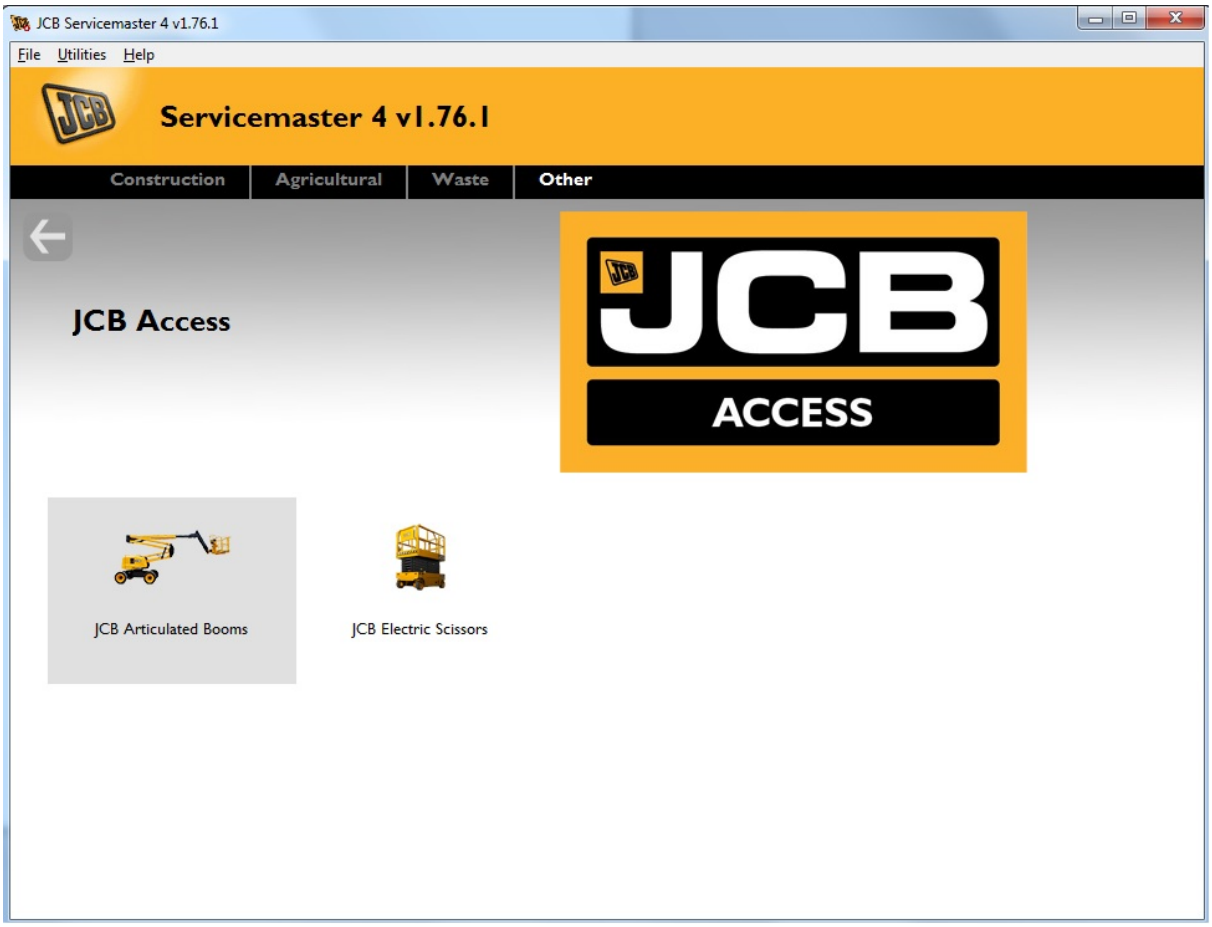

Step 4: Click on Flashloader icon (single click only)

© 2026 JCB INDIA LTD

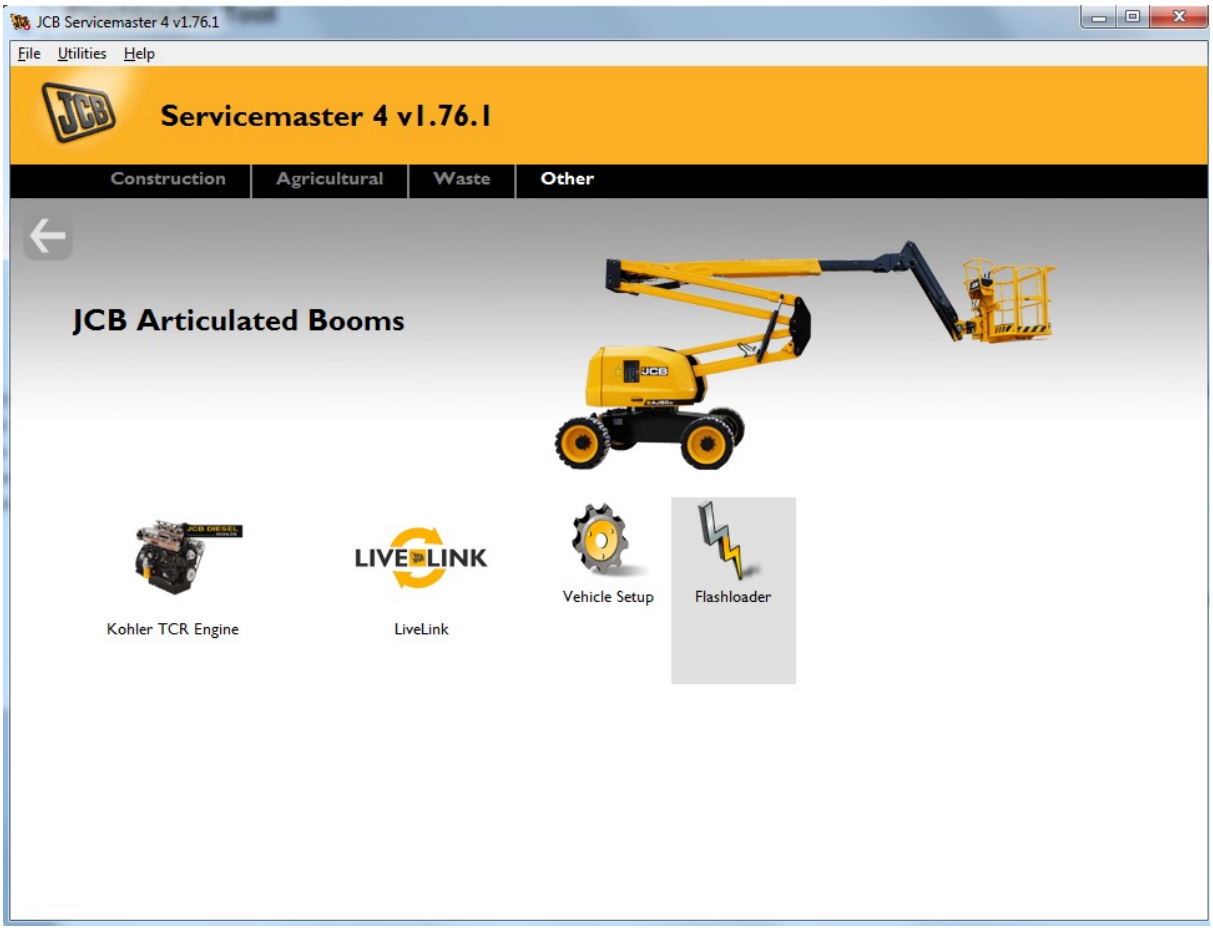

Flashing the ECU

Flashloader tool searches the ECU's connected in the machine

© 2026 JCB INDIA LTD

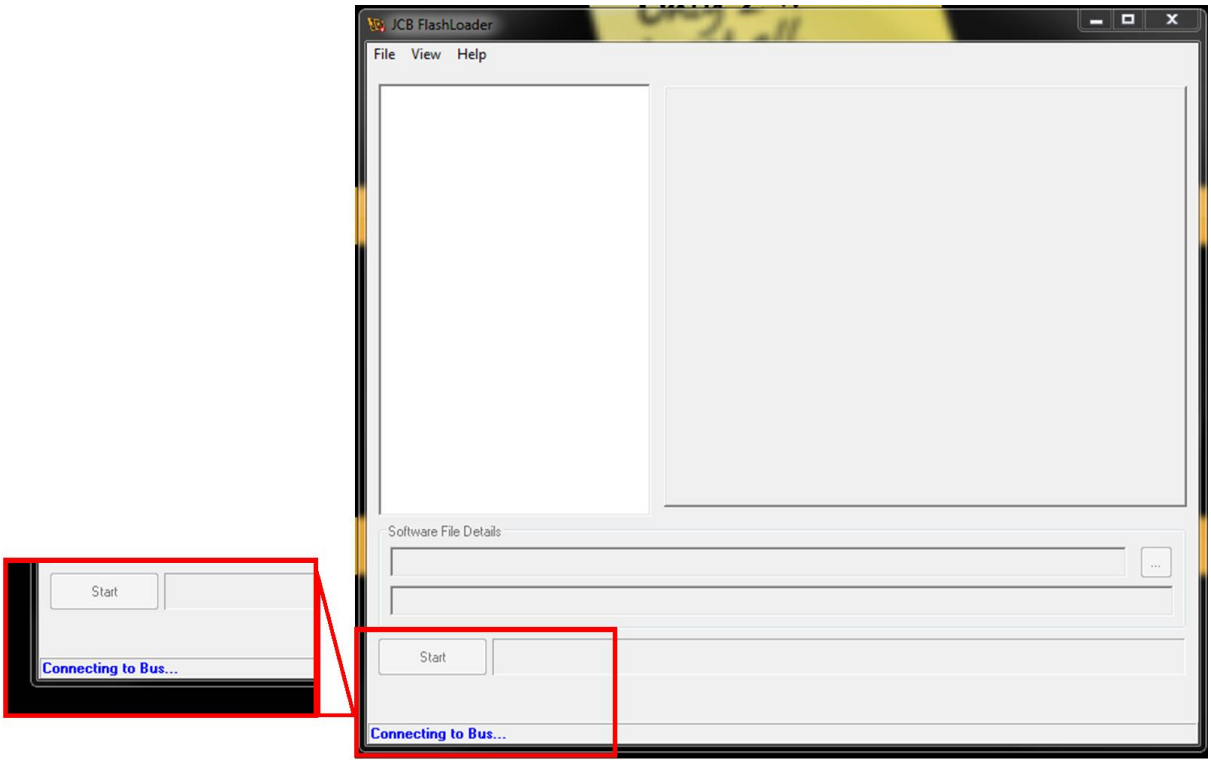

Communication Faults

Unable to connect to the DLA

© 2026 JCB INDIA LTD

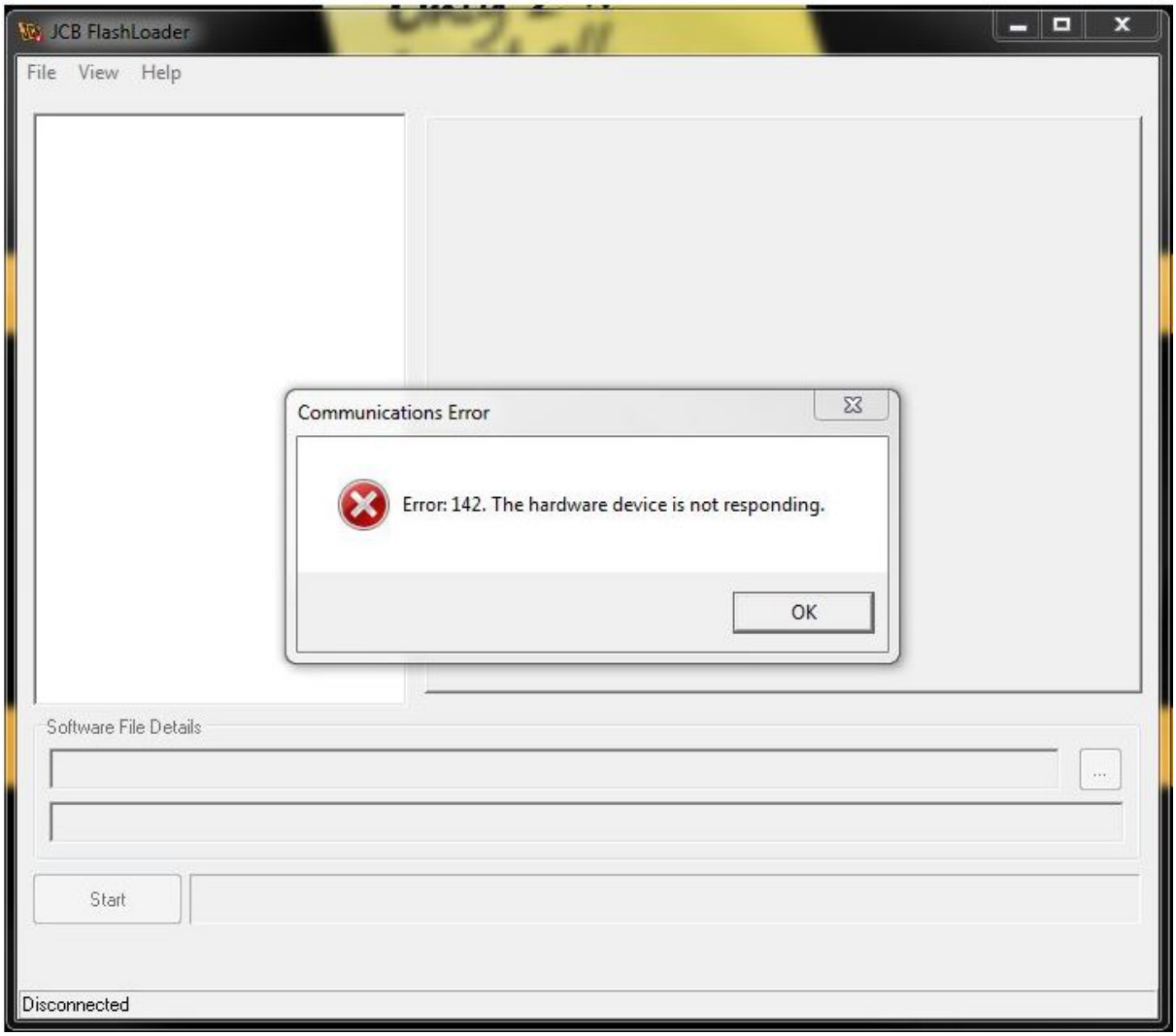

This screen is shown if:

- The Vehicle Ignition is not On
- The DLA is not connected to the laptop/machine
- The DLA is not configured for the USB port which it is plugged into
- The wrong type of DLA is configured Selecting the DLA
- The DLA does not show a red power light possibly due to a supply / earth fault with the Diagnostic Socket (fuse blown).

No modules found

- The machine is not fitted with any programmable ECUs
- There is a supply fault to the ECUs. fuse fault/ Primary fuse fault / wiring fault
- The Diagnostic socket is not connected to the CAN-Bus.
- There are no ECUs disconnected from the CAN-Bus.
- There is a CAN-Bus fault Refer to 4000 Help Pages (CAN-Bus Tests)

© 2026 JCB INDIA LTD

© 2026 JCB INDIA LTD