QUICK REFERENCE GUIDE

CT380, CT430

EN - 9828/GBL00 - ISSUE 1 - 08/2025

The information shown in this Quick Reference Guide is taken from the Operator's Manual (9851/0800).

This Quick Reference Guide DOES NOT replace the Operator's Manual. You MUST read ALL the disclaimers and safety and other instructions in the Operator's Manual before initially operating this product. Accordingly, no legal claims can be entertained based on the data, illustrations or descriptions in this Quick Reference Guide.

Component Locations

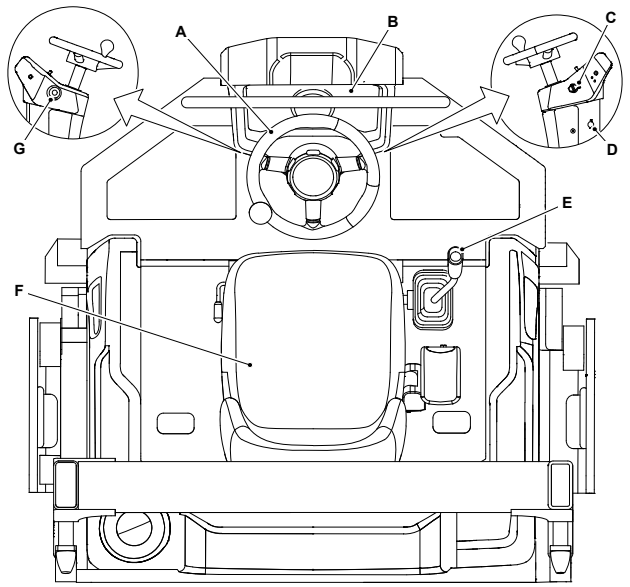

A Steering wheel

B Front console switches and instrument panel

C Ignition switch

D Auxiliary power socket

E Drive lever

F Operator seat

G Emergency stop button

Instrument Panel

The instruments and warning lights are grouped together on an instrument panel.

When a warning light comes on an alarm will sound (depending on severity of the condition). The only way to cancel the alarm is to set the ignition switch to position '0'. The problem can then be rectified.

Do not use the machine if it has a fault condition, or you may damage the engine and/or the transmission.

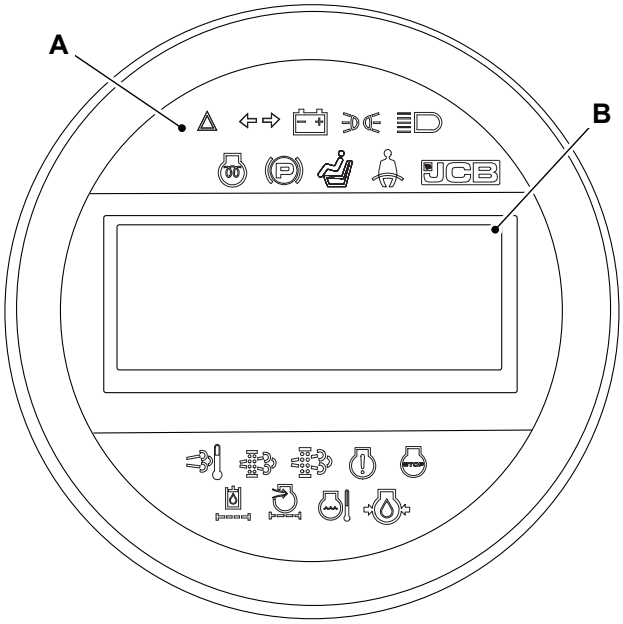

A Warning and notification symbols

B LCD

Warning and notification symbols

Warning and notification symbols

	Hazard warning indicator (Red)	Visual only. Flashes with the hazard warning lights. Turn the flashers on when your machine is a possible hazard.
	Direction indicator (Green)	Visual only. Illuminate with the direction indicators. Use the direction indicators to signal before you turn the machine.
	Battery charging condition (Red)	Audible/Visual. The lamp illuminates and buzzer will sound, if battery is not charging while engine is running. If battery is charging, the lamp and buzzer should go off a few seconds after the engine is started.
	Sidelights (Green)	Visual only. Illuminates when sidelights are switched on (part of road light option, integrated to dip beams).
	Main Beam (Blue)	Visual only. Lights up when the headlight main beams are switched on. Turn the main beams off for on-coming traffic.
	Engine pre heat (Amber)	Visual only. Illuminate when engine pre heat is on.
	Park brake on (Red)	Visual only. Illuminates when the park brake is engaged.
	Seat switch (Amber)	Visual only. Illuminate when operator is not sat on the operator seat.

	Seat belt switch (Amber)	Audible/Visual. Illuminates when seated operator does not wear the seat belt whilst the drive lever is out of neutral position. The buzzer turns on along with the tell tale and turns off either after the seat belt is fastened or after 15s.
	HEST (High Exhaust System Temperature) (Amber)	Visual only. Illuminates during DPF regeneration Engine Emissions System Filter.
	DPF (Diesel Particulate Filter) Regeneration Warning (Amber)	Visual only. Illuminates when DPF manual regeneration is required, Flashes when DPF manual regeneration is in progress Engine Emissions System Filter.
	DPF Regeneration Warning (Red)	Visual only. Illuminates when DPF service regeneration is required. Flashes when DPF service regeneration is in progress.
	Engine Warning (Amber)	Visual only. Illuminates when DPF manual regeneration is required.
	Engine Stop (Red)	Visual only. Illuminates when DPF service regeneration is required.
	Hydraulic oil filter (Amber)	Visual only. Illuminate when hydraulic oil filter is blocked.
	Engine air filter blocked (Amber)	Audible/Visual. Illuminate engine air filter is blocked.
	High coolant temperature (Red)	Audible/Visual. The light will illuminate when the engine coolant temperature is too high. Stop the machine immediately and remedy the fault.
	Engine low oil pressure (Red)	Audible/Visual. Illuminates if the engine oil pressure drops too far. Illuminates when the ignition switch is set to position 'I' before starting the engine but should extinguish when the engine starts, if this light remains 'on' stop the engine immediately.

Basic Controls

The drive lever has three positions: forward, neutral/park brake and reverse.

Use the drive lever for changing the driving direction and speed adjustments.

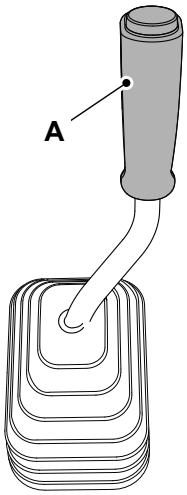

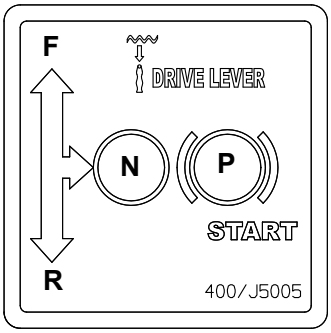

A Drive lever

F Forward drive position

R Reverse drive position

N Neutral position

P Parkbrake position

The neutral position is in the centre of the lever travel.

To operate the machine, move the drive lever forwards or backwards from the neutral position.

Move the lever forward to drive the machine forward and move the lever backward to reverse. The control is proportional (i.e. the further the lever is moved from the neutral position, the faster the machine will travel.

Move the lever to the neutral position or parkbrake to stop the machine.

When you start or stop the engine, make sure that the drive lever is in the park position and that is has locked in position.

The engine will only start when the drive lever is in the park brake position.

Both ways Driving lever (Optional)

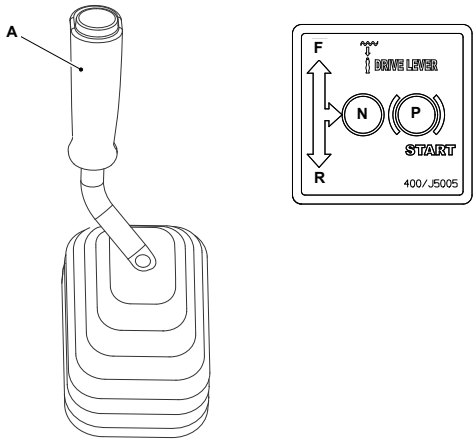

A Drive lever
F Forward drive position
R Reverse drive position
N Neutral position
P Parkbrake position

Lifting Points

Lifting Points

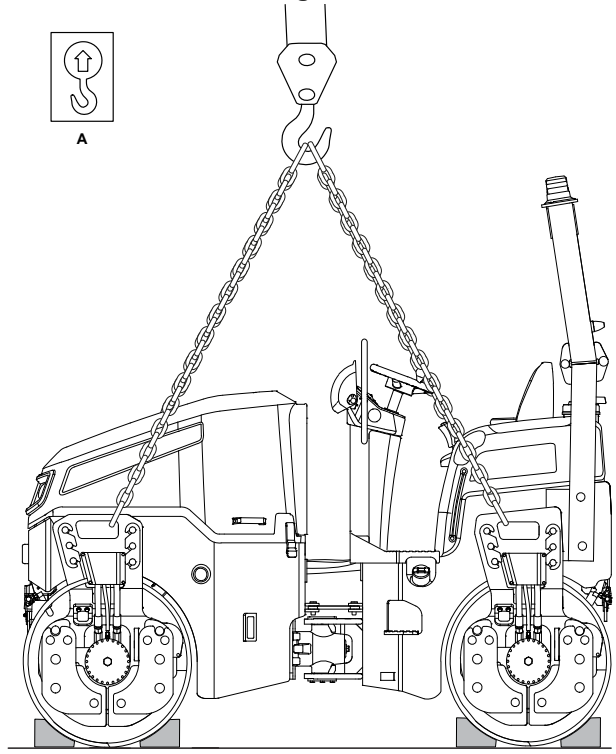

A Lifting label

Tie Down Points

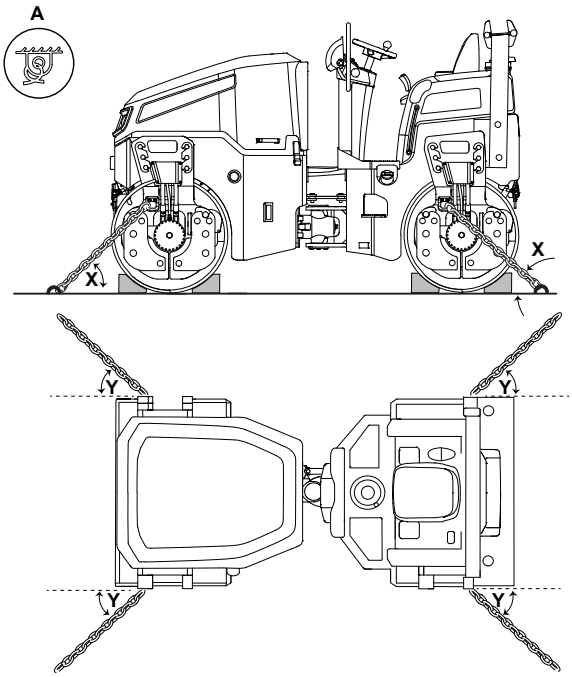

A Tie down decal
X 35°
Y 45°

Operator Maintenance Tasks

Component	Task	10	50
Engine			
Oil Level	Check	O	O
Coolant Quality/ level	Check	O	O
Coolant or Oil Leaks	Check	O	O
Water Separator	Check for Contamination and Drain		O
All Hoses - Condition	Check	O	O
FEAD (Front End Accessory Drive) belt	Check (condition/tension)		O
Air filter dust valve	Check	O	O
Fuel pipes and clamp bands	Check		O
Exhaust smoke.	Check		O
Drum, Transmission and steering			
Drum Scrapers	Clean	O	O
Drum scrapers	Check	O	O
Drum Distance Spacers / Buffer[(1)]	Check (if necessary)		O
Vibration operation	Check	O	O
Sprinkler system operation.	Check	O	O
Hydraulics			
Oil	Check (Level)	O	O
Hoses - Damage or Leaks	Check	O	O
Rams - Chrome condition, leaks, security	Check		O
Operation all services.	Check		O

Component	Task	10	50
Brakes			
Drive brake-operation	Check	O	O
Park brake -operation	Check	O	O
Electrics			
Wiring for damage/routing	Check (Condition)		O
Battery Mounting	Check (Condition)		O
Battery Terminals for Condition and Tightness	Check (Condition)		O
All electrical equipments operation (e.g. warning lights, beacon, alarm, horn etc.)	Check	O	O
Engine stop	Check	O	O
Bodywork and Cab			
Safety Decals/Notes	Check	O	O
Cab Isolation Mounts	Check		O
ROPS (Roll-Over Protective Structure)	Check (Condition)	O	O
Seat Belt - Condition, operation and security (If fitted)	Check	O	O
Machine Generally including paintwork	Check for Damage and Clean	O	O
Operator's seat safety switch (if installed)	Check	O	O
Neutral start operation	Check	O	O

(1) Check the tightness of the bolts/screws every day for the first week (when machine is new), then thereafter every 500h.

Fuses and Relays

Primary Fuses- Engine Compartment cover

Open the engine compartment cover to get access to the primary fuses.

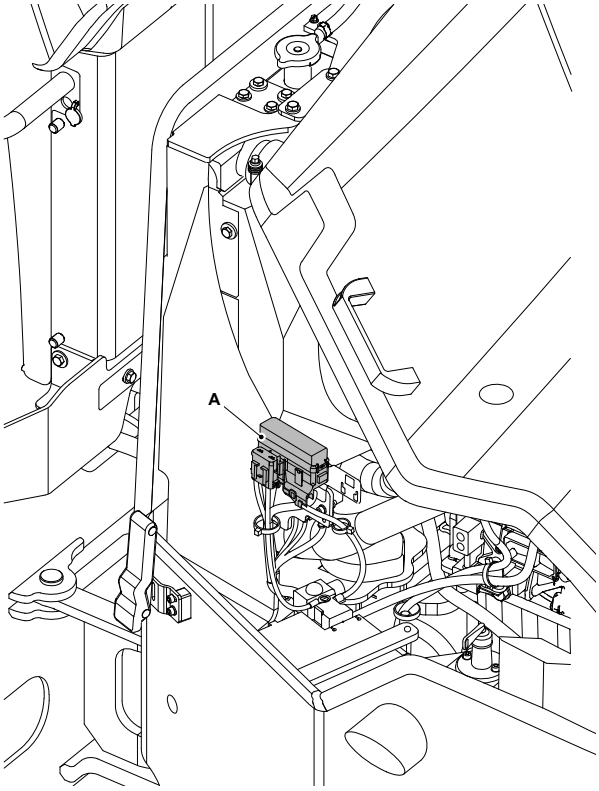

A Primary fuse box

Secondary Fuses and Relays- Steering Column

Notice: Always replace fuses with ones of correct ampere rating to avoid electrical system damage.

The electrical circuits are protected by fuses. If a fuse blows, find out why before a new one is installed.

The secondary fuses and relays are situated in the back side of steering column panel.

To get accesses to the secondary fuses and relays:

1. Make the machine safe.
2. Remove the screws.
3. Remove the panel.

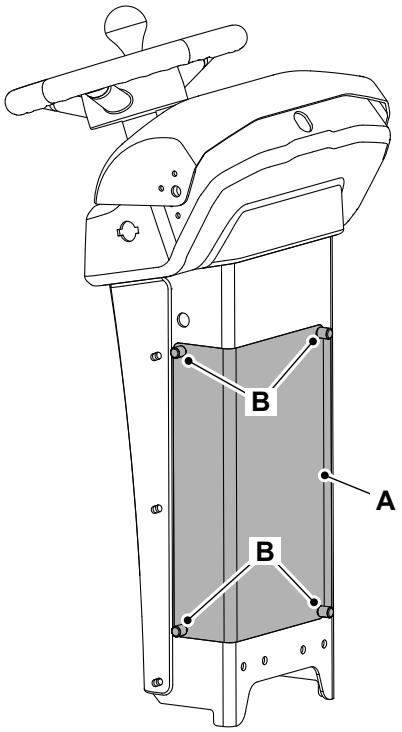

A Panel **B** Screws

Dimensions

(For: CT380 [STV PUN])

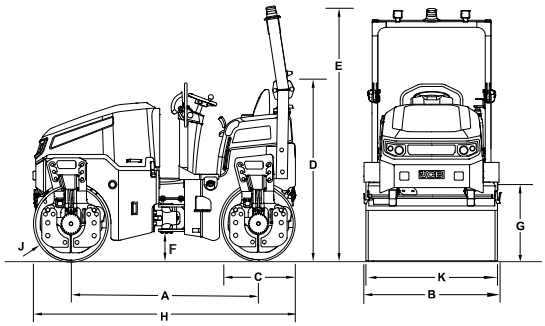

Item	Description	Value
A	Wheelbase	2,025mm
B	Overall width	1,410mm
C	Drum diameter	800mm
D	Height to the top of seat	1,885mm
E	Height with ROPS (including beacon)	2,690mm
F	Ground clearance	300mm
G	Kerb clearance	680mm
H	Total travel length	2,860mm
J	Drum thickness	17mm
K	Drum width	1,300mm

(For: CT430 [STV PUN])

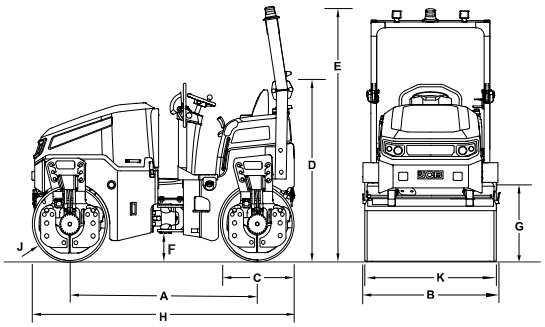

Item	Description	Value
A	Wheelbase	2,025mm
B	Overall width	1,510mm
C	Drum diameter	800mm
D	Height to the top of seat	1,885mm
E	Height with ROPS (including beacon)	2,690mm
F	Ground clearance	300mm
G	Kerb clearance	680mm
H	Total travel length	2,860mm
J	Drum thickness	17mm
K	Drum width	1,400mm

Notes: