QUICK REFERENCE GUIDE

VM118D, VM118PD

EN - 9828/GBX00 - ISSUE A - 08/2025

The information shown in this Quick Reference Guide is taken from the Operator's Manual (9851/4100).

This Quick Reference Guide DOES NOT replace the Operator's Manual. You MUST read ALL the disclaimers and safety and other instructions in the Operator's Manual before initially operating this product. Accordingly, no legal claims can be entertained based on the data, illustrations or descriptions in this Quick Reference Guide.

Component Locations

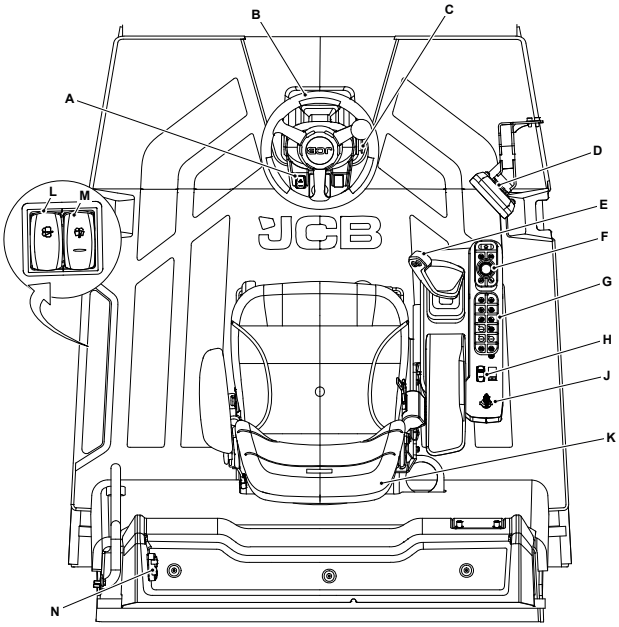

A Hazard switch (optional)
B Steering wheel
C Parkbrake switch
D Touch screen display
E Transmission drive lever
F Rotary controller
G 12 way keypad
H Throttle control switch
J Ignition switch
K Operator seat
L Front window wiper switch
M Rear window wiper switch
N Power socket

Instrument Panel

Touchscreen Overview

The touchscreen is located in right side of the operator seat on the right hand duct pillar and is the main interface between operator and machine.

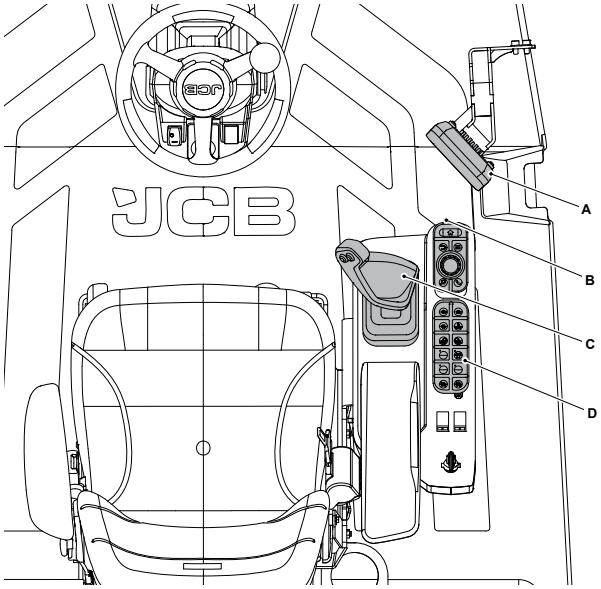

A Touchscreen display
B Rotary controller
C Transmission drive lever
D 12 way keypad

The touchscreen can display basic performance and function information (machine and engine speed, time, gradient, vibration frequency and fault conditions etc.), additional information (fuel consumption, hours, diagnostics) can be displayed on request from the operator.

The warning lights will illuminate on the central LCD (Liquid Crystal Display) whenever there is a fault. A buzzer sounds for 1s when there is a service fault permanently sounds when there is a critical fault. Critical faults cannot be cancelled, stop the machine immediately and contact your JCB dealer.

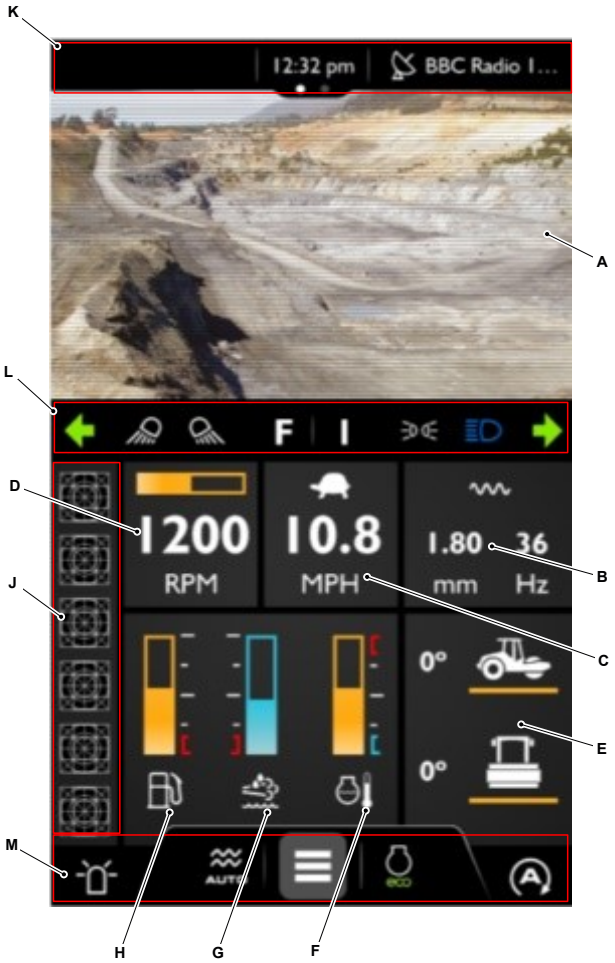

A Rear camera view (optional)

B Vibration frequency and amplitude gauge

C Vehicle speed gauge

D Engine RPM gauge

E Vehicle inclination gauge

F Coolant temperature gauge

G DEF level gauge (not applicable for VM118D)

H Fuel level gauge

J Tell tale ribbon

K Top ribbon

L Centre ribbon

M Bottom ribbon

Basic Controls

The drive lever has three positions: forward, neutral and reverse.

Use the drive lever for changing the driving direction, horn and to apply the vibration mode.

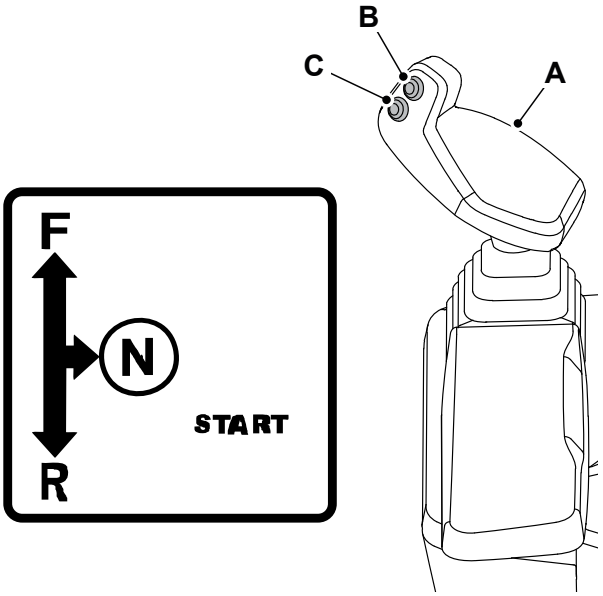

A Drive lever
B Vibration switch
C Horn switch
F Forward drive position
N Neutral position
R Reverse drive position

The neutral position is in the centre of the lever travel.

To operate the machine, move the drive lever forwards or backwards from the neutral position.

Move the lever forward to drive the machine forward and move the lever backward to reverse. The control is proportional (i.e. the further the lever is moved from the neutral position, the faster the machine will travel.

Move the lever to the neutral position to stop the machine.

When you start or stop the engine, make sure that the drive lever is in the neutral position.

Lifting Points

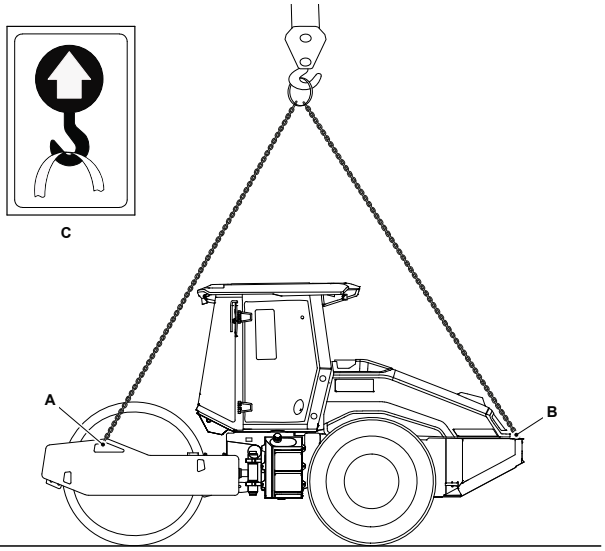

A Front Lift point

B Rear lift point

C Lifting label

Tie Down Points

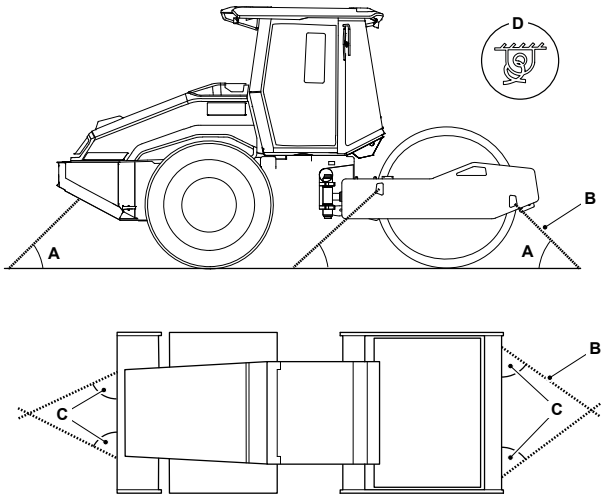

A Tie down angle 15° (minimum), 45° (maximum)
B Tie down accessories (chains, etc)
C Tie down angle 30° (minimum), 50° (maximum)
D Tie down decal

Lashing Capacity of Tie-down Accessories	**kN**
Minimum working capacity	117
Minimum breaking force	233

Lashing Capacity of Tie-down Accessories (using rubber mats)	**kN**
Minimum working capacity	68
Minimum breaking force	136

Operator Maintenance Tasks

Component	**Task**	**10**	**50**
Body and Framework			
Machine Generally	Check (Condition)/ Clean	O	O
Seat Belt	Check (Condition)	O	O
Safety Decals/Notes	Check (Condition)	O	O
ROPS (Roll-Over Protective Structure) and FOPS (Falling Object Protective Structure)Structure	Check (Condition)	O	O
Engine			
Oil Level	Check (Condition)	O	O
Oil Leaks	Check (Condition)	O	O
Fuel Level	Check (Level)	O	O
Fuel System			
Fuel System	Check (Leaks)	O	O
Primary Fuel Filter/Water Separator	Check (Level)/ Drain		O
Cooling System			
Coolant	Check (Level)	O	O
Coolant	Check (Leaks)	O	O
Coolant Hoses	Check (Condition)		O
Drum, Axles & Steering			
Drum Scrapers	Clean		O
Tyre Pressures/Condition	Check (Condition)	O	O
Tightness of Wheel Nuts(1)	Check (Condition)	O	O
Drum Distance Spacers / Buffer(2)	Check (Condition)		O
Hydraulics			
Hydraulic System	Check (Leaks)	O	O
Oil	Check (Level)	O	O
Electrics			
Operator seat occupancy switch and drive lever position switch	Check (Operation)	O	O
System Checks			
System Checks(3)	Check (Operation)	O	O

(1) Check the tightness of the wheel nuts every day for the first week (when machine is new), then thereafter 50 hours
(2) Check the tightness of the bolts/screws every day for the first week (when machine is new), then thereafter every 250 hours
(3) These checks need to be performed with the engine running using the following procedure.

Fuses and Relays

⚠ **Notice:** Always replace fuses with ones of correct ampere rating to avoid electrical system damage.

The electrical circuits are protected by fuses. If a fuses blows, find out why before a new one is installed.

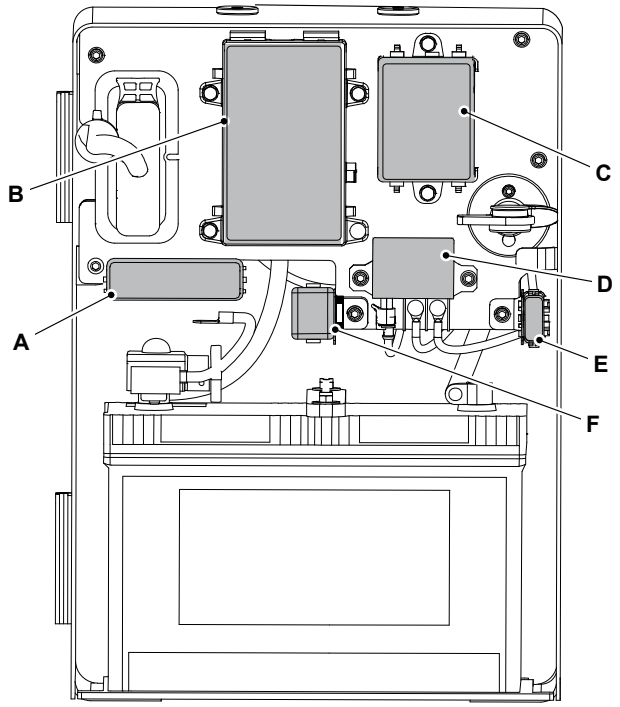

A Primary fuse box
B Secondary fuse and relay box
C Secondary relay box
D Relay
E Single fuse 1
F Single fuse 2

Primary Fuses

The primary fuse box is situated under the battery cover.

To access the fuses, open the battery cover.

Secondary Fuses and Relays

The secondary fuses and relays box is situated under the battery cover.

To access the secondary fuses and relays box, open the battery cover.

Cab Fuse Box

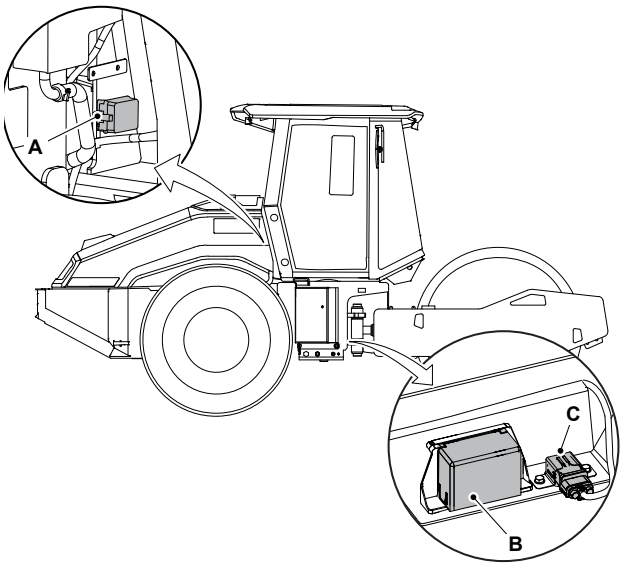

A Cab fuse box
B Pod box
C Cold start fuse box

The primary fuse box is situated under the engine cover.

To access the fuses, open the engine cover.

Pod Box

The pod box are situated in the bottom side of the rear chassis.

Dimensions

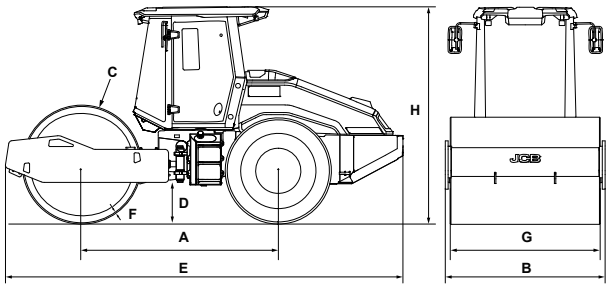

A	Wheel Base	2,906mm
B	Overall Width	2,240mm
C	Drum diameter	1,500mm
D	Ground Clearance	443mm
E	Total travel length	5,781mm
F	Drum shell thick-ness	28 +10 mm
G	Drum Width	2,100mm
H	Overall Height	3,009mm