USER MANUAL

© 2025 Enter your company name
Enter your company name

This page is intentionally left blank.
Remove this text from the manual
template if you want it completely blank.

1. Introduction 15

1.1 Contents 17

2. Machine Details 19

2.1 CAN Layout 20

2.2 Harness Layout 21

2.3 Battery Lead Layout 21

2.4 Earth Point Locations 22

2.4.1 Earth Point Platform 22

2.4.2 Earth Point Turn Table 23

2.4.3 Earth Point Chassis 24

2.4.4 Earth Point Generator 24

3. System Level Function 27

3.1 Ignition 28

3.2 Horn 29

3.3 Electric Pump 31

3.4 Emergency Stop 33

3.5 Engine Start & Stop 35

3.6 Grid Heater 37

3.7 Engine Speed 38

3.8 Engine Alternator 40

3.9 Air Filter Blocked 41

3.10 Crush Protection System 42

3.11 High Torque 45

3.12 Steering 46

3.13 Slew 47

3.14 Limit Switch Position 47

3.15 Platform Rotate 48

3.16 Overload 49

3.17 Main Boom 50

3.18 Leveling 51

3.19 Jib 52

3.20 Tilt 53

3.21 Telescope 54

© 2025 Enter your company name

3.22 Articulate 55
3.23 Generator 55
3.24 Fuel Level 56
3.25 Oscillating Axle 57
3.26 Override 57
3.27 Drive 58
3.28 Display Functions 59
3.28.1 Setting Time 59
3.28.2 Setting Date 60
3.28.3 Setting Units 62
3.28.4 Setting Brightness 62
3.28.5 Speed Configuration 63
3.28.6 Setting Travel Alarm 66
3.28.7 Setting Language 67
3.28.8 Setting Load Cell Calibration 69

4. Components 71
4.1 PF01 Electric Pump 72
4.2 PF02 Control System Primary 74
4.3 PF03 Grid Heater 76
4.4 Water In Fuel Sensor (WIF) 77
4.5 Fuel Pump 79
4.6 Fuel Level Sensor 81
4.7 Air Filter Vacuum Switch 83
4.8 Grid Heater 85
4.9 Grid Heater Relay 86
4.10 Main Boom Lower Limit switch 88
4.11 Main Boom Telescope retract Limit switch 91
4.12 Articulated Boom Lower Limit Switch 94
4.13 Slew Position Limit Switch 96
4.14 Alternator Resistor 99
4.15 Engine POD Box 100
4.16 Work Light (Optional Fit) 103
4.17 Batteries 105
4.18 White Noise Alarm 107
4.19 Beacon 109

© 2025 Enter your company name

4.20 Isolator 111
4.21 Kohler Engine ECU 113
4.22 Horn 114
4.23 Axle Lock Pressure Sensor 116
4.24 Platform and Jib Valve Block 118
4.25 Weight Sensor 120
4.26 DC Contactor 123
4.27 Tilt Sensor 125
4.28 Slew Limit Switch 127
4.29 Main Valve Block 129
4.30 Brake Valve Block 135
4.31 Electric Pump 138
4.32 Hydraulic Generator 140
4.33 AC Connector 143
4.34 Diagnostic Connector 145
4.35 Customer Telematics 147
4.36 LiveLink ECU 150
4.37 Base Bosch ECU 152
4.38 Transmission Pump 158
4.39 Platform & Control Panel 160
4.39.1 Foot Pedal Switch 161
4.39.2 Crush Protection 163
4.39.3 Platform Control Panel 165
4.39.4 Platform ECU 169
4.39.5 Platform Buzzer 175
4.39.6 Drive and Steer Joystick 177
4.39.7 Slew & Main Boom Up/Down Joystick 179
4.39.8 Main Boom Telescope Extend/Retract Switch(PCP) 181
4.39.9 Articulated Raise/Lower Switch(PCP) 183
4.39.10 Jib Up/Down Switch(PCP) 186
4.39.11 Platform Rotate Left/Right Switch(PCP) 189
4.39.12 Platform Leveling Up/Down Switch(PCP) 192
4.39.13 Potentiometer 195
4.39.14 Slew Acknowledgement Switch with LED 197
4.39.15 Horn Switch(PCP) 200
4.39.16 Emergency Stop Switch(PCP) 203
4.39.17 Engine Start Switch(PCP) 205

© 2025 Enter your company name

4.39.18 High Torque Selection Switch with LED 208
4.39.19 High Speed Switch with LED 211
4.39.20 Hydraulic Generator Switch with LED 214
4.39.21 Worklight Switch with LED 217
4.39.22 Electric Pump Switch (AUX) 220
4.39.23 Power LED 223
4.39.24 User Caution LED 226
4.39.25 Fault LED 228
4.39.26 Tilt Sensor LED 230
4.39.27 Overload LED 233
4.39.28 Low Fuel Level LED 235
4.39.29 PCP Interface Connectors 238
4.39.30 Jumper Bars 241
4.39.31 Din Rail Terminals - Small 244
4.39.32 USB Connection 252
4.40 Turntable Control Panel 254
4.40.1 Ignition Relay 255
4.40.2 Horn Relay 257
4.40.3 D+ Relay 259
4.40.4 Fusing Turntable Control Panel 261
4.40.5 Large Jumper Bar 267
4.40.6 Ignition Switch 270
4.40.7 Emergency STOP Switch(TCP) 272
4.40.8 Slew Switch(TCP) 274
4.40.9 Horn Switch(TCP) 277
4.40.10 Large Din Rail Terminal 279
4.40.11 Engine Start Switch(TCP) 282
4.40.12 Base/Platform Enable Switch 285
4.40.13 Main Boom Raise/Lower Switch(TCP) 288
4.40.14 Articulated Boom Raise/Lower switch(TCP) 290
4.40.15 Jib Raise/Lower Switch(TCP) 292
4.40.16 Main Boom Telescope Extend/Retract Switch(TCP) 294
4.40.17 Platform Rotate Left/Right Switch(TCP) 296
4.40.18 Platform Leveling Raise/Lower Switch(TCP) 298
4.40.19 Over Ride Switch 300
4.40.20 Buzzer(TCP) 303
4.40.21 Display 7'' 306
4.40.22 TCP Interface Connector 308
5. Machine Fault Codes 315
5.1 DTC ERROR CODE 316

© 2025 Enter your company name

5.1.1 B1001-17 324
5.1.2 B1005-17 325
5.1.3 B1006-17 326
5.1.4 B1007- 16 327
5.1.5 B1008-16 328
5.1.6 B1009-16 329
5.1.7 B1010-13 330
5.1.8 B1011-17 332
5.1.9 B1012-17 333
5.1.10 B1013-16 335
5.1.11 B1014-13 336
5.1.12 B1015-16 337
5.1.13 B1016-92 338
5.1.14 B1018-16 340
5.1.15 B1019-17 341
5.1.16 B1020-17 342
5.1.17 B1021-16 343
5.1.18 B1022-13 345
5.1.19 B1023-16 346
5.1.20 B1024-92 347
5.1.21 B1025-13 348
5.1.22 B1026-17 349
5.1.23 B1027-16 350
5.1.24 B1028-16 351
5.1.25 B1029-17 352
5.1.26 B1030-17 354
5.1.27 B1031-16 355
5.1.28 B1032-13 356
5.1.29 B1033-17 357
5.1.30 B1034-16 358
5.1.31 B1035-13 359
5.1.32 B1036-17 360
5.1.33 B1037-16 361
5.1.34 B1038-13 362
5.1.35 B1039-17 363
5.1.36 B1040-16 364
5.1.37 B1041-17 365
5.1.38 B1042-16 366
5.1.39 B1043-17 367
5.1.40 B1044-16 368
5.1.41 B1045-13 369

© 2025 Enter your company name

5.1.42 B1046-17 370
5.1.43 B1047-16 371
5.1.44 B1048-17 372
5.1.45 B1049-16 373
5.1.46 B1050-17 375
5.1.47 B1051-16 376
5.1.48 B1052-24 377
5.1.49 B1053-17 378
5.1.50 B1054-16 379
5.1.51 B1055-17 380
5.1.52 B1056-16 381
5.1.53 B1058-17 382
5.1.54 B1059-16 383
5.1.55 B1060-13 384
5.1.56 B1061-17 386
5.1.57 B1062-16 387
5.1.58 B1063-92 388
5.1.59 B1064-17 389
5.1.60 B1065-16 390
5.1.61 B1066-24 391
5.1.62 B1067-17 392
5.1.63 B1069-17 393
5.1.64 B1070-16 394
5.1.65 B1071-17 395
5.1.66 B1072-17 397
5.1.67 B1073-92 398
5.1.68 B1074-16 399
5.1.69 B1075-16 400
5.1.70 B1076-17 401
5.1.71 B1077-16 402
5.1.72 B1078-13 403
5.1.73 B1079-17 404
5.1.74 B1080-17 405
5.1.75 B1081-16 406
5.1.76 B1082-13 407
5.1.77 B1083-17 408
5.1.78 B1084-17 409
5.1.79 B1086-13 410
5.1.80 B1087-17 410
5.1.81 B1088-17 411
5.1.82 B1089-16 412

© 2025 Enter your company name

5.1.83 B1090-13 413
5.1.84 B1091-17 414
5.1.85 B1092-17 415
5.1.86 B1093-16 416
5.1.87 B1094-13 417
5.1.88 B1095-92 418
5.1.89 B1096-17 419
5.1.90 B1097-17 420
5.1.91 B1098-92 421
5.1.92 B1099-16 422
5.1.93 B1100-16 423
5.1.94 B1101-17 424
5.1.95 B1102-17 425
5.1.96 B1103-92 426
5.1.97 B1104-16 427
5.1.98 B1105-16 428
5.1.99 B1106-17 430
5.1.100 B1107-17 431
5.1.101 B1108-92 432
5.1.102 B1109-16 433
5.1.103 B1110-16 435
5.1.104 B1111-17 436
5.1.105 B1112-17 437
5.1.106 B1113-92 438
5.1.107 B1114-16 440
5.1.108 B1115-16 441
5.1.109 B1116-17 442
5.1.110 B1117-17 443
5.1.111 B1118-92 445
5.1.112 B1119-16 446
5.1.113 B1120-16 447
5.1.114 B1121-17 449
5.1.115 B1122-17 450
5.1.116 B1123-92 451
5.1.117 B1124-16 453
5.1.118 B1125-16 454
5.1.119 B1126-17 455
5.1.120 B1127-17 456
5.1.121 B1128-16 457
5.1.122 B1129-13 458
5.1.123 B1130-16 459

© 2025 Enter your company name

5.1.124 B1131-2F 461
5.1.125 B1133-17 462
5.1.126 B1134-16 463
5.1.127 B1135-13 464
5.1.128 B1136-16 465
5.1.129 B1138-17 466
5.1.130 B1139-17 467
5.1.131 B1140-16 468
5.1.132 B1141-13 469
5.1.133 B1142-16 470
5.1.134 B1143-92 471
5.1.135 B1144-17 472
5.1.136 B1145-16 473
5.1.137 B1146-17 474
5.1.138 B1147-16 475
5.1.139 B1148-17 476
5.1.140 B1149-16 478
5.1.141 B1150-17 479
5.1.142 B1151-16 480
5.1.143 B1154-16 481
5.1.144 B1167-13 482
5.1.145 B1168-16 483
5.1.146 B1169-13 484
5.1.147 B1170-16 485
5.1.148 B1171-13 486
5.1.149 B1172-16 487
5.1.150 B1173-13 488
5.1.151 B1174-16 489
5.1.152 B1175-13 490
5.1.153 B1176-16 491
5.1.154 B1177-16 492
5.1.155 B1178-13 493
5.1.156 B1179-13 494
5.1.157 B1180-16 495
5.1.158 B1181-16 496
5.1.159 B1182-13 497
5.1.160 B1183-16 498
5.1.161 B1184-13 499
5.1.162 B1186-16 500
5.1.163 B1187-13 501
5.1.164 B1188-16 502

© 2025 Enter your company name

5.1.165 B1189-13 503
5.1.166 B1190-16 504
5.1.167 B1191-17 506
5.1.168 B1192-16 507
5.1.169 B1193-13 508
5.1.170 B1194-16 509
5.1.171 B1195-13 510
5.1.172 B1196-16 511
5.1.173 B1197-13 512
5.1.174 B1198-16 513
5.1.175 B1199-17 514
5.1.176 B1202-16 515
5.1.177 B1203-13 516
5.1.178 B1204-16 517
5.1.179 B1205-13 518
5.1.180 B1206-17 519
5.1.181 B1207-16 520
5.1.182 B1208-24 521
5.1.183 B1209-17 522
5.1.184 B1210-16 523
5.1.185 B1211-24 524
5.1.186 B1212-17 525
5.1.187 B1213-16 526
5.1.188 B1214-24 527
5.1.189 B1215-17 528
5.1.190 B1216-16 529
5.1.191 B1217-24 530
5.1.192 B1221-17 531
5.1.193 B1222-16 533
5.1.194 B1223-17 534
5.1.195 B1224-16 535
5.1.196 B1225-2F 536
5.1.197 B1227-17 538
5.1.198 B1228-16 539
5.1.199 B1232-17 540
5.1.200 B1233-16 541
5.1.201 B1235-17 542
5.1.202 B1236-2F 543
5.1.203 B1238-2F 545
5.1.204 B1239-17 546
5.1.205 B1240-16 547

© 2025 Enter your company name

5.1.206 B1241-24 548
5.1.207 B1242-17 549
5.1.208 B1243-17 550
5.1.209 B1244-92 551
5.1.210 B1245-16 552
5.1.211 B1246-16 553
5.1.212 B1247-17 554
5.1.213 B1248-17 555
5.1.214 B1249-92 556
5.1.215 B1250-16 557
5.1.216 B1251-16 557
5.1.217 B1252-17 558
5.1.218 B1253-17 559
5.1.219 B1254-92 560
5.1.220 B1255-16 561
5.1.221 B1256-16 562
5.1.222 B1257-17 563
5.1.223 B1258-17 564
5.1.224 B1259-92 565
5.1.225 B1260-16 566
5.1.226 B1261-16 568
5.1.227 B1262-17 569
5.1.228 B1263-17 570
5.1.229 B1264-92 571
5.1.230 B1265-16 572
5.1.231 B1266-16 573
5.1.232 B1267-17 574
5.1.233 B1268-16 575
5.1.234 B1269-16 577
5.1.235 B1270-17 578
5.1.236 B1273-17 579
5.1.237 B1274-16 580
5.1.238 B1275-24 581
5.1.239 B1276-24 582
5.1.240 B1277-24 583
5.1.241 B1278-17 585
5.1.242 B1279-16 586
5.1.243 B1281-16 588
5.1.244 B1283-16 589
5.1.245 B1284-16 590
5.1.246 B1285-16 591

© 2025 Enter your company name

5.1.247 B1287-2F 592
5.1.248 B1288-2F 593
5.1.249 B1300-2F 594
5.1.250 B1301-2F 596
5.1.251 B1302-2F 597
5.1.252 B1303-2F 598
5.1.253 B1304-24 599
5.1.254 B1305-24 600
5.1.255 B1307-24 600
5.1.256 B1308-24 601
5.1.257 B1309-24 602
5.1.258 B1310-24 603
5.1.259 B1312-24 604
5.1.260 B1314-24 605
5.1.261 B1316-24 606
5.1.262 B1317-24 607
5.1.263 B1318-24 608
5.1.264 B1319-24 610
5.1.265 B1320-24 611
5.1.266 B1321-24 612
5.1.267 B1329-13 614
5.1.268 B1330-16 615
5.1.269 B1331-13 616
5.1.270 B1332-17 618
5.1.271 B1333-16 618
5.1.272 B1334-13 619
5.1.273 B1335-17 620
5.1.274 B1336-16 621
5.1.275 B1337-13 622
5.1.276 B1338-17 623
5.1.277 B1339-16 625
5.1.278 B1340-13 626
5.1.279 B1341-17 627
5.1.280 B1342-16 628
5.1.281 B1344-17 629
5.1.282 B1345-16 630
5.1.283 B1347-17 631
5.1.284 B1348-16 632
5.1.285 B1349-13 633
5.1.286 B1350-17 634
5.1.287 B1351-16 635

© 2025 Enter your company name

5.1.288 B1353-16 636
5.1.289 B1354-13 637
5.1.290 B1355-16 638
5.1.291 B1356-13 639
5.1.292 B1357-16 640
5.1.293 B1358-13 641
5.1.294 U0411-87 642
5.1.295 U1293-87 643
5.1.296 U1294-56 644
5.1.297 U1295-41 646
5.1.298 U1296-87 647
5.1.299 U1298-41 648
5.1.300 U1299-87 650
5.1.301 U1323-56 651
5.1.302 U1324-56 653
5.1.303 U1325-56 654
5.1.304 U1326-41 655
5.1.305 U1327-41 657
5.1.306 U1328-41 658

6. General Sensor Fault Table 661

6.1 General Sensor Fault Table 662

7. Software Flashing 663

7.1 Display Flashing 664

7.2 Bosch ECU Flashing 666

8. Service Master Tools Help 673

8.1 Install Software - Service Master 674

8.2 Using JCB Service Master 676

8.3 Using DLA (Data Link Adapter) 677

8.4 Diagnostic Tool 681

8.5 Flashloader Tool 682

Index 0

© 2025 Enter your company name

Introduction

1 Introduction



AJ48D HELPFILE

© 2025 Enter your company name

1.1 Contents

Contents
Introduction

- Support Files
- Components
- Machine ECU Fault Codes

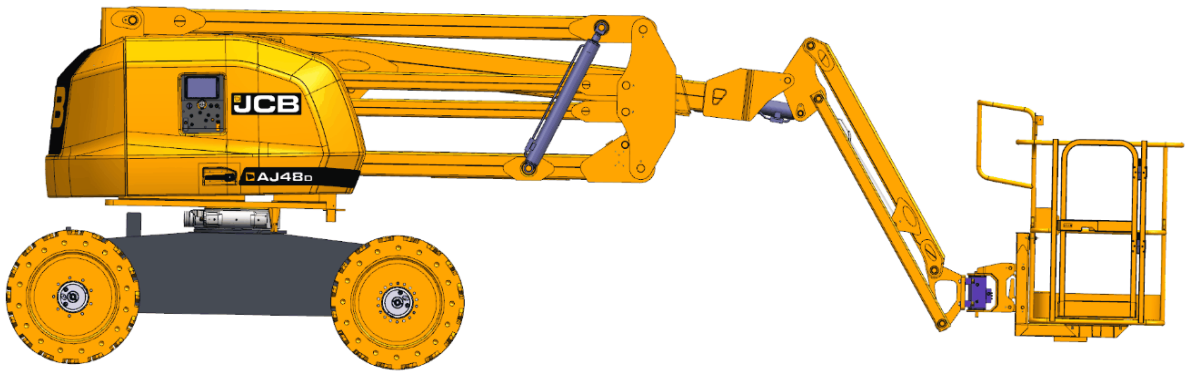

© 2025 Enter your company name

This page is intentionally left blank.
Remove this text from the manual
template if you want it completely blank.

Machine Details

2 Machine Details



2.1 CAN Layout

© 2025 Enter your company name

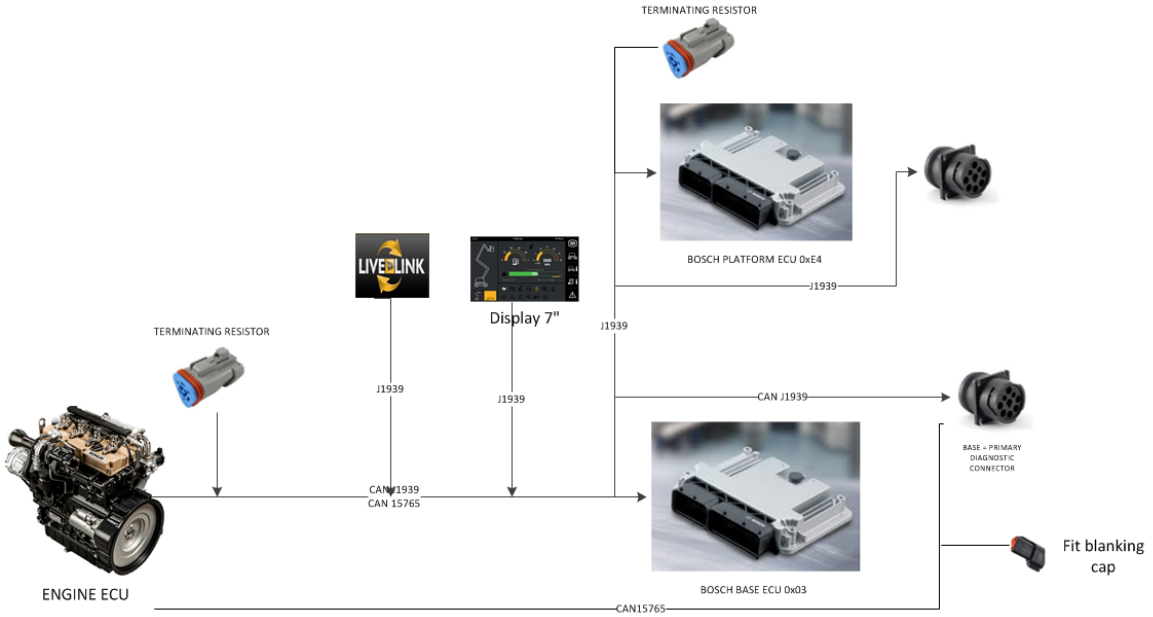

2.2 Harness Layout

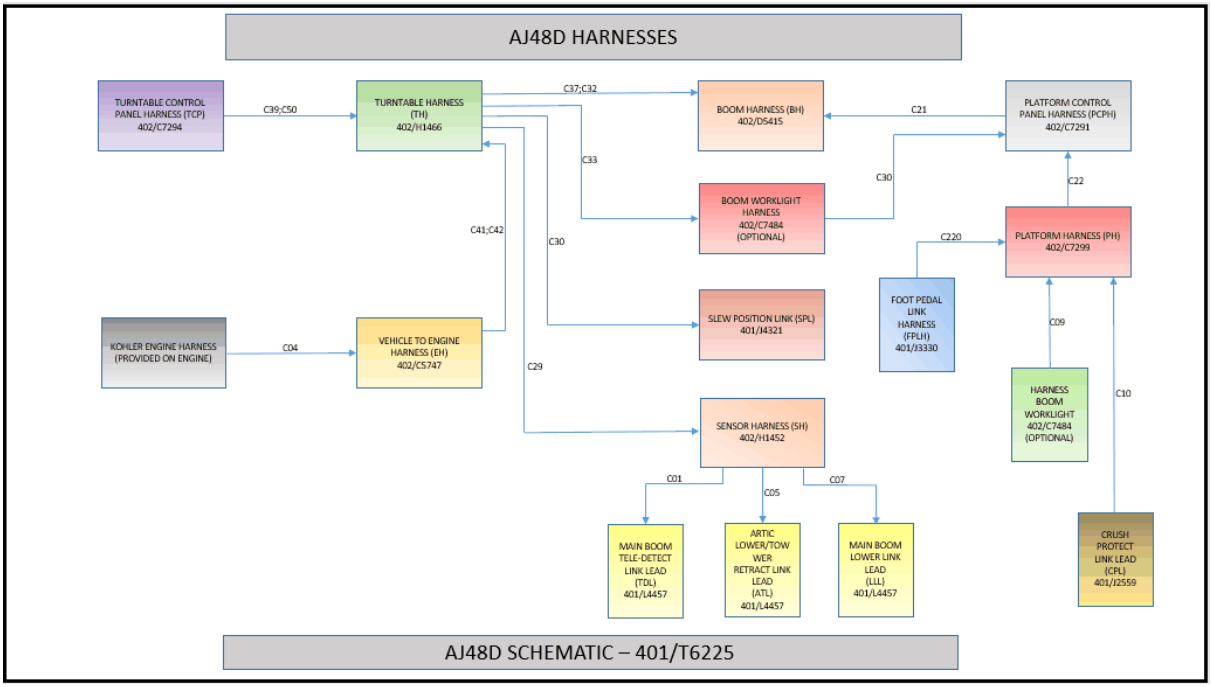

2.3 Battery Lead Layout

© 2025 Enter your company name

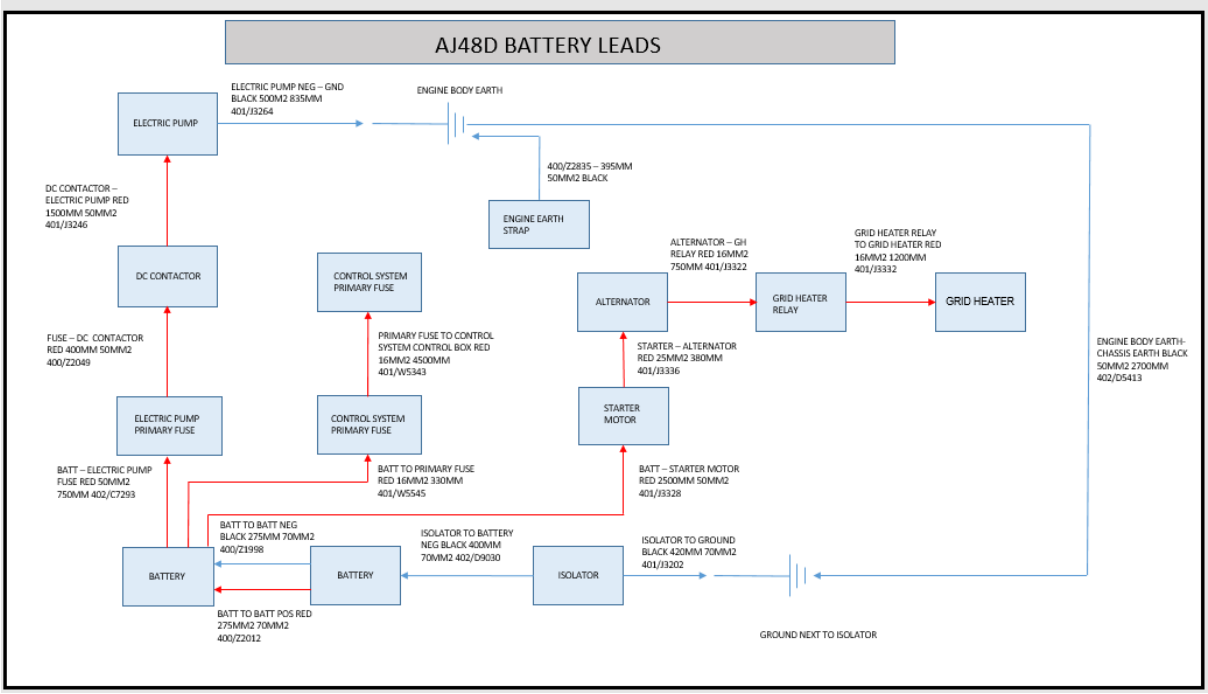

2.4 Earth Point Locations

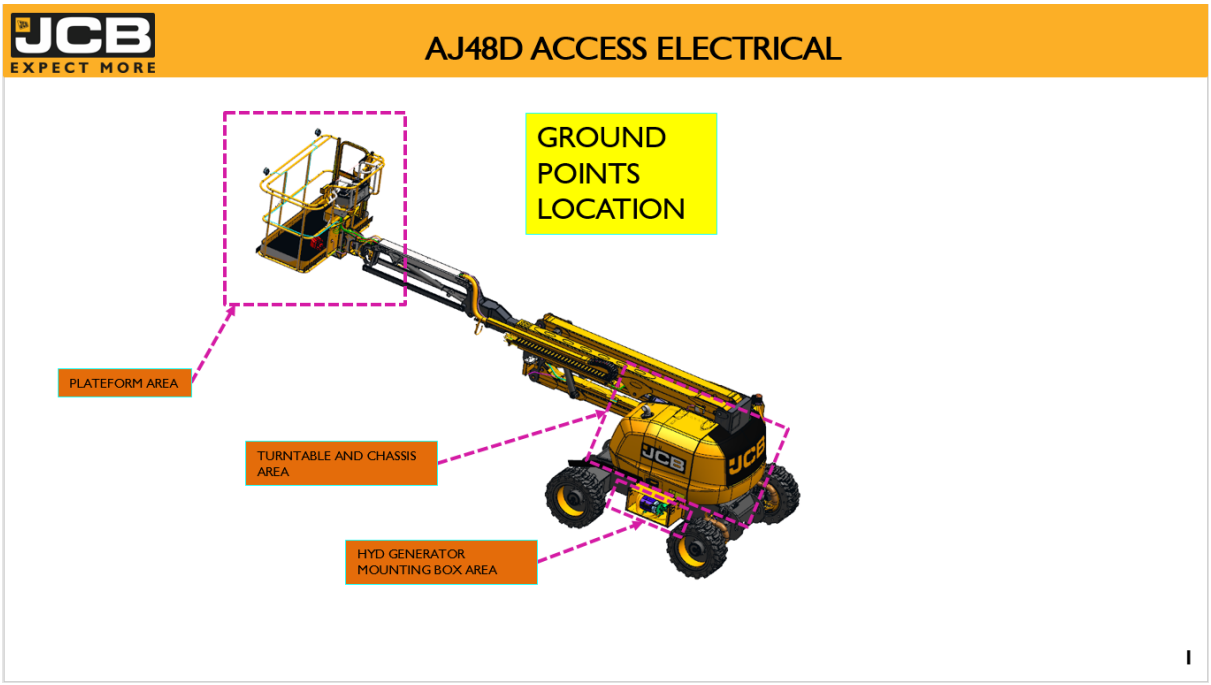

2.4.1 Earth Point Platform

© 2025 Enter your company name

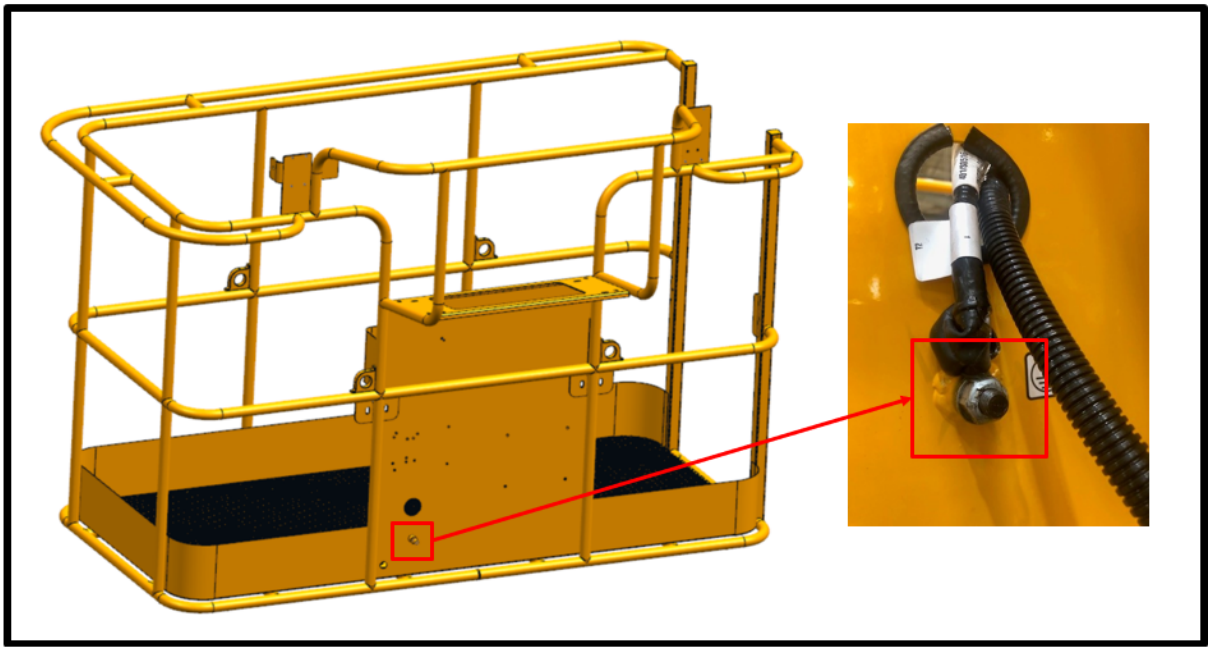

2.4.2 Earth Point Turn Table

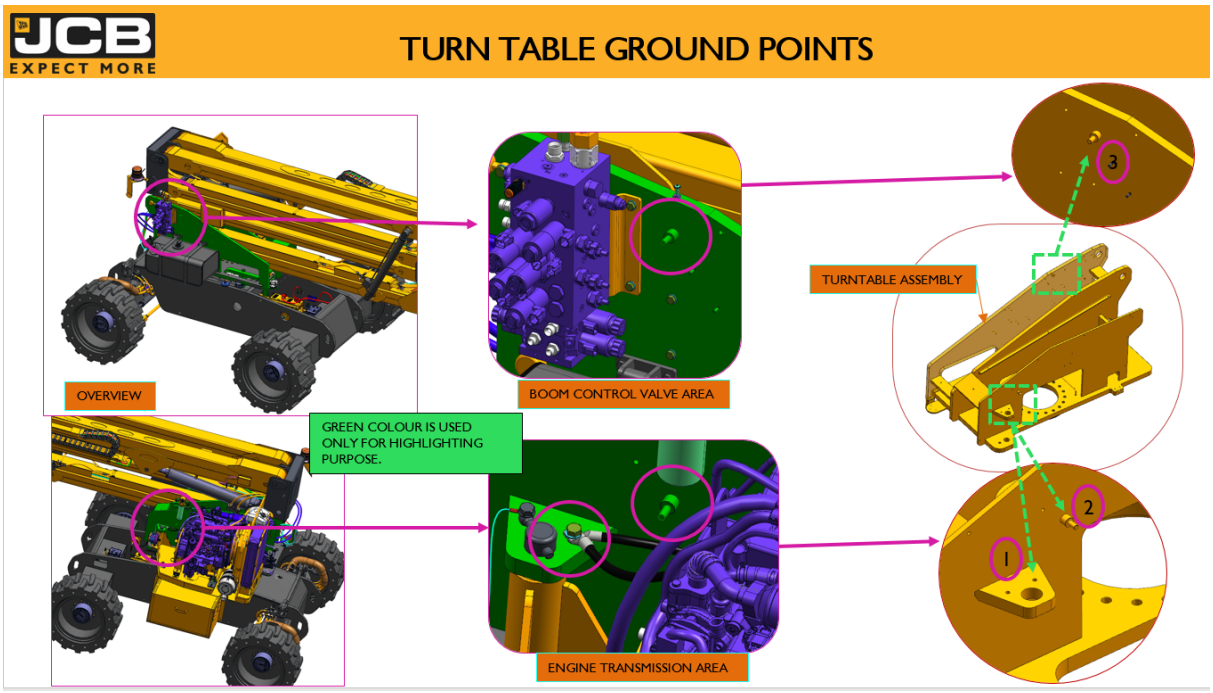

© 2025 Enter your company name

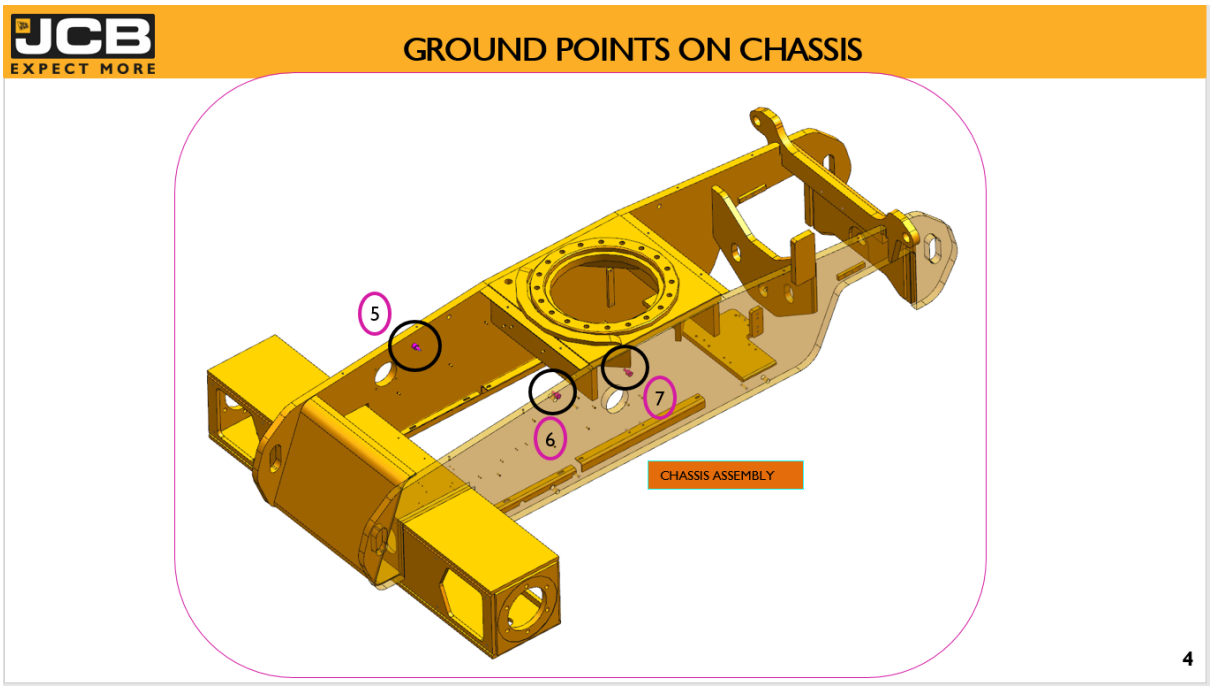

2.4.3 **Earth Point Chassis**

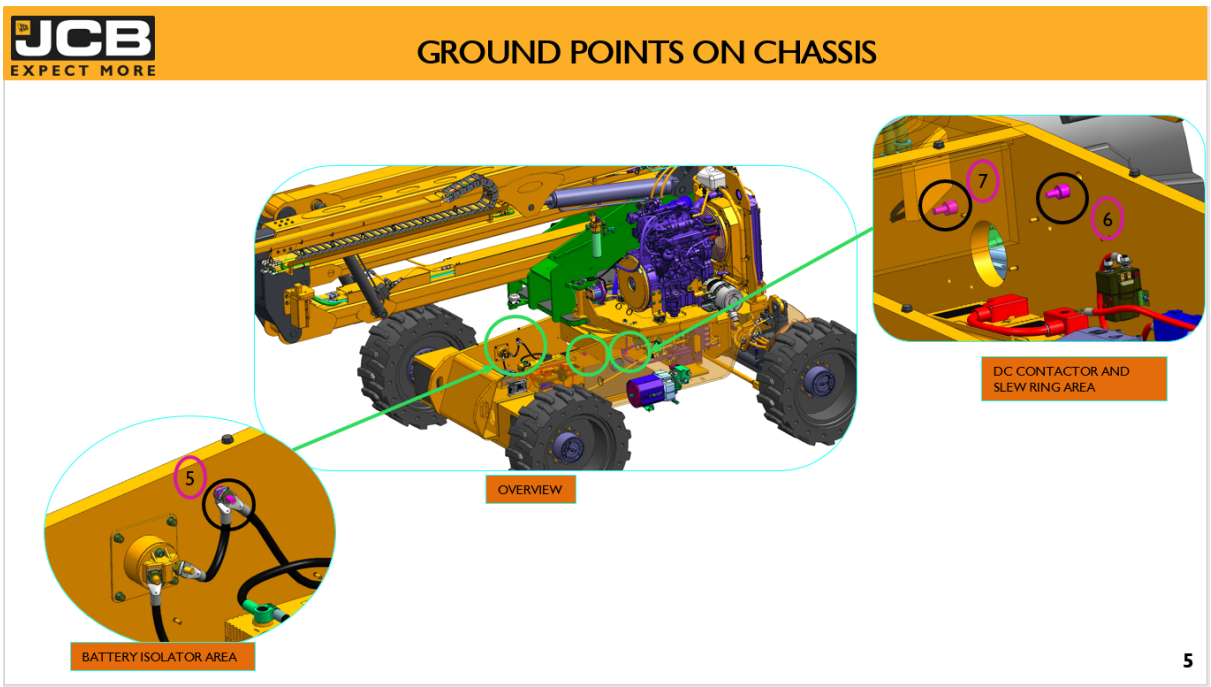

2.4.4 **Earth Point Generator**

© 2025 Enter your company name

GROUND POINTS INSIDE HYD GENERATOR BOX

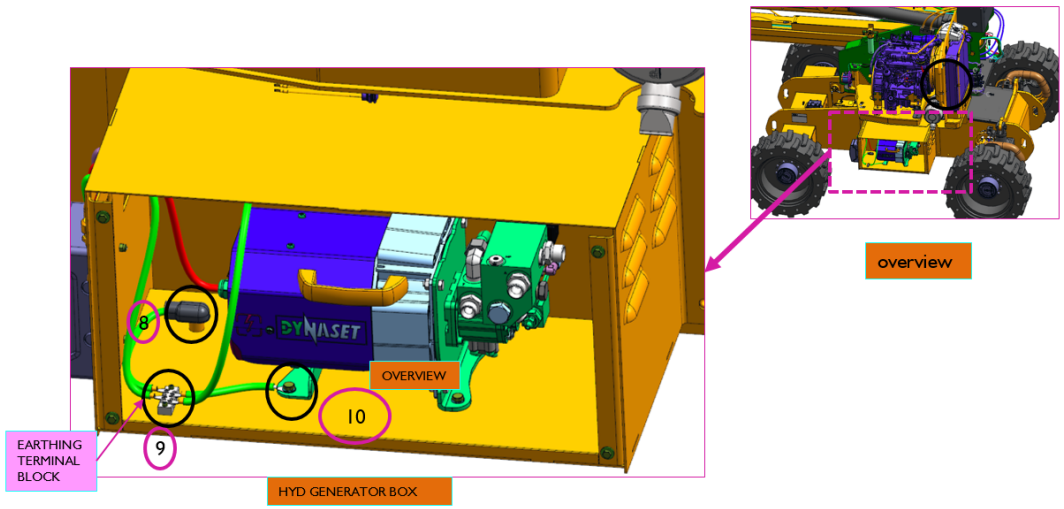

6

© 2025 Enter your company name

This page is intentionally left blank.
Remove this text from the manual
template if you want it completely blank.

System Level Function

3 System Level Function

3.1 Ignition

Function

- The ignition turns on and off the main power of the machine.
- The system diagram is assuming the isolator key is fitted and 'ON'
- The diagram below shows the main components that will turn on when the ignition is cycled 'ON'
- When the key is turned on there should be 3 beeps from the base and platform buzzers

Signal

- The main power is fed from the battery into the lower control box through an 80A primary fuse and into the large din rail terminal S11-21.
- The din rail terminals are connected together with large jumper bars to S11-24, which then fed FU16_TCP (7.5A) Fuse.
- FU16_TCP then feds power to the ignition key. This signal is a permanent fed as long as there is power in the batteries and no fuse is blown.
- From the ignition key feds S11-9 din rail terminal that feeds out to the 4 ignition relays.

- **Parts in Circuit**

Ignition Switch
Base Bosch ECU
Platform ECU
Large Jumper Bar
Large Din Rail Terminal
PF02 - Control System Primary

System diagram
Below shows an overview on what the operator should see when the ignition key is set to the 'ON' position.

© 2025 Enter your company name

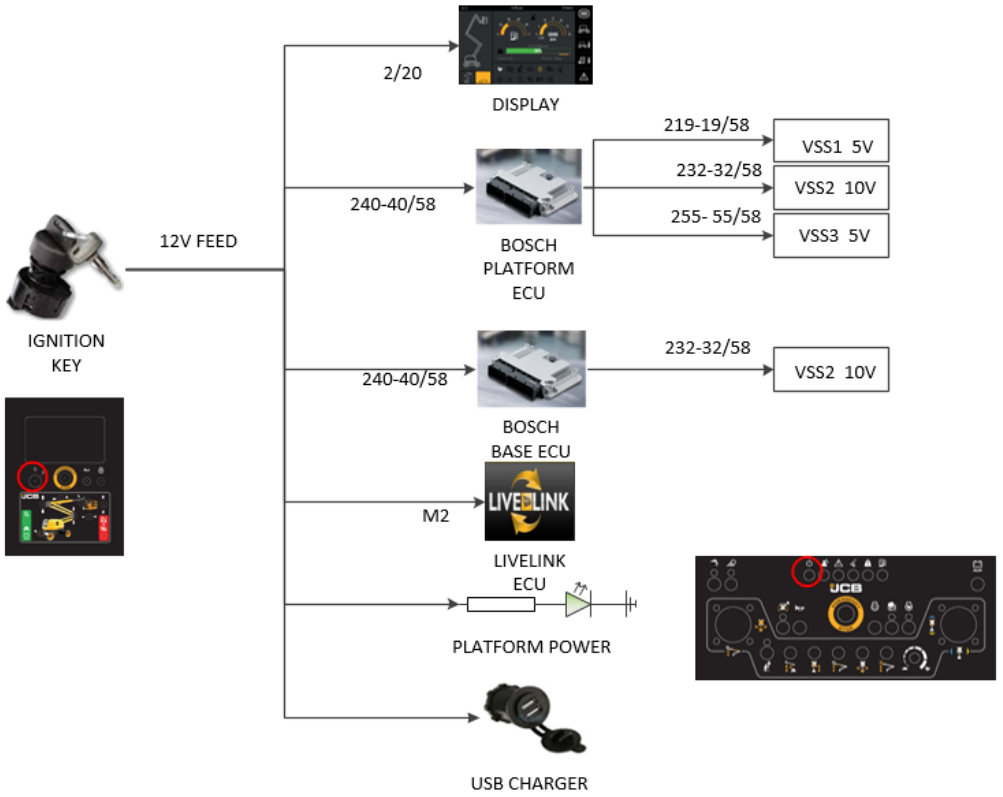

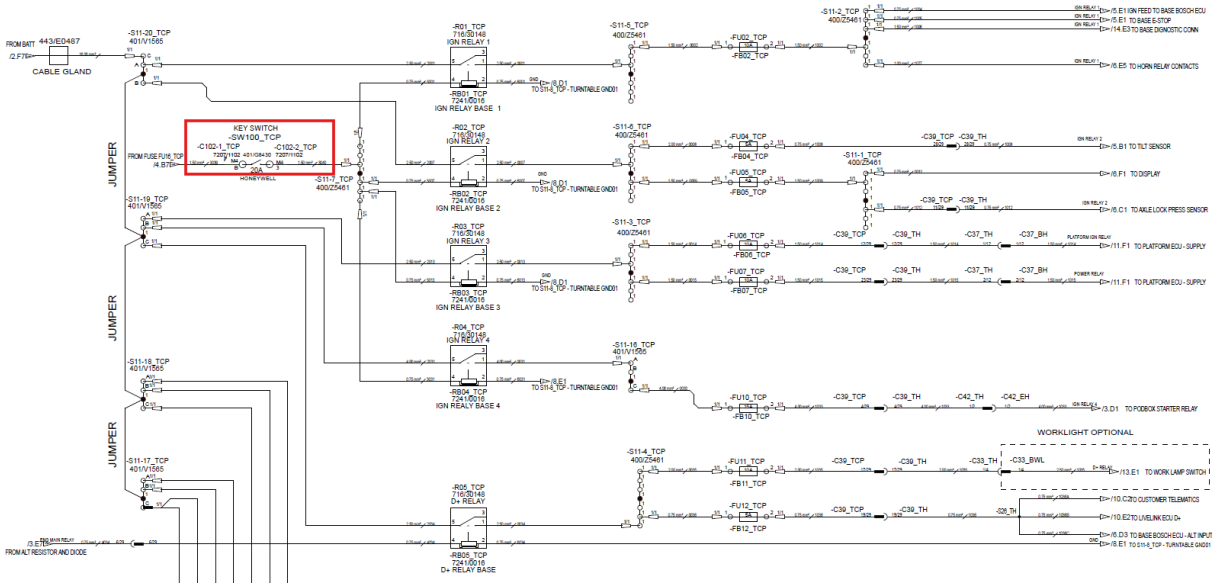

3.2 Horn

Function

- The horn can be pressed from the Base or Platform control station. There is only one horn output which is below the base control box.

© 2025 Enter your company name

- The horn must be working correctly for safe machine operation.
- The horn can be operated from the platform and base control panel. The horn is located under the turntable. An improperly functioning horn may prevent the operator from alerting the ground personnel of hazards or unsafe conditions.
- Use the horn wherever necessary, particularly at blind corners.
- **Parts in system**

  Base Bosch ECU
  Platform ECU
  Horn Switch(TCP)
  Horn Switch(PCP)
  Horn Relay
  Horn

System Diagram

© 2025 Enter your company name

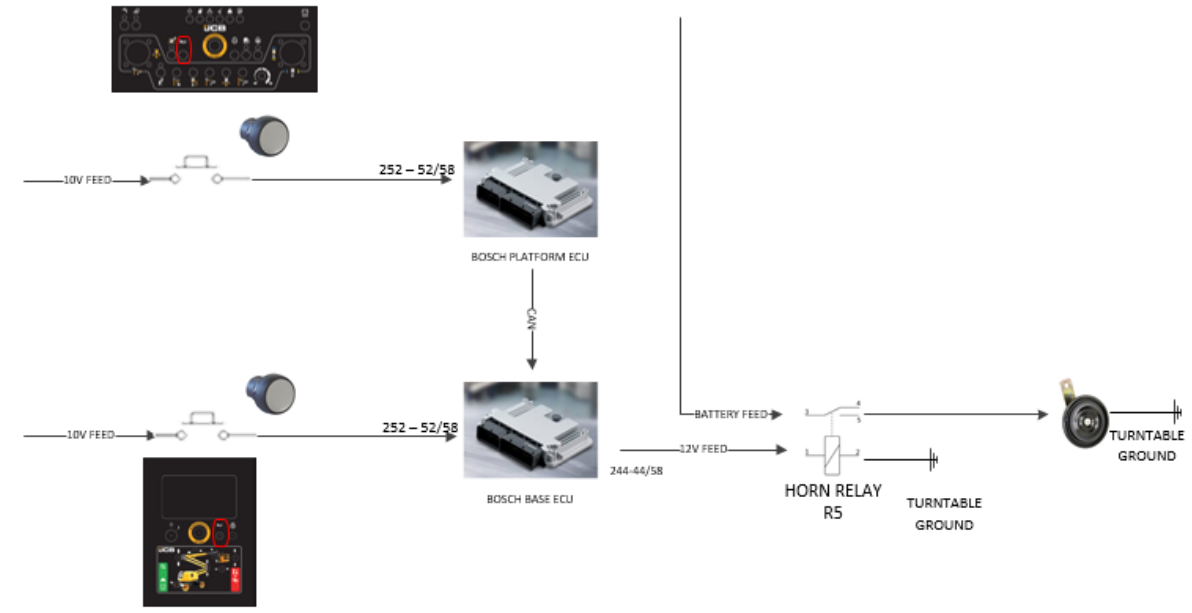

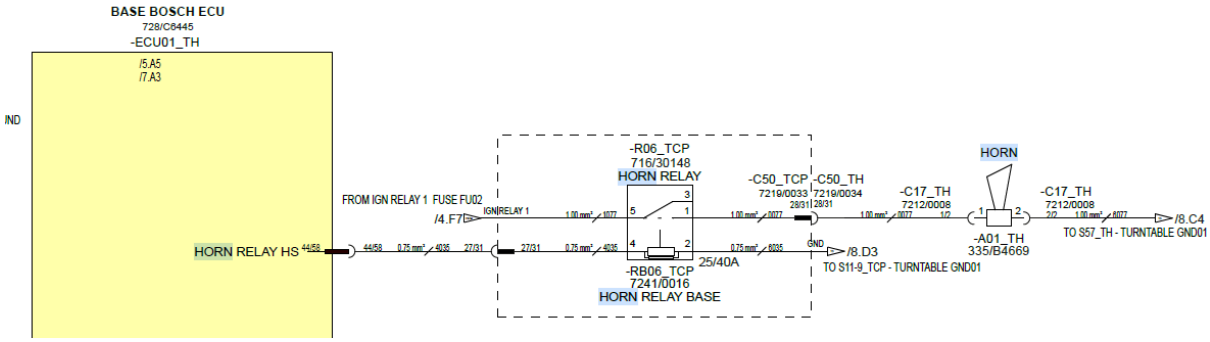

3.3 Electric Pump

Function

The electric pump is there for recovering an operator or very low usage of the booms. Using the recovery system will be explained in override procedure

The isolator and ignition key must both be in the 'ON' position.It is advised that only one function at a time should be used.

To use the electric pump from the base control station.

- The engine should not be running,
- Press and hold base enable switch
- Operate function button while keeping the base enable pressed
- Only one function may be operated at a time

© 2025 Enter your company name

- To use the electric pump from the platform
- Platform enable button on base control station (default position)
- Press the foot pedal and hold
- Press the AUX button and hold
- Press required function

The following functions will not work with the electric pump:

- Drive
- Steer
- Hydraulic Generator

System Diagram

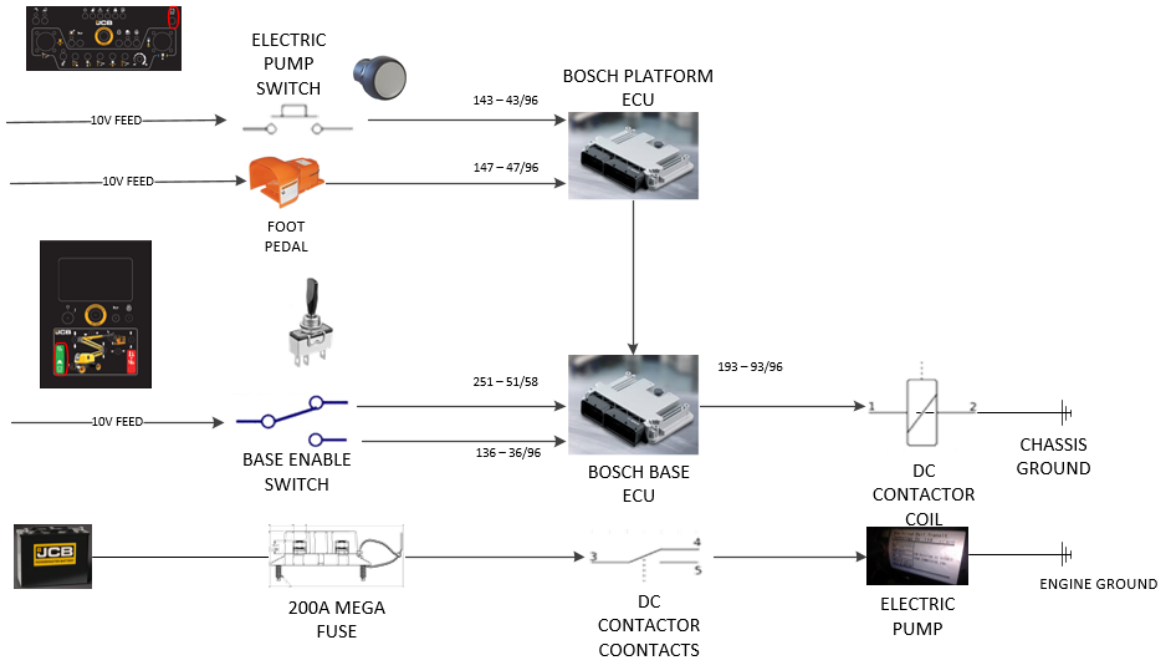

© 2025 Enter your company name

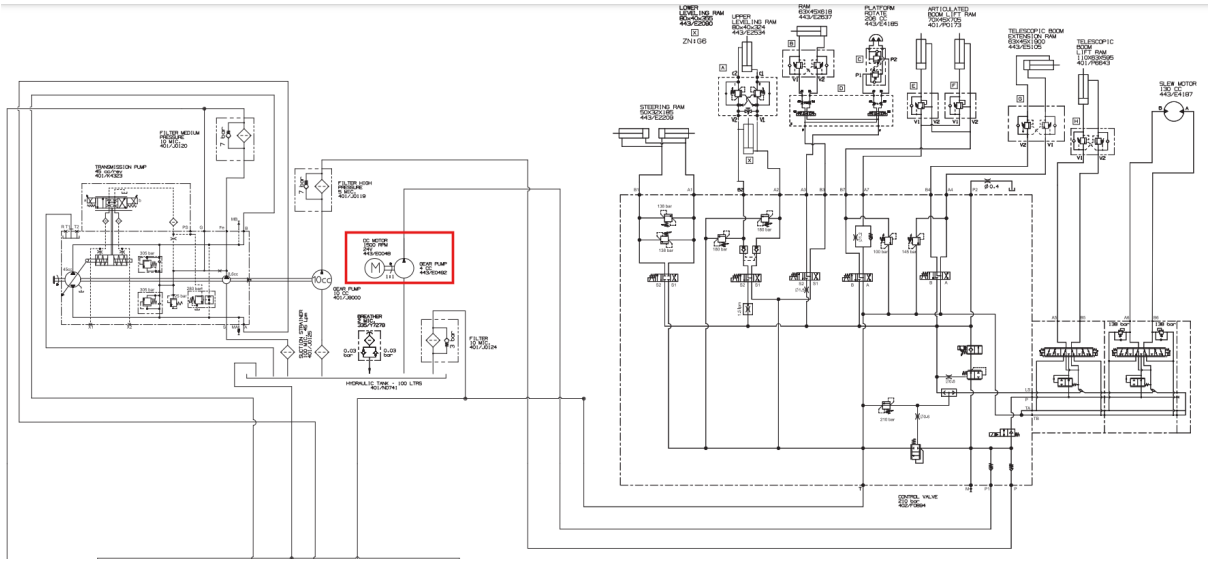

3.4 Emergency Stop

Function

The emergency stop is the for the operator to stop all machine movement immediately.

This will not turn power on the machine off and only disable outputs from the machine controllers.

System Diagram

© 2025 Enter your company name

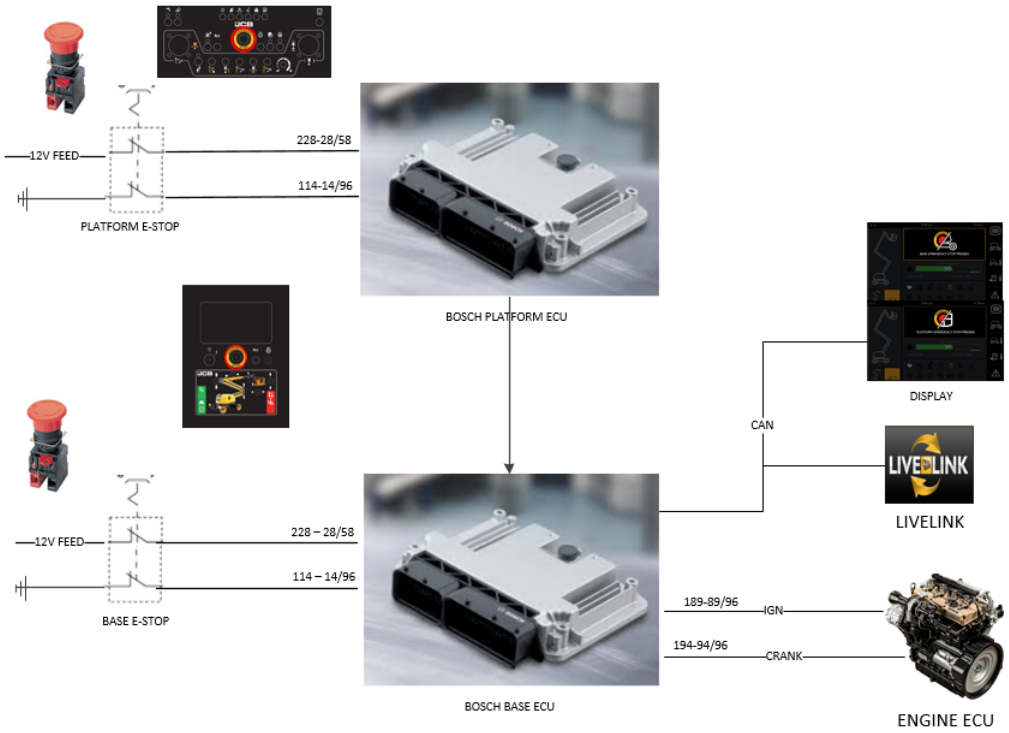

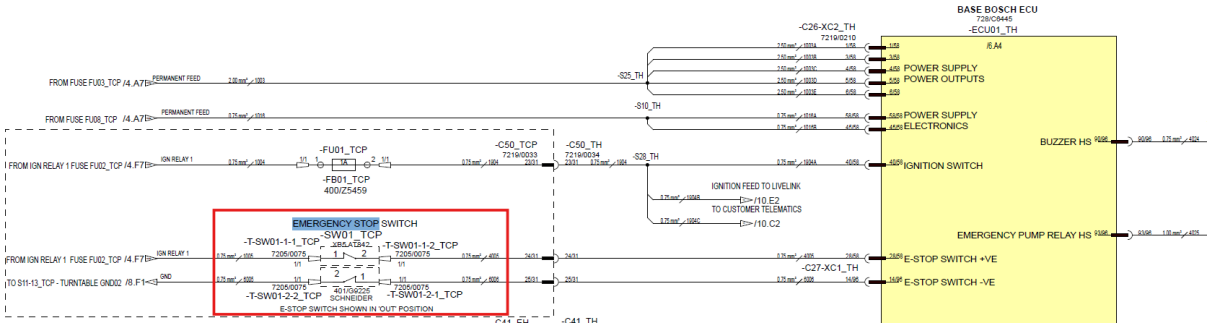

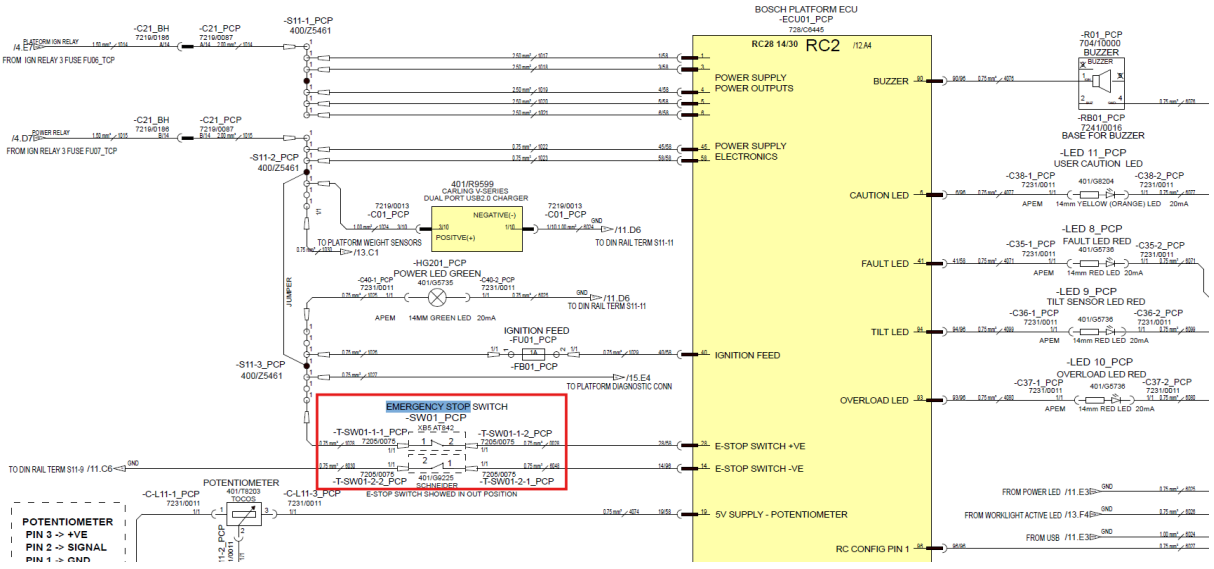

© 2025 Enter your company name

3.5 Engine Start & Stop

Function

- This function is to start and stop the engine.
- The isolator and ignition should be in the 'ON' position
- There should be no enable pressed by the operator, this is base enable or the foot pedal at the platform.
- The E-stop should be un-pressed
- The should be no other buttons pressed at same time as engine start.
- The engine may be started or stopped from either control station
- The engine Ignition is controlled via Bosch base ecu.

Signal

- From either control station the engine start button is fed from the 10V feed from the respective ECU.
- When the push button is pressed a 10V signal is sent to the ecu. (this is a momentary signal while pressed)
- The platform ecu sends this to base ecu and the base ecu makes a decision if it is safe to start the engine.
- The Bosch ecu will send out an RPM value over CAN 1 to the engine and also a hardwired crank signal via pin 94/96
- When the engine is ready to start this will ground pin B6 in the engine harness which will allow the starter relay (in pod box) to engage allow power to travel to the starter motor via pin G2 of the engine harness

Logical Overview

© 2025 Enter your company name

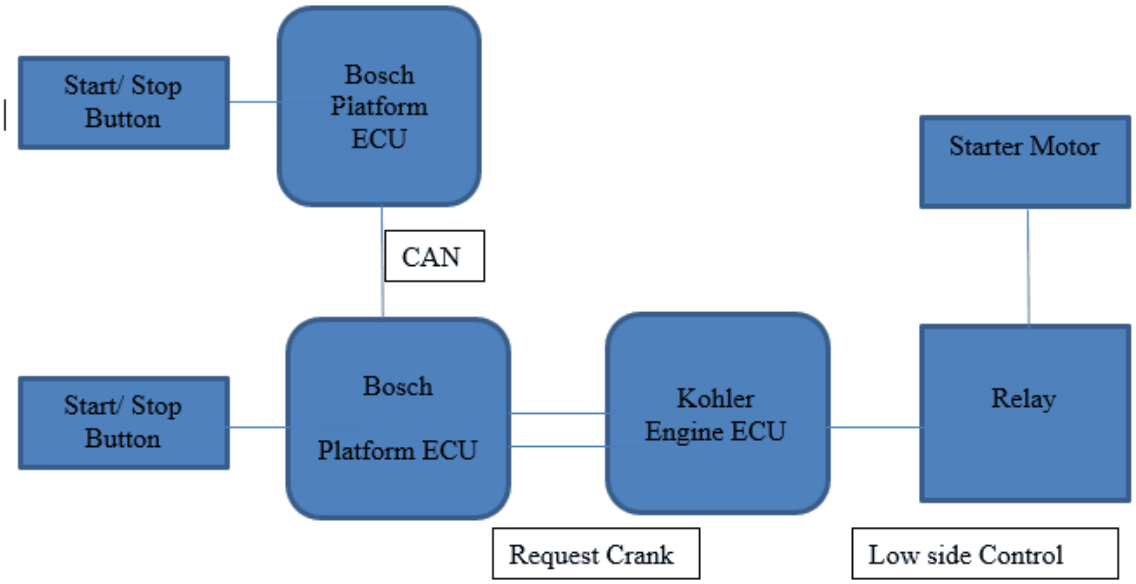

System Diagram

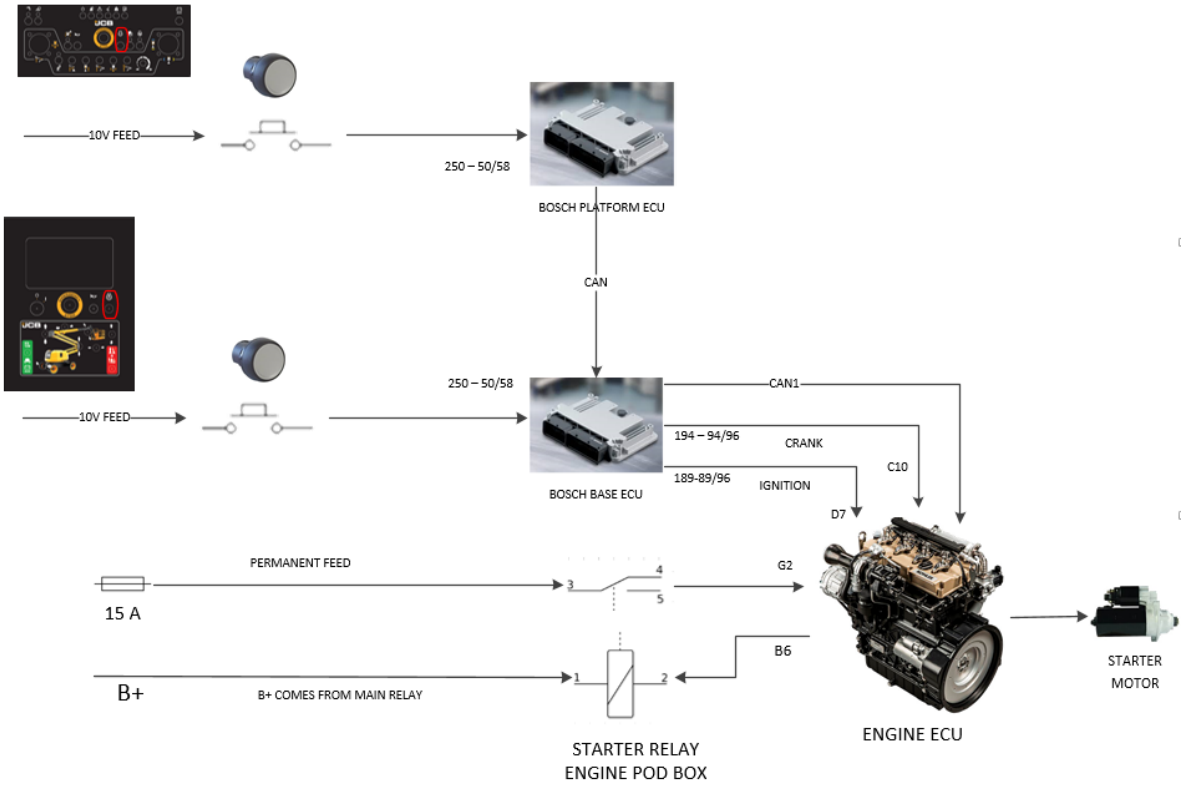

© 2025 Enter your company name

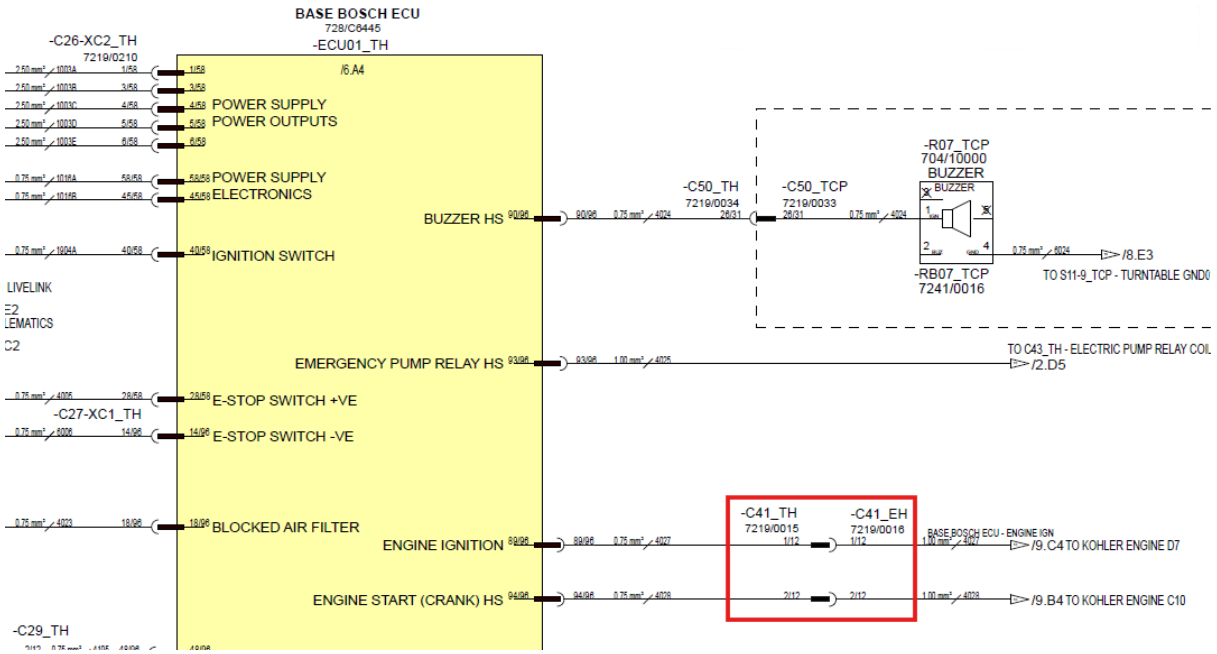

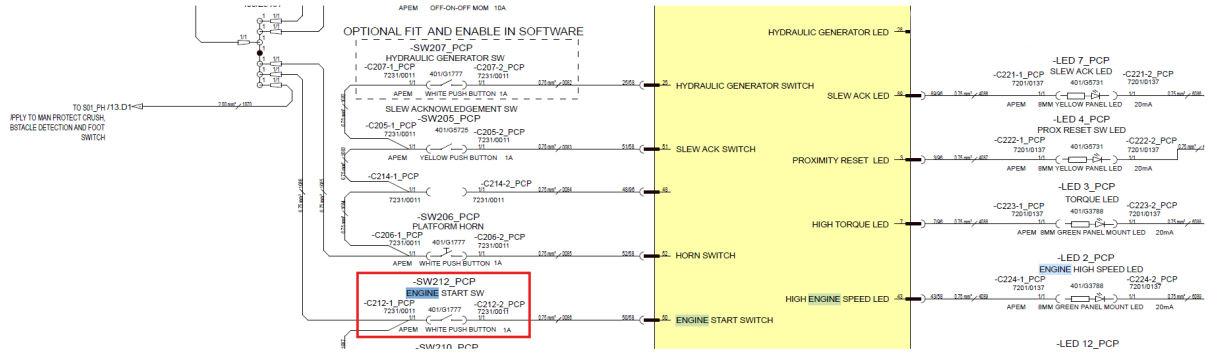

3.6 Grid Heater

Function

- The grid heater is to warm the engine in cold conditions.
- This is optional fit and not be fitted to all machines.
- The kohler engine controls this and will turn it on as required.
- When the grid heater is required the kohler engine will ground the F12 pin to allow the relay to be pulled in and allow power to the grid heater unit.
- The grid heater is also grounded to the engine body.

System Diagram

© 2025 Enter your company name

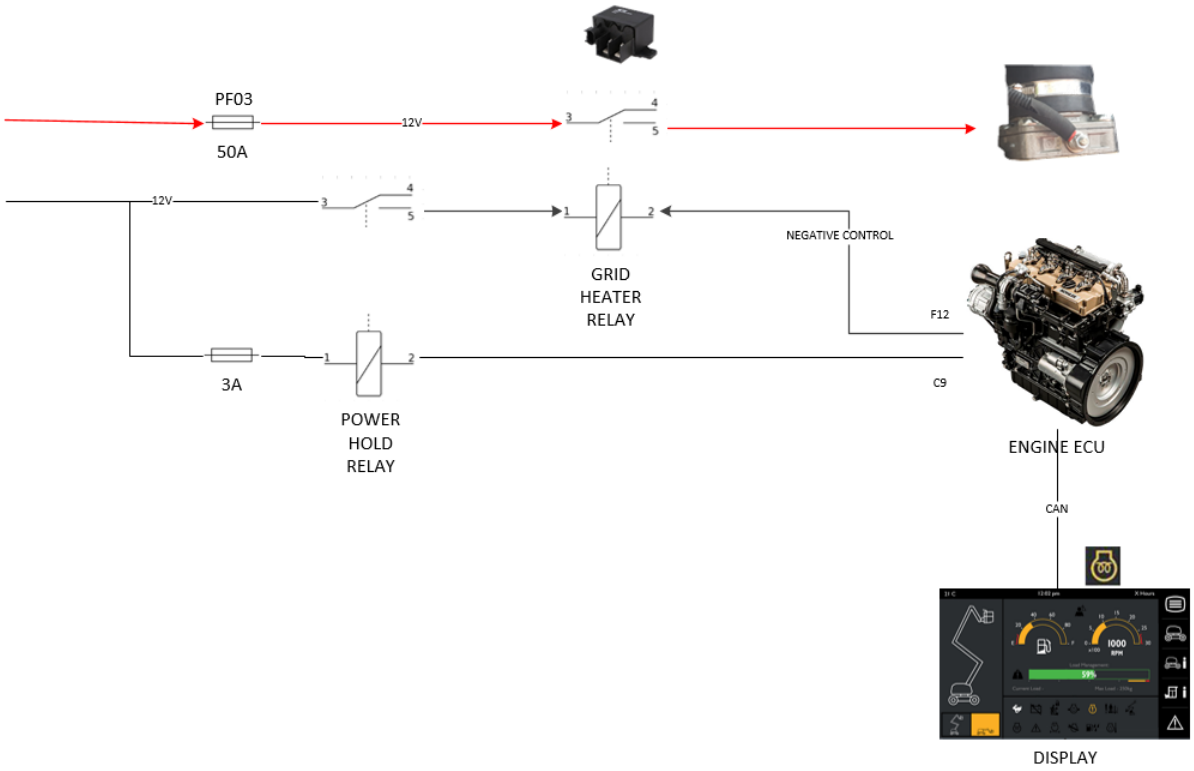

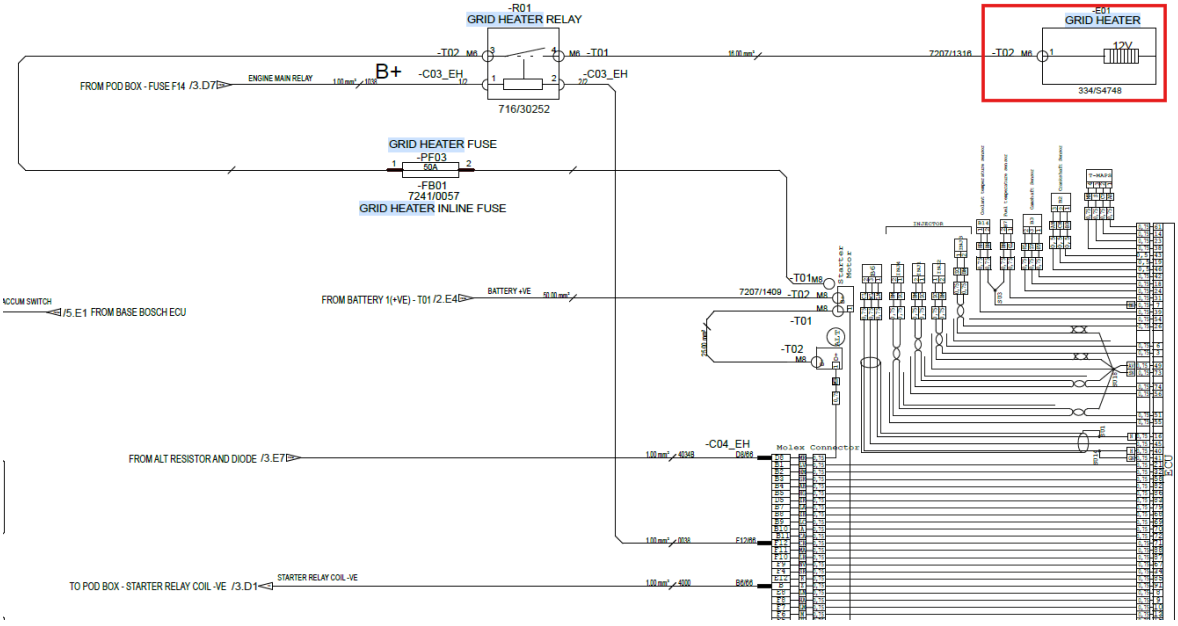

3.7 Engine Speed

Function

© 2025 Enter your company name

- The engine speed selection push button is only available at the platform control station.This is used to increase or decreased the engine RPM.
- At idle the machine will be set around 1000RPM .At low speed it will be 1500 RPM. At high speed it will be set to 2000RPM
- The isolator and ignition key should be in the 'ON' position. The engine should be started
- The foot pedal needs to be pressed while the engine speed button is pressed to make change in speeds.
- The LED will be active when the high speed is selected.

System Diagram

Below shows a machine overview for the engine speed selection

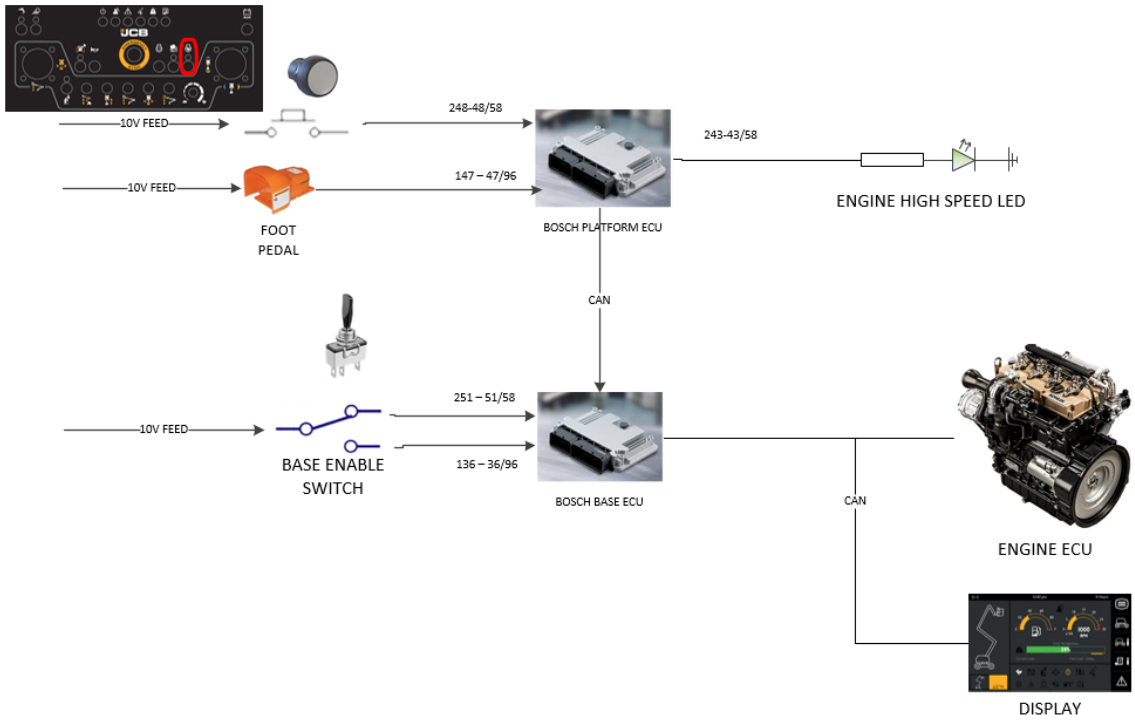

© 2025 Enter your company name

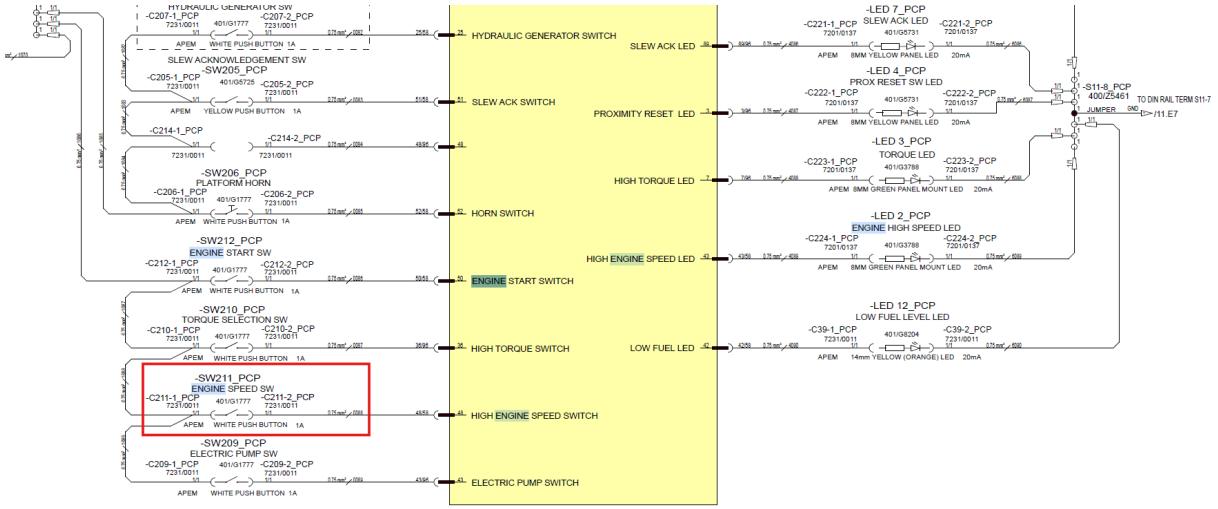

3.8 Engine Alternator

Function

- The engine alternator is used to charge the machine batteries up while the engine is running.

Signal

- From the pod box (FU11) a 12V signal goes to the alternator resistor and through a diode and feeds down to the alternator
- When the alternator is not turning this signal will go to ground and pull the current as least path of resistance.
- As the alternator spins up to speed by the engine the ground signal will turn to a voltage output, at this point the D+ relay will receive enough voltage to pull the relay in and allowing a signal to the Bosch ecu, Livelink and also allow the work lights to operate.
- If the engine is not running and this signal does not get through to Bosch ecu the alternator no charger will come on dash with no buzzer
- If the engine is running and this signal is not received then the ecu will flag an error as alternator is not charging and put a error code out as well as put the buzzer and warning light on the display and fault led at the platform.

System Diagram

© 2025 Enter your company name

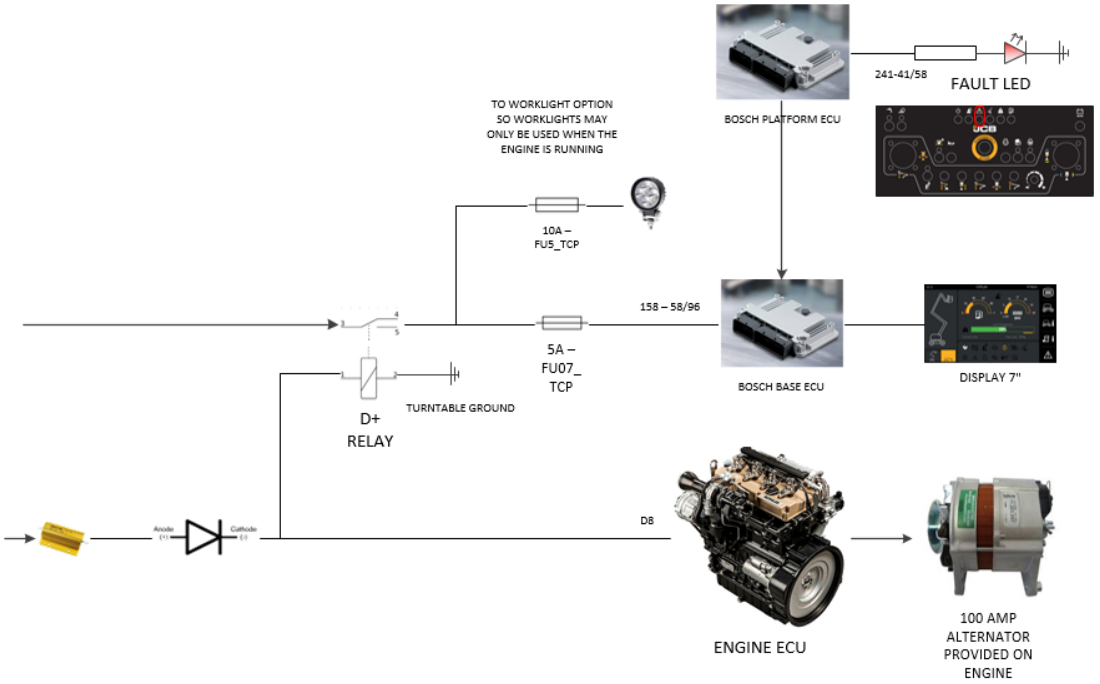

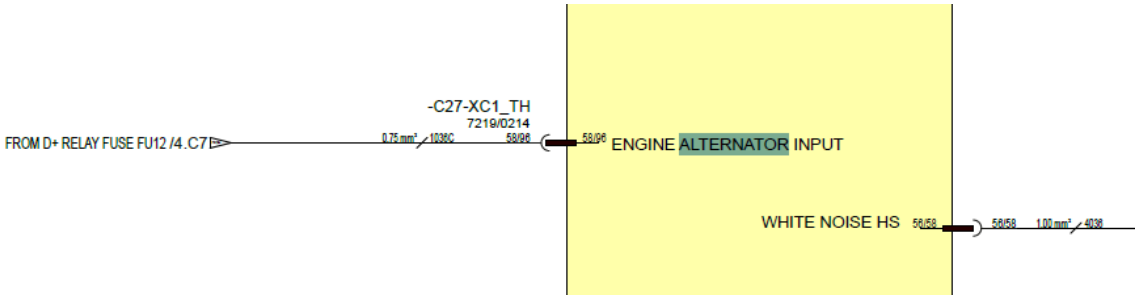

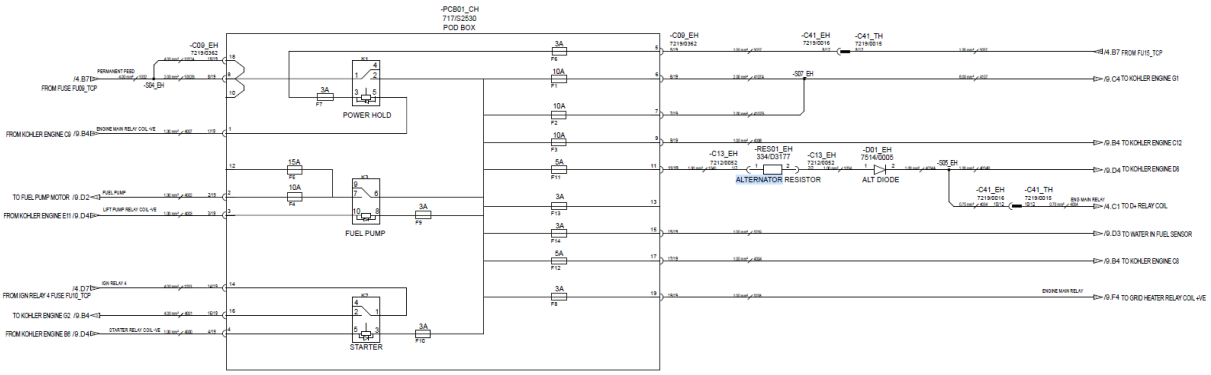

3.9 Air Filter Blocked

Function

© 2025 Enter your company name

The air filter blocked circuit is to ensure that the engine does not get run with a blocked filter causing damage to the engine.

System Diagram

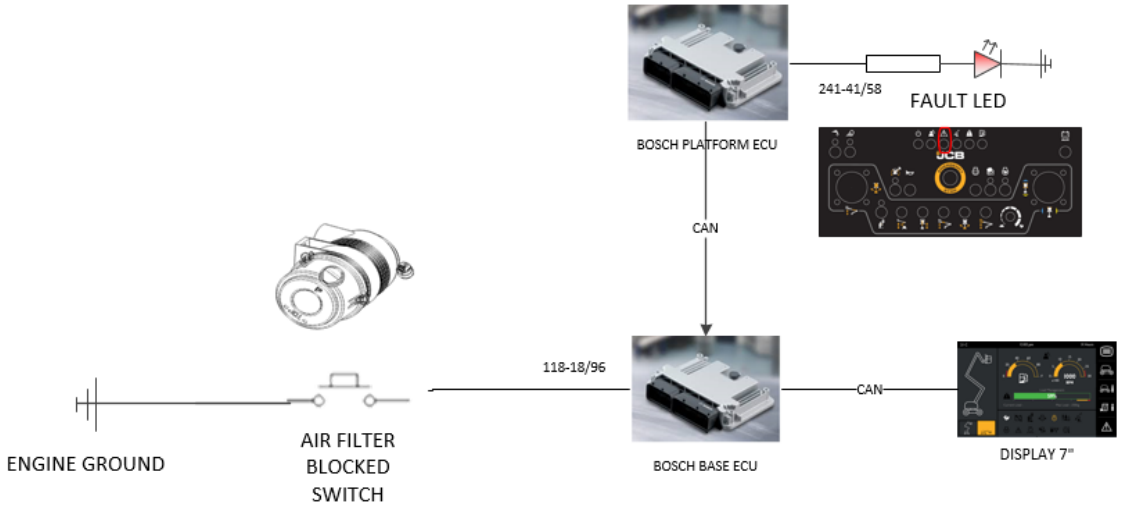

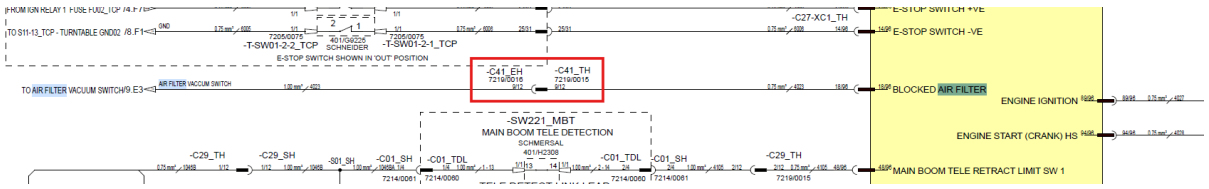

3.10 Crush Protection System

Function

- The crush protection system is to avoid an operator from being pressed into the platform control panel.
- The crush protection system is x2 NC switches.
- The system can only be engaged if the wire rope is fitted and torqued up correctly. Have no torque in rope is the same effect as the switch being pressed
- The system may need adjusting at times via the quick tension pulley.
- when the system is engaged correctly (not pressed):
- The full system should operate as normal
- When the system is disengaged (pressed)

© 2025 Enter your company name

- The system will stop all raise and extend controls
- The engine will return to idle
- The buzzer from both control stations will sound
- The xxx light at the platform will become active
- The crush protection icon will become active on the display
- Once the system has been pressed it will need to be reset via the pull level on the front of the switch.

System Diagram

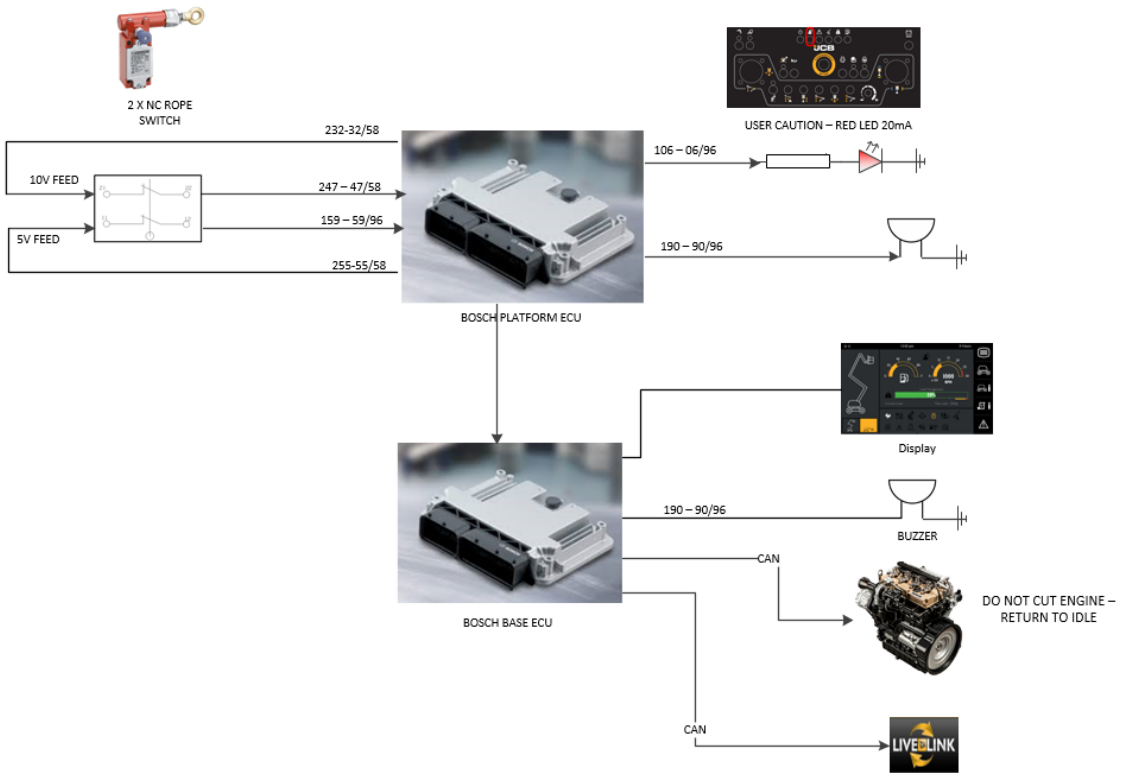

- The crush protection system is x2 NC switches.
- The system can only be engaged if the wire rope is fitted and torqued up correctly. Have no torque in rope is the same effect as the switch being pressed
- The system may need adjusting at times via the quick tension pulley.
- when the system is engaged correctly (not pressed):

© 2025 Enter your company name

- The full system should operate as normal
- When the system is disengaged (pressed)
- The system will stop all raise and extend controls
- The engine will return to idle
- The buzzer from both control stations will sound
- The xxx light at the platform will become active
- The crush protection icon will become active on the display
- Once the system has been pressed it will need to be reset via the pull level on the front of the switch.

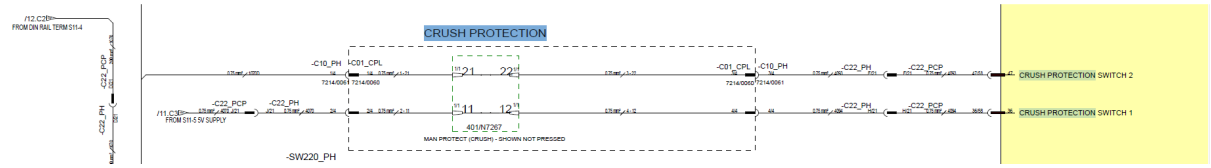

Location

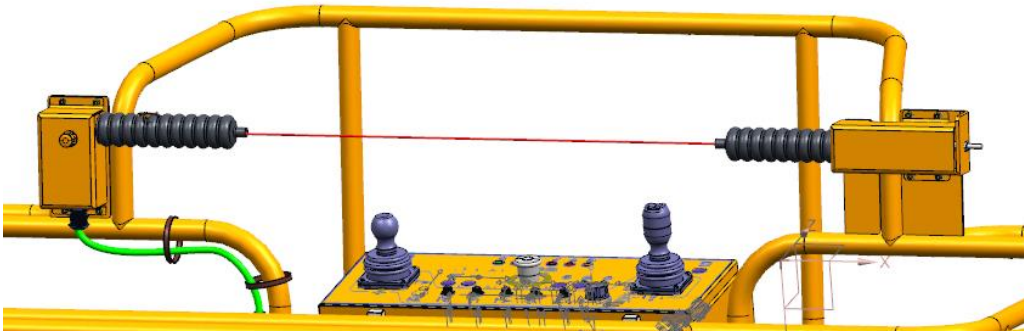

Wires and Connectors

Pin Number	Description	Wire Harness Number
11	5V Feed In	4085
12	Signal	4094
21	10V Feed In	1075TT
22	Signal	4093

© 2025 Enter your company name

Testing

Turn on the machine ignition

1.Press on the rope

2.Crush protection Icon should be shown on the display with buzzer

3.User Caution LED at the platform will light up with buzzer.

4.Pull the blue knob out on the switch to reset, Alarms/ icons should go off.

Related Fault Codes

Fault Code	Description
B1025-13	CRUSH Protection Switch 1 and 2 Plausibility Check
B1026-17	CRUSH Protection Switch 1 SC to >5V

3.11 High Torque

System Diagram

© 2025 Enter your company name

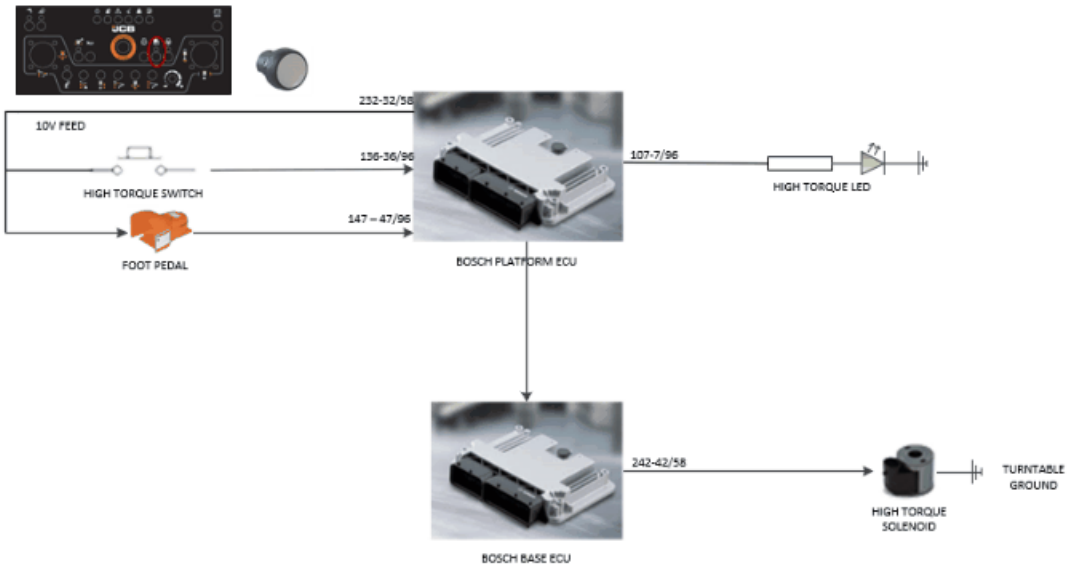

3.12 Steering

System Diagram

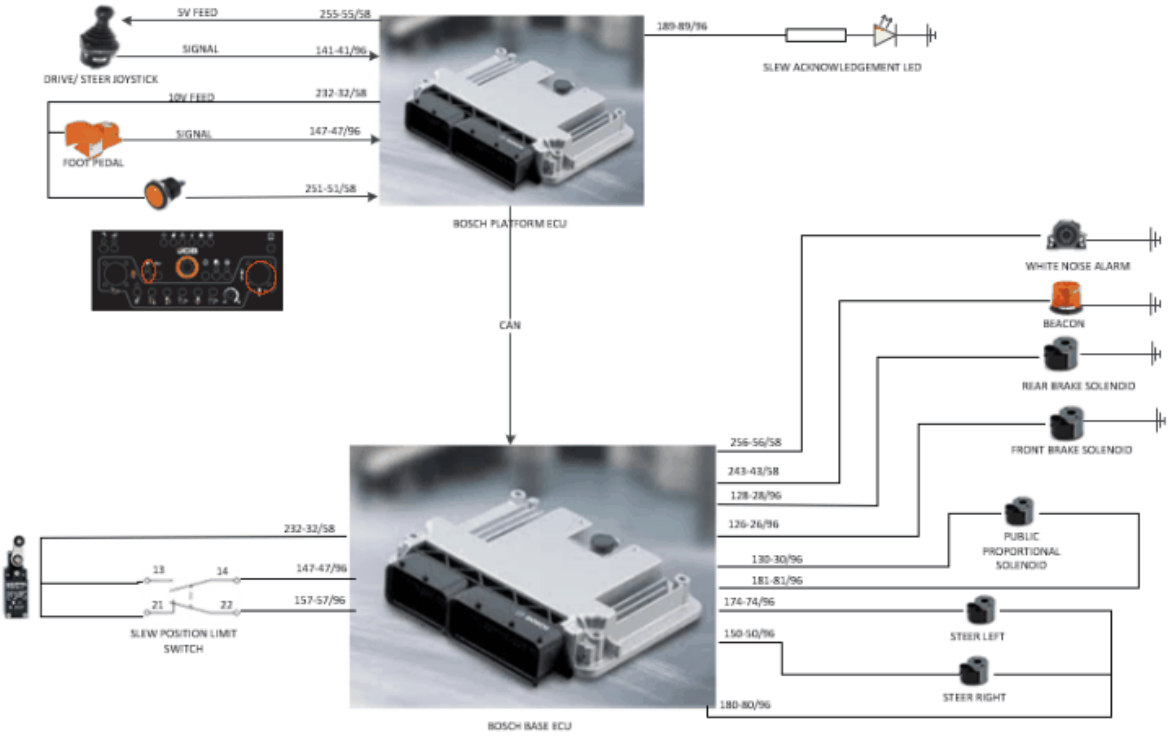

© 2025 Enter your company name

3.13 Slew

System Diagram

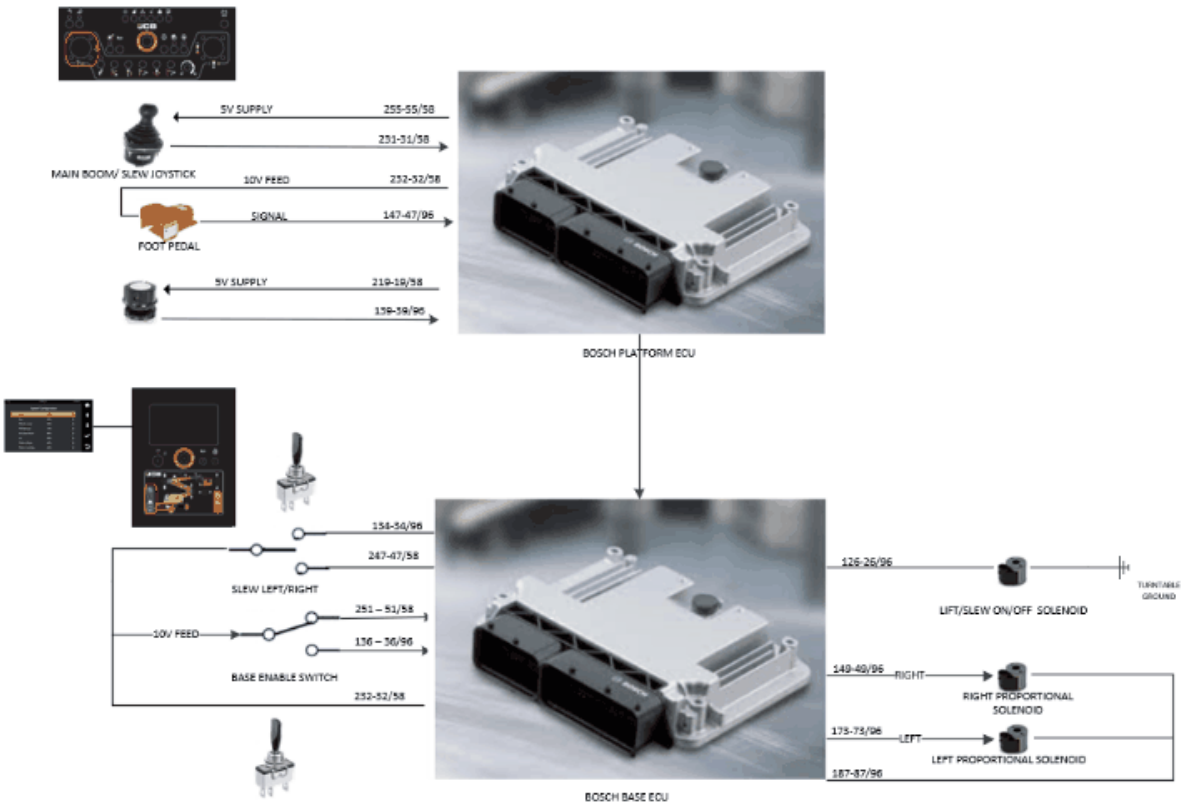

3.14 Limit Switch Position

System Diagram

© 2025 Enter your company name

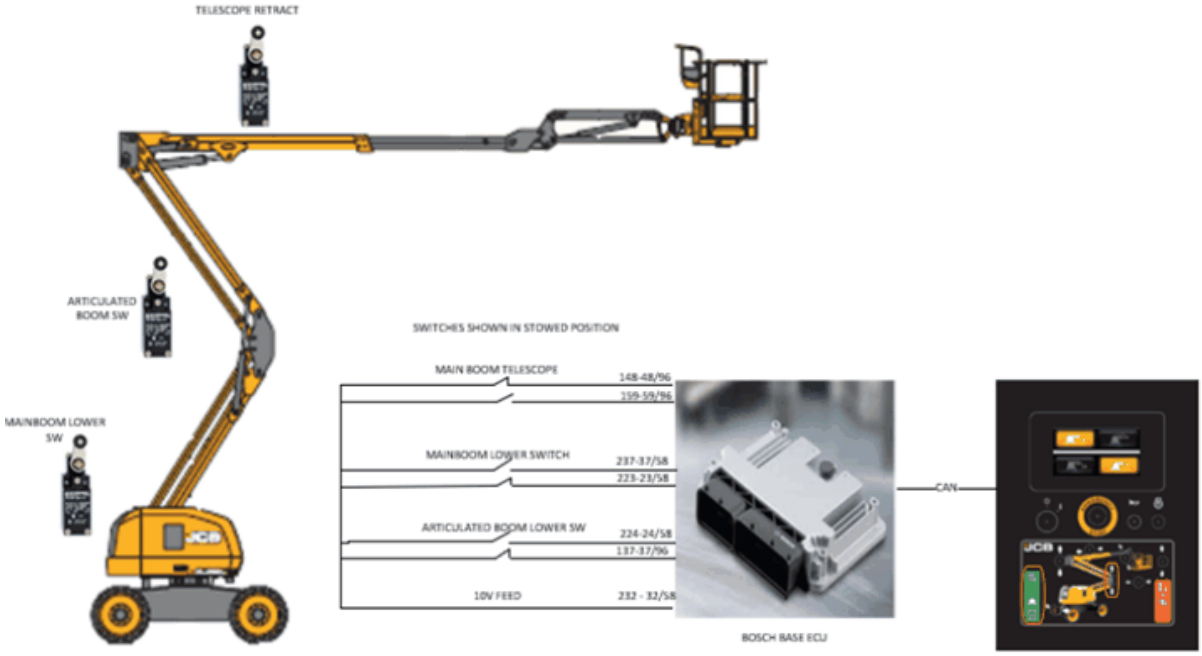

3.15 Platform Rotate

System Diagram

© 2025 Enter your company name

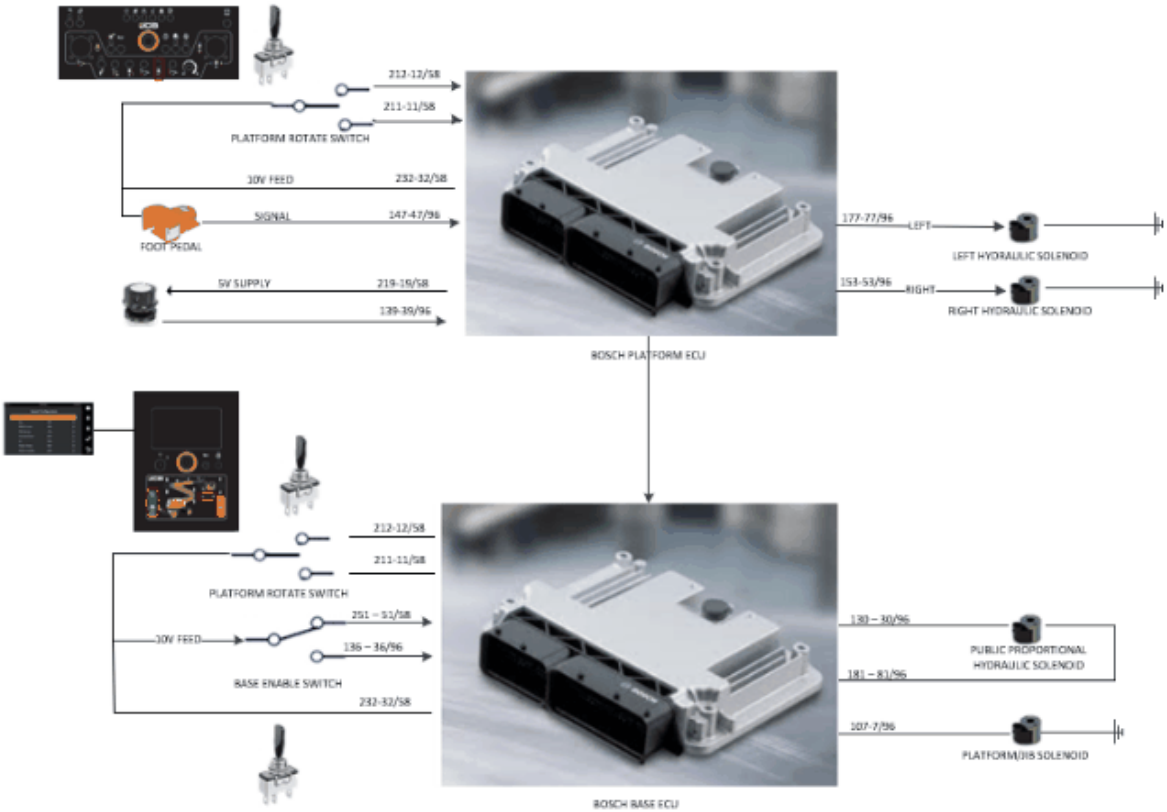

3.16 Overload

System Diagram

© 2025 Enter your company name

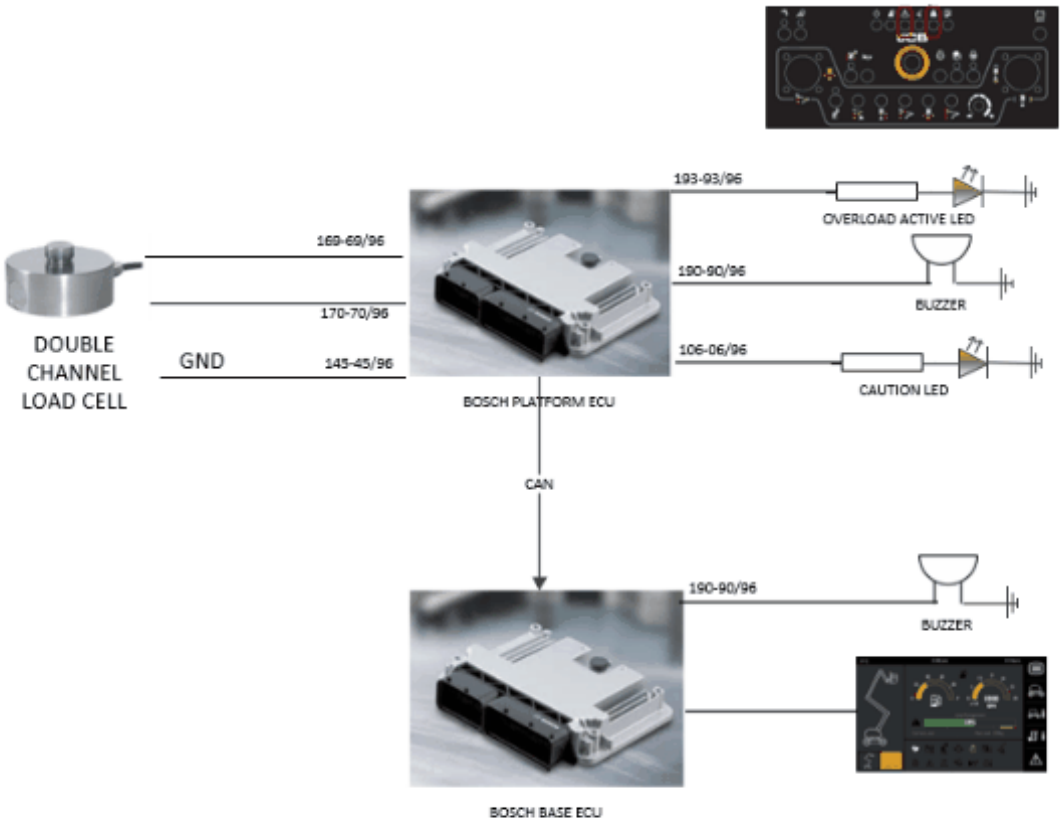

3.17 Main Boom

System Diagram

© 2025 Enter your company name

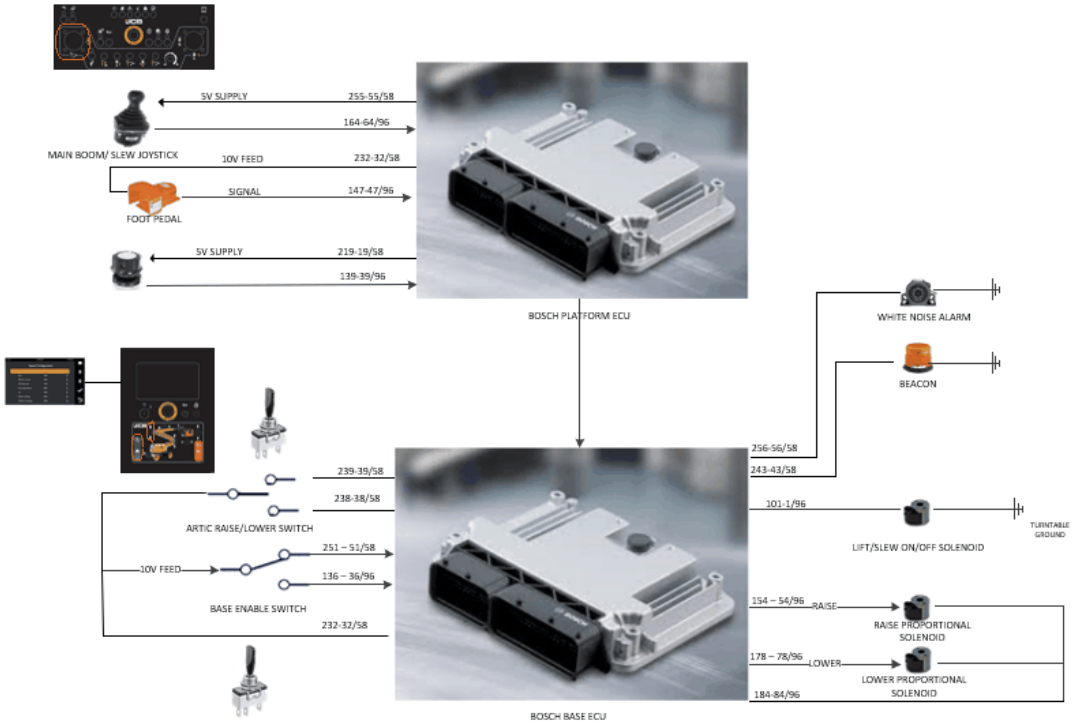

3.18 Leveling

System Diagram

© 2025 Enter your company name

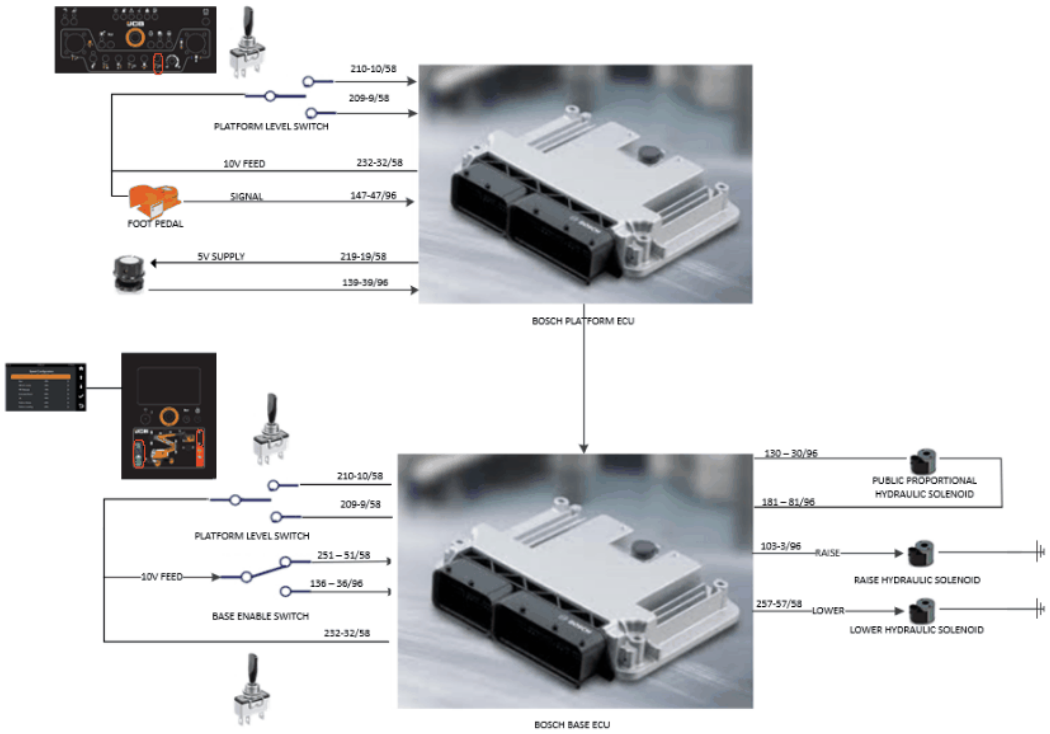

3.19 Jib

System Diagram

© 2025 Enter your company name

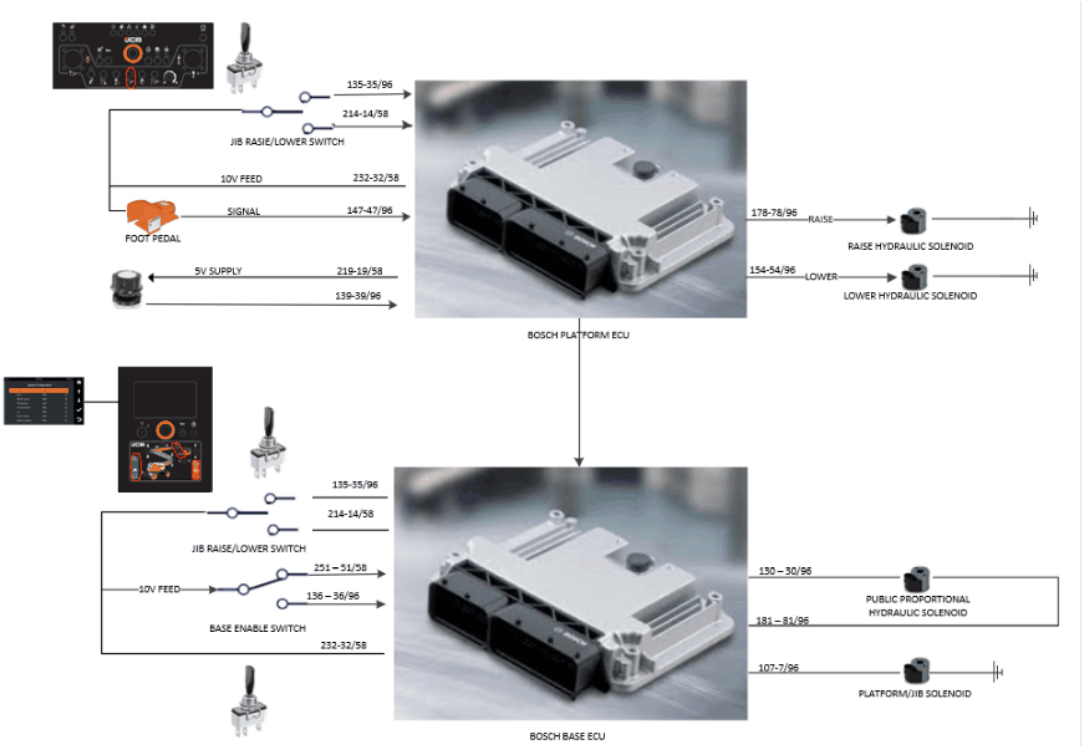

3.20 Tilt

System Diagram

© 2025 Enter your company name

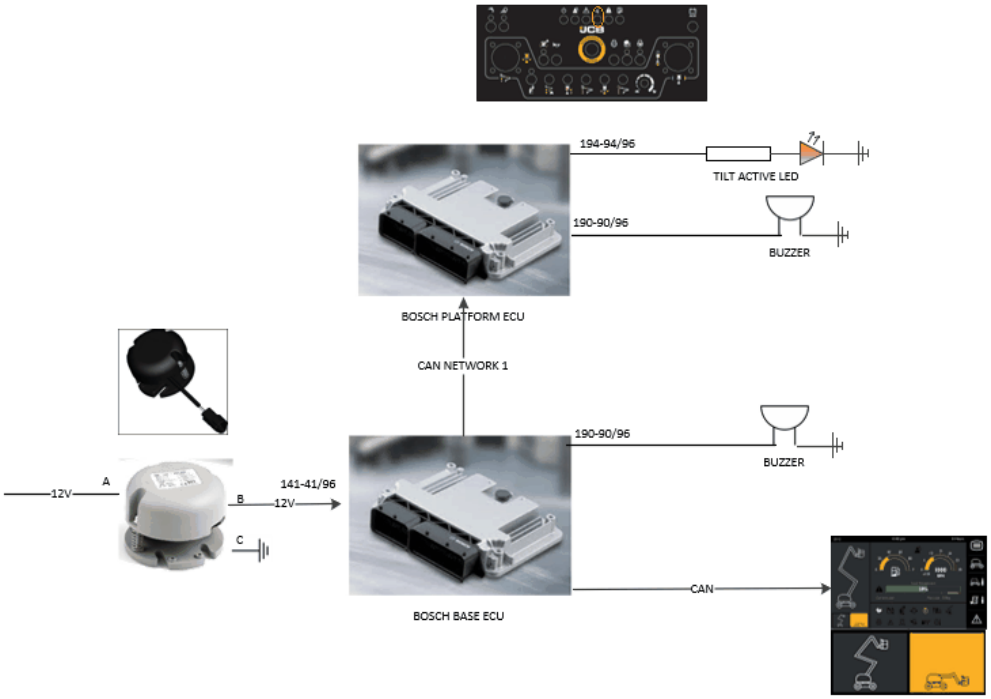

3.21 Telescope

System Diagram

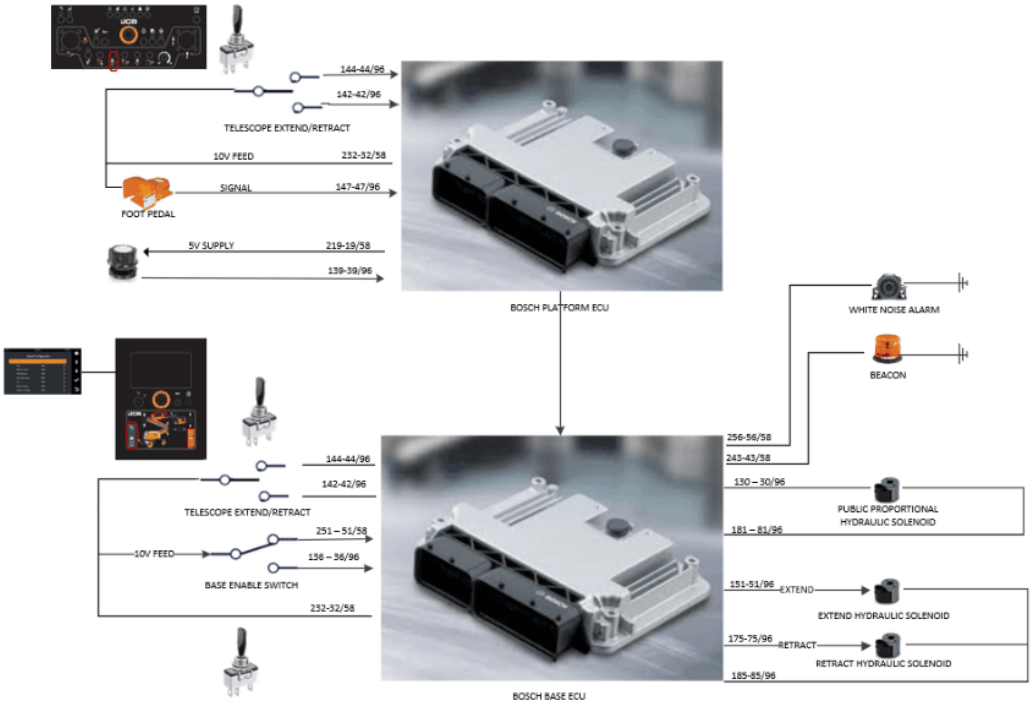

© 2025 Enter your company name

3.22 Articulate

System Diagram

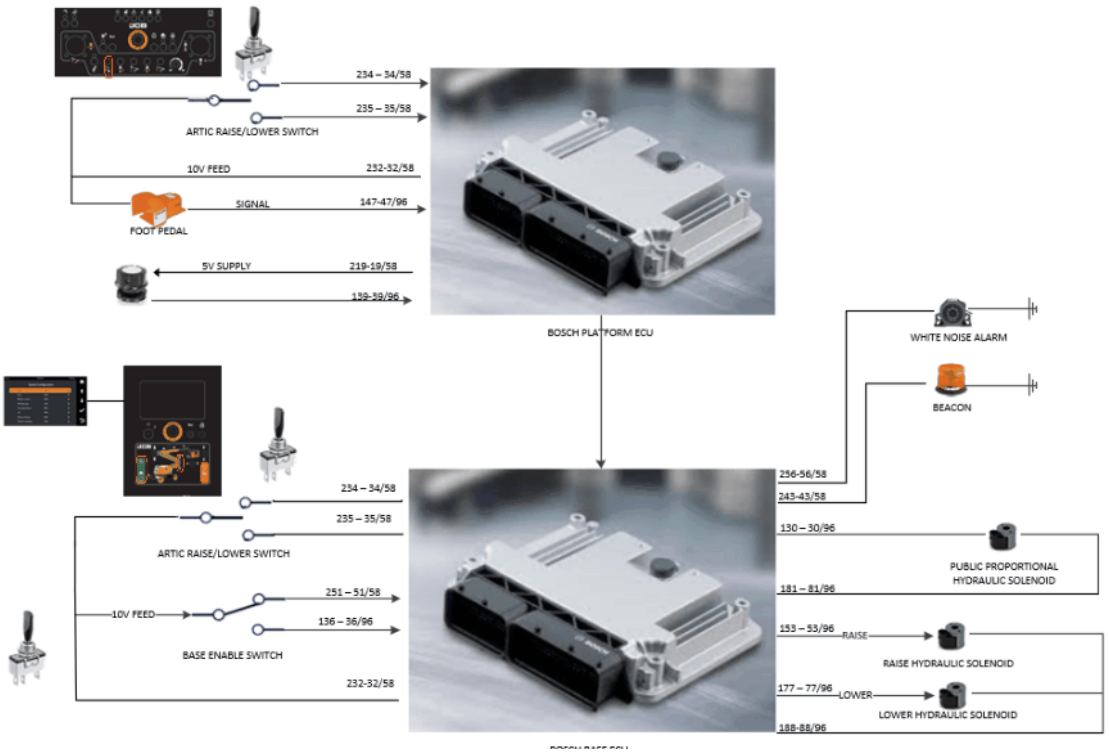

3.23 Generator

System Diagram

© 2025 Enter your company name

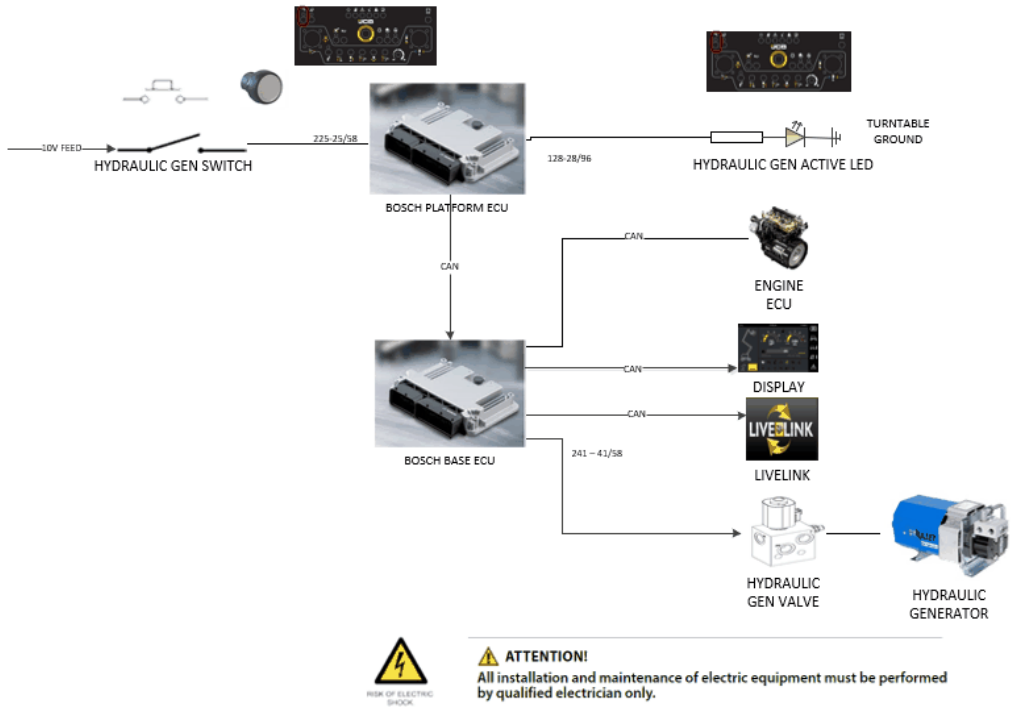

3.24 Fuel Level

System Diagram

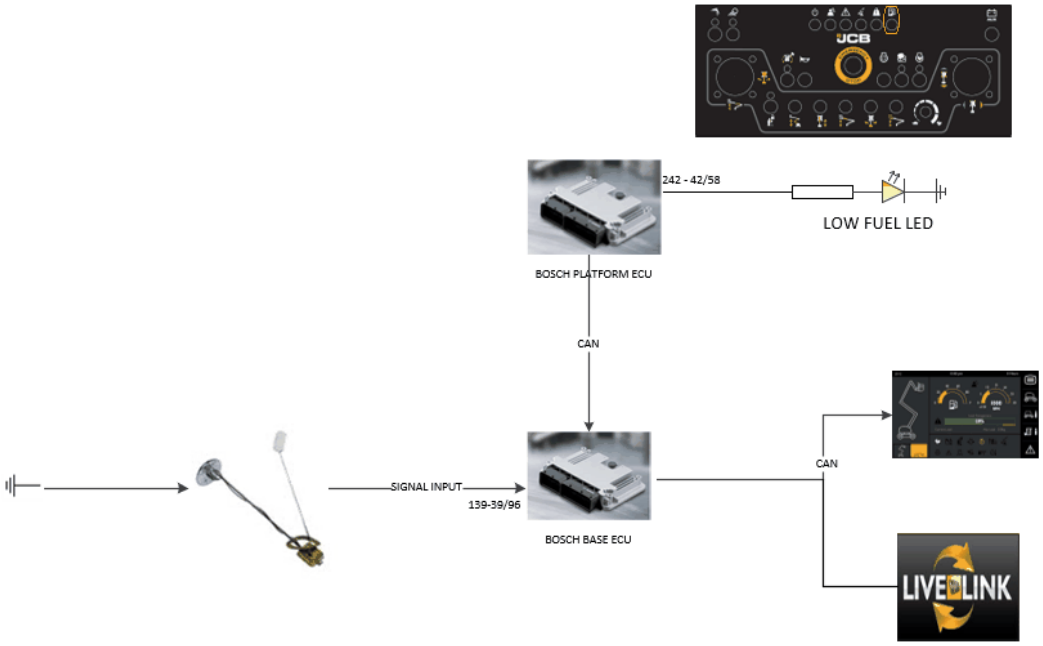

© 2025 Enter your company name

3.25 Oscillating Axle

System Diagram

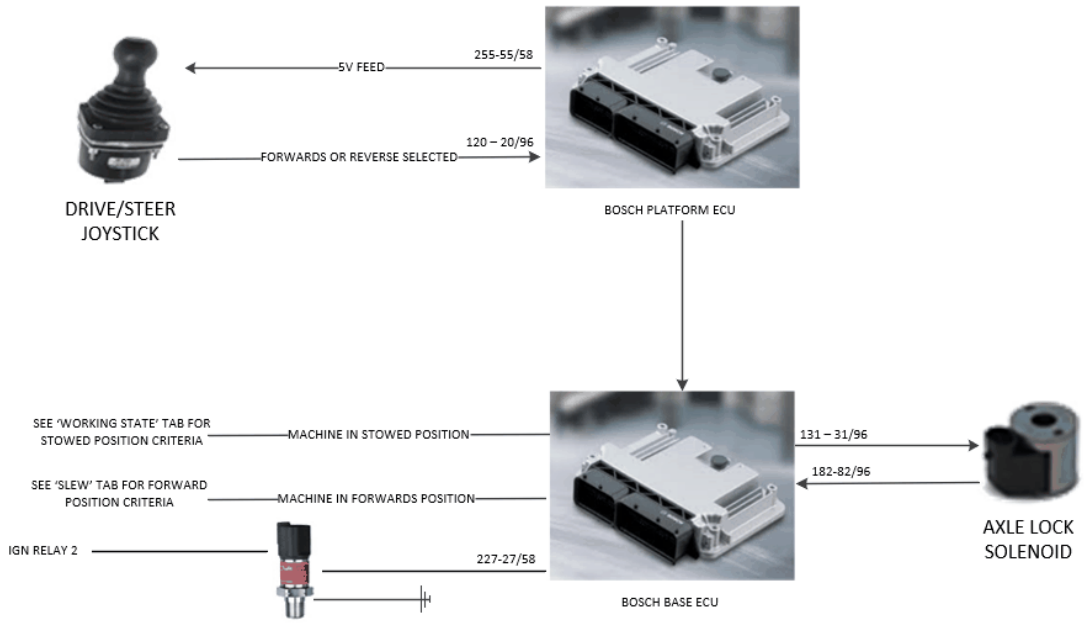

3.26 Override

System Diagram

© 2025 Enter your company name

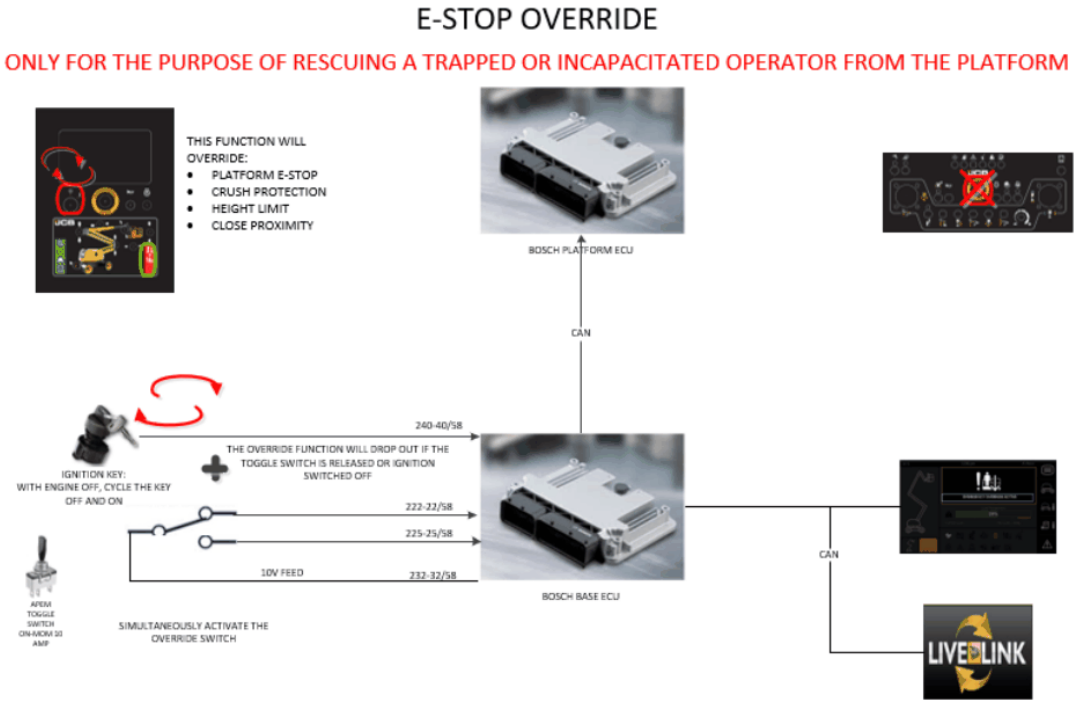

3.27 Drive

System Diagram

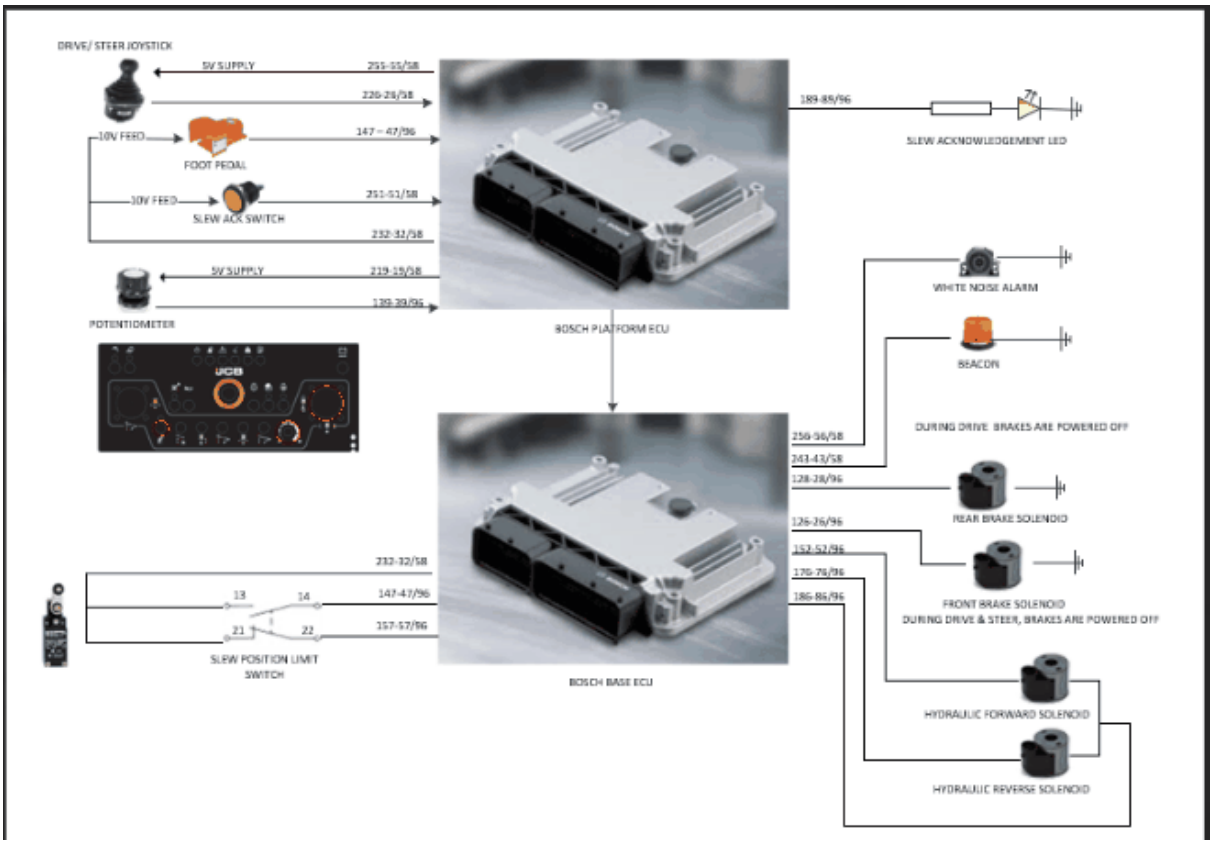

3.28 Display Functions

3.28.1 Setting Time

To Set the time in the display menu

1. Select Display settings
2. Select 'Time' using the arrows and tick button

© 2025 Enter your company name

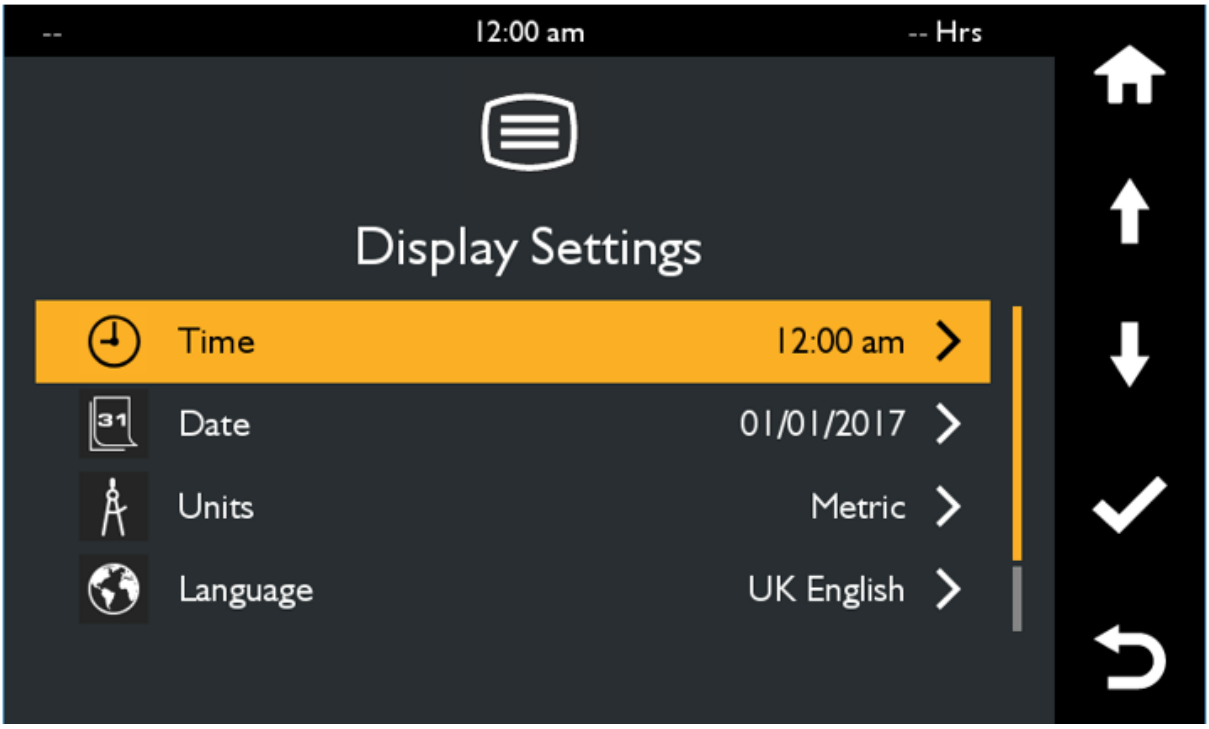

3.This screen allows the operator to select between 12/24Hr clock and also to set the time.

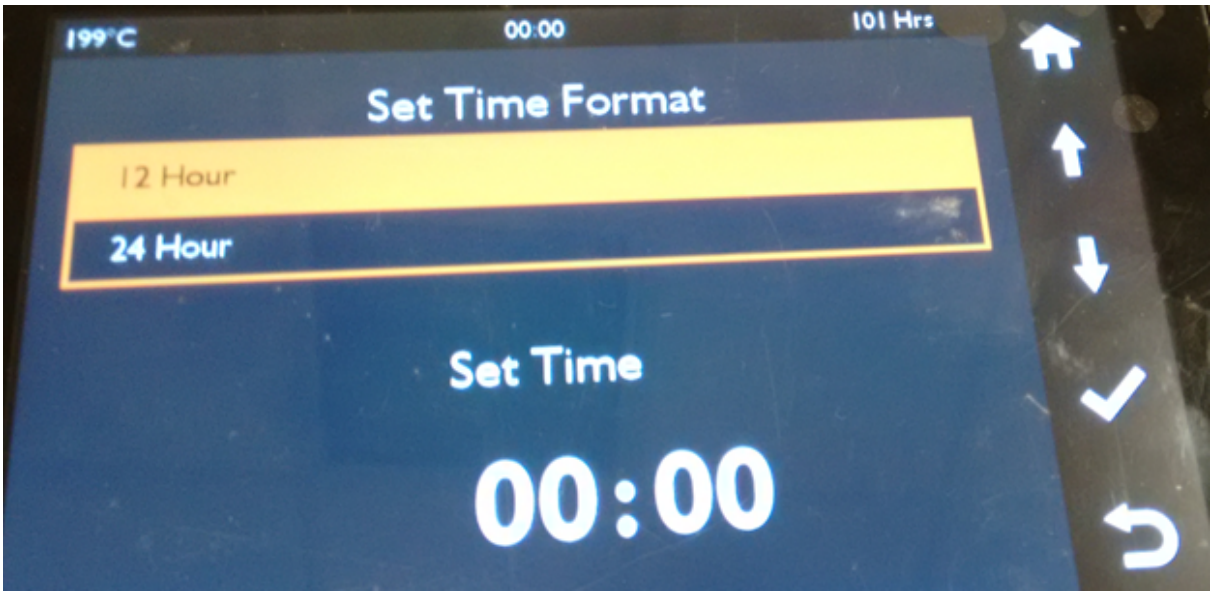

Use the arrow keys to select up and down and the tick button to set.

3.28.2 Setting Date

To Set Date in the display menu

© 2025 Enter your company name

1. Select display settings.

2. Select 'Date' from the menu using the arrow keys and the tick to select.

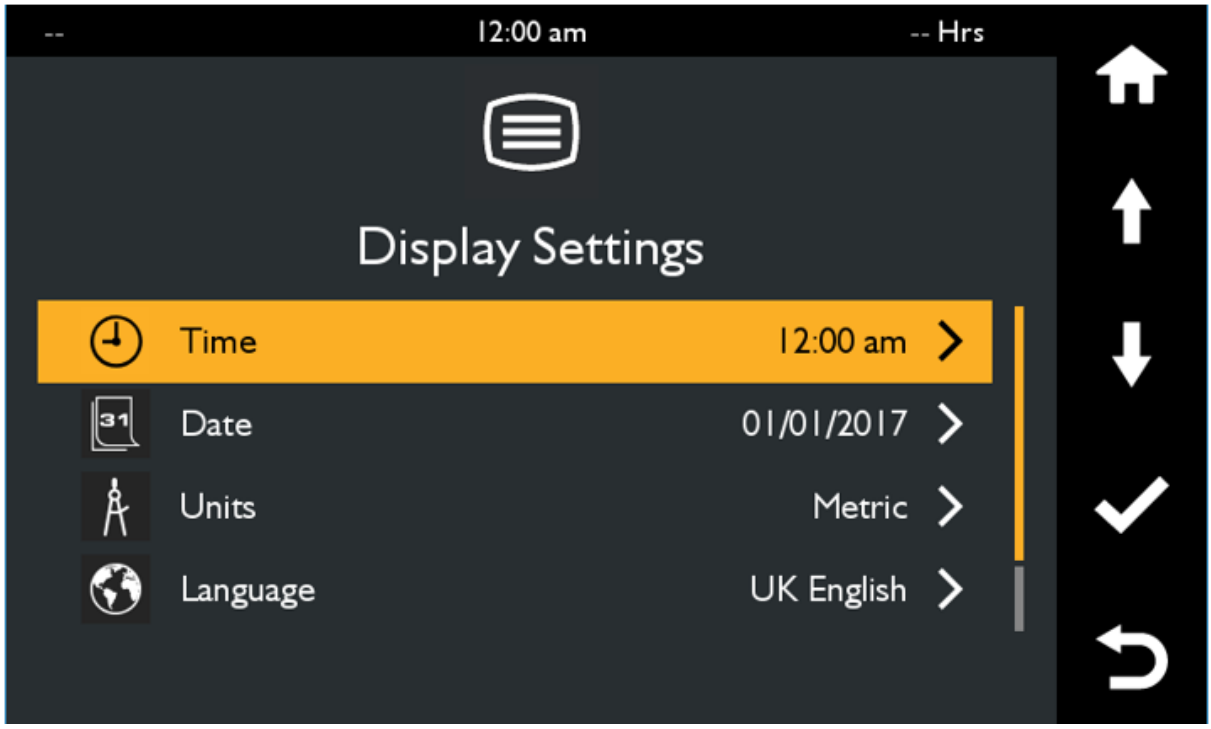

3. This screen allows to set the format and date to the machine.

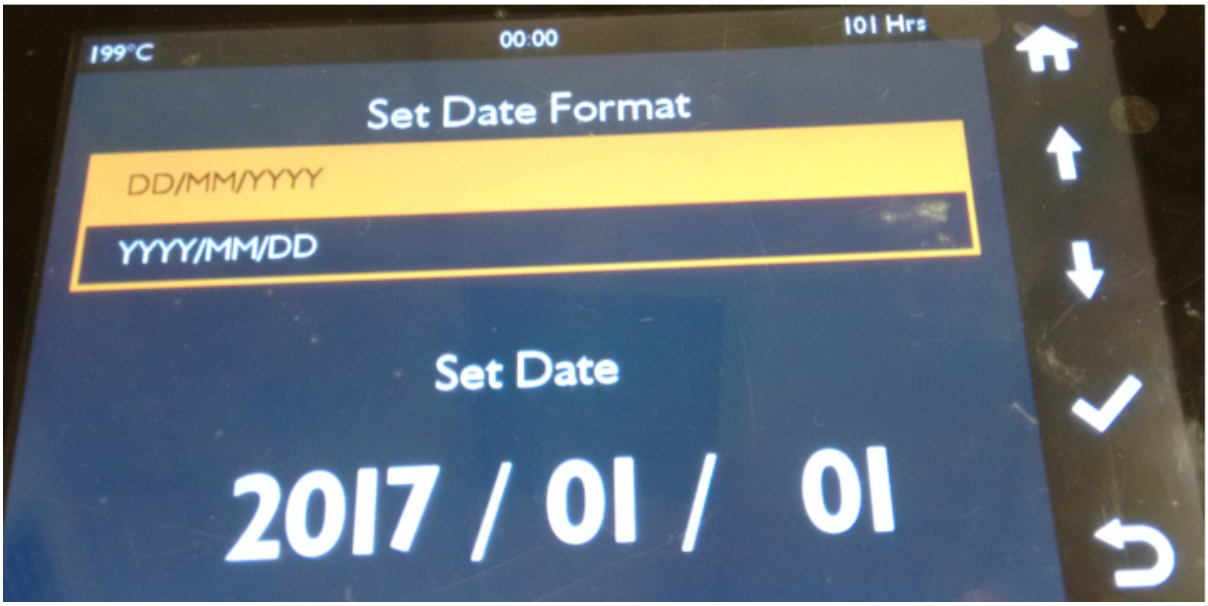

Using the arrows keys to navigate up and down the the tick button to select.

© 2025 Enter your company name

3.28.3 Setting Units

Setting units in the display menu

1. Select Display settings

2. Select 'Units' using the arrows and tick button

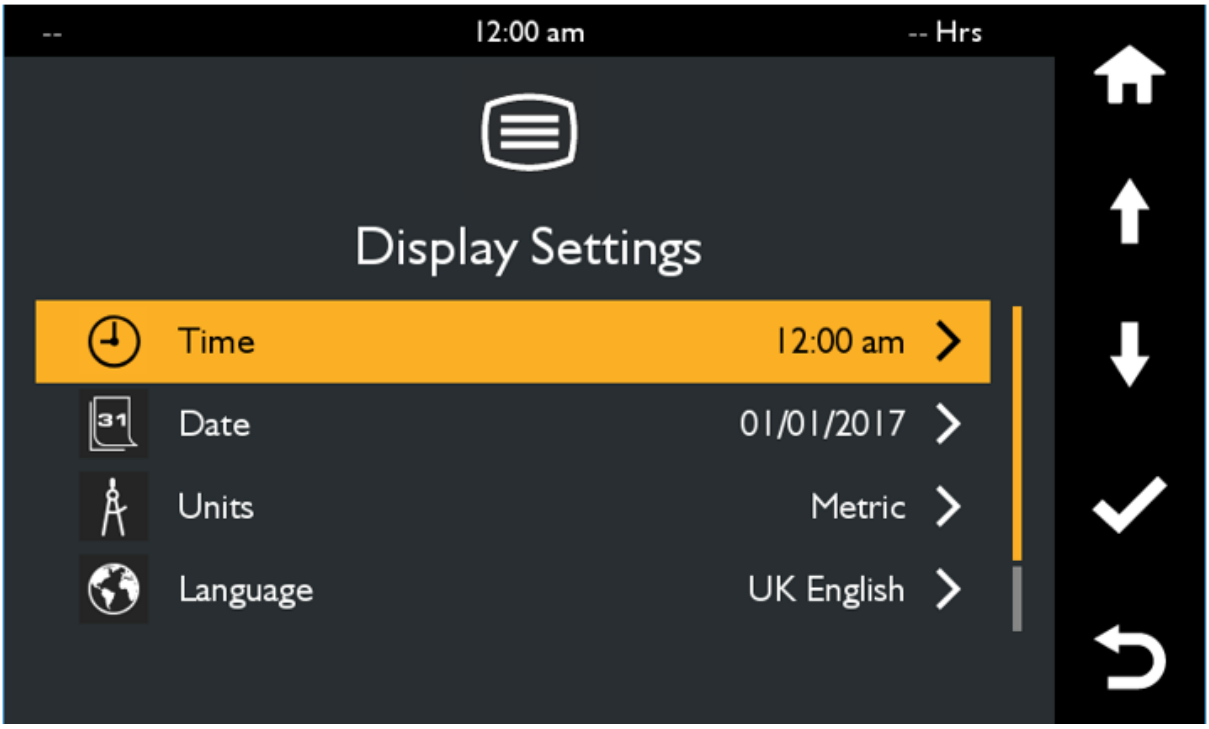

3. Using the arrow keys the operator can select between 'Metric' and 'Imperial'

3.28.4 Setting Brightness

To Set the 'Brightness' in the display menu

1. Select Display settings

2. Select 'Brightness' using the arrows to scroll down and tick to select

© 2025 Enter your company name

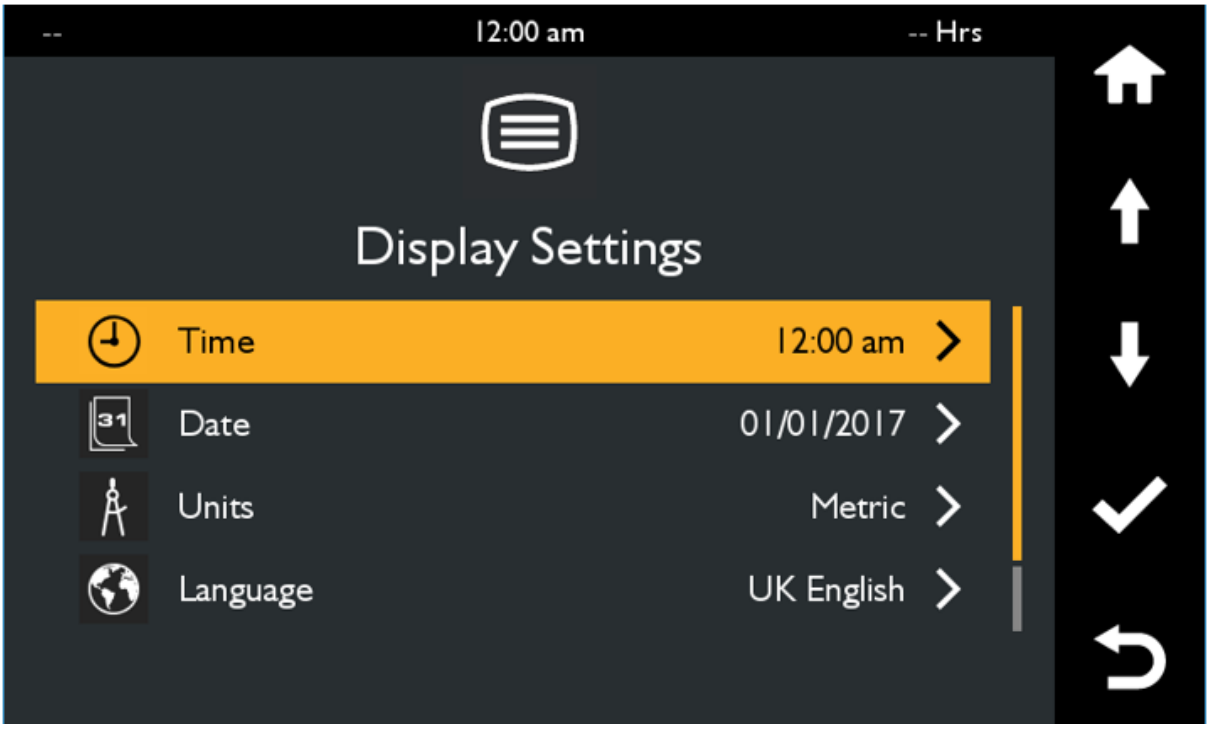

3. Use the arrow keys to select required brightness.



4. Use the tick to confirm selection.

3.28.5 Speed Configuration

To Set the configure speeds in the display menu

© 2025 Enter your company name

This allows an operator to adjust machine speeds per function. The machine will be set at 100% as it leaves the factory but may be slowed down for new operators or un-familiar operators or even block a function off. For example if you didnt want to allow slew this function could be set to 0%

1. Select 'machine settings'

2. Select 'Speed configuration' using the arrows and tick button

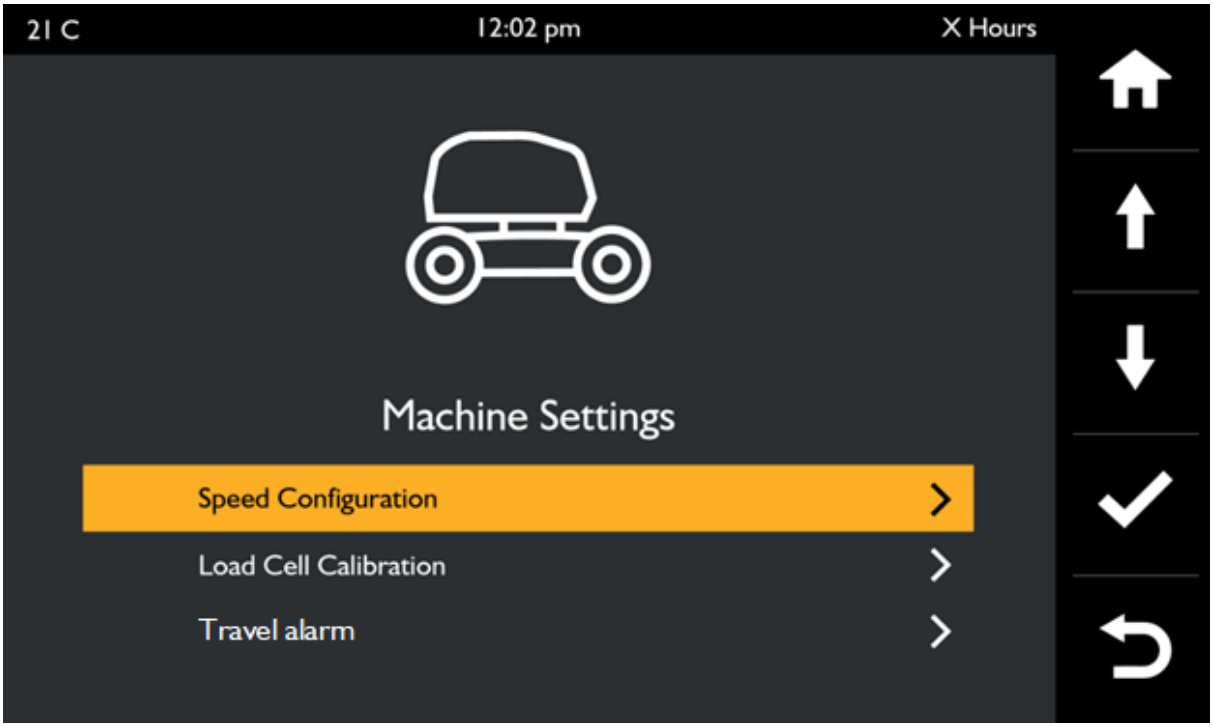

3. Using the arrow buttons then select the desired function and use the tick to select

© 2025 Enter your company name

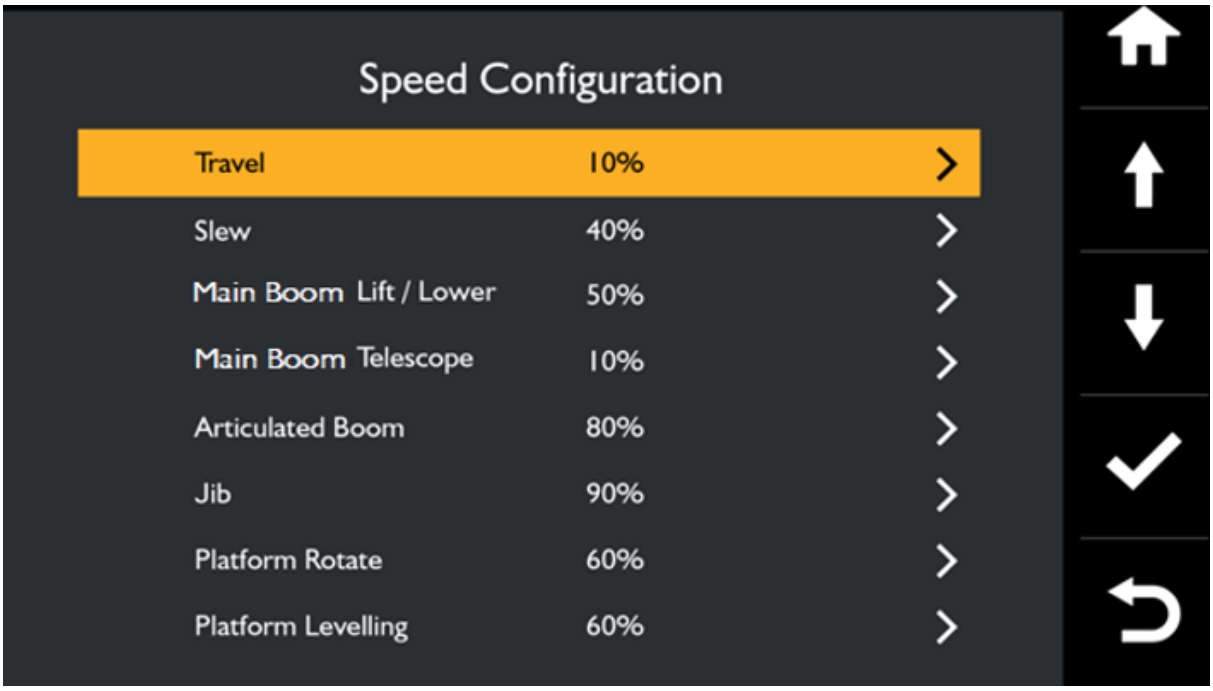

4. Use the up and down arrows to adjust the % speed allowed

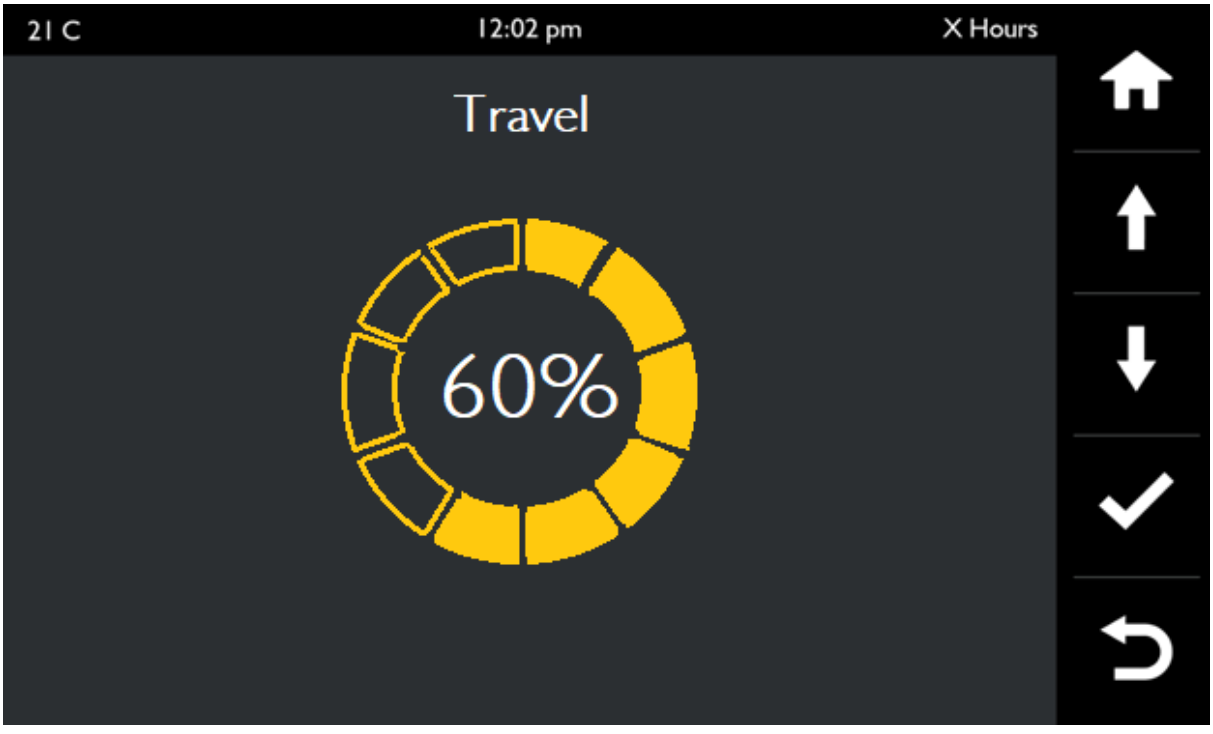

5. Use the tick around to confirm

© 2025 Enter your company name

3.28.6 Setting Travel Alarm

1. Go to machine settings in the display

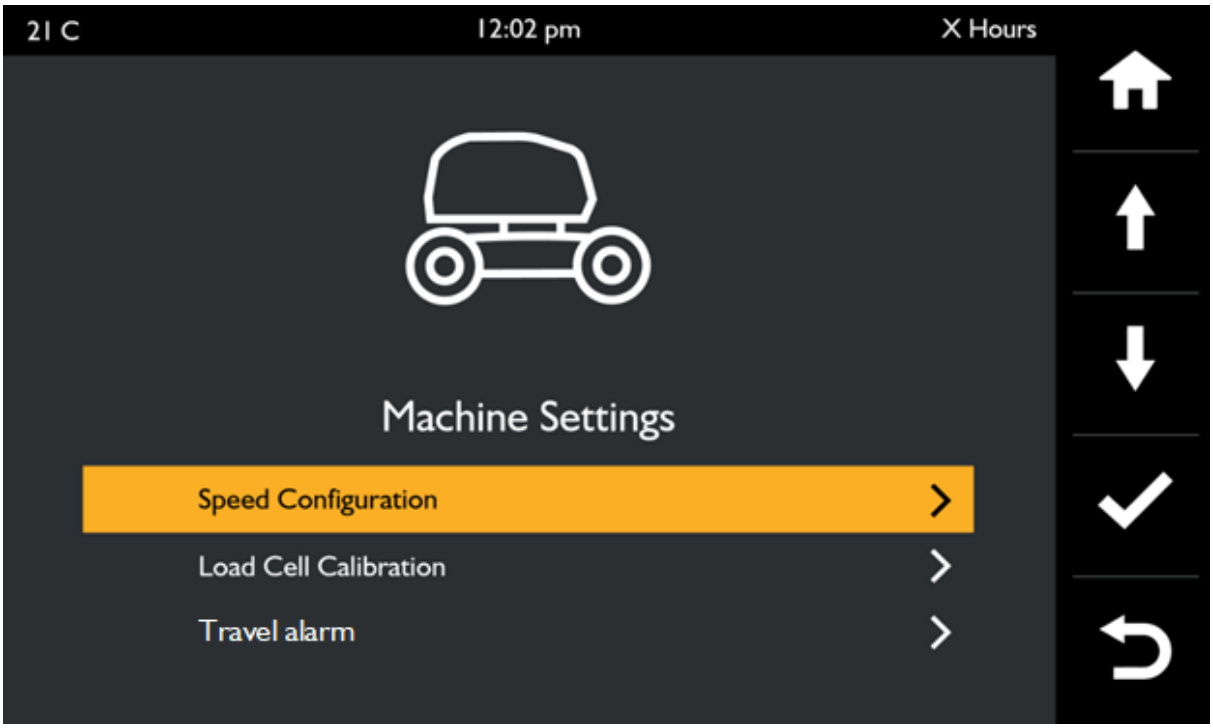

2. Using the arrow keys select travel alarm and use the tick button to confirm

3. The right hand side shows current status, to change use the tick button

© 2025 Enter your company name

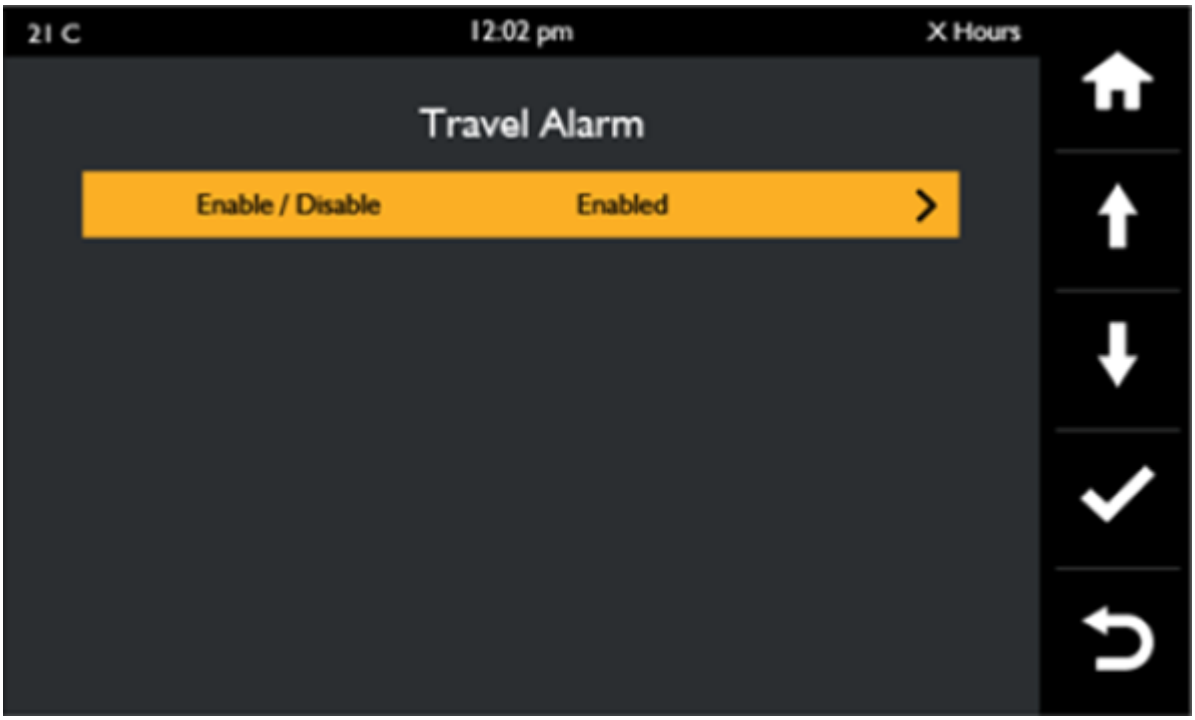

4. Use the arrows keys to select required state and tick to select

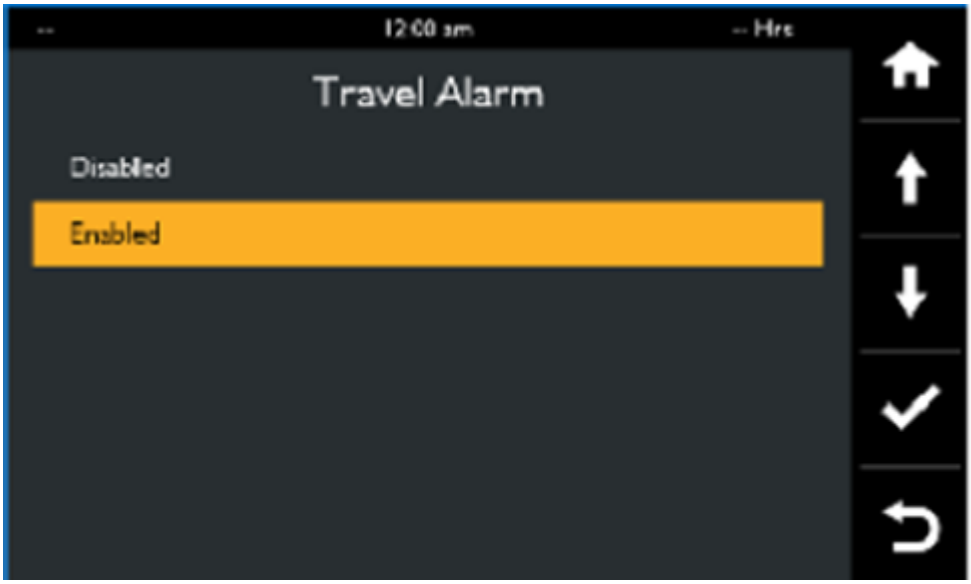

3.28.7 Setting Language

To Set the 'Language' in the display menu

1. Select Display settings

2. Select 'Language' using the arrows and tick button

© 2025 Enter your company name

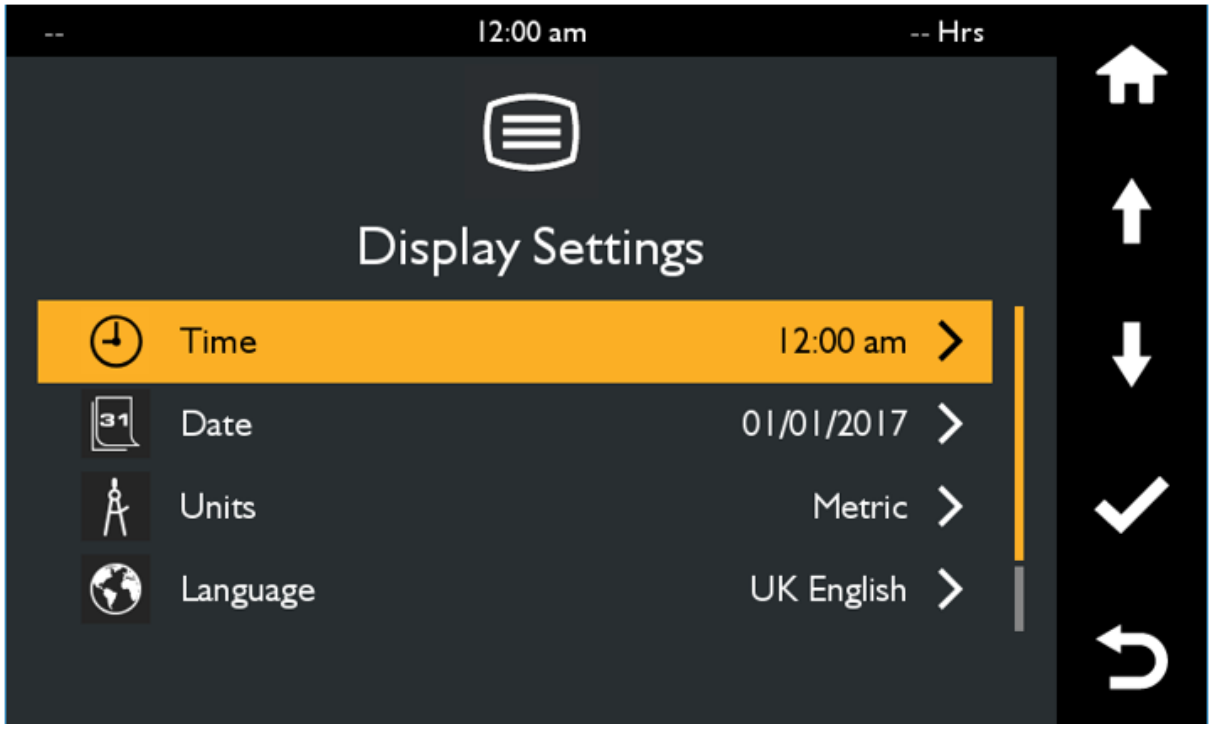

3. Using the arrow keys select the correct language from the drop down menu

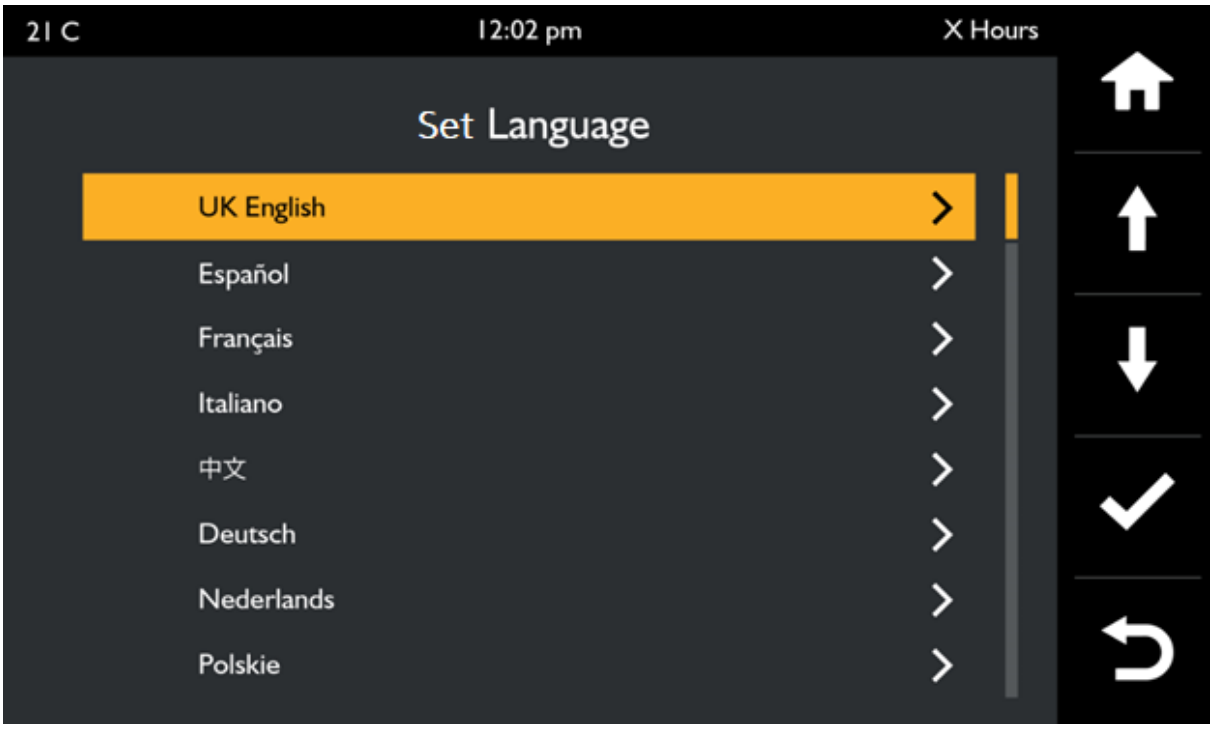

4. Use the tick button to confirm language selection

© 2025 Enter your company name

3.28.8 Setting Load Cell Calibration

Load cell Calibration

1. Select 'machine settings on the display screen

2. Select load cell calibration and use the tick to confirm

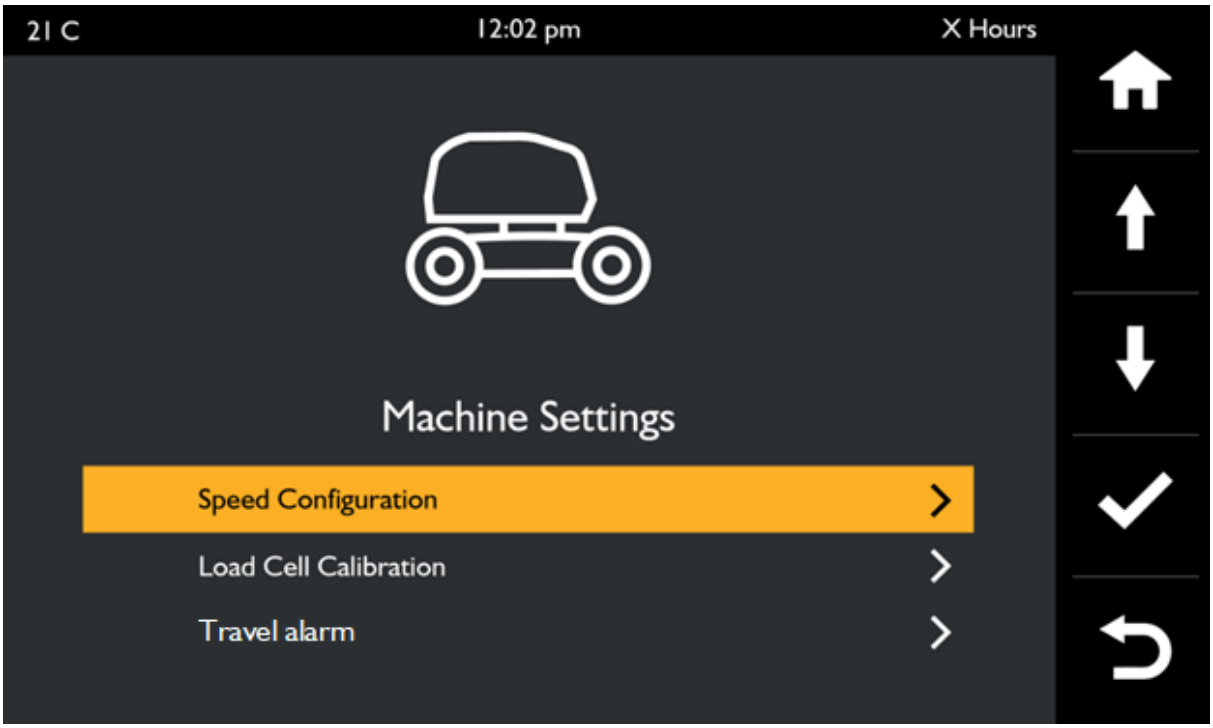

3. Use the arrow keys and select the 'NO load' or 'Rated load' depending on the calibration to be carried out.

Ensure their is nothing in the platform when the 'NO load' is selected

Ensure 250Kg is in the platform to set the 'rated load'

4. When the machine has the correct loading, use the tick arrow to confirm setting.

© 2025 Enter your company name

This page is intentionally left blank.
Remove this text from the manual
template if you want it completely blank.

Components

4 Components

Components



4.1 PF01 Electric Pump

Component:	Fuse Electric Pump
Function:	The primary function of fuse is to keep the high voltage supply away from electric pump. It will brake the circuit in case of too much current flow & any fault in component.

© 2025 Enter your company name

Location:	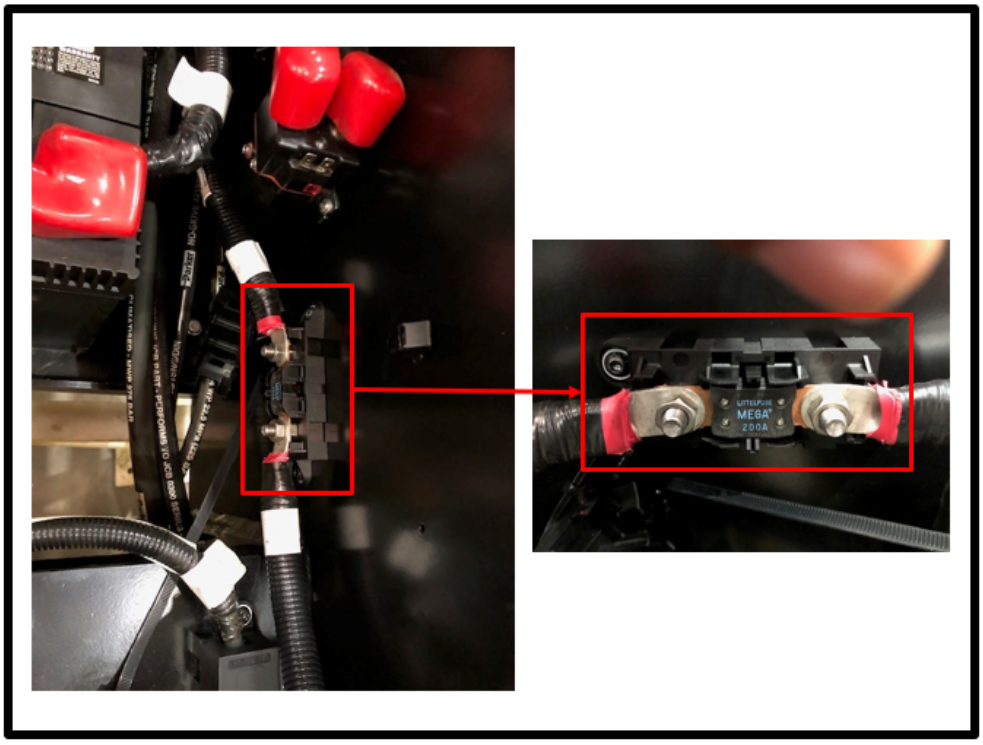
Location Image:	Inside the Chassis RHS, near battery.
Signal:	200 Amp
Wires & Connectors:	
Internal Electrical Schematic:	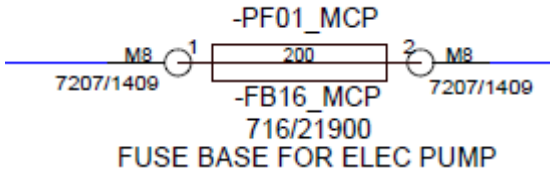
Testing:	Use the multi-meter on the harness connector pins. DO NOT USE the meter on the ECU pins. 1.Using a multimeter, check the continuity between the two pins on the Fuse. value should be 0 Ω 2.If there is no continuity then replace the Fuse
Expected Values:	

© 2025 Enter your company name

Related Fault Codes:	

4.2 PF02 Control System Primary

Component :	Fuse Control System Primary
Function:	Control system primary fuse is used for protection to control panel. This Fuse is the main control system primary fuse
Location:	On Chassis
Location Image:	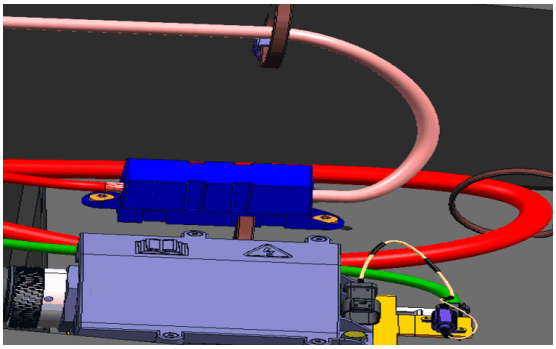
Signal:	**Pin Number** / **Description** Positive / 16sqmm cable Positive / 16sqmm cable
Wires & Connectors:	Shows the machine harness Side

© 2025 Enter your company name

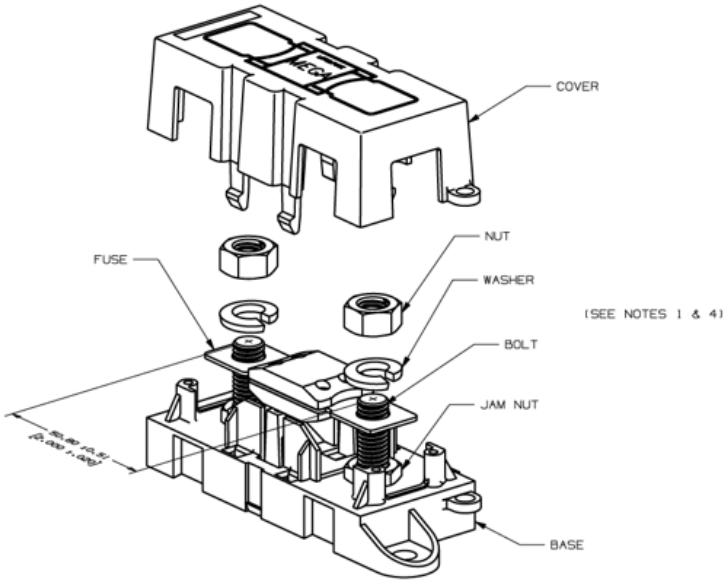

Item	Torque Value
Fuse holder bolt tightened with chassis	5 Nm
Fuse bolt tightened with fuse holder bolt	8-14 Nm

Internal Electrical Schematic:

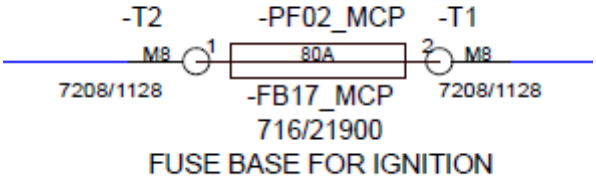

Testing:

Important: Use the multi-meter on the harness connector pins. DO NOT use the meter on the ECU pins

1.Using a multimeter, check the continuity between the two pins on the Fuse. value should be 0 Ω

2.If there is no continuity then replace the Fuse

Expected Values:

Related Fault

© 2025 Enter your company name

Codes:	

4.3 PF03 Grid Heater

Component :	Fuse Grid Heater
Function:	Grid heater fuse is used to protect the Grid heater..
Location:	On Engine Tray
Location Image:	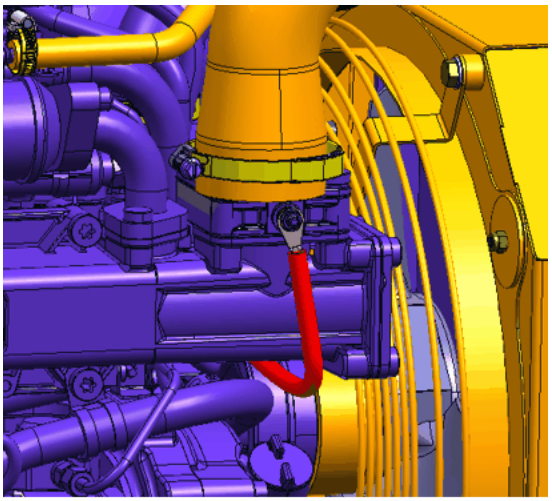
Signal:	<table><tr><td>Pin Number</td><td>Description</td></tr><tr><td>Positive</td><td>16sqmm cable</td></tr><tr><td>Positive</td><td>16sqmm cable</td></tr></table>
Wires & Connectors:	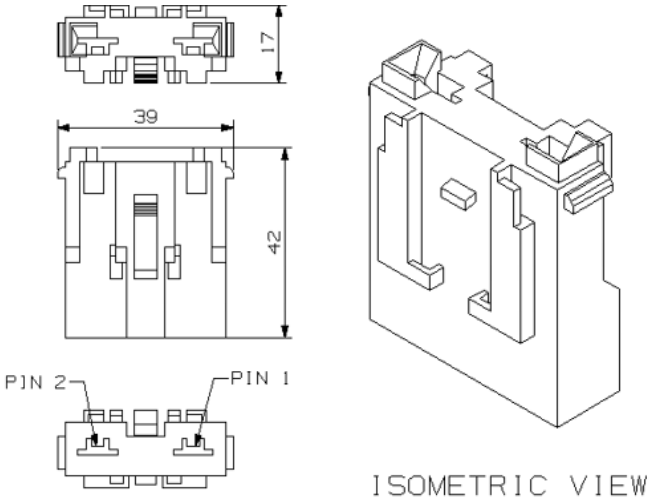

© 2025 Enter your company name

Internal Electrical Schematic:	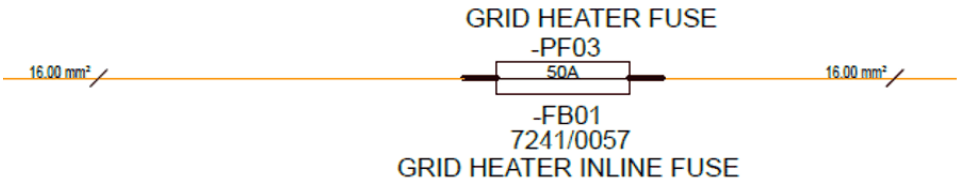
Testing:	Important: Use the multi-meter on the harness connector pins. DO NOT use the meter on the ECU pins 1.Using a multimeter, check the continuity between the two pins on the Fuse.value should be 0 Ω 2.If there is no continuity then replace the Fuse
Expected Values:	
Related Fault Codes:	

4.4 Water In Fuel Sensor (WIF)

Component :	Water In Fuel Sensor (WIF)
Function:	• The water in fuel sensor is to ensure the quality of fuel is sufficient for the kohler engine. • The bowl may require draining when the sensor is triggered .It also detects the water content in the fuel before it goes to the fuel rail.
Location:	On Engine Tray
Location Image:	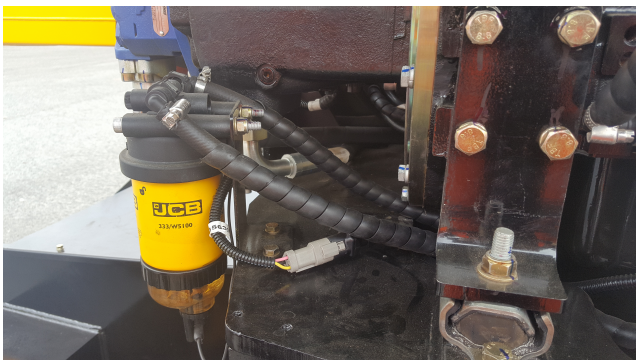

© 2025 Enter your company name

Signal:

Pin Number	Description	Wire Number
A	Ignition	1008
B	Signal	4066
C	GND	6018

Wires & Connectors:

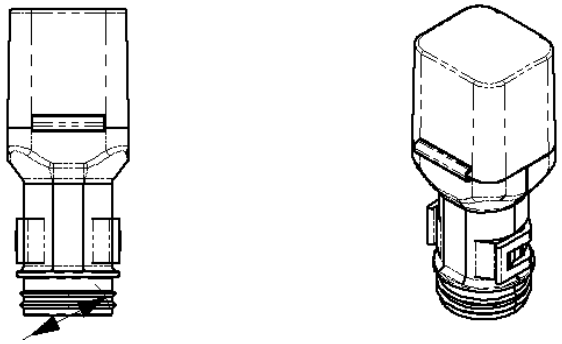

Internal Electrical Schematic:

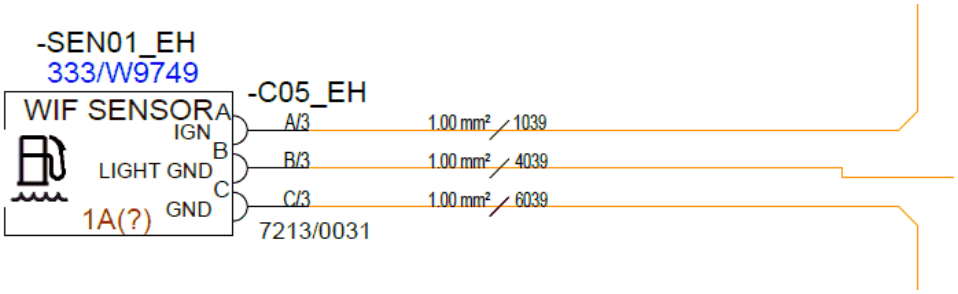

Testing:

Important: Use the multi-meter on the harness connector pins. DO NOT use the meter on the ECU pins.

Note- There should be beep if water in fuel

If water is detected in the fuel water separator filters while the engine is running or with the ignition in the on run position the water in fuel indicator light will illuminate - Check bowl for water and empty. If if empty and cant see now water in fuel then check wiring

as follows :

1. Sensor supply voltage fault-Check the presence of electrical supply on water sensor .If sensor supply voltage is OK, proceed to Step 2

2. Sensor connection faulty-Check condition of sensor to harness connection, make sure the seals are in place.Check for signs of corrosion or Contamination.Repair/replace as necessary.If no fault is found, proceed to Step 3.

3. Sensor failure-Remove the water sensor to fuel filter. Move the water sensor float to full stroke and control with a multimeter if the internal sensor

© 2025 Enter your company name

	switch works correctly.Change the switch if is needed. If no fault is found, proceed to Step 4 4. Wiring fault-Check the harness continuity, and machine and earth contacts. Repair/replace as necessary.If no fault is found, proceed to Step 5 5. ECU fault-Disconnect the harness from the ECU and inspect.Check seals are in place, check for signs of corrosion and pin damage. If harness is damaged repair/replace as necessary. If ECU pins are damaged, replace ECU and Reflash, see section on ECU flashing.If no fault is found, raise a Kohler Help desk Call.Sensor supply voltage is OK, proceed to Step 2nd.
Expected Values:	
Related Fault Codes:	P2269-64 - Water in fuel filter failure

4.5 Fuel Pump

Component:	Fuel Pump
Function:	• Fuel lift pumps function is to raise the level of fuel up through the system into the fuel injection system. • Fuel Pump draws the fuel from the fuel tank through fuel lines and delivers it through a fuel to either a carburetor of fuel injector and finally to the cylinder chamber for combustion.
Location:	The fuel pump is located in the engine tray
Location Image:	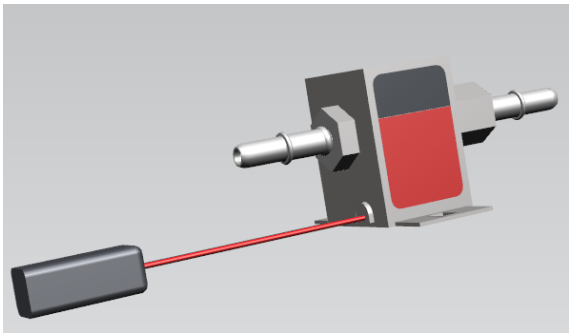
Signal:	<table><tr><td>Pin Number</td><td>Description</td><td>Wire Number</td></tr><tr><td>1</td><td>12V Feed</td><td>4002</td></tr></table>

© 2025 Enter your company name

	<table><tr><td></td><td></td><td></td></tr><tr><td>2</td><td>GND</td><td>6002</td></tr></table>
Wires & Connectors:	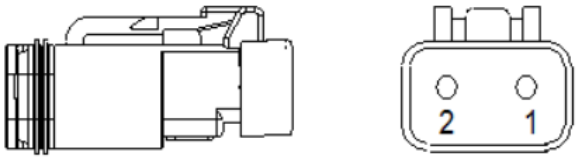 7212/0052 Side and Face View
Internal Electrical Schematic:	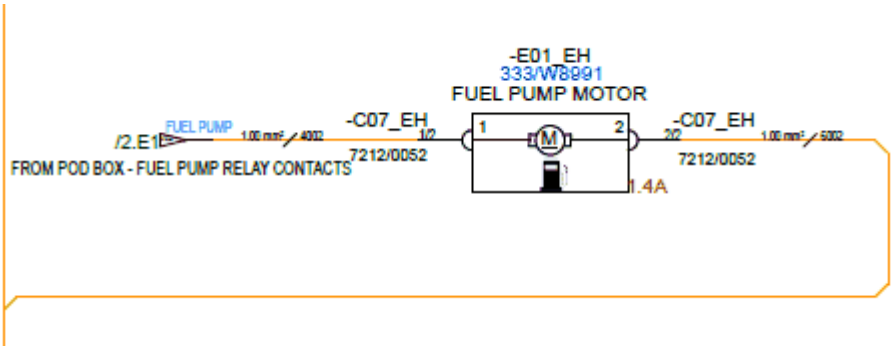
Testing:	Important: Use the multi-meter on the harness connector pins. DO NOT USE the meter on the ECU pins 1. Turn the ignition switch to on & Check priming sound for 20 second 2. If the priming sound is coming, Pump is OK 3. If the priming sound is not coming 4 Remove connector use test meter & check 12V supply is coming to pin 1 & wire no 4002 3.if 12V supply is not there check wiring & fuse F3 10A is OK 4. Replace fuse if fuse is faulty & recheck the 12V supply 5. Check for faulty fuel pump

© 2025 Enter your company name

	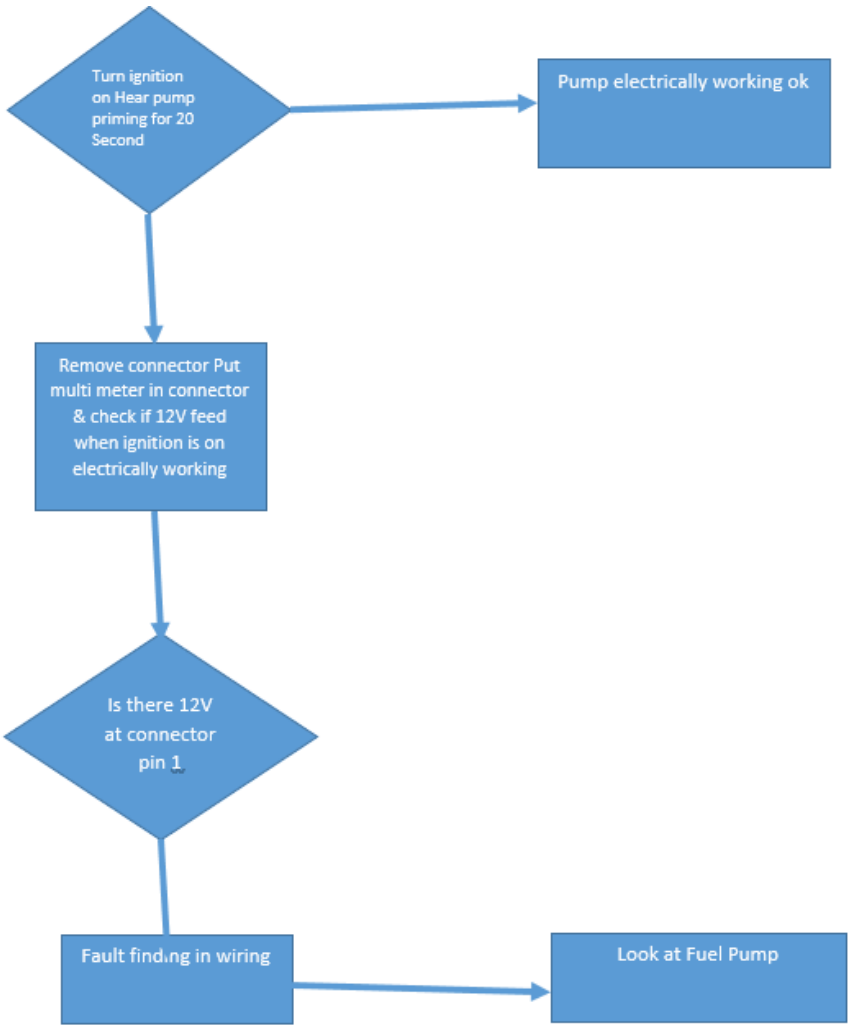
Expected Values:	
Related Fault Codes:	

4.6 Fuel Level Sensor

Component:	Fuel Level Sensor
Function:	The Sender is provide the fuel level remaining in the tank. This is displayed on the turntable display screen as a % of fill and also used for low fuel warning.

© 2025 Enter your company name

Location:	On Fuel Tank
Location Image:	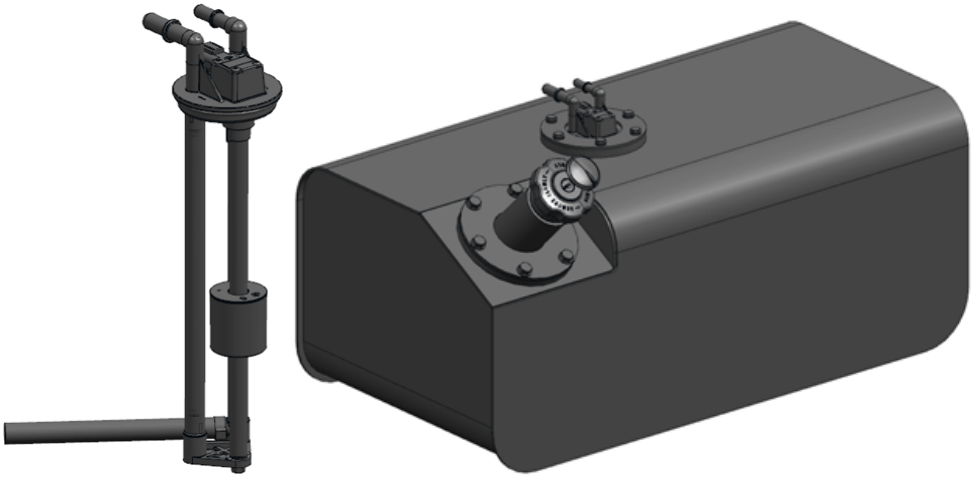
Signal:	<table><tr><th>Pin Number</th><th>Description</th><th>Wire Harness Numbers</th></tr><tr><td>1</td><td>Signal</td><td>4033</td></tr><tr><td>2</td><td>GND</td><td>60603H</td></tr></table>
Wires & Connectors:	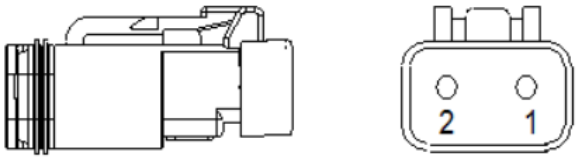 7212/0052 Side and Face View
Internal Electrical Schematic:	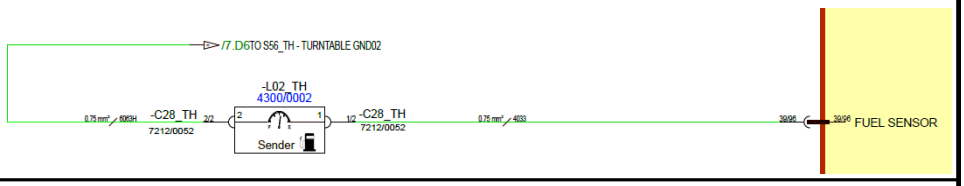
Testing:	Check Voltage on connector.
Expected Values:	
Related Fault Codes:	

© 2025 Enter your company name

4.7 Air Filter Vacuum Switch

Component :	Air Filter Vacuum Switch
Function:	The vacuum switch is on the air filter to detect for blockages and poor flow of air and warn the operator
Location:	On Air Filter Body
Location Image:	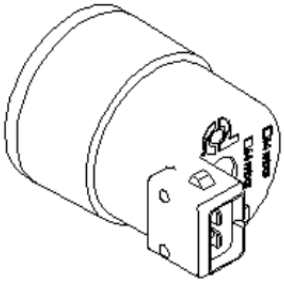 
Wires & Connectors:	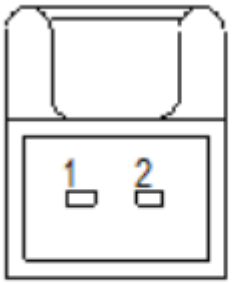 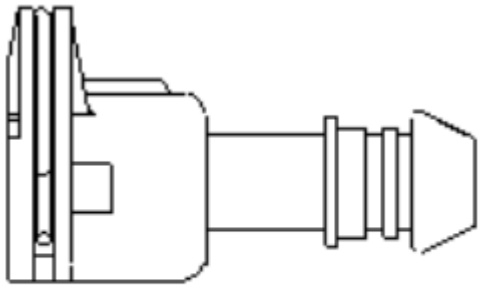 **7212/0013 Connector side and face view**
Signal:	

Pin Number	Description	Wire number
1	GND	6006
2	Signal	4023

© 2025 Enter your company name

Internal Electrical Schematic:	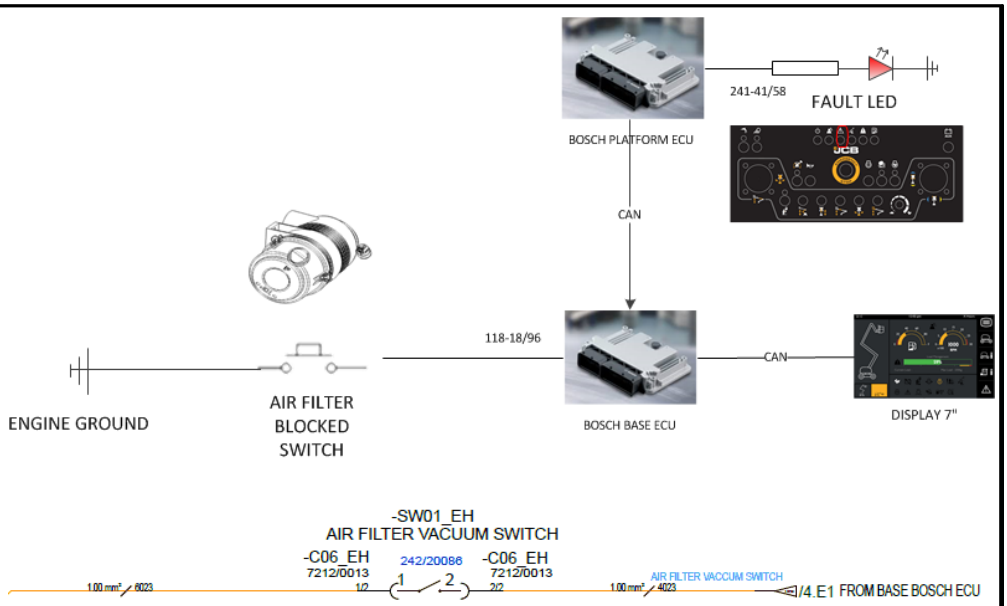
Testing:	Important: Use the multi-meter on the harness connector pins. DO NOT USE the meter on the ECU pins. 1. Turn on the ignition switch the ignition 2. See if the below symbol comes on base control display 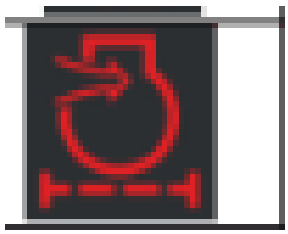 3. Check the filter and ensure if its blocked or not 4. if the filter is not blocked but still have this icon there may be wiring issue or broken switch 5. Remove air filter restriction indicator switch 6. Turn on the ignition switch 7. Check continuity on pin 1connector C06 to ground,this will be Open circuit 8. If air is blocked the switch will be closed circuit & pin 2 be ground Note-When the air filter is blocked the air filter vacuum switch will close

© 2025 Enter your company name

Expected Values:	
Related Fault Codes:	

Fault Code	Description
P2280-2F	Air filter clogging error
P2280-17	Air filter differential pressure sensor signal too high
P2280-16	Air filter differential pressure sensor signal too low

4.8 Grid Heater

Component:	Grid Heater
Function:	The grid heater will warm up the induction air to the engine when the ambient temperature is below
Location:	In Intake manifold, Engine
Location Image:	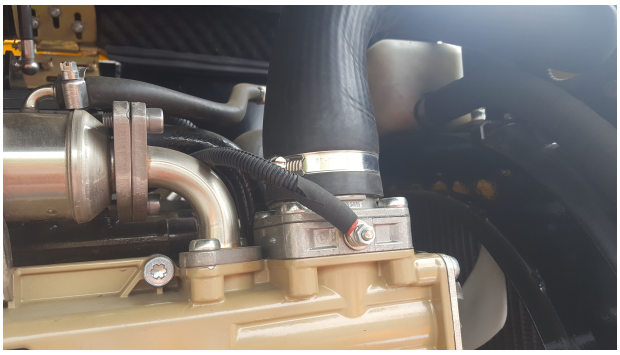
Signal:	The main feed will come from the grid heater relay
Wires & Connectors:	
Internal Electrical Schematic:	

© 2025 Enter your company name

	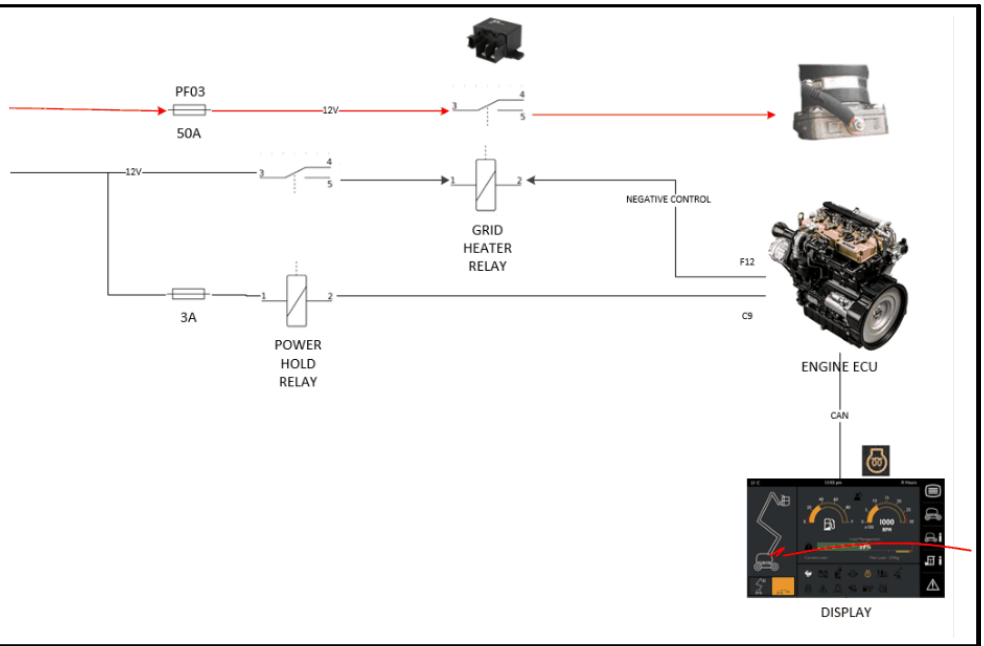
Testing:	Please refer Kohler Engine help file for Testing and Related Fault Codes
Expected Values:	
Related Fault Codes:	

4.9 Grid Heater Relay

Component :	Grid heater Relay
Function:	Grid heater Relay is used for switching purpose or ON-OFF.
Location:	On Engine Tray

© 2025 Enter your company name

Location Image:

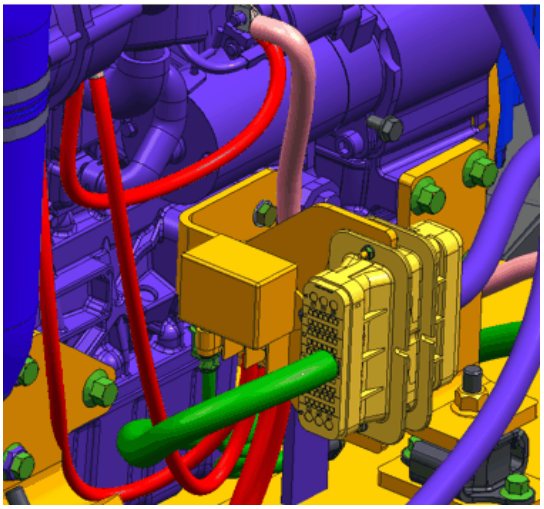

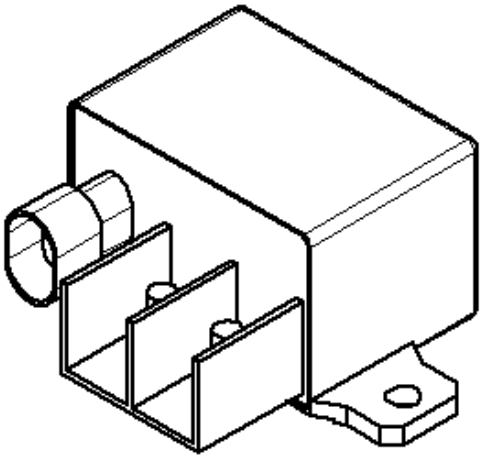

Signal:

Pin Number	Description	Wire number
1	Positive	1038
2	Negative	38
3	16sqmm	
4	16sqmm	

Wires & Connectors:



© 2025 Enter your company name

Internal Electrical Schematic:	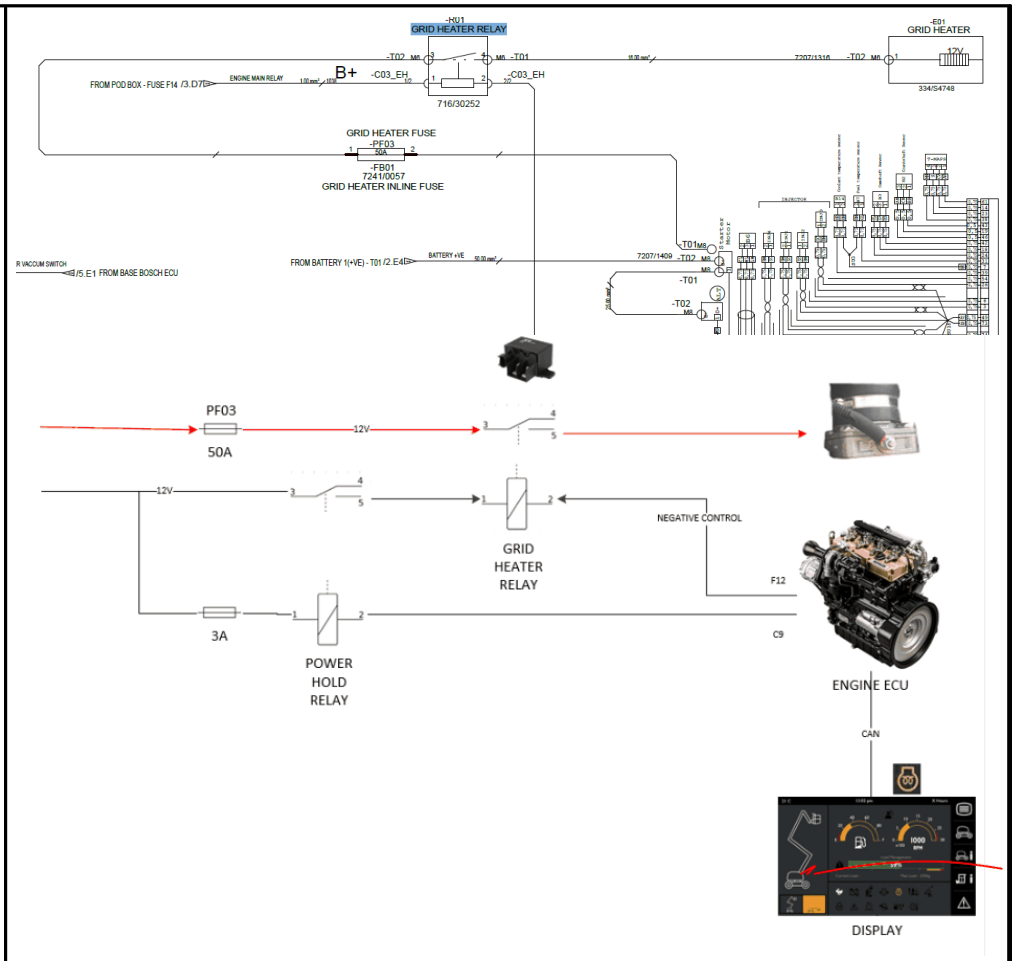
Testing:	Please refer Kohler Engine Help file
Expected Values:	
Related Fault Codes:	

4.10 Main Boom Lower Limit switch

Component :	Main Boom Lower Limit switch
Function:	• The main boom lower limit switch is to detect when the telescopic main boom is fully retracted.

© 2025 Enter your company name

<table>
<tr><td></td><td>

- This is also part of the machine mode that indicates whether the machine is in the Stowed or Raised mode.

</td></tr>
<tr><td>Location:</td><td>The switch is located on the side of the boom front knuckle cover plate</td></tr>
<tr><td>Location Image:</td><td> 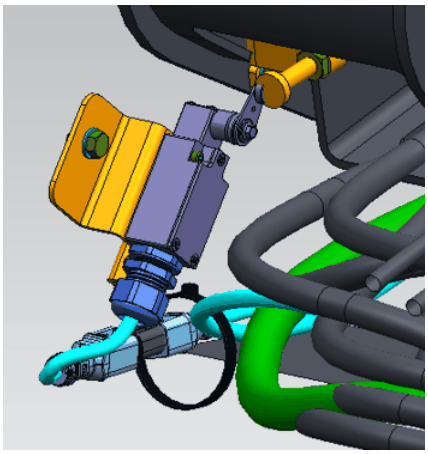 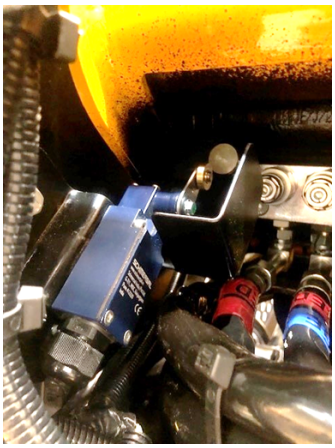 </td></tr>
<tr><td>Signal:</td><td>
<table>
<tr><th>Pin Number</th><th>Description</th><th>Wire Number</th></tr>
<tr><td>13 (1)</td><td>10V Feed</td><td>1024A</td></tr>
<tr><td>14 (2)</td><td>Switch Signal 1</td><td>4105</td></tr>
<tr><td>21 (3)</td><td>10V Feed</td><td>1024GB</td></tr>
<tr><td>22 (4)</td><td>Switch Signal 2</td><td>4106</td></tr>
</table>
</td></tr>
<tr><td>Wires & Connectors:</td><td>  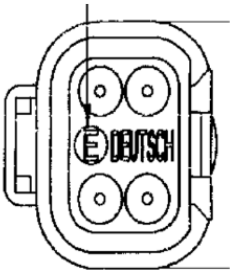 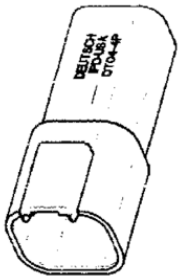 </td></tr>
<tr><td>Internal Electrical Schematic:</td><td> 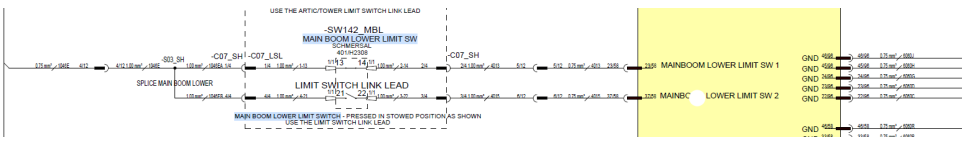
</td></tr>
<tr><td>Testing:</td><td>Important: Use the multi-meter on the harness connector pins. DO NOT USE the meter on the ECU pins.

1. Check the gland nut tightened properly there should be no water ingress</td></tr>
</table>

© 2025 Enter your company name

	2. Check the switch position pressed or undressed. 3. It should be un-pressed In natural state 4. Check the continuity between pin 13 and 14 it should be open circuit 5. Check the continuity between pin 21 and 22 it should be close circuit 6. When switch is pressed then Pin 13 & 14 should be closed circuit and 21 & 22 should be open circuit 7. Switch position is at 0 degree when is not pressed  8. Switches changes at 30 degrees going from center and 12 degrees on the way back towards center 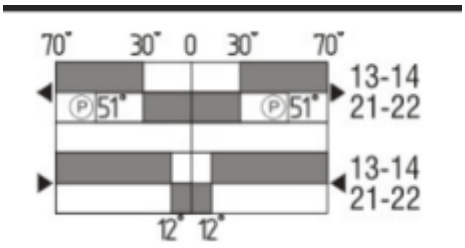
Expected Values:	
Related Fault Codes:	

Fault Code	Description
B1138-17	Main Boom Telescopic retract limit switch 1SC to High
B1139-17	Main Boom Telescopic retract limit switch 2SC to High
B1140-16	Main Boom Telescopic retract limit switch 1SC to Low
B1141-13	Main Boom Telescopic retract limit switch 1 and switch 2OC

© 2025 Enter your company name

	B1142-16	Main Boom Telescopic retract limit switch 2SC to Low
	B1143-92	Main Boom Telescopic retract limit switch 1 and switch 2 sh
	B1252-17	Main Boom Extend switch SC to High
	B1254-92	Main Boom extend and retract switches both activated (5-10
	B1255-16	Main Boom extend switch SC to low
	B1253-17	Main Boom to High Retract switch SC
	B1256-16	Main Boom Retract switch SC to Low

4.11 Main Boom Telescope retract Limit switch

Component:	Main Boom Telescope retract Limit switch
Function:	• The main boom telescopic retract switch is to detect when the telescopic section of the main boom is fully retracted. • This is also part of the machine mode that indicates whether the machine is in the Stowed or Raised mode in conjunction.
Location:	The switch is located on the side of the boom under the cover
Location Image:	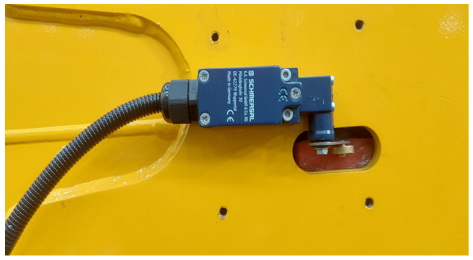 
Signal:	**Pin Number** / **Description** / **Wire Number** 13 (1) / 10V Feed / 1024A 14 (2) / Switch Signal 1 / 4105 21 (3) / 10V Feed / 1024GB 22 (4) / Switch Signal 2 / 4106

© 2025 Enter your company name

Wires & Connectors:	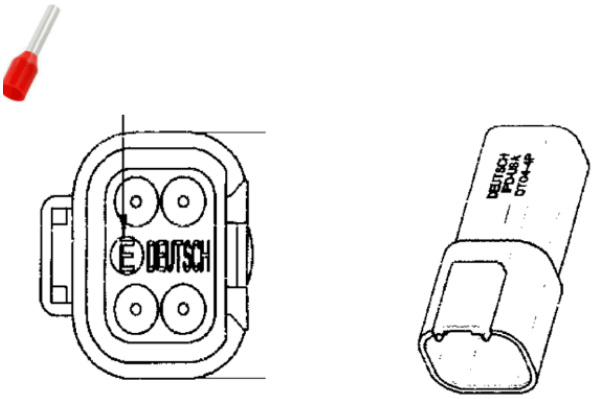
Internal Electrical Schematic:	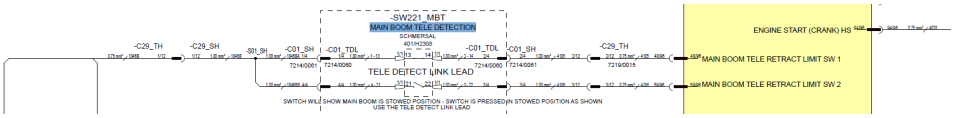
Testing:	Important: Use the multi-meter on the harness connector pins. DO NOT USE the meter on the ECU pins. 1. Check the gland nut tightened properly there should be no water ingress 2. Check the switch position pressed or undressed. 3. It should be un-pressed In natural state 4. Check the continuity between pin 13 and 14 it should be open circuit 5. Check the continuity between pin 21 and 22 it should be close circuit 6. When switch is pressed then Pin 13 & 14 should be closed circuit and 21 & 22 should be open circuit 7. Switch position is at 0 degree when is not pressed

© 2025 Enter your company name



8. Switches changes at 30 degrees going from center and 12 degrees on the way back towards center

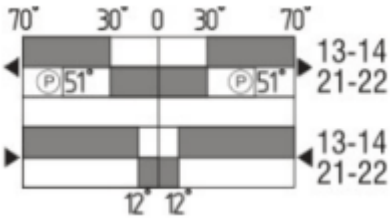

Expected Values:

Fault Code	Description
B1138-17	Main Boom Telescopic retract limit switch 1SC to High
B1139-17	Main Boom Telescopic retract limit switch 2SC to High
B1140-16	Main Boom Telescopic retract limit switch 1SC to Low
B1141-13	Main Boom Telescopic retract limit switch 1 and switch 2(
B1142-16	Main Boom Telescopic retract limit switch 2SC to Low
B1143-92	Main Boom Telescopic retract limit switch 1 and switch 2
B1252-17	Main Boom Extend switch SC to High
B1254-92	Main Boom extend and retract switches both activated (5-
B1255-16	Main Boom extend switch SC to low
B1253-17	Main Boom to High Retract switch SC
B1256-16	Main Boom Retract switch SC to Low

Related Fault Codes:

© 2025 Enter your company name

4.12 Articulated Boom Lower Limit Switch

<table>
<tr><td>Component:</td><td>Articulated Boom Lower Limit Switch</td></tr>
<tr><td>Function:</td><td>• Articulated boom limit switch is to detect when the arctic boom sections fully lowered
• This is also part of the machine mode that indicates whether the machine is in the Stowed or Raised mode.</td></tr>
<tr><td>Location:</td><td>The switch is located on the side of the boom under the cover</td></tr>
<tr><td>Location Image:</td><td>  </td></tr>
<tr><td>Signal:</td><td>
<table>
<tr><th>Pin Number</th><th>Description</th><th>Wire Number</th></tr>
<tr><td>13 (1)</td><td>10V Feed</td><td>1046A</td></tr>
<tr><td>14 (2)</td><td>Switch Signal 1</td><td>4009</td></tr>
<tr><td>21 (3)</td><td>10V Feed</td><td>1046GB</td></tr>
<tr><td>22 (4)</td><td>Switch Signal 2</td><td>4011</td></tr>
</table>
</td></tr>
<tr><td>Wires & Connectors:</td><td> 
 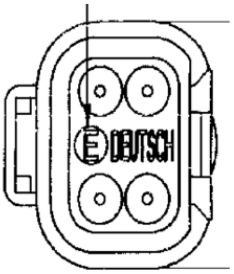
 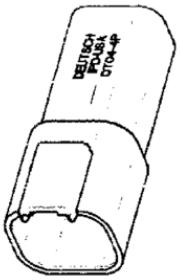 </td></tr>
</table>

© 2025 Enter your company name

Internal Electrical Schematic:	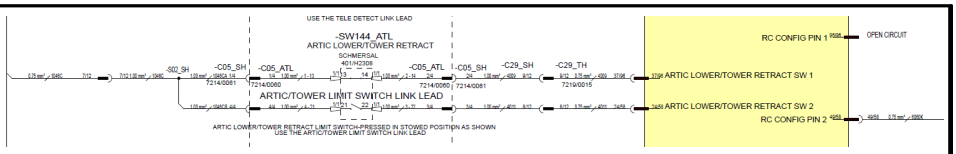
Testing:	Important: Use the multi-meter on the harness connector pins. DO NOT USE the meter on the ECU pins. 1. Check the gland nut tightened properly there should be no water ingress 2. Check the switch position pressed or undressed. 3. It should be un-pressed In natural state 4. Check the continuity between pin 13 and 14 it should be open circuit 5. Check the continuity between pin 21 and 22 it should be close circuit 6. When switch is pressed then Pin 13 & 14 should be closed circuit and 21 & 22 should be open circuit 7. Switch position is at 0 degree when is not pressed  8. Switches changes at 30 degrees going from center and 12 degrees on the way back towards center 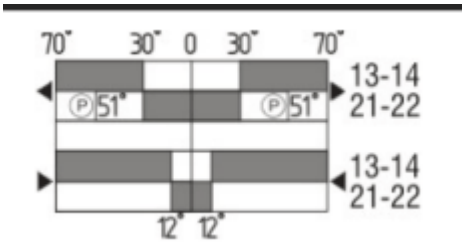

© 2025 Enter your company name

Expected Values:	
Related Fault Codes:	

Fault Code	Description
B1138-17	Main Boom Telescopic retract limit switch 1SC to High
B1139-17	Main Boom Telescopic retract limit switch 2SC to High
B1140-16	Main Boom Telescopic retract limit switch 1SC to Low
B1141-13	Main Boom Telescopic retract limit switch 1 and switch 2OC
B1142-16	Main Boom Telescopic retract limit switch 2SC to Low
B1143-92	Main Boom Telescopic retract limit switch 1 and switch 2 sh
B1252-17	Main Boom Extend switch SC to High
B1254-92	Main Boom extend and retract switches both activated (5-10
B1255-16	Main Boom extend switch SC to low
B1253-17	Main Boom to High Retract switch SC
B1256-16	Main Boom Retract switch SC to Low

4.13 Slew Position Limit Switch

Component:	Slew Position Limit Switch
Function:	• The Slew position limit sensor is to understand the slew position of the machine and operator. • As the machine is slewed round out of the forward position, the machine will pause any drive conditions until the operator has pressed the slew acknowledgment switch. This is so the operator is sure of the direction that the machine will operate in.
Location:	On Turntable

© 2025 Enter your company name

Location Image:

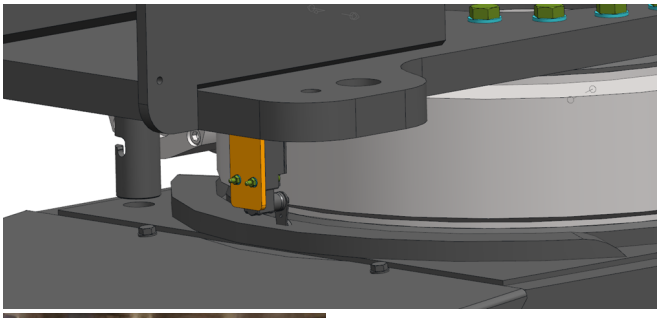



Signal:

Pin Number	Description	Wire number
13	10V	A-13
14	Slew position Sw 1	B-14
21	10V	A-21
22	Slew position Sw 2	C-22

© 2025 Enter your company name

Wires & Connectors:	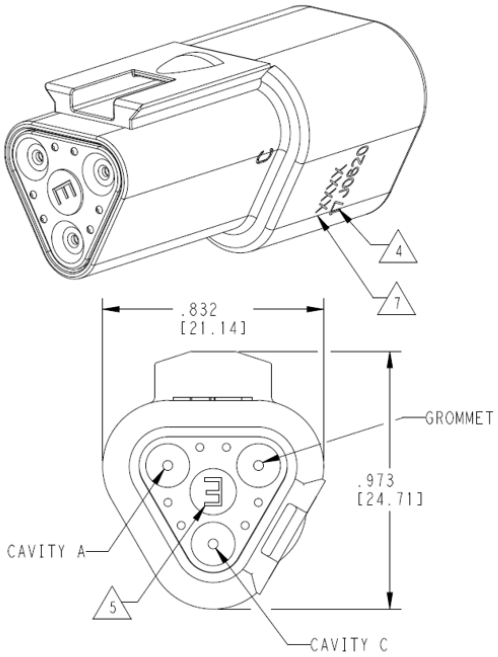
Internal Electrical Schematic:	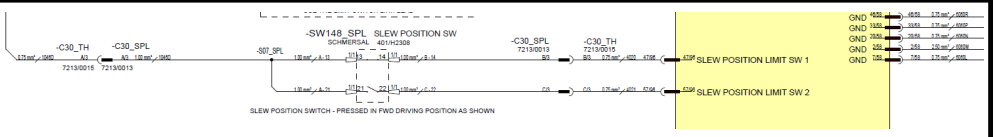
Testing:	Important: Use the multi-meter on the harness connector pins. DO NOT USE the meter on the ECU pins. 1. Check the gland nut tightened properly there should be no water ingress 2. Check the switch position pressed or undressed. 3. It should be un-pressed In natural state 4. Check the continuity between pin 13 and 14 it should be open circuit 5. Check the continuity between pin 21 and 22 it should be close circuit 6. When switch is pressed then Pin 13 & 14 should be closed circuit and 21 & 22 should be open circuit 7. Switch position is at 0 degree when is not pressed 8. Switches changes at 30 degrees going from center and 12 degrees on the way back towards center
Expected Values:	

© 2025 Enter your company name

Related Fault Codes:	

Fault Code	Description
B1019-17	Slew position limit switch 1 short circuit to high
B1020-17	Slew position limit switch 2 short circuit to high
B1021-16	Slew position limit switch 1 short circuit to low
B1022-13	Slew position limit switch 1 and 2 open circuit
B1023-16	Slew position limit switch 2 short circuit to low
B1024-92	Slew position limit switch 1 and 2 both at 10V at the same tir

4.14 Alternator Resistor

Component:	Alternator Resistor
Function:	The alternator resistor is used to excite the alternator and ensure the alternator no charge LED is switched off at the correct time.
Location:	On Engine
Location Image:	

Signal:

Pin number	Description	wire number
1	12V feed	1010
2	Signal	1011

Wires & Connectors:



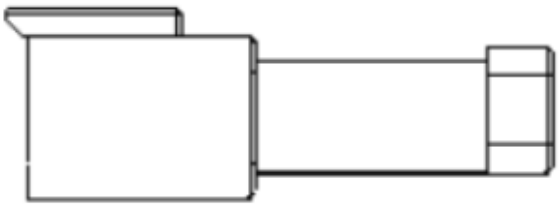

© 2025 Enter your company name

Internal Electrical Schematic:	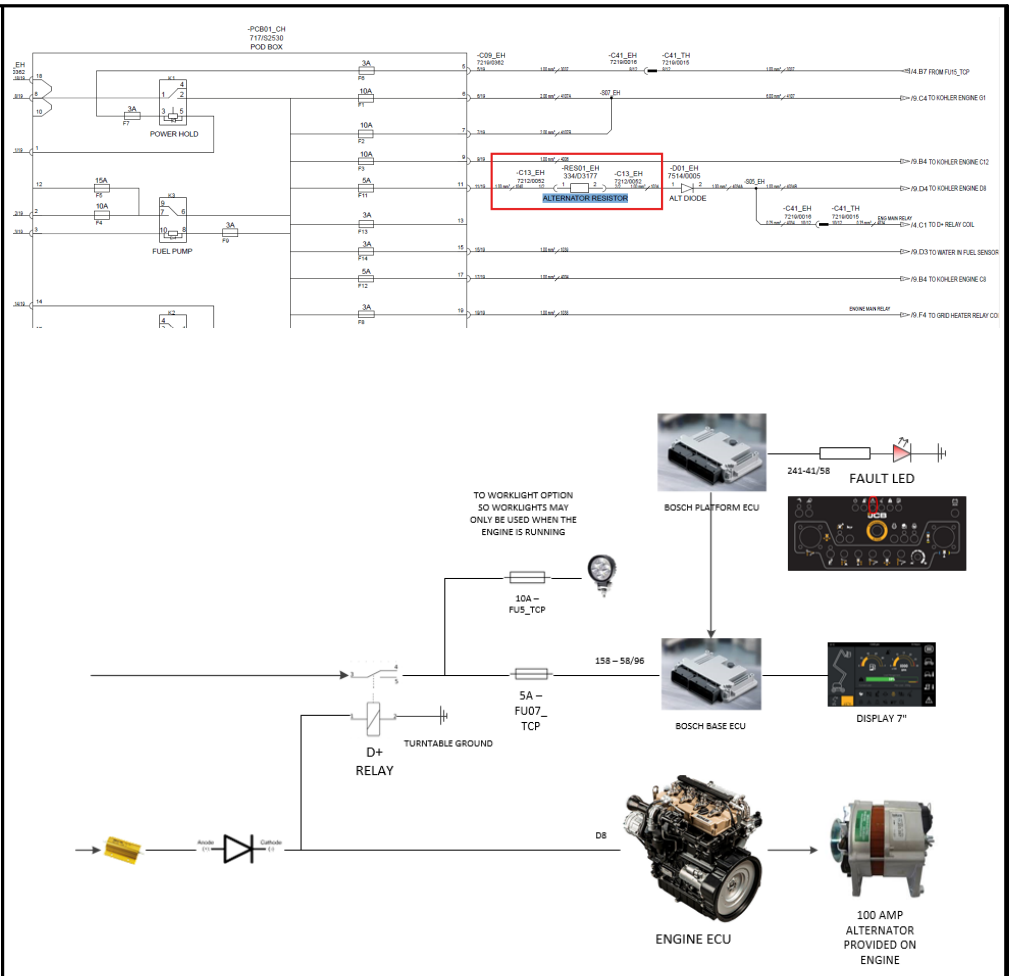
Testing:	Important: Use the multi-meter on the harness connector pins. DO NOT USE the meter on the ECU pins 1.Using a multimeter measure the resistance between pin 1 and pin 2. It should read 39?
Expected Values:	
Related Fault Codes:	B1300-2F - Alternator Fault

4.15 Engine POD Box

Component:	Engine POD Box

© 2025 Enter your company name

Function:	The pod box is to provide power for the Kohler engine.
Location:	Protection: This box designed for all fuses protecting the Kohler Engine
Location Image:	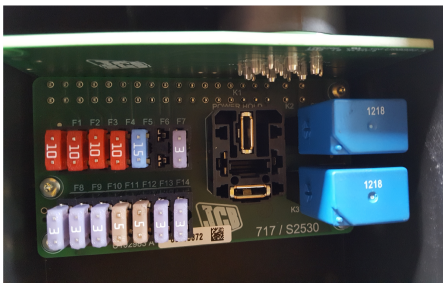 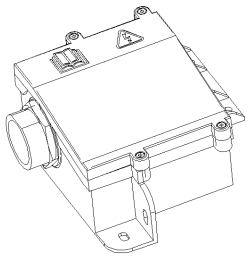

Signal:

Relay designation	Relay rating (Amps)	Function
K1	30/20	Power Hold Relay
K2	35/20	Starter Relay
K3	35/20	Fuel Pump Relay

Fuse designation	Fuse rating (Amps)	Function
F1	10	Engine G1 - 12 V power supply, from m relay
F2	10	Engine G1 - 12 V power supply, from m relay
F3	10	Engine C12 - 12 V power supply for EC valve
F4	10	Fuel Pump Motor Feed
F5	15	Fuel Pump Motor Feed
F6	3	Power Box
F7	3	Power box
F8	3	Grid heater relay coil
F9	3	Fuel pump relay coil
F10	3	Starter relay coil
F11	5	Engine D8 - Alternator D+ terminal
F12	5	Engine C8 - 12 V power supply, from bat
F13	3	NA
F14	3	Water in fuel sens

Wires & Connectors:	Connector Part number is 7219/0362

© 2025 Enter your company name

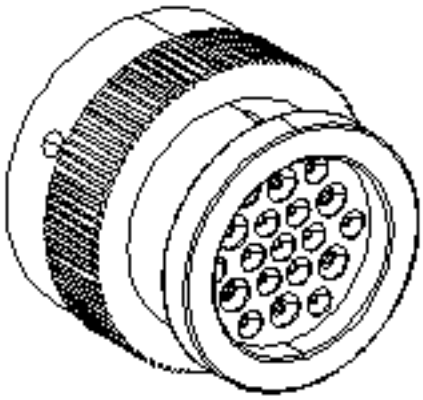

PICTORIAL VIEW
FOR CLARITY

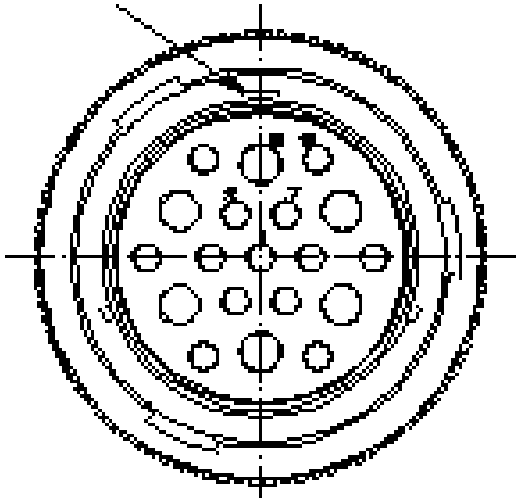

Internal Electrical Schematic:

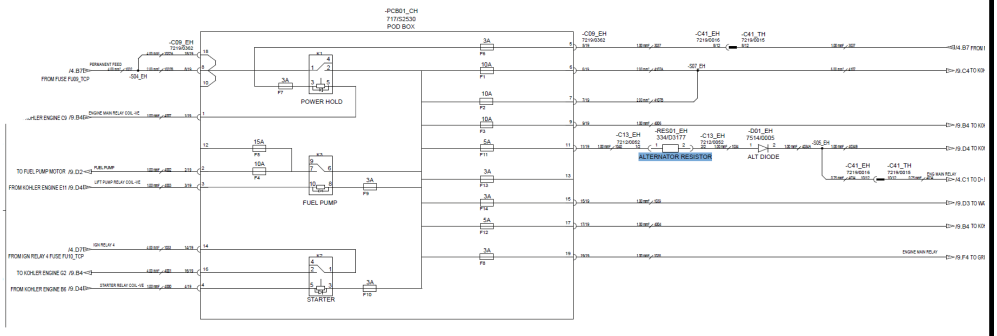

Testing:

Important: Use the multi-meter on the harness connector pins. DO NOT USE the meter on the ECU pins

1.Check all the connection in Pod Box are properly secure

2.Check the continuity in all connections, fuse & relay located inside Pod Box

© 2025 Enter your company name

Expected Values:	
Related Fault Codes:	No Fault Code related to POD Box

4.16 Work Light (Optional Fit)

Component :	Work Light (Optional Fit)
Function:	• The work-light is LED and is optional fit. • It will only operate when the engine is running. • A work light is a high-intensity light fixture which is used to illuminate the stage for the benefit of technicians
Location:	On Platform Rail
Location Image:	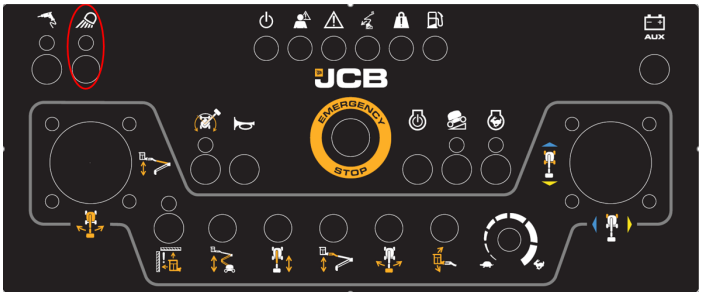  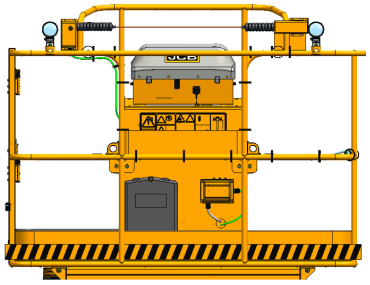
Signal:	C02_LWH Pin Number / Description / Wire Number 1 / D+ Supply / 8079B 2 / GND / 6079B C03_LWH

© 2025 Enter your company name

	<table><tr><th>Pin Number</th><th>Description</th><th>Wire Number</th></tr><tr><td>1</td><td>D+ Supply</td><td>8079B</td></tr><tr><td>2</td><td>GND</td><td>6079B</td></tr></table>
Wires & Connectors:	
Internal Electrical Schematic:	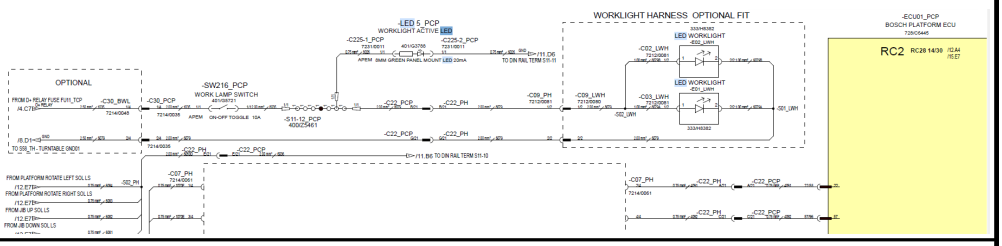
Testing:	Important: Use the multi-meter on the harness connector pins. DO NOT USE the meter on the ECU pins 1.Disconnect the electrical connector from the beacon. 2. With the ignition on, and the work light button selected, check using a multimeter if there is 12V present at pin 1 and at pin 2 the earth resistance . 3 If there is 12V present and the earth resistance is within range, replace the work light
Expected Values:	
Related Fault Codes:	

© 2025 Enter your company name

4.17 Batteries

Component:	Batteries
Function:	The batteries are to provide the main power for the machine.Be careful when working around batteries as there is 2 batteries in parallel.
Location:	Battery is located at rear side of chassis, near rear axle.
Location Image:	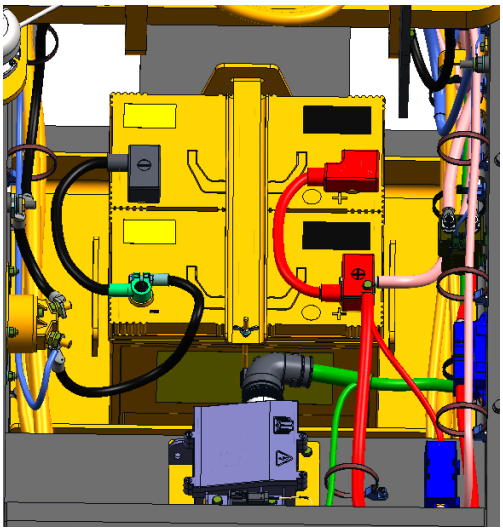 
Signal:	12 volt, parallel connection

© 2025 Enter your company name

Wires & Connectors:	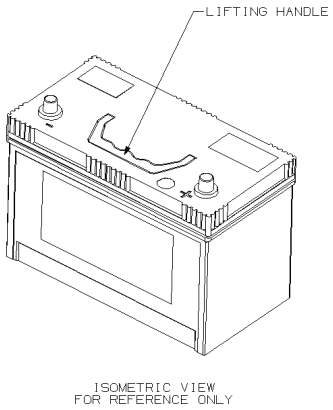
Internal Electrical Schematic:	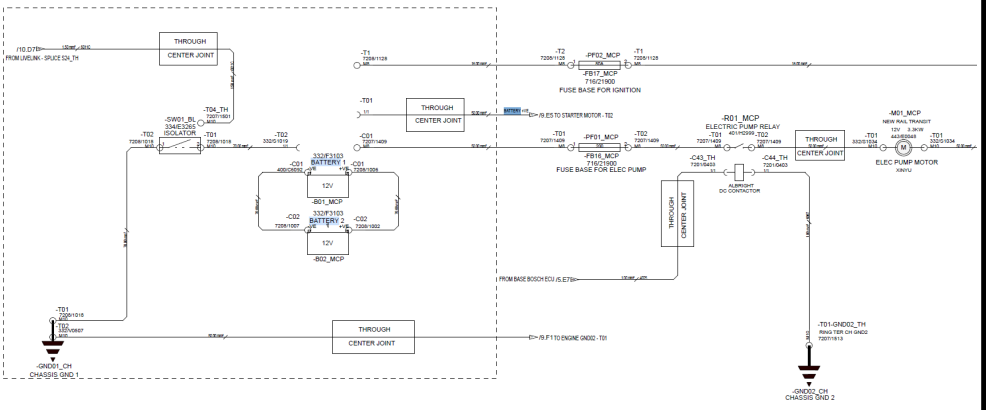
Testing:	Important: Use the multi-meter on the harness connector pins. DO NOT USE the meter on the ECU pins 1. Battery Discharged-Ensure the battery has sufficient charge to power the machine. Test state of charge using a battery charger/conditioner. Recharge/replace as required.If battery has sufficient charge or fault remains, proceed to step 2. 2. Battery connection fault-Check the electrical connectors from the battery for signs of damage/corrosion, clean the terminals and apply a suitable electrically conductive grease to the connections. Repair/replace battery or connectors as necessary. If the fault remains, proceed to Step 3. 3. Poor Earth-Check battery earth and machine earth(s) for signs of damage/corrosion, clean the terminals and ensure bolts are tighten to the appropriate torque (see machine service manual for torque value).If the fault remains, proceed to Step 4.\ 4. Battery fault-Test battery voltage and power hold relay voltage at the ECU. Compare these 2 values. If values do not match, follow the relay testing procedure below: a. Repair or replace as required.

© 2025 Enter your company name

	b. With the relay installed, apply 5V across the relay. If the relay does not click, replace the relay. If the fault is still active proceed to step 5. c. Check continuity back to power supply - especially around the pins and coils. Turn on the ignition and check for 5V at the power hold fuse, Pod box connector, inside the Pod box at the power hold relay base power in terminal. Repair or replace as required. If the fault remains, proceed to Step 5. 5. Battery charging circuit-Check the battery charge circuit (see engine service manual for alternator diagnosis and repair).Repair/replace as necessary.
Expected Values:	12 V
Related Fault Codes:	

4.18 White Noise Alarm

Component :	White Noise Alarm
Function:	The travel white noise alarm will sound when the machine is traveling or steering to make people around the machine aware or machine movement. The travel white noise alarm will only come on when command from the platform control station for drive or steer is applied The travel alarm may be turned off through the display or service-master
Location :	On Turntable RHS

© 2025 Enter your company name

Location Image:

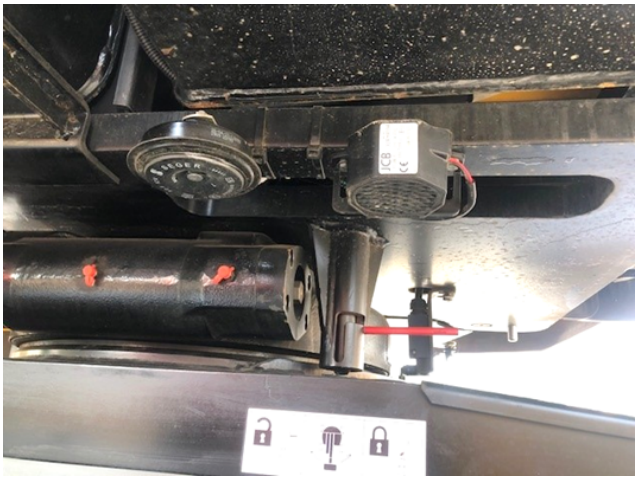

Signal:

Pin Number	Description	Wire Numbers
1	12V	4036C
2	GND	6022

Wires & Connectors:

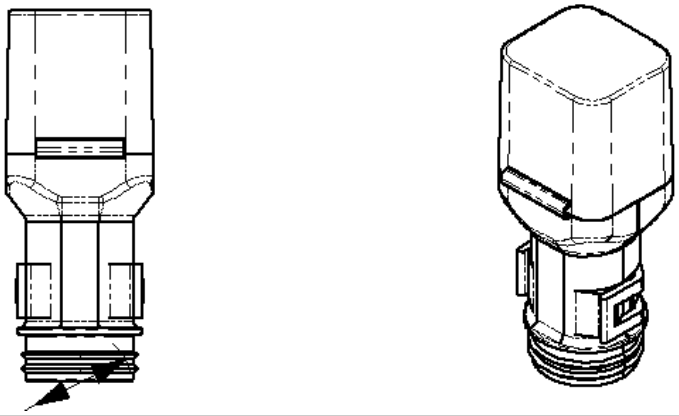

Internal Electrical Schematic:

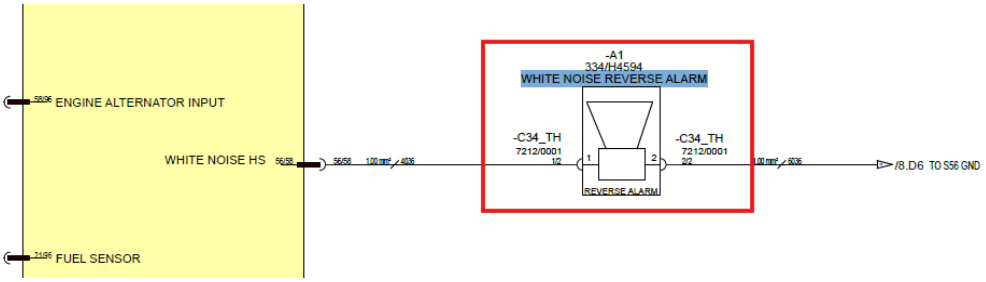

Testing:

Important: Use the multi-meter on the harness connector pins. DO NOT USE the meter on the ECU pin

Before fault finding on the white noise alarm ensure that it is enabled in the software.

© 2025 Enter your company name

	To check the white noise alarm, go to the platform control station and press the foot pedal and use drive joystick for either drive forwards and backwards or steer functions. 1. The foot pedal is fed from 10V ECU pin (232-32/58) platform ECU 2. Foot pedal input (147-47/96) on the platform ECU 3. The joystick feed is via a 5V ECU pin (255-55/58) platform ECU 4. Joystick drive pin (120-20/96) platform ECU 5. Steer joystick pin (141-41/96) platform ECU 6. White noise alarm output (256-56/58) turntable ECU
Expected Values:	
Related Fault Codes:	

4.19 Beacon

Component:	Beacon
Function:	• The travel beacon will flash when the machine is traveling or steering to make people around the machine aware or machine movement. • The beacon will only come on when command from the platform control station
Location:	Top side of Counter Weight

© 2025 Enter your company name

Location Image:

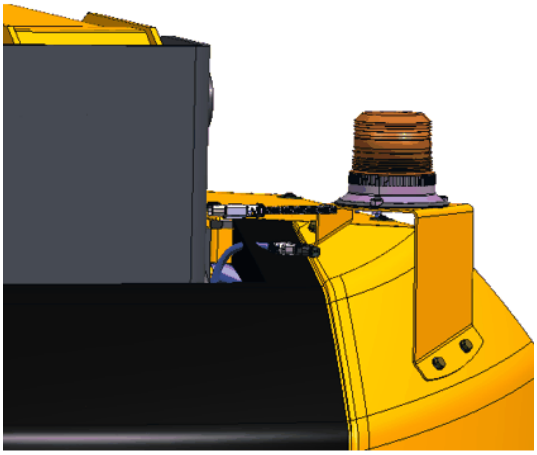

Signal:

Pin Number	Description	Wire number
1	Beacon positive from 43/58 turntable ECU	4036
2	Negative - turntable GND	6063K

Wires & Connectors:

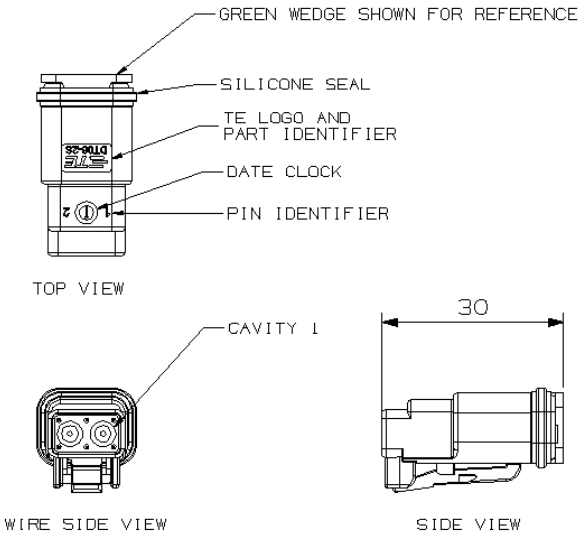

Internal Electrical Schematic:

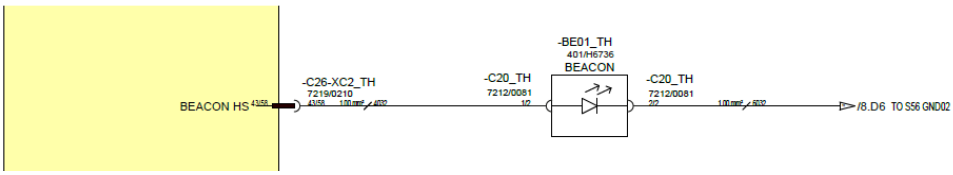

Testing:

Important: Use the multi-meter on the harness connector pins. DO NOT USE the meter on the ECU pins.

1. Disconnect the electrical connector from the beacon.

© 2025 Enter your company name

	2. With the ignition on, and the beacon button selected, check using a multimeter if there is 12V present at pin 1 and at pin 2 the earth resistance (harness side). 3. If there is 12V present and the earth resistance is within range, replace the beacon/beacon socket. 4. If there is not 12V present check fuse FU19 and the beacon relay , if the resistance is outside the range specified in step 2, check the continuity of the wire and condition of the earth stud
Expected Values:	12 V
Related Fault Codes:	**Fault Code** / **Description** B1179-13 / BEACON OC B1180-16 / BEACON SC to Low

4.20 Isolator

Component:	Isolator
Function:	• The isolator is fitted to isolate the machine for maintenance. • This should not be used to cut power while the engine is on. • Always take care when working on machine isolator • Always ensure cables are wired to schematic as there is cables to both sides of the isolator, this is to allow permanent connections when the key is out such as display clock and Livelink.
Location:	On Turntable LHS
Location Image:	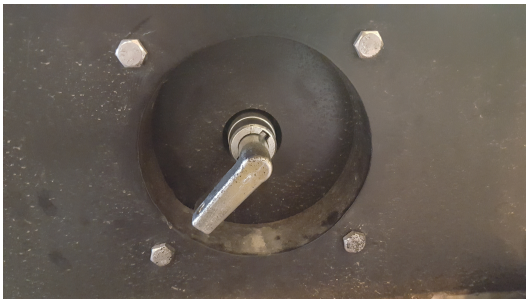
Signal:	12 V

© 2025 Enter your company name

Wires & Connectors:	Connections to the isolator are M10 Ring terminals  The thickest cable should always be put on to isolator first and thinnest at the top.
Internal Electrical Schematic:	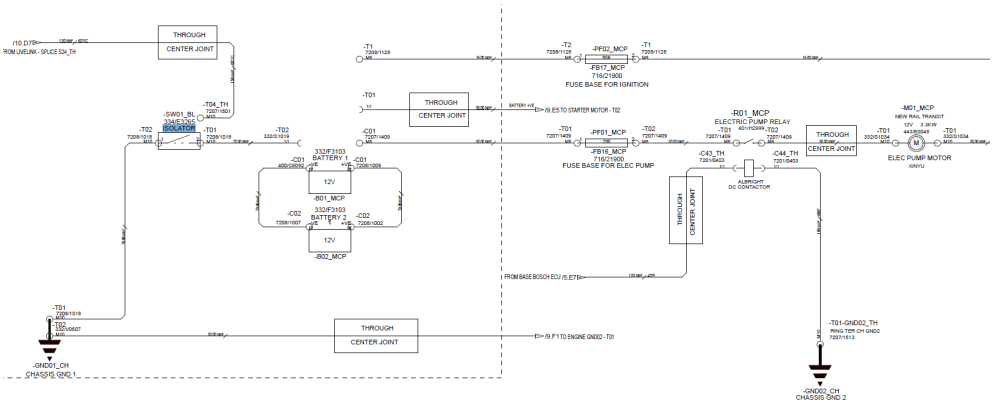
Testing:	**Identify the issue** 1. Test the isolator using a multimeter across the back of the 2 terminals. 2. With the key removed this should show open circuit across the switch 3. When the key is inserted and turned to the ON position the multimeter should show closed circuit. If the isolator does not show this then replace the part or contact JCB Service department
Expected Values:	12 V
Related Fault Codes:	

© 2025 Enter your company name

4.21 Kohler Engine ECU

Component:	Kohler Engine ECU
Function:	• The Engine ECU is a Kohler ECU. • This page will only show mounting. See Kohler Help files for more details on control system
Location:	On Chassis Near engine tray
Location Image:	 
Signal:	
Wires & Connectors:	
Internal Electrical Schematic:	
Testing:	Please refer Kohler Manual
Expected Values:	
Related Fault Codes:	

© 2025 Enter your company name

4.22 Horn

Component:	Horn
Function:	• The horn can be pressed from the Base or platform control station. There is only one horn output which is below the base control box. • The horn input buttons are fed from a 10V feed on the Bosch ECU (Pin 32/58 - VSS2). • Once the button is pressed the 10V will pass through to the Horn input pin on the ECU (Pin 52/58) • The platform ECU will communicate to the base ECU over CAN communication. • The output for the Horn is from the base ECU, (Pin 44/58) • When an input signal is received the horn output (Pin 44/58) will output 12V's and then enable the Horn relay. • As the relay pulls in the horn will sound.
Location:	On Turntable LHS
Location Image:	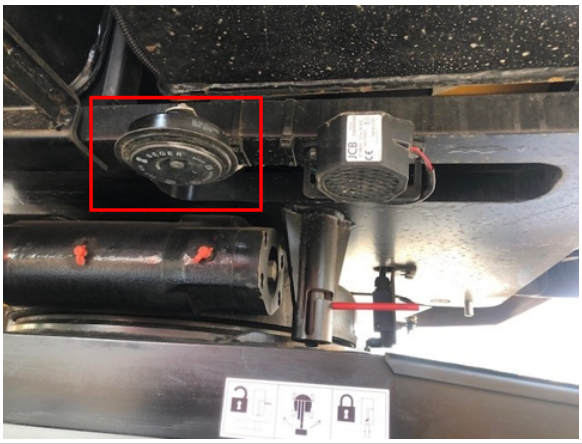
Signal:	12 V

© 2025 Enter your company name

Wires & Connectors:	-C17_TH#1 7212/0008 HORN 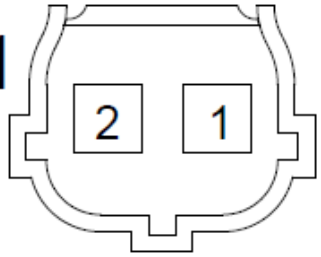 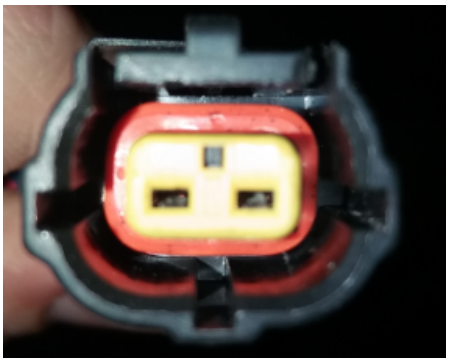
Internal Electrical Schematic:	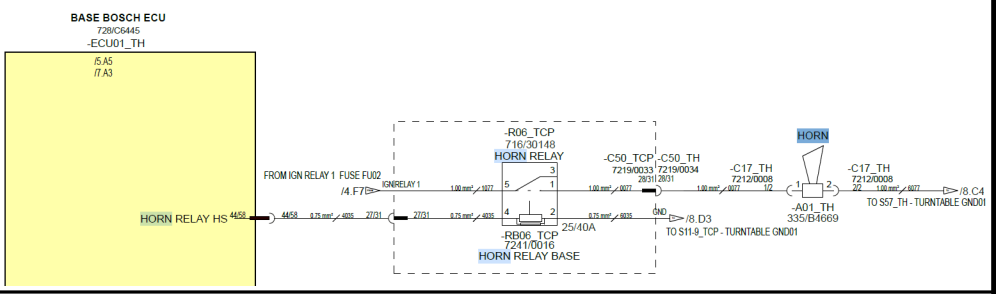
Testing:	**Identify the issue** 1. Visual check around machine and visual check of horn. 2. Turn the ignition on and wait for 3 beeps from control panel to ensure ECU start up. 3. Check for error codes on the display - see fault code list to resolve, if not move to next step. 4. Navigate through the display to inputs (turntable or platform depending on button being pressed) or connect service-master diagnostic tools and go to the horn page. 5. Press the horn button (turntable or platform) and check if input is received by ECU. 6.If the input is received then repeat with the output menu to identify which side is failing.

© 2025 Enter your company name

<table>
<tr><td></td><td>Outcome

1. If the input is not received then check voltage at input switch (should be 10V), switch logic and then wire between switch and ecu pin (52/58).

2. If both input is received and output is activated, check the voltage at the horn connector, if voltage is available, check the horn.

3. if no voltage at the horn connector, check relay R05, & 10A fuse at FU02 in turntable control panel.

4. If no voltage at FU02 then check ignition relay 1 (R01_TCP).

5. If the input is received with no output, contact JCB Service team as likely software issue.</td></tr>
<tr><td>Expected Values:</td><td></td></tr>
<tr><td>Related Fault Codes:</td><td><table><tr><th>Fault Code</th><th>Description</th></tr><tr><td>B1181-16</td><td>Horn Output, high side has a short to ground at the base EC</td></tr><tr><td>B1182-13</td><td>Horn Output, high side has a open at the base ECU</td></tr></table></td></tr>
</table>

4.23 Axle Lock Pressure Sensor

Component:	Axle Lock Pressure Sensor
Function:	The Axle lock pressure sensor is there to ensure the control system has locked the axle correctly and to give feedback to the machine control system
Location:	Rear Side of Chassis

© 2025 Enter your company name

Location Image:

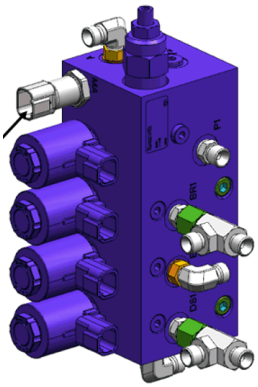

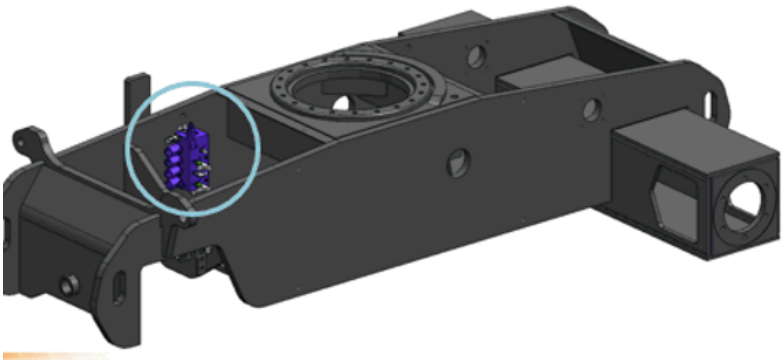

Signal:

Pin Number	Description	Wire number
1	GND	6063L
2	12V from ignition relay 2	1024A
3	NOT USED	NOT USED
4	Signal output to Bosch ecu	4034

Wires & Connectors:

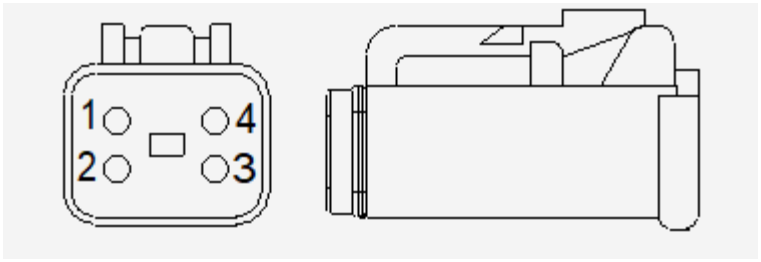

Internal Electrical Schematic:

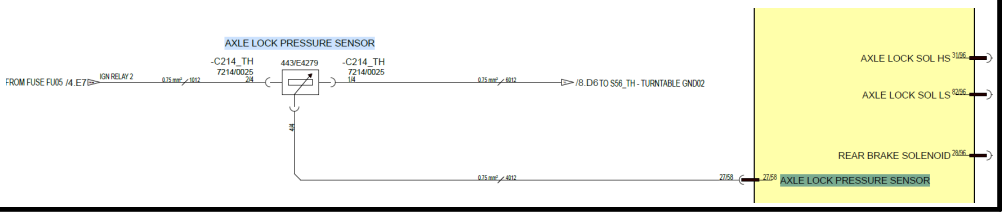

© 2025 Enter your company name

<table>
<tr><td>Testing:</td><td>Important: Use the multi-meter on the harness connector pins. DO NOT USE the meter on the ECU pins

1. Axle lock pressure sensor measure pressure and convert to voltage

2. Ensure no water ingress inside sensor

3. Check out put signal at connector C214_TH Pin no 4/4. This should read 0.5V to 4.5V

4. If there is no out put check input voltage at connector C214_TH (Pin 1 & 2) this should read 12V

5. If there is no 12V then investigate wiring as per schematic

6. If there is 12V inputs available but no out put signal then it might internal damage to sensor, Replace it</td></tr>
<tr><td>Expected Values:</td><td>12 V</td></tr>
<tr><td>Related Fault Codes:</td><td><table>
<tr><th>Fault Code</th><th>Description</th></tr>
<tr><td>B1138-17</td><td>AXLE LOCK PRESSURE SENSOR SC to High</td></tr>
<tr><td>B1139-17</td><td>AXLE LOCK PRESSURE SENSOR SC to Low or OC</td></tr>
<tr><td>B1348-16</td><td>OSCILLATING AXLE PRESSURE SENSOR SOFTWARE Failure</td></tr>
</table></td></tr>
</table>

4.24 Platform and Jib Valve Block

Component:	Platform and Jib Valve Block
Function:	• This valve block is used to divert oil between the Jib and Platform rotate functions. • When the platform rotate or Jib switch is pressed this enables the correct solenoid to energize. • This is used in conjunction with the Public proportional solenoid and platform flow solenoid from the turntable valve block
Location:	Near Platform Rotator

© 2025 Enter your company name

Location Image:

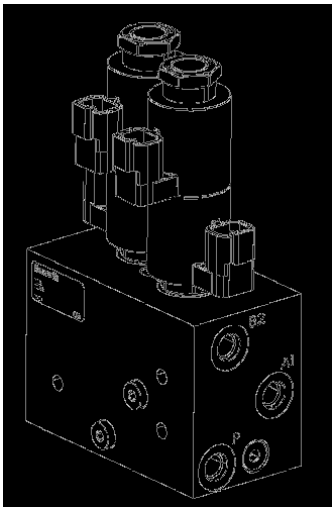



Signal:

Solenoid	Pin Number	Description	Wire Number on Harness
Platform Rotate Right	1	Feed	4083
Platform Rotate Right	2	GND	6050C
Platform Rotate Left	1	Feed	4084
Platform Rotate Left	2	GND	6050G
Jib Down	1	Feed	4081
Jib Down	2	GND	6050A
Jib Up	1	Feed	4082
Jib Up	2	GND	6050B

Wires & Connectors:

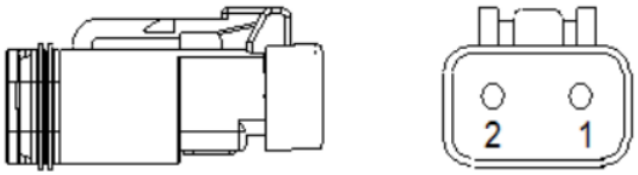

Internal Electrical Schematic:

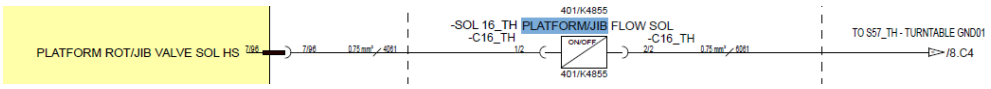

Testing:

Important: Use the multi-meter on the harness connector pins. DO NOT USE the meter on the ECU pins..

1. Using a solenoid pen, check to see if the solenoid is powered when the function is in use.

© 2025 Enter your company name

	2. If the solenoid pen shows no power, disconnect the harness from the solenoid. 3. Check the resistance across the solenoid. The reading should as per specification as mentioned in below table 4. If readings are incorrect, replace the solenoid. If correct disconnect the harness at the ECU and check harness continuity, repair/replace if necessary 5. If the harness continuity is OK, replace the solenoid
Expected Values:	
Related Fault Codes:	**Fault Code** / **Description** B1329-13 / JIB/PLATFORM FLOW Sol SC to High or OC B1330-16 / JIB/PLATFORM FLOW Sol SC to Low

4.25 Weight Sensor

Component:	Weight Sensor
Function:	• The load cell is to understand the load in the platform. • This is 2 channel and is part of the machines safety functions
Location:	The load cell is located near the platform control station
Location Image:	 
Signal:	**Sensor 1** **Pin Number** / **Description** / **Wire number** / **Colour** A / 12V Feed / 1075R / red

© 2025 Enter your company name

	<table><tr><td>B</td><td>Signal output (4-20mA)</td><td>4101</td><td>green</td></tr><tr><td>C</td><td>GND</td><td>6048C</td><td>black</td></tr><tr><td colspan="4"></td></tr><tr><td colspan="4">**Sensor 2**</td></tr><tr><td>**Pin Number**</td><td>**Description**</td><td>**Wire number**</td><td>**Colour**</td></tr><tr><td>A</td><td>12V Feed</td><td>1075T</td><td>Red</td></tr><tr><td>B</td><td>Signal output (4-20mA)</td><td>4102</td><td>Green</td></tr><tr><td>C</td><td>GND</td><td>6048B</td><td>Black</td></tr></table>
Wires & Connectors:	Harness side connectors Sensor side connector 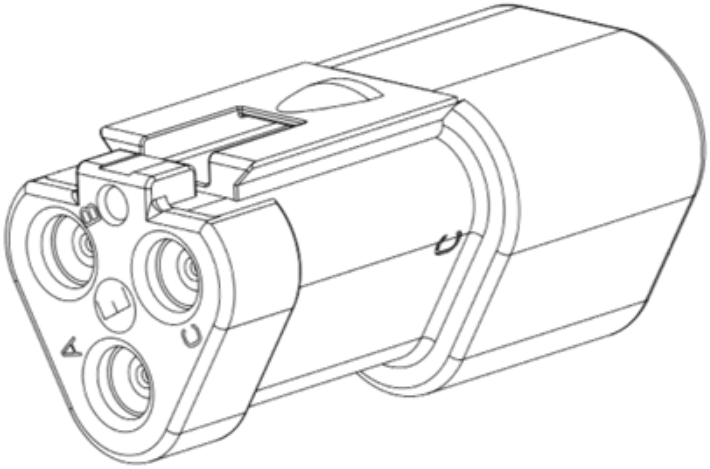 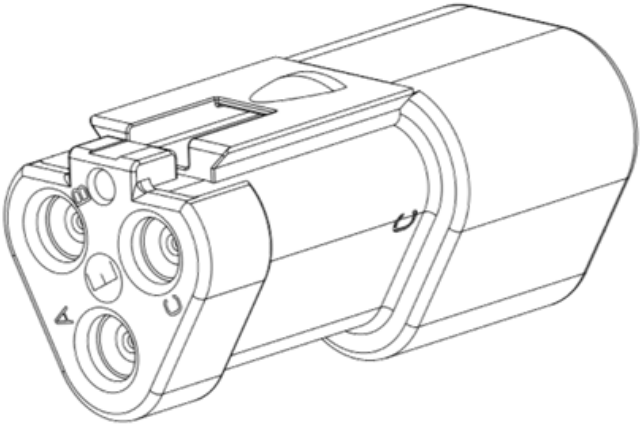

© 2025 Enter your company name

Internal Electrical Schematic:	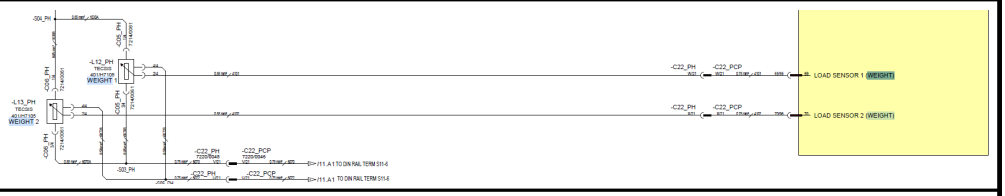
Testing:	Important: Use the multi-meter on the harness connector pins. DO NOT USE the meter on the ECU pins. 1. The weight sensor fitted on machine have two channels 2. Double channel load cell which is fitted at the point the platform is connected. 3. Each channel is connected with 3 Pins A for power supply (12V) Pin C for ground Pin B for output (analogue) 4. Make sure assembly of load cell is done as per SOP mentioned below (143/E0110) 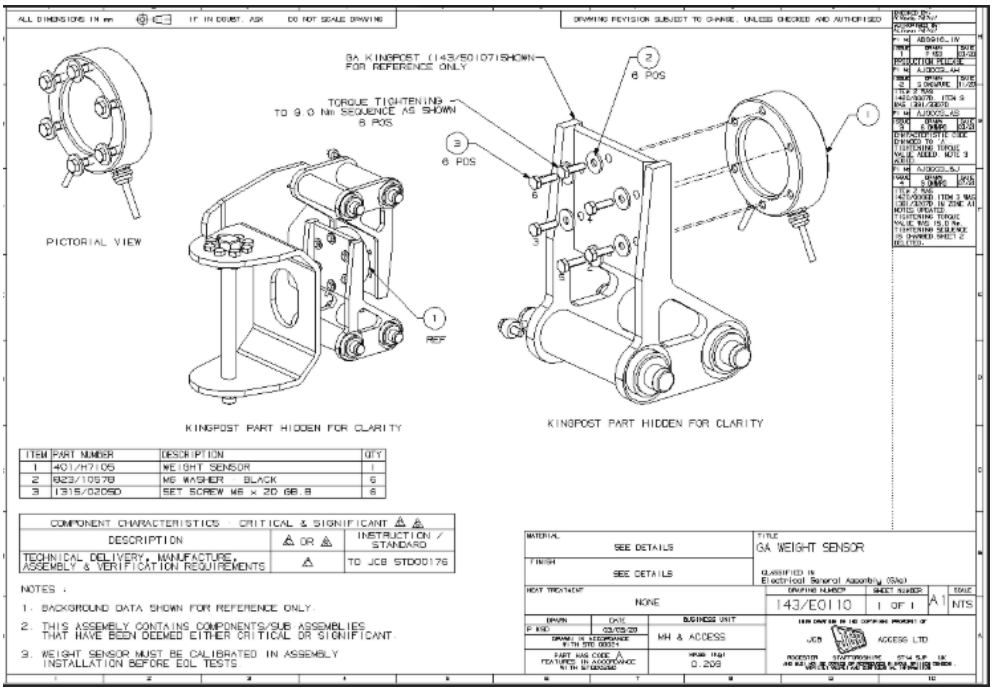 5 Check the current shown at both the channel out put it should be more then 4000 mAmp (with platform connected) 6 If any channel showing less then 4000 mAmp check the assembly tightening of weight cell, 7 If still issues persists check the load cell bracket flatness (should be within tolerance as mentioned in drawings)

© 2025 Enter your company name

	8 Check the voltage at Pin A (should read 12V) if no voltage need to investigate as per schemetic 9 If voltage is there & no out put then it might be the internal damage to components , replace the load cell
Expected Values:	
Related Fault Codes:	

Fault Code	Description
B1221-17	LOAD SENSOR 1 OOR High
B1222-16	LOAD SENSOR 1 OOR Low OR OC
B1223-17	LOAD SENSOR 2 OOR High
B1224-16	LOAD SENSOR 2 OOR Low OR OC
B1225-2F	LOAD SENSOR Data Erratic (Difference > 20%)

4.26 DC Contactor

Component :	DC Contactor
Function:	• The DC Contactor is used as a large relay to turn power on and off to the electric pump. The contactor is controlled via the bosch base ecu. • The electric pump will not work when the engine is running.
Location:	On Chassis Rear RHS
Location Image:	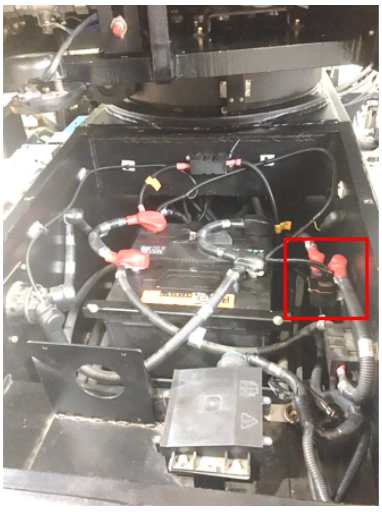 
Signal:	Contacts

Terminal	From/ To	Cable details

© 2025 Enter your company name

	<table><tr><td>Input</td><td>Battery Lead from Primary Fuse PF01</td><td>Red 50mm2 Battery cable</td></tr><tr><td>Output</td><td>To hydraulic motor Positive terminal</td><td>Red 50mm2 Battery cable</td></tr><tr><td colspan="3"></td></tr><tr><td colspan="3">Coil</td></tr><tr><td>Terminal</td><td>Description</td><td>Wire number</td></tr><tr><td>+VE</td><td>Bosch Base ECU pin 93/96</td><td>4025</td></tr><tr><td>-VE</td><td>Chassis GND terminal</td><td>6067</td></tr></table> Always be careful when fitting the coil terminals. If they are fitted the wrong way around the diode will blow across the front of the terminals and the part will not work.
Wires & Connectors:	M8-50mm ring terminals are used for contact terminals 6.3 pos-lock terminals are used on the coil terminals. Always ensure fully insulated  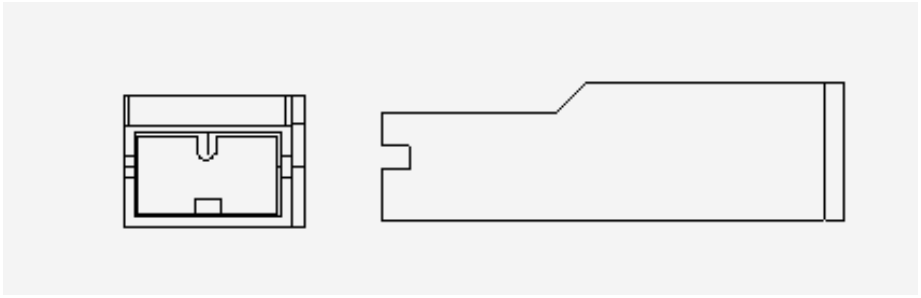

© 2025 Enter your company name

Internal Electrical Schematic:	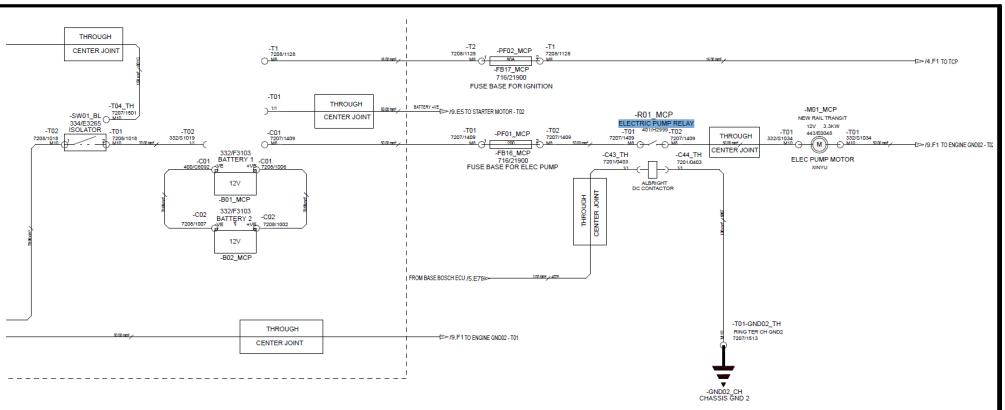
Testing:	Important: Use the multi-meter on the harness connector pins. DO NOT USE the meter on the ECU pins. 1. Set a multimeter to continuity 2. apply terminals to contact terminals of the contactor 3. This should show open circuit. 4. Apply 12V to positive coil terminal and 0V to gnd terminal 5. Check continuity across the contact terminals. with 12V and GND applied to coil there should be continuity
Expected Values:	
Related Fault Codes:	

4.27 Tilt Sensor

Component:	Tilt Sensor
Function:	• The tilt sensor is so the machine can understand the inclination of the machine. • The AJ48D tilt sensor will be open circuit when the inclination reaches >5° in the X or Y axis.
Location:	On Turntable

© 2025 Enter your company name

Location Image:



Signal:

Pin Number	Description	Wire Number
A	12V feed	1028K
B	Output Signal	4022
C	GND	6063M

Wires & Connectors:

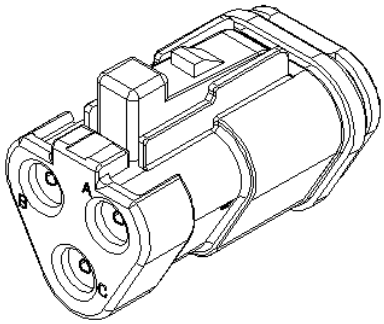

Internal Electrical Schematic:

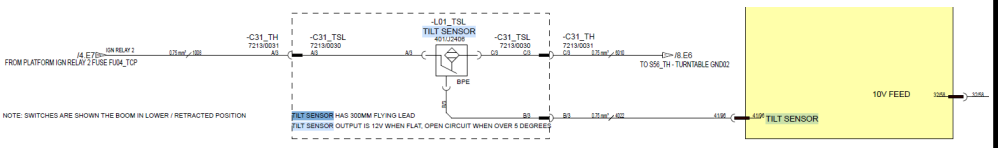

Testing:

Important: Use the multi-meter on the harness connector pins. DO NOT use the meter on the ECU pins.

1. Check the tilt angle of the chassis with a level gauge

2. Re-set tilt sensor at zero degree position. Refer to the Service Manual

3. Drive the machine 5° level & check the tilt alarm icon at display & tilt alarm LED at platform

4. If machine is stow mode it will allow all operation but if the machine is in raised mode it would not allow raise & drive operation

© 2025 Enter your company name

	5. Check the voltage at Pin A (should read 12V) if no voltage need to investigate as per schemetic 6. If voltage is there & no out put then it might be the internal damage to components , replace the tilt censor. **Calibration** 1. Ensure the machine is made safe on flat level ground in both X and Y axis. 2. Turn on machine ignition 3. Below the tilt sensor there is a red lead 4. Use lead number 400/J2673 5. Connect crocodile clip side to the battery positive 6.press the terminal into the red lead below tilt sensor for between 3 - 7 seconds and remove 7. Below the tilt sensor there will be a green light that flashes very quickly to show the calibration has been accepted.
Expected Values:	
Related Fault Codes:	<table><tr><th>Fault Code</th><th>Description</th></tr><tr><td>B1017-17</td><td>TILT Sensor SC to High (not possible to detect until sensor connec 10V)</td></tr><tr><td>B1018-16</td><td>TILT SENSOR SC to Low</td></tr></table>

4.28 Slew Limit Switch

Component:	Slew Limit Switch
Function:	• The Slew position limit sensor is to understand the slew position of the machine and operator. • As the machine is slewed round out of the forward position, the machine will pause any drive condition until the operator has pressed the slew acknowledgment switch. This is so the operator is sure of the direction that the machine will operate in.
Location:	On Turntable

© 2025 Enter your company name

Location Image:



Signal:

Pin Number	Description	Wire Number
A	10V feed	1046D
B	Input Signal	4020
C	Input Signal	4021

Wires & Connectors:

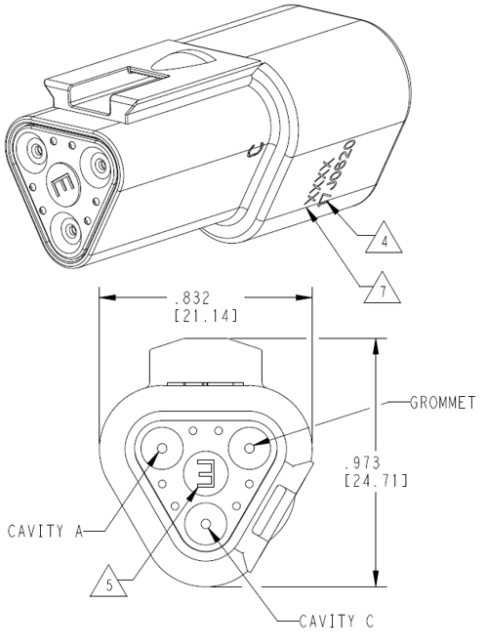

Internal Electrical Schematic:

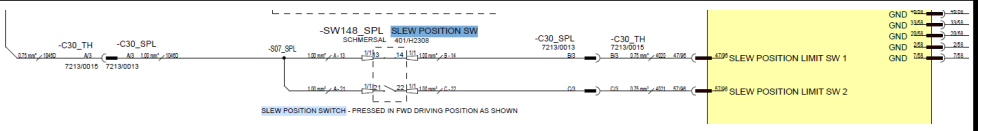

Testing: Check Continuity on contact block terminal.

Expected Values:

© 2025 Enter your company name

Related Fault Codes:	Fault Code	Description
	B1019-17	Slew Position limit switch 1 Short circuit to High
	B1020-17	Slew Position limit switch 2 Short circuit to High
	B1021-16	Slew Position limit switch 1 Short circuit to low
	B1022-13	Slew Position limit switch 1 and slew position limit switch 2 open
	B1023-16	Slew Position limit switch 2 short circuit to low
	B1024-92	Slew Position limit switch 1 and slew position limit switch 2 short

4.29 Main Valve Block

Component:	Main Valve Block
Function:	The main valve block is used to control the hydraulic flow around the machine.
Location:	On Turntable near Fuel Tank
Location Image:	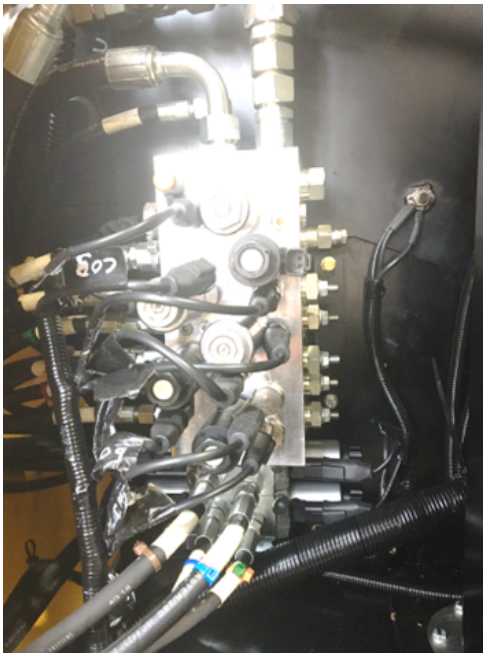

Signal:

C01_TH Articboom lower

Pin Number	Description	Wire Harness Numbers	Pin Number on ECU
1	Artic boom lower	4043	77/96
2	Shared low side with Artic boom raise	4044B	89/96

© 2025 Enter your company name

C02_TH Articboom raise			
Pin Number	**Description**	**Wire Harness Numbers**	**Pin Number on ECU**
1	Artic boom raise	4042	53/96
2	Shared low side with Artic boom lower	4044B	89/96

C03_TH Main boom Telescopic Retract			
Pin Number	**Description**	**Wire Harness Numbers**	**Pin Number on ECU**
1	telescopic retract	4049	75/96
2	Shared low side with telescopic extend	4050B	85/96

C04_TH Main boom telescopic Extend			
Pin Number	**Description**	**Wire Harness Numbers**	**Pin Number on ECU**
1	telescopic extend	4043	51/96
2	Shared low side with telescopic retract	4044C	85/96

C05_TH Main boom raise			
Pin Number	**Description**	**Wire Harness Numbers**	**Pin Number on ECU**
1	main boom lower	4045	54/96
2	Shared low side with main boom raise	4047A	84/96

C06_TH Main boom lower			
Pin Number	**Description**	**Wire Harness Numbers**	**Pin Number on ECU**
1	main boom lower	4043	78/96
2	Shared low side with main boom raise	4047A	84/96

C07_TH Slew left proportional			
Pin Number	**Description**	**Wire Harness Numbers**	**Pin Number on ECU**
1	Steer left	4054	7396

© 2025 Enter your company name

2	Shared low side with right proportional	4056C	87/96

C08_TH Slew right proportional

Pin Number	Description	Wire Harness Numbers	Pin Number on ECU
1	Steer left	4055	49/96
2	Shared low side with left proportional	4056B	87/96

C09_TH Steer Left

Pin Number	Description	Wire Harness Numbers	Pin Number on ECU
1	Steer left	4051	7496
2	Shared low side with Steer right	4053C	80/96

C10_TH Steer Right

Pin Number	Description	Wire Harness Numbers	Pin Number on ECU
1	Steer right	4052	50/96
2	Shared low side with Steer left	4053B	80/96

C11_TH Public proportional

Pin Number	Description	Wire Harness Numbers	Pin Number on ECU
1	High Side	4057	30/96
2	Lowside	4058	81/96

C13_TH Lift & Slew flow valve

Pin Number	Description	Wire Harness Numbers	Pin Number on ECU
1	lift and slew flow	4062	Jan-96
2	GND	6064L	GND

C14_TH Platform level raise

Pin Number	Description	Wire Harness Numbers	Pin Number on ECU
1	Level Raise	4059	Mar-96

© 2025 Enter your company name

2	GND	6064P	GND
C15_TH Platform level lower			
Pin Number	**Description**	**Wire Harness Numbers**	**Pin Number on ECU**
1	Level lower	4060	57/58
2	GND	6064N	GND
C16_TH Platform rotate/jib flow valve			
Pin Number	**Description**	**Wire Harness Numbers**	**Pin Number on ECU**
1	Platform flow valve	4061	Jul-96
2	GND	6064M	GND

Wires & Connectors:

The image below shows a Deutsch 2 way connector. This is used for each solenoid on the valve block.

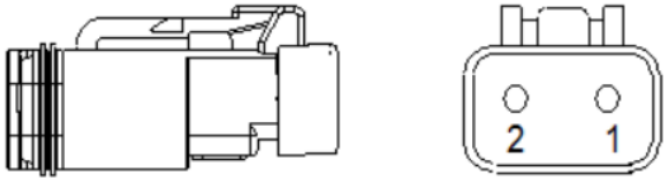

© 2025 Enter your company name

Internal Electrical Schematic:	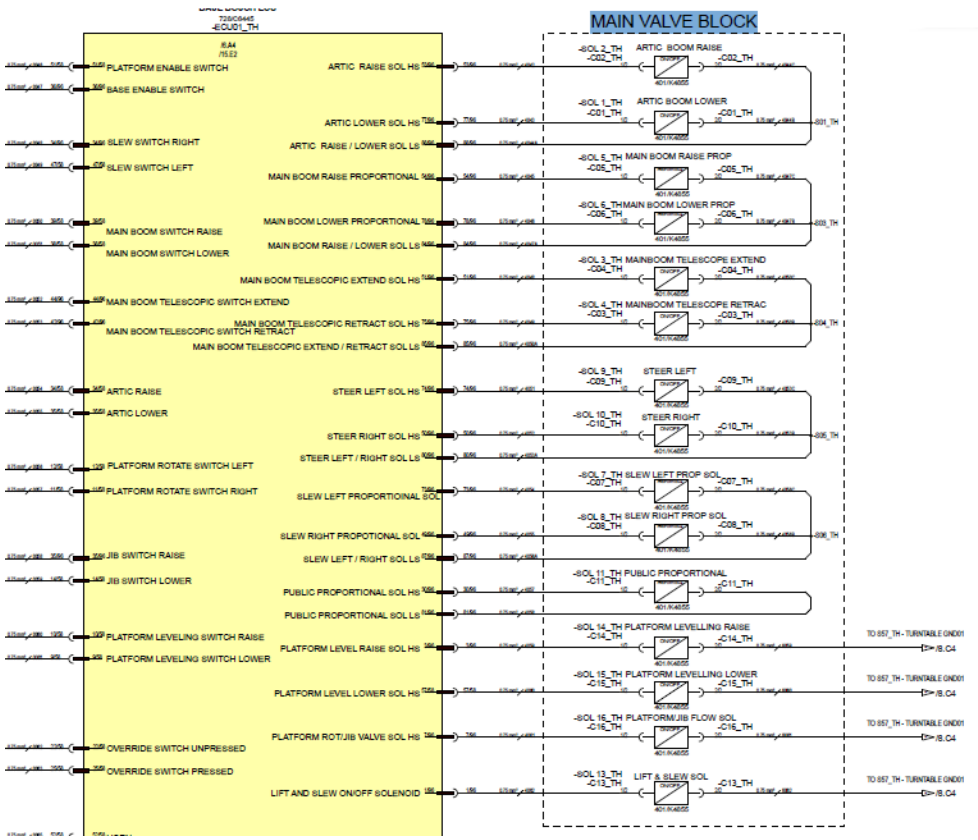
Testing:	Important: Use the multi-meter on the harness connector pins. DO NOT USE the meter on the ECU pins. 1. Using a solenoid pen, check to see if the solenoid is powered when the function is in use. 2. If the solenoid pen shows no power, disconnect the harness from the solenoid. 3. Check the resistance across the solenoid. The reading should as per specification as mentioned in below table 4. If readings are incorrect, replace the solenoid. If correct disconnect the harness at the ECU and check harness continuity, repair/replace if necessary 5. If the harness continuity is OK, replace the solenoid.

© 2025 Enter your company name

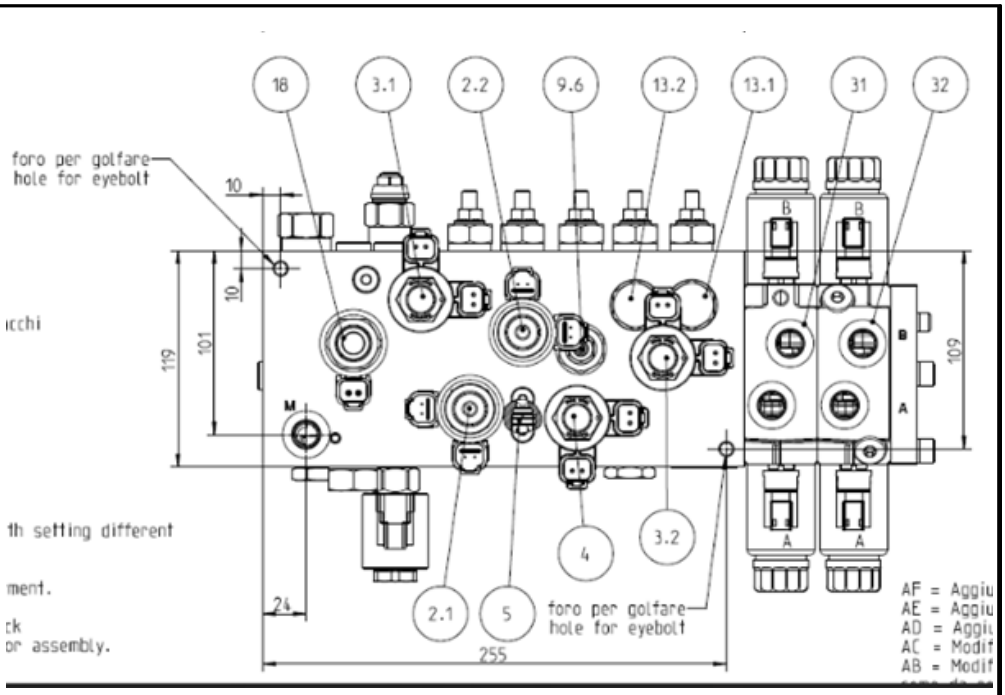

"ETICHETTA NP169"

ELECTRICAL CHARACTERISTICS COIL POS: 31 - 32	
Connections	DEUTSCH DT 04-2PA
Voltage	12V ±15%
Coils Protection	IP69K
Insulation Class of Coil	H 180°C (356°F)
Current	Imax 1760 mA
Resistance at 20°C (68°F)	3.71 Ohm ±7%

ELECTRICAL CHARACTERISTICS COIL POS: 18	
Connections	DEUTSCH DT 04-2PA
Voltage	12V ±15%
Coils Protection	IP69K
Insulation Class of Coil	H 180°C (356°F)
Ambient temperature range	-40°C / +110°C (-40°F / +230 °F)
Current	Imax 1760 mA
Resistance at 20°C (68°F)	2.3 Ohm ±5%

ELECTRICAL CHARACTERISTICS COIL POS NO: 2.1 - 2.2	
Connections	DT04-2PA DEUTSCH
Voltage	12V ±10%
Coils Protection	IP69K
Circuit	Standard
Insulation Class of Coil	H 180°C (356°F)
Ambient temperature range	-40°C / +110°C (-40°F / +230 °F)
Power	22 W
Resistance at 20°C (68°F)	6.4 Ohm ±5%

© 2025 Enter your company name

Expected Values:	
Related Fault Codes:	

Fault Code	Description
B1036-17	Public proportional output solenoid valve short circuit to high (>10.5V)
B1037-16	Public proportional output solenoid valve short circuit to low
B1038-13	Public proportional output solenoid valve open circuit
B1039-17	Platform leveling raise output solenoid valve HS open circuit or short to high at machine start up
B1040-16	Platform leveling raise output solenoid valve HS short circuit to low
B1041-17	Platform leveling lower output solenoid high side open circuit or short to high on start up
B1042-16	Platform leveling lower output solenoid high side is short circuit to low
B1076-17	Main boom raise proportional output solenoid is short circuit to high at the base control station
B1077-16	Main boom raise and lower proportional output solenoids at the base control station are short circuit to low
B1078-13	Main boom raise and lower proportional output solenoids are open circuit
B1079-17	Main boom lower proportional output solenoid short circuit to high
B1080-17	Slew right proportional output solenoid short circuit to high
B1081-16	Slew right and left proportional output solenoids short circuit to low
B1082-13	Slew right and left proportional output solenoids open circuit
B1083-17	Slew left proportional output solenoid short circuit to high
B1084-17	Main boom extend output solenoid is short circuit to high
B1085-16	Main boom extend and retract output solenoid short circuit to low
B1086-13	Main boom extend or retract output solenoid open circuit
B1087-17	Main boom retract output solenoid short circuit to high
B1088-17	Steer right directional output solenoid short circuit to high
B1089-16	Steer left or right directional output solenoid short circuit to low
B1090-13	Steer left or right directional output solenoid open circuit
B1091-17	Steer left directional output solenoid short circuit to high

4.30 Brake Valve Block

Component:	Brake Valve Block

© 2025 Enter your company name

Function:

- This valve is necessary for optimizing front-to-rear bias, also referred to as brake balance. It is a spring-loaded component that activates when fluid pressure builds when you step on the brake pedal.
- Once this happens, the spring gets compressed and the plunger blocks the fluid from passing through.

Location: On Chassis Front side RHS

Location Image:



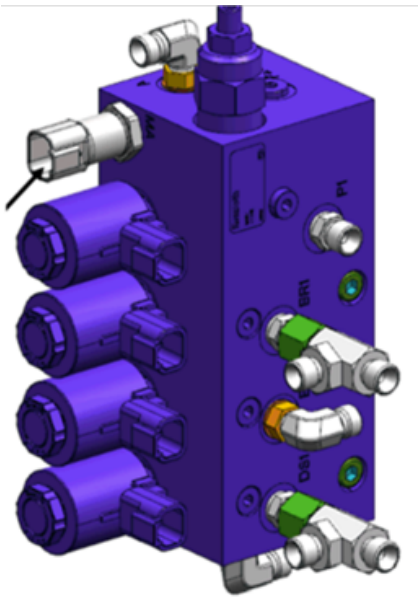

Signal:

AXLE LOCK:

Pin Number	Description	Wire Numbers
1	AXLE LOCK SOL HS	4037
2	AXLE LOCK SOL LS	4038

REAR BRAKE SOL:

Pin Number	Description	Wire Numbers
1	REAR BRAKE SOLENOID	4039
2	GND	6039

FRONT BRAKE SOL:

Pin Number	Description	Wire Numbers
1	FRONT BRAKE SOLENOID	4063
2	GND	6063

HIGH TORQUE SOL:

© 2025 Enter your company name

Pin Number	Description	Wire Numbers
1	HIGH TORQUE SOLENOID	4040
2	GND	6040

HYDRAULIC GENERATOR 1:

Pin Number	Description	Wire Numbers
1	HYDRAULIC GENERATOR SOLENOID HS	4041
2	GND	6041

Wires & Connectors:

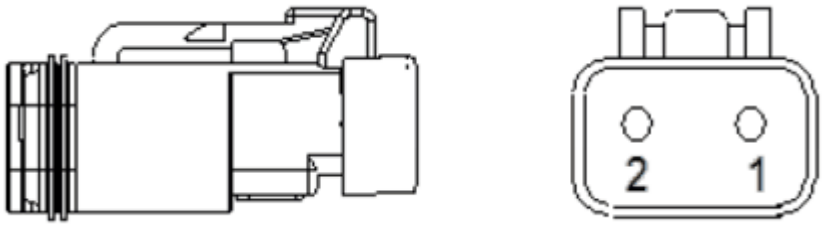

Internal Electrical Schematic:

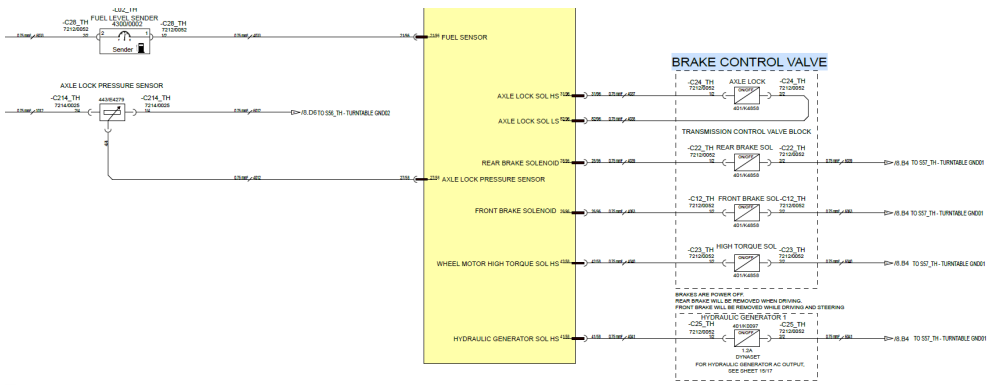

Testing:

Important: Use the multi-meter on the harness connector pins. DO NOT USE the meter on the ECU pins.

1. Using a solenoid pen, check to see if the solenoid is powered when the function is in use.

2. If the solenoid pen shows no power, disconnect the harness from the solenoid.

3. Check the resistance across the solenoid. The reading should as per specification as mentioned in below table

4. If readings are incorrect, replace the solenoid. If correct disconnect the harness at the ECU and check harness continuity, repair/replace if necessary

© 2025 Enter your company name

	5. If the harness continuity is OK, replace the solenoid. ELECTRICAL CHARACTERISTICS COIL POS NO: 3.1 - 3.2 - 4 - 30 Connections: DEUTSCH DT04-2P-V Voltage: 12V +25%-10% at 60°C (140°F) Coils Protection: IP69K Circuit: Bidirectional Diode Insulation Class of Coil: H 180°C (356°F) Ambient temperature range: -90°C / +90°C (-22°F / +194 °F) Current: Max 1.67 A - Norm 1.04 A Power: 20 W Resistance at 20°C (68°F): 7.4 Ohm ±7%
Expected Values:	
Related Fault Codes:	**Fault Code** / **Description** B1043-17 — Oscillating Axle solenoid short circuit to high B1044-16 — Oscillating Axle solenoid short circuit to low B1045-13 — Oscillating Axle solenoid open circuit B1046-17 — High Torque solenoid valve short circuit to high or open circuit B1047-16 — High Torque solenoid valve short circuit to low B1048-17 — Front brake solenoid valve open circuit or short to high B1049-16 — Front brake solenoid valve short circuit to low

4.31 Electric Pump

Component:	Electric Pump
Function:	Electric pump is used in case of emergency to get the basket down when the primary supply (Engine) fails.
Location:	On Turntable rear side

© 2025 Enter your company name

Location Image:

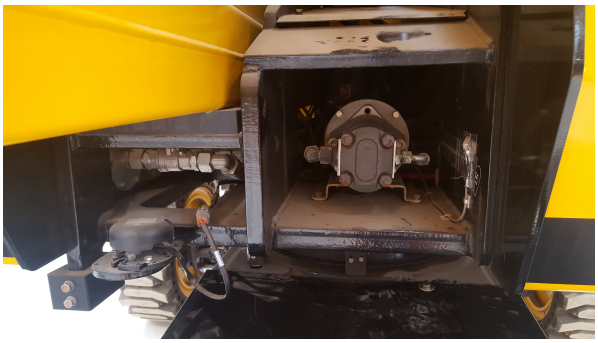

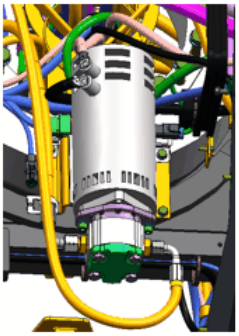

Signal:

Pin	Battery Cable Connected to
+VE	Red
-VE	Black

Wires & Connectors:

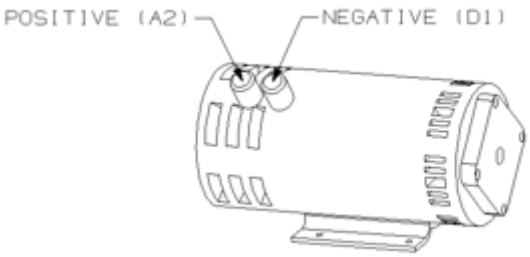

Internal Electrical Schematic:

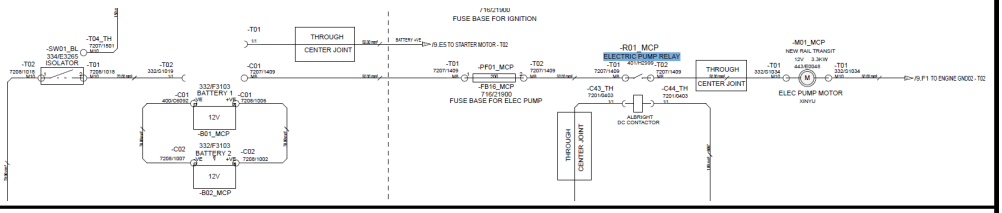

Testing:

Important: Use the multi-meter on the harness connector pins. DO NOT USE the meter on the ECU pins.

1. There is a 3.3KW DC motor fitted inside turntable.
2. Check the terminal properly connected at motor . Red (positive) cable should be connected at A2 & Black (negative) cable should be connected at B1
3. Visually inspect the motor winding, bushes & commutator
4. Check the voltage at DC contactor power contacts. This should read 12V
5. If there is no 12V then check DC contactor coil supply & investigate wiring as schematic
6. If there is 12V supply then there may be internal damage to motor , replace it.

© 2025 Enter your company name

Expected Values:	
Related Fault Codes:	<table><tr><th>Fault Code</th><th>Description</th></tr><tr><td>B1055-17</td><td>ELECTRIC PUMP BUTTON SC to High</td></tr><tr><td>B1056-16</td><td>ELECTRIC PUMP BUTTON SC to Low</td></tr></table>

4.32 Hydraulic Generator

Component:	Hydraulic Generator
Function:	• The hydraulic generator is to provide power to the platform. • There will be different variants of the same generator based on country and supply voltage. 1. 110V USA Supply 2. 230V ROW Supply
Location:	On Chassis LHS

© 2025 Enter your company name

Location Image:



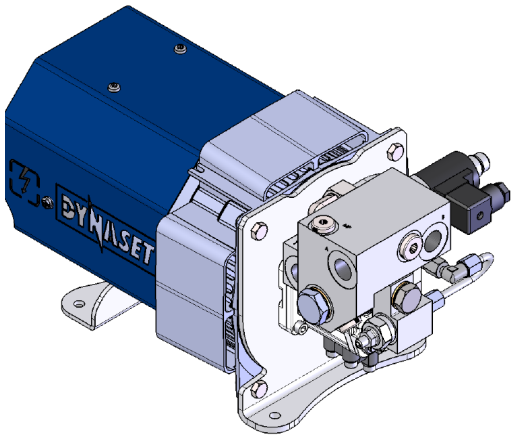

Signal:

Pin Number	Description	Wire Number
1	ECU +ve Feed	4041
2	GND	6064C

Wires & Connectors:

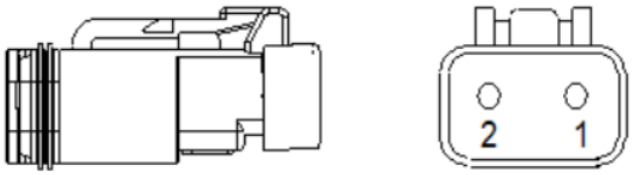

© 2025 Enter your company name

Internal Electrical Schematic:

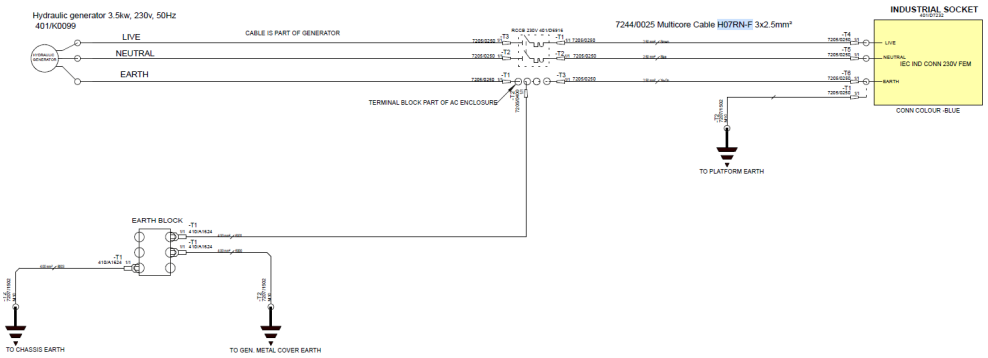

Testing:

It is recommended to check the condition of the hydraulic alternator at least once a month.

Make a note of the following:

- The alternator safety device can only be tested when the hydraulic alternator is on.
- When the test button is pressed the switch must be released immediately.
- Do not use the hydraulic alternator with faulty safety equipment.
- If a fault condition trips the safety device, the fault has to be cleared before the switch can be set back up.
- Do not bypass or remove the safety device to clear the problem.

1. Push the test button to check the functionality of the device. If everything is in order, the switch releases.
2. Switch the reset switch back up to put the hydraulic alternator operational.

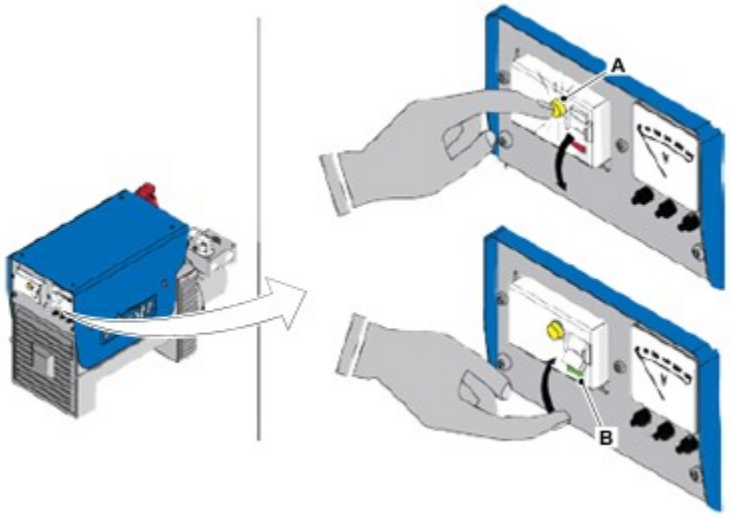

A	Test button
B	Reset switch

© 2025 Enter your company name

Expected Values:	
Related Fault Codes:	

Fault Code	Description
B1355-16	HYDRAULIC GENERATOR Valve SC to Low (TCP)
B1356-13	HYDRAULIC GENERATOR Valve HS SC to High or OC (TCP)
B1215-17	HYDRAULIC GENERATOR BUTTON SC to High (PCP)
B1216-16	HYDRAULIC GENERATOR BUTTON SC to Low (PCP)

4.33 AC Connector

Component:	AC Connector
Function:	The GFCI is the power outlet 110V AC Supply it is fitted on Platform of the machine when Hydraulic generator option is used.
Location:	In Platform near Manual Box
Location Image:	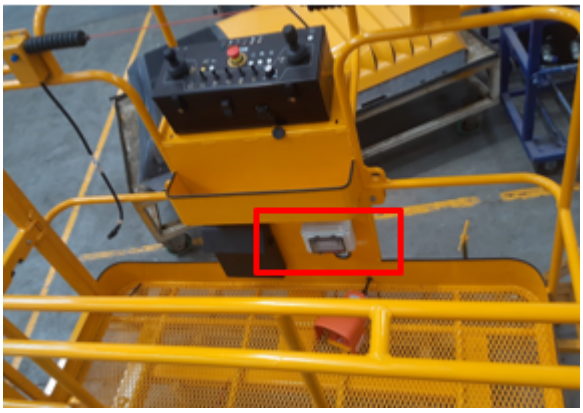 

© 2025 Enter your company name

Signal:

Pin Number	Description	Wire Number
T4 (Terminal)	Line	2.5mm2 Brown
T5 (Terminal)	Neutral	2.5mm2 Blue
T6 (Terminal)	Earth	2.5mm2 YE-GN
T7 (Terminal)	GND	6004

Wires & Connectors:





Internal Electrical Schematic:

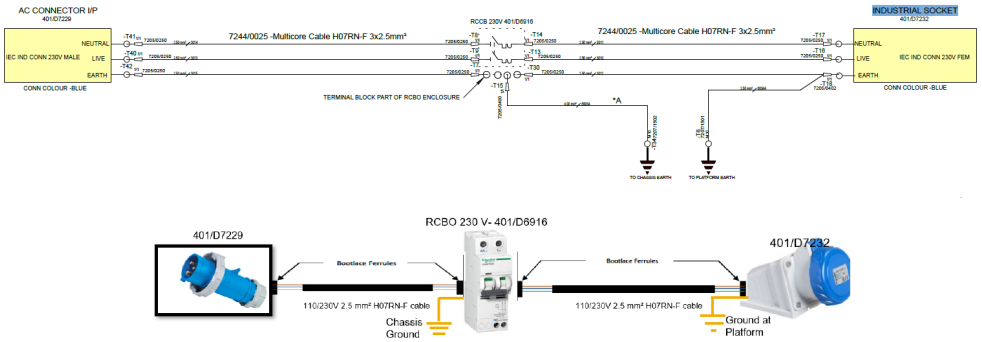

Testing:

Important: Use the multi-meter on the harness connector pins. DO NOT USE the meter on the ECU pins

1.Visually inspect the connectors should not be broken

2.Check for the live neutral and earth connection it should be correctly fitted

3.Check for the continuity as per the PAT guide for live earth and neutral

Expected Values:

Related Fault

© 2025 Enter your company name

Codes:	

4.34 Diagnostic Connector

Component:	Diagnostic Connector
Function:	• The diagnostic connectors are to allow for a laptop connection to the machine.There are 2 connectors and they both have the same access to the machine but in 2 locations to assist various tasks. • The base connection also has a second CAN installed that is for the engine.
Location:	One available on Base Control and One available in Platform Control box.
Location Image:	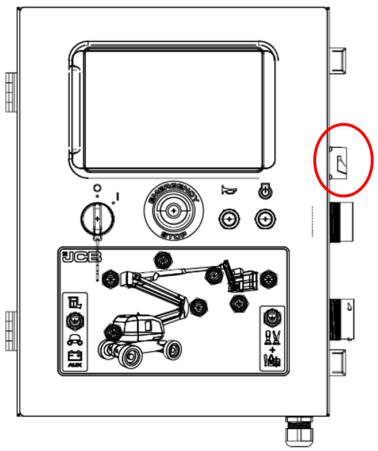 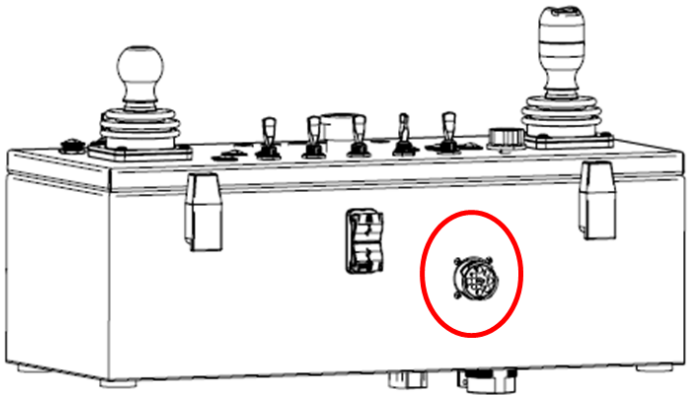

Signal:

Pin Number	Description	Wire Number/ Colour
A	GND	6063T

© 2025 Enter your company name

	B	12V	1016
	C	CAN H	Yellow
	D	CAN L	Green
	E	Shield	Bare Shield
	F	NOT IN USE	NOT IN USE
	G	NOT IN USE	NOT IN USE
	H	15765 CAN H (Only in base connection)	Yellow
	J	15765 CAN L (Only in base connection)	Green

Wires & Connectors:

7219/0040 Diagnostic Connector

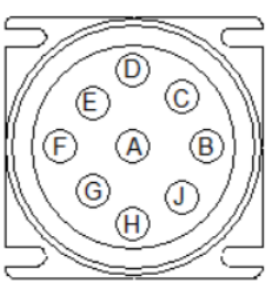

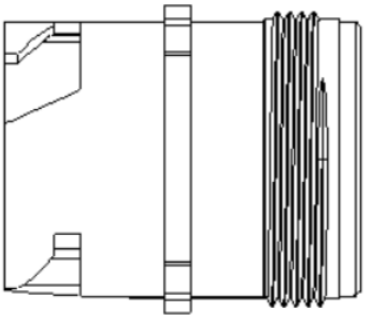

Internal Electrical Schematic:

Base Diagnostic

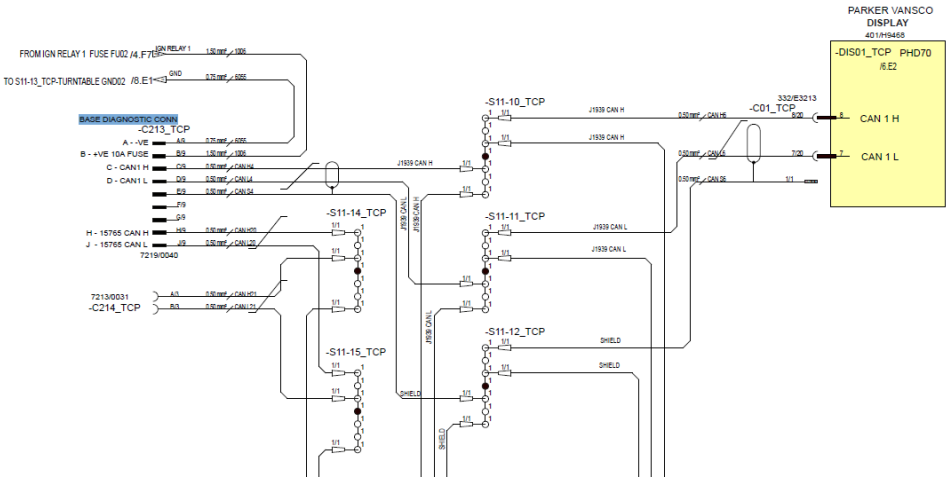

Platform Diagnostic

© 2025 Enter your company name

	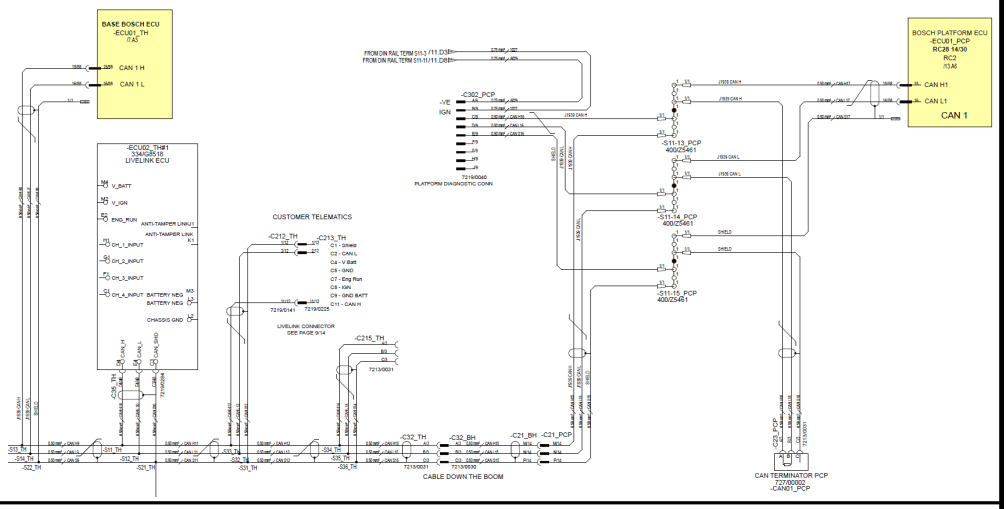
Testing:	Important: Use the multi-meter on the harness connector pins. DO NOT USE the meter on the ECU pins 1. Ensure the machine is switched off. 2. Measure CAN1 resistance between pin 'C' and 'D 3. This should read 60 ohms. 4. If this isn't the case the DLA connector is faulty.
Expected Values:	
Related Fault Codes:	

4.35 Customer Telematics

Component:	Customer Telematics
Function:	• Customer Telematics connector is a point that customers can connect up there own Telematics system. • This is done by some of the large rental fleets that do not use JCB Livelink and have their own solution in place.
Location:	The Telematics ecu is mounted on the rear of the base control panel box the plug should just be visible from the top of the control panel.

© 2025 Enter your company name

Location Image:



Signal:

PIN NUMBER	DESCRIPTION	WIRE NUMBER
1	SHIELD	BARE
2	CAN L	GREEN
3		
4	V-BATT	3002C
5	GND	6022DD
6		
7	ALTERNATOR RUN SIGNAL	1032D
8	IGNITION	0040D
9	GND BATT	6022C
10	GND POWER	6063G
11	CAN H	YELLOW
12		

Wires & Connectors:

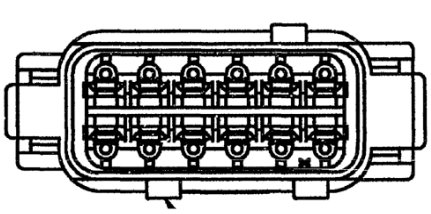

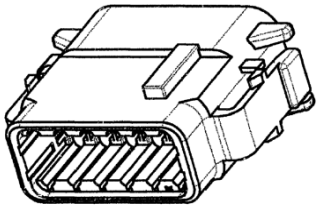

© 2025 Enter your company name

Internal Electrical Schematic:

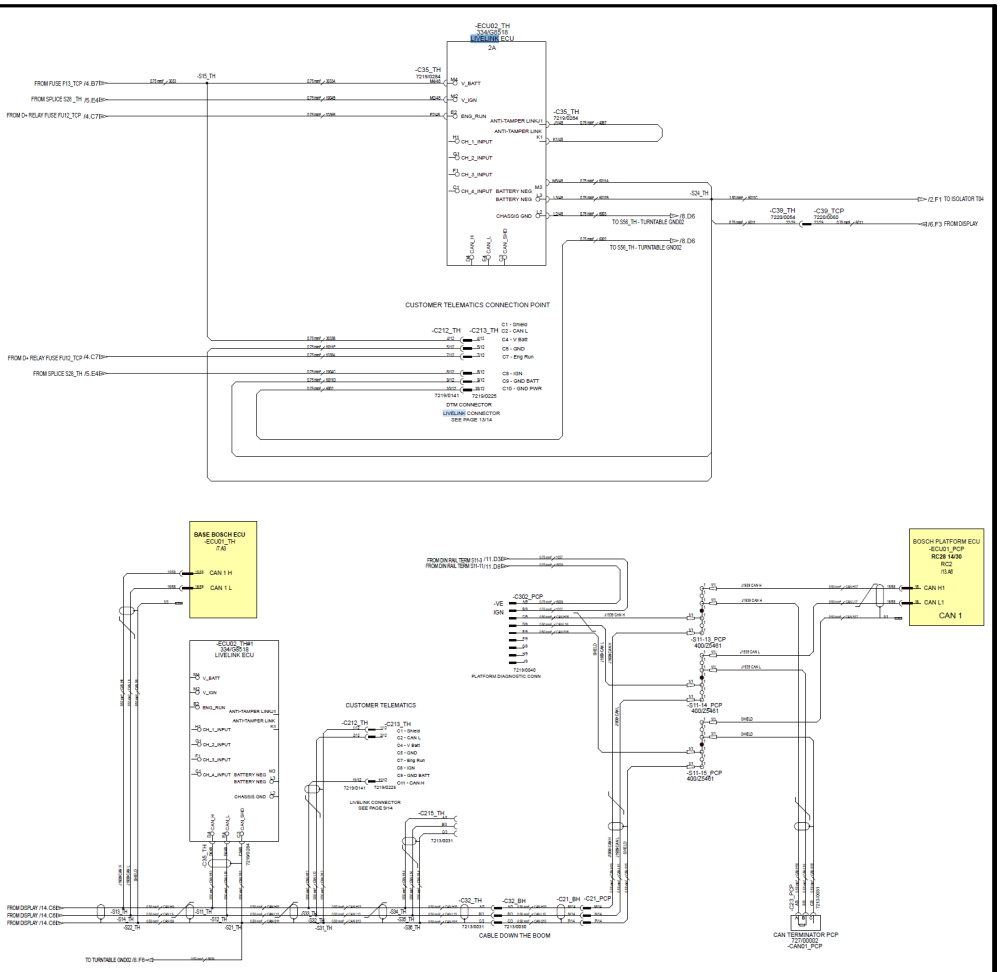

Testing:

Refer existing Live Link ECU help file for testing procedure

Expected Values:

Related Fault Codes:

Fault Code	Description
U1900-16	Livelink - Vehicle Battery Voltage Below Normal
U1901-16	Livelink - Internal Voltage Below Normal
U1902-18	Livelink - Telematics Output for Relay 0 Current Below Normal or Ope
U1903-18	Livelink - Telematics Output for Relay 1 Current Below Normal or Ope
U1904-85	Livelink - ECU Above Temperature Threshold
U1905-84	Livelink - ECU Below Temperature Threshold
U1906-96	Livelink - Accelerometer Internal Failure
U1907-09	Livelink - Modem Jammed
U1908-09	Livelink - GPS Antenna Not OK
U1909-96	Livelink - No Comms with GPS Module
U190A-09	Livelink - SIM Card Failure

© 2025 Enter your company name

	U190B-96	Livelink - No Comms with GSM Module
	U190C-86	Livelink - GSM Network Registration Failure
	U190D-06	Livelink - Anti Tamper Lockout

4.36 LiveLink ECU

Component :	Livelink ECU
Function:	The Live-link ECU is used for remote monitoring of machine operation, location, health and critical parameters.
Location:	The Livelink ecu is mounted on the rear of the base control panel box the plug should just be visible from the top of the control panel.
Location Image:	

Signal:

12 WAY DTM FEM KEY C HSG		
PIN NUMBER	**DESCRIPTION**	**WIRE NUMBER**
M4	V_Batt	3033A
M2	V_IGN	1904B
E2	ENG _RUN	1036B
H1	CH1_INPUT	-
G1	CH2_INPUT	-
F1	CH3_INPUT	-
C1	CH4_INPUT	1036A
D4	IGN	1904C
E4	CAN_L	6011D
C3	CAN_SHD	6002

© 2025 Enter your company name

	L2 CHASSIS GND CANH12 L3 BATT_NEG 6011B M3 BATT_NEG 6011A K1 ANTI_TAMPER LINK 4067 J1 ANTI_TAMPER LINK 4067
Wires & Connectors:	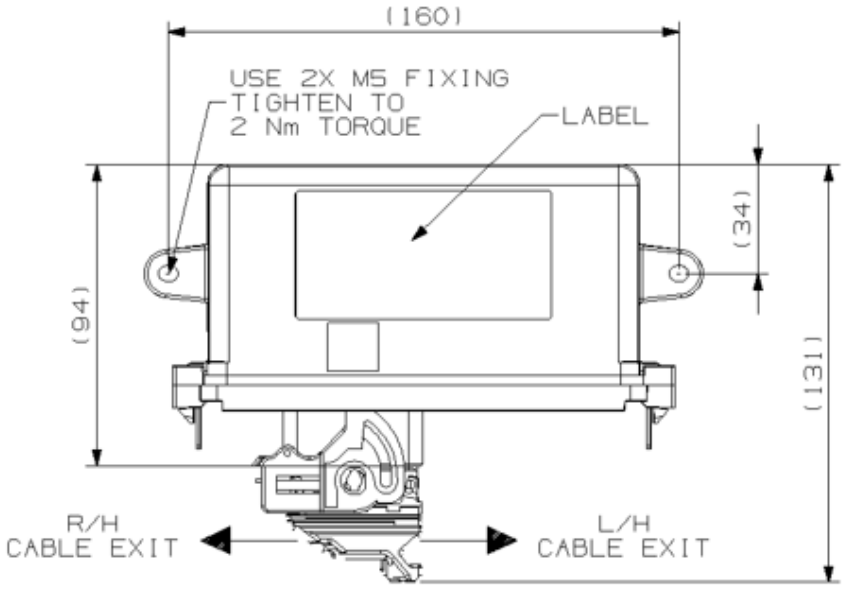
Internal Electrical Schematic:	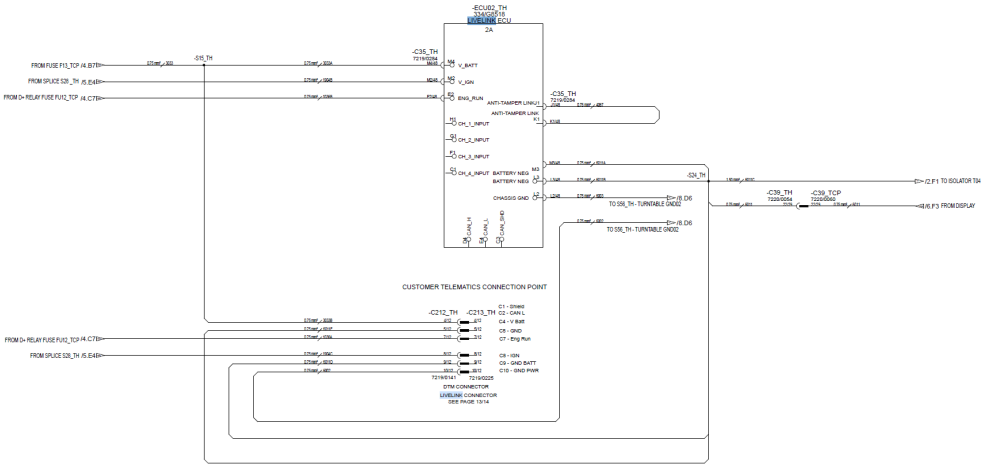

© 2025 Enter your company name

	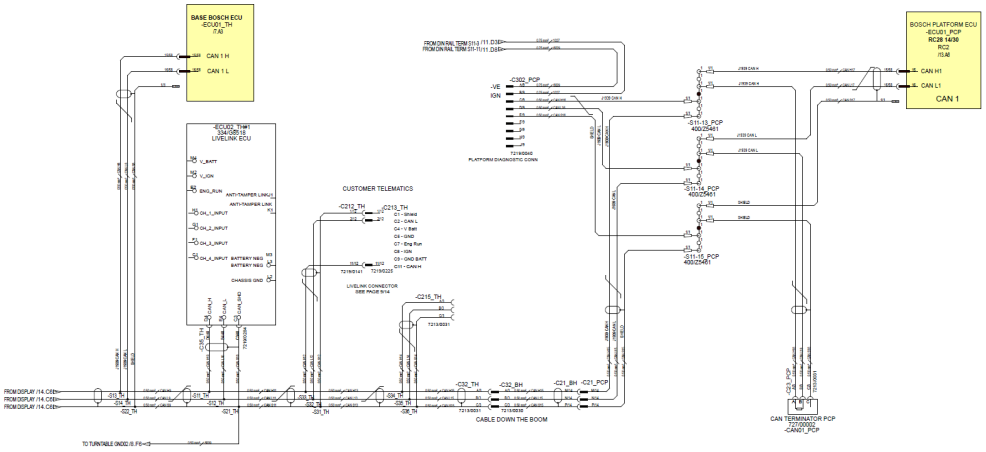
Testing:	Refer existing Live Link ECU help file for testing procedure.
Expected Values:	
Related Fault Codes:	

Fault Code	Description
U1900-16	LiveLink - Vehicle Battery Voltage Below Normal
U1901-16	LiveLink - Internal Voltage Below Normal
U1902-18	LiveLink - Telematics Output for Relay 0 Current Below Normal or Open Circuit
U1903-18	LiveLink - Telematics Output for Relay 1 Current Below Normal or Open Circuit
U1904-85	LiveLink - ECU Above Temperature Threshold
U1905-84	LiveLink - ECU Below Temperature Threshold
U1906-96	LiveLink - Accelerometer Internal Failure
U1907-09	LiveLink - Modem Jammed
U1908-09	LiveLink - GPS Antenna Not OK
U1909-96	LiveLink - No Comms with GPS Module
U190A-09	LiveLink - SIM Card Failure
U190B-96	LiveLink - No Comms with GSM Module
U190C-86	LiveLink - GSM Network Registration Failure
U190D-06	LiveLink - Anti Tamper Lockout

4.37 Base Bosch ECU

Component:	Base Bosch ECU
Function:	• When the ECU turns on, there is a check in the Bosch software to ensure the ECU is in a safe state to turn on and enable.

© 2025 Enter your company name

<table>
<tr><td></td><td>

- After the Bosch boot block check there should be a check in the software to check for status of inputs to ensure the software is in a safe condition before allowing all functions.
- The base Bosch ECU perform all the functions of machine.

</td></tr>
<tr><td>Location:</td><td>On Chassis near Hydraulic Tank</td></tr>
<tr><td>Location Image:</td><td> 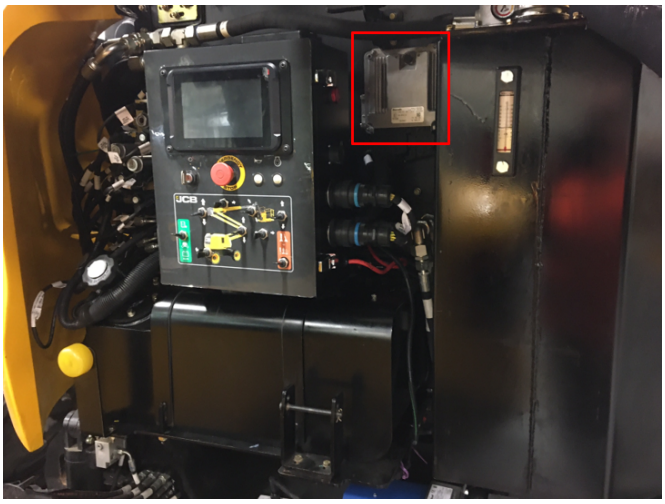
 </td></tr>
<tr><td>Signal:</td><td>
58 Way connector
<table>
<tr><th>Pin Number</th><th>Description/ Signal</th><th>Wire Number</th></tr>
<tr><td>1</td><td>Power Supply - 12V</td><td>1023C</td></tr>
<tr><td>2</td><td>GND</td><td>6060M</td></tr>
<tr><td>3</td><td>Power Supply - 12V</td><td>1023D</td></tr>
<tr><td>4</td><td>Power Supply - 12V</td><td>1023E</td></tr>
<tr><td>5</td><td>Power Supply - 12V</td><td>1018C</td></tr>
<tr><td>6</td><td>Power Supply - 12V</td><td>1018G</td></tr>
<tr><td>7</td><td>GND</td><td>6060L</td></tr>
<tr><td>8</td><td>NOT USED</td><td>NOT USED</td></tr>
</table>
</td></tr>
</table>

© 2025 Enter your company name

9	Platform leveling Switch input - Lower (10V when pressed)	61
10	Platform leveling Switch input - Raised (10V when pressed)	60
11	Platform rotate switch input - right (10V when pressed)	57
12	Platform rotate switch input - left (10V when pressed)	56
13	NOT USED	NOT USED
14	Jib Switch input - Lower (10V when pressed)	59
15	CAN H1 (yellow)	yellow
16	CAN L1 (Green)	green
17	NOT USED	NOT USED
18	NOT USED	NOT USED
19	NOT USED	NOT USED
20	GND	6060N
21	NOT USED	NOT USED
22	Override switch unpressed (10V when not pressed)	62
23	NOT USED	NOT USED
24	Boom rest switch input 2	4011
25	Override switch pressed (10V when pressed)	63
26	NOT USED	NOT USED
27	Axle lock pressure sensor (0.5-4.5)	4034
28	E-stop positive (12V when unpressed)	41
29	NOT USED	NOT USED
30	NOT USED	NOT USED
31	NOT USED	NOT USED
32	10V output from ECU	1030C
33	GND	6060P
34	Artic boom input switch - raise (10V when pressed)	54
35	Artic boom input switch - lower (10V when pressed)	55
36	NOT USED	NOT USED
37	NOT USED	NOT USED
38	main boom switch input - lower (10V when pressed)	51
39	main boom switch input - raise (10V when pressed)	50
40	ignition switch input (12V)	0040B
41	Hydraulic generator solenoid output (12V)	4041

© 2025 Enter your company name

42	high torque solenoid output (12V)	4040
43	beacon output (12V)	4032
44	horn relay output (12V)	4035
45	power electronics input (12V)	1029C
46	GND	6060R
47	slew switch input - left (10V when pressed)	49
48	NOT USED	NOT USED
49	RC Config 2 (GND)	6060K
50	Engine start switch input (10V when pressed, momentary)	66
51	Platform enable switch (10V when switch at platform)	46
52	Horn input switch (10V when pressed, momentary)	65
53	NOT USED	NOT USED
54	NOT USED	NOT USED
55	NOT USED	NOT USED
56	White noise alarm output	4036C
57	Platform level lower solenoid output	4060
58	Power electronics supply (12V)	1029B

96 Way connector

Pin Number	Description/ Signal	Wire Number
1	Lift & slew on/off solenoid output	4062
2	NOT USED	NOT USED
3	Platform level solenoid output - Raise	4059
4	NOT USED	NOT USED
5	NOT USED	NOT USED
6	NOT USED	NOT USED
7	Platform rotate/ Jib flow solenoid	4061
8	NOT USED	NOT USED
9	NOT USED	NOT USED
10	NOT USED	NOT USED
11	NOT USED	NOT USED
12	NOT USED	NOT USED
13	NOT USED	NOT USED
14	E-Stop -ve (GND when unpressed)	42
15	NOT USED	NOT USED
16	NOT USED	NOT USED
17	NOT USED	NOT USED

© 2025 Enter your company name

18	Blocked air filter signal (GND when blocked)	4023
19	NOT USED	NOT USED
20	NOT USED	NOT USED
21	NOT USED	NOT USED
22	GND	6060C
23	GND	6060D
24	GND	6060G
25	NOT USED	NOT USED
26	Front brake solenoid output	26/96
27	NOT USED	NOT USED
28	Rear brake solenoid output	4039
29	NOT USED	NOT USED
30	Public proportional solenoid output Highside	4057
31	Axle lock solenoid output Highside	4037
32	NOT USED	NOT USED
33	NOT USED	NOT USED
34	Slew switch input - right (10V when pressed)	48
35	Jib Switch input - raise (10V when pressed)	58
36	Base enable switch (10V when pressed)	47
37	Boom Rest Input switch 1	4009
38	NOT USED	NOT USED
39	Fuel sender input (resistance to gnd)	39/96
40	NOT USED	NOT USED
41	Tilt sensor input	4022
42	main boom telescope input switch - retract	53
43	NOT USED	NOT USED
44	main boom telescope input switch - extend	52
45	GND	6060H
46	GND	6060J
47	Slew position switch input switch 1	4020
48	main boom telescope limit switch input sw1	4105
49	Slew right proportional output solenoid	4055
50	Steer right solenoid highside output	4052
51	main boom telescope extend solenoid output	4048
52	forward drive solenoid output highside	4064
53	Artic boom raise highside output	4042
54	main boom raise solenoid output	4045
55	NOT USED	NOT USED
56	NOT USED	NOT USED
57	Slew position limit switch input sw2	4021

© 2025 Enter your company name

58	Engine alternator input signal	1032B
59	main boom telescope retract limit sw2	4106
60	NOT USED	NOT USED
61	NOT USED	NOT USED
62	NOT USED	NOT USED
63	NOT USED	NOT USED
64	NOT USED	NOT USED
65	NOT USED	NOT USED
66	NOT USED	NOT USED
67	NOT USED	NOT USED
68	NOT USED	NOT USED
69	NOT USED	NOT USED
70	NOT USED	NOT USED
71	NOT USED	NOT USED
72	NOT USED	NOT USED
73	slew left proportional solenoid highside	4054
74	Steer left highside output	4051
75	main boom telescope retract hs output	4049
76	reverse highside solenoid output	4065
77	Articboom lower highside output	4043
78	main boom lower proportional highside output	4046
79	NOT USED	NOT USED
80	Steer left/right lowside	4053A
81	Public proportional Lowside	4058
82	Axle lock solenoid lowside	4038
83	NOT USED	NOT USED
84	main boom raise/lower lowside	4047A
85	Main boom telescope output lowside	4050A
86	Forward/ Reverse output lowside	6015C
87	Slew left/ right output lowside	4065A
88	Artic raise/ lower lowside	4044A
89	Engine ignition output (12V)	4027
90	buzzer highside output	4024
91	NOT USED	NOT USED
92	NOT USED	NOT USED
93	electric pump relay highside output	4025
94	Engine start (crank signal)	4028
95	NOT USED	NOT USED
96	NOT USED	NOT USED

© 2025 Enter your company name

Wires & Connectors:	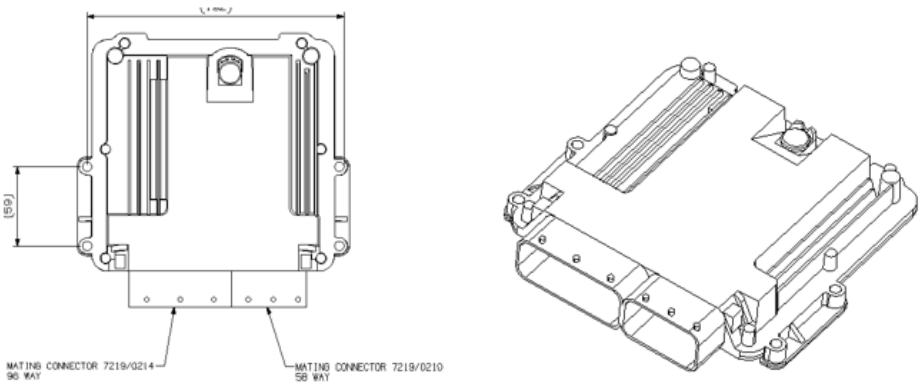
Internal Electrical Schematic:	
Testing:	Important: Use the multi-meter on the harness connector pins. DO NOT USE the meter on the ECU pins. 1. Connect machine to the Servicemaster diagnostic tool using the DLA Connector. 2. Ensure LED's change state when the corresponding function is selected and ensure a CAN message is being sent from the ECU on the network tab. 3. If faulty replace the MECU.
Expected Values:	
Related Fault Codes:	Refer PLM doc.AC00001178 for all ECU related fault codes. (Fault code start from B relates to ECU)

4.38 Transmission Pump

Component:	Transmission Pump
Function:	• The transmission pump is controlling the forward and reverse travel when a drive function is operated. • The transmission pump solenoids are proportional control.

© 2025 Enter your company name

Location:	Mount on Engine with flywheel
Location Image:	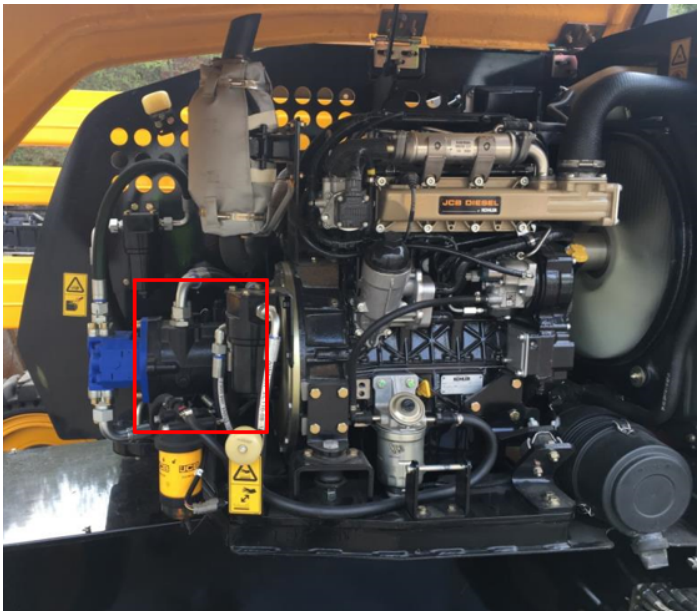 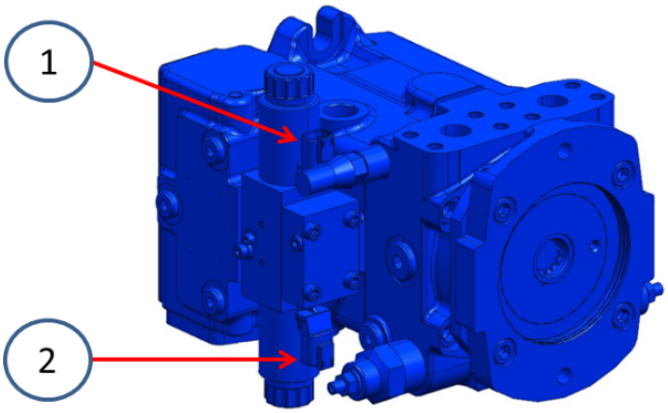 **Number Description** 1 Drive Reverse 2 Drive Forwards

Signal:

Pin Number	Description	Wire number
1	Forward Travel Feed	4064
2	Forward Travel Return	6015A
1	Reverse Travel Feed	4065
2	Reverse Travel Return	6015B

© 2025 Enter your company name

Wires & Connectors:	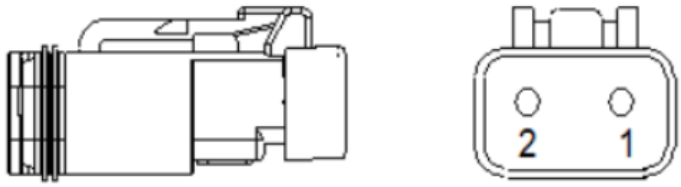
Internal Electrical Schematic:	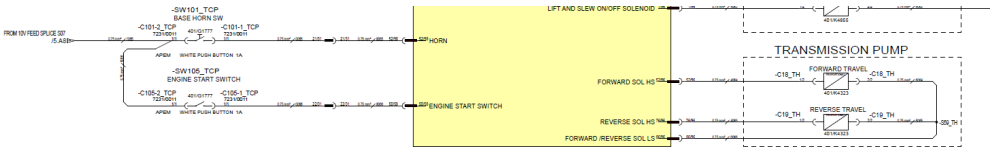
Testing:	Important: Use the multi-meter on the harness connector pins. DO NOT USE the meter on the ECU pins 1. Using a solenoid pen, check to see if the solenoid is powered when the function is in use. 2. If the solenoid pen shows no power, disconnect the harness from the solenoid. 3. Check the resistance across the solenoid. The reading should as 7.4 ohms+/-7& 4. If readings are incorrect, replace the solenoid. If correct disconnect the harness at the ECU and check harness continuity, repair/replace if necessary 5. If the harness continuity is OK, replace the solenoid
Expected Values:	
Related Fault Codes:	

Fault Code	Description
B1030-17	FORWARD OR REVERSE Proportional Solenoid Valve HS SC to Hig
B1031-16	FORWARD OR REVERSE Proportional Solenoid Valve HS SC to Lov
B1032-13	FORWARD OR REVERSE Proportional Solenoid Valve HS OC
B1033-17	FORWARD OR REVERSE Proportional Solenoid Valve LS SC to High
B1034-16	FORWARD OR REVERSE Proportional Solenoid Valve LS SC to Low
B1035-13	FORWARD OR REVERSE Proportional Solenoid Valve LS OC

4.39 Platform & Control Panel

© 2025 Enter your company name

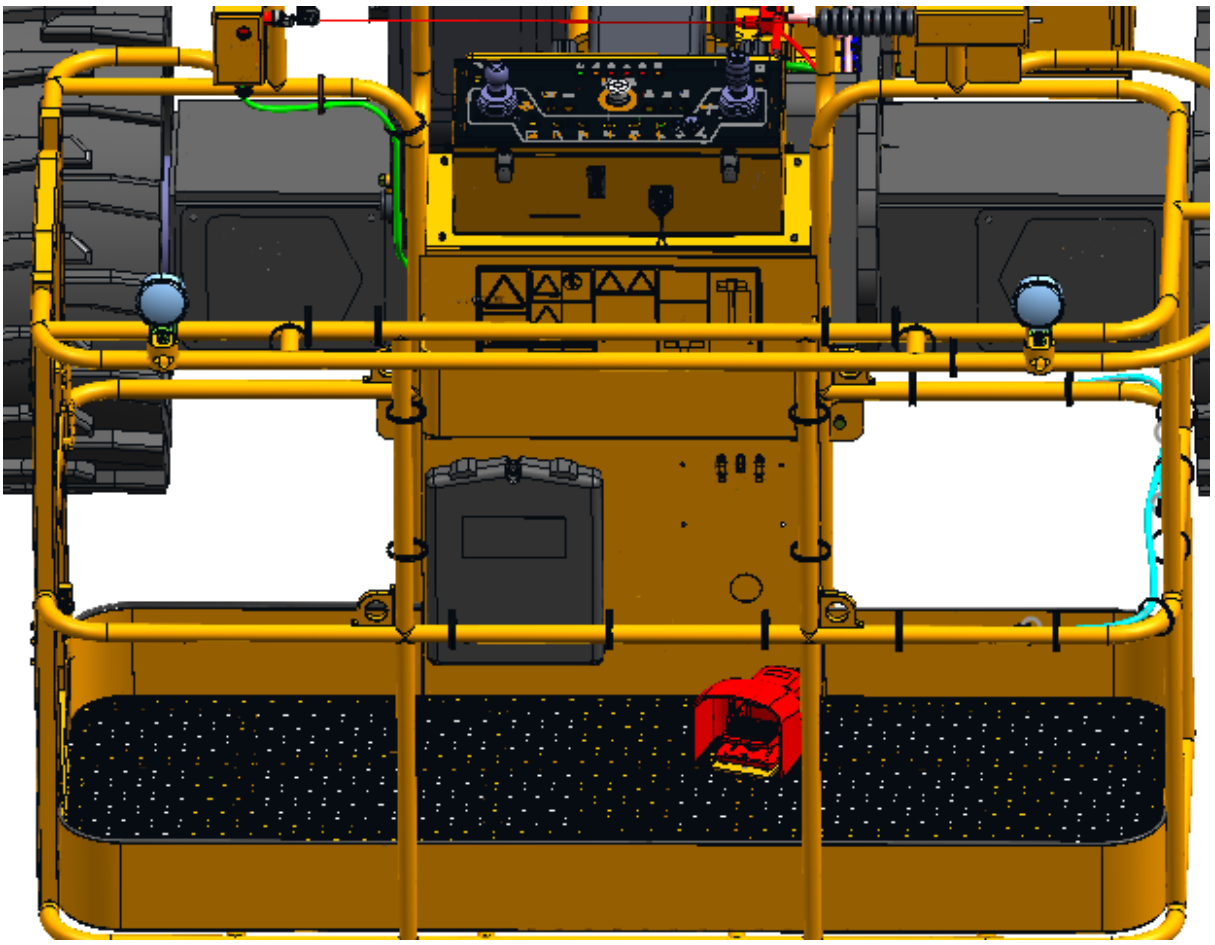

4.39.1 Foot Pedal Switch

Component:	Foot Pedal Switch
Function:	• The foot pedal is used as an enable button for the platform control station in most cases. • The exception to this is engine start and hydraulic generator.
Location:	The foot pedal is located on the platform floor. When depressed and held,it activates the controls on the platform control console.

© 2025 Enter your company name

Location Image:



Signal:

Pin Number	Description	Wire Numbers
C	Common feed in 10V	1075H
N/O	Foot Pedal pressed Signal	4096
N/C	Not Used	Not Used

Wires & Connectors:



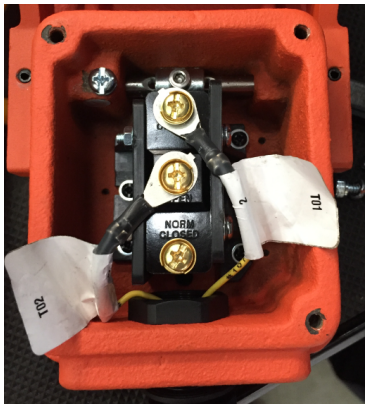

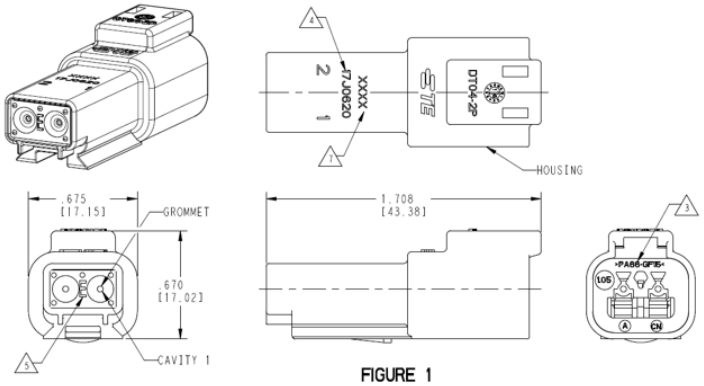

FIGURE 1

Internal Electrical Schematic:

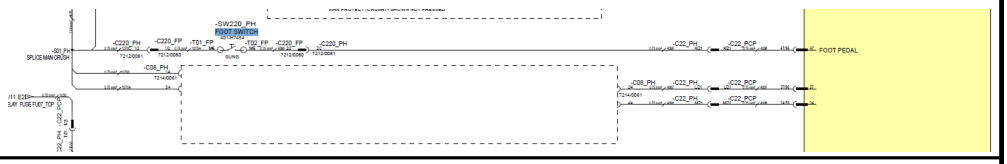

Testing: Check Continuity between Switch Terminal

Expected Values:

© 2025 Enter your company name

Related Fault Codes:	

Fault Code	Description
B1053-17	Foot pedal is short circuit to high (Platform)
B1054-16	Foot pedal is short circuit to low (Platform)

4.39.2 Crush Protection

Component:	Crush Protection
Function:	• The crush protect rope switch is to protect the operator from being crushed onto the controls. • This will automatically limit the permitted movement of the platform so that only downward and/or inward movement (i.e. away from an obstacle) is available, following detection of a crush. In other words, tripping the crush sensor automatically triggers the system to limit the available movement of the platform so that only movement away from the obstacle is possible. • No override mechanism is provided at either the base or the platform; the permitted movement is automatically restricted upon detection of a crush. • A reset switch is provided to enable full movement. An operator would actuate this reset switch once they determine it is safe to do so.
Location:	On Platform near Platform Control Box

© 2025 Enter your company name

Location Image:



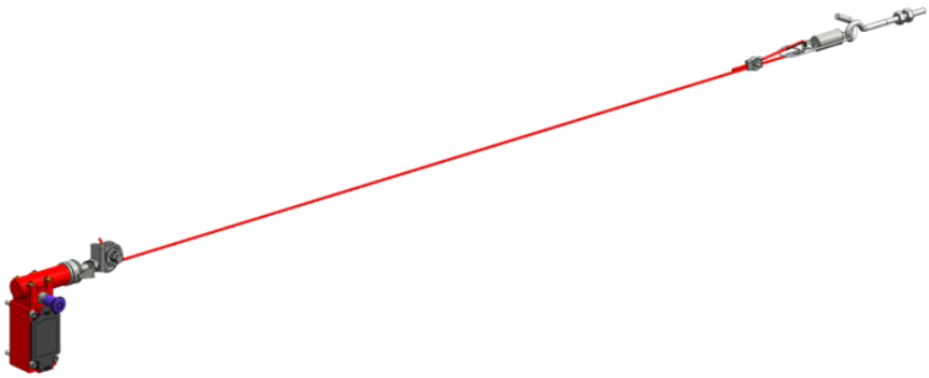



Signal:

Pin Number	Description	Wire Number
11	5V Feed In	4085
12	Signal	4094
21	10V Feed In	1075TT
22	Signal	4093

© 2025 Enter your company name

Wires & Connectors:	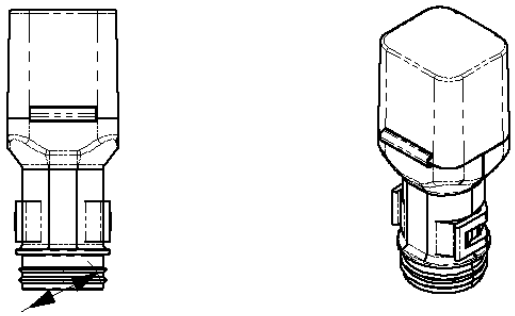
Internal Electrical Schematic:	The crush protection is shown with the switch reset and the rope not pressed. If there is no tension on the rope switch or the rope switch has been pressed both switches will open circuit. 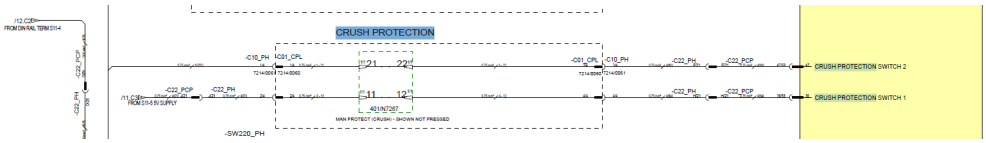
Testing:	Important: Use the multi-meter on the harness connector pins. DO NOT use the meter on the ECU pins Turn on the machine ignition 1. Press on the rope 2. Crush protection Icon should be shown on the display with buzzer 3. User Caution LED at the platform will light up with buzzer. 4. Pull the blue knob out on the switch to reset, Alarms/ icons should go off.
Expected Values:	
Related Fault Codes:	**Fault Code** / **Description** B1025-13 / CRUSH Protection Switch 1 and 2 Plausibility Check B1026-17 / CRUSH Protection Switch 1 SC to >5V

4.39.3 Platform Control Panel

Component:	Platform & Control Panel
Function:	The platform control panel is used for the machine operations.

© 2025 Enter your company name

Location:	On Platform
Location Image:	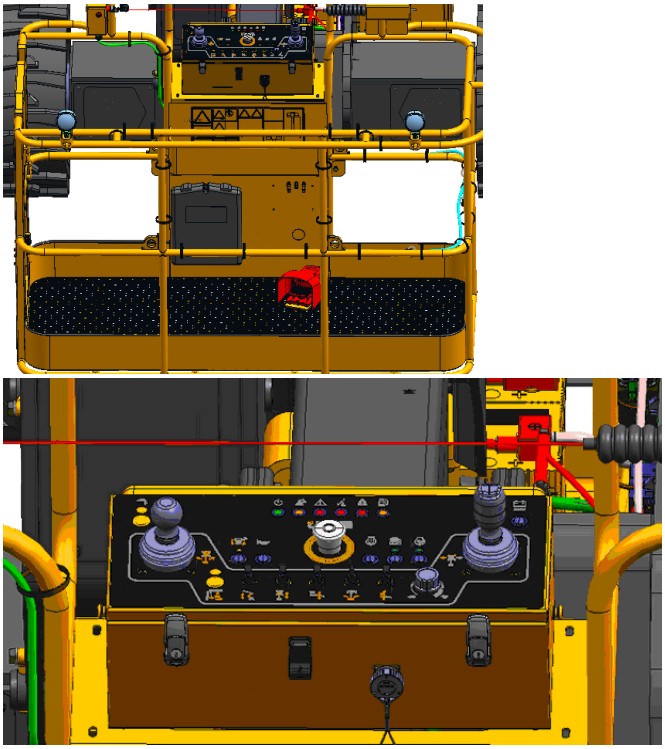
Signal:	-C30_PCP PLATFORM WORKLIGHTS CONN

ID	Tag	Size	Colour	Destination	Cable	Cavity Seal
1	1035	2.00 mm²	YE	-C216-1_PCP:1	-W01_PCP	
2	6079	2.00 mm²	YE	-C22_PCP:G	-W01_PCP	
3						7210/0030
4						7210/0030

7214/0035 4 Way DTP04 Pin Housing Flange Mount

Additional Components

7214/0031;1 # 4 Way DTP04 Wedge

© 2025 Enter your company name

-C22_PCP PLATFORM INTERCONNECT

ID	Tag	Size	Colour	Destination	Cable	Cavity Seal
A	4091	0.75 mm²	YE	-C26-XC2_PCP:22	-W01_PCP	
B	8079	2.00 mm²	YE	-T-S11-12-F_PCP:1	-W01_PCP	
C	4092	0.75 mm²	YE	-C27-XC1_PCP:57	-W01_PCP	
D	1070	2.00 mm²	YE	-T-S11-4-F_PCP:1	-W01_PCP	
E	6036	2.00 mm²	YE	-T-S11-10-E_PCP:1	-W01_PCP	
F	4093	0.75 mm²	YE	-C26-XC2_PCP:47	-W01_PCP	
G	6079	2.00 mm²	YE	-C30_PCP:2	-W01_PCP	
H	4094	0.75 mm²	YE	-C26-XC2_PCP:36	-W01_PCP	
J	4070	0.75 mm²	YE	-T-S11-5-D_PCP:1	-W01_PCP	
K	4096	0.75 mm²	YE	-C27-XC1_PCP:47	-W01_PCP	
L	4097	0.75 mm²	YE	-C27-XC1_PCP:37	-W01_PCP	
M	4098	0.75 mm²	YE	-C26-XC2_PCP:24	-W01_PCP	
N	4081	0.75 mm²	YE	-C27-XC1_PCP:54	-W01_PCP	
P	4082	0.75 mm²	YE	-C27-XC1_PCP:78	-W01_PCP	
R	4083	0.75 mm²	YE	-C27-XC1_PCP:53	-W01_PCP	
S	4084	0.75 mm²	YE	-C27-XC1_PCP:77	-W01_PCP	
T	1030	0.75 mm²	YE	-T-S11-2-F_PCP:1	-W01_PCP	
U	6072	0.75 mm²	YE	-T-S11-6-B_PCP:1	-W01_PCP	
V	6070	0.75 mm²	YE	-T-S11-6-D_PCP:1	-W01_PCP	
W	4101	0.75 mm²	YE	-C27-XC1_PCP:69	-W01_PCP	
X	4102	0.75 mm²	YE	-C27-XC1_PCP:70	-W01_PCP	

7220/0046 21 Way HDP Bulkhead Pin Housing (Receptacle)

Additional Components

7210/0047;1 # Size 24 Lockwasher
7210/0048;1 # Size 24 Plastic Jam Nut

-C21_PCP BOOM HARNESS CONN

ID	Tag	Size	Colour	Destination	Cable	Cavity Seal
A	1014	2.00 mm²	YE	-T-S11-1-E_PCP:1	-W01_PCP	
B	1015	2.00 mm²	YE	-T-S11-2-E_PCP:1	-W01_PCP	
C						7204/0028
D	6078	2.00 mm²	YE	-T-S11-7-B_PCP:1	-W01_PCP	
E	6040	2.00 mm²	YE	-T-S11-10-F_PCP:1	-W01_PCP	
F	6028	2.00 mm²	YE	-T-S11-11-D_PCP:1	-W01_PCP	
G						7210/0030
H						7210/0030
J						7210/0030
K						7210/0030
L						7210/0030
M	CAN H15	0.50 mm²	YE	-T-S11-13-F_PCP:1	-MC11_PCP	
N	CAN L15	0.50 mm²	GN	-T-S11-14-F_PCP:1	-MC11_PCP	
P	CAN S15	0.50 mm²	N/A	-T-S11-15-F_PCP:1	-MC11_PCP	

7219/0087 14 Way HDP Bulkhead Pin Housing (Receptacle) Size 18

Additional Components

7210/0119;1 # Size 18 Plastic Jam Nut
7210/0120;1 # Size 18 Lockwasher
7243/0606;1 # Gasket - TE/HDP Series

© 2025 Enter your company name

Wires & Connectors:	Boom Harness connector C21: Platform interconnection C22: Platform work light interconnection C31: 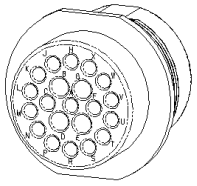 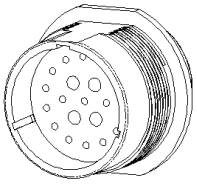 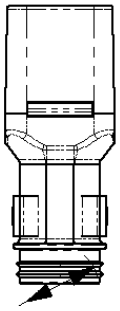 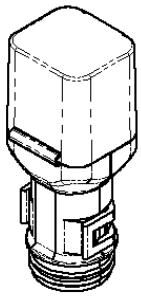 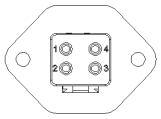 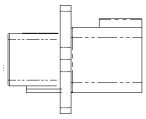 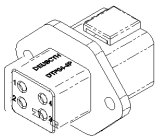
Internal Electrical Schematic:	Refer AJ48D Boom Schematic Part No : 401/T6225
Testing:	
Expected Values:	
Related Fault Codes:	

© 2025 Enter your company name

4.39.4 Platform ECU

<table>
<tr><td>Component :</td><td>Platform ECU</td></tr>
<tr><td>Function:</td><td>

When the ECU turns on, there is a check in the Platform software to ensure the ECU is in a safe state to turn on and enable.
After the Bosch boot block check there should be a check in the software to check for status of inputs to ensure the software is in a safe condition before allowing all functions.
The Platform Bosch ECU perform all the functions of machine.

</td></tr>
<tr><td>Location:</td><td>The platform ECU is located inside the control box.</td></tr>
<tr><td>Location Image:</td><td> 
 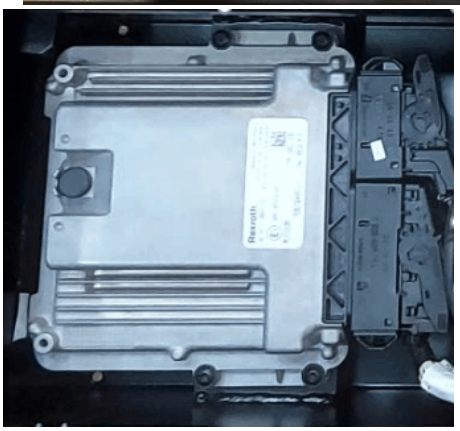 </td></tr>
<tr><td>Signal:</td><td>
58 Way Connector
<table>
<tr><th>Pin Number</th><th>Description/Signal</th><th>Wire Number</th></tr>
<tr><td>1</td><td>Power Supply 12V input</td><td>1044</td></tr>
<tr><td>2</td><td>GND Signal</td><td>6039</td></tr>
</table>
</td></tr>
</table>

© 2025 Enter your company name

3	Power Supply 12V input	1045
4	Power Supply 12V input	1046
5	Power Supply 12V input	1047
6	Power Supply 12V input	1048
7	GND Signal	6040
8	NOT USED	NOT USED
9	Platform level lower switch input (10V when pressed)	81
10	Platform level raise switch input (10V when pressed)	80
11	Platform rotate right switch input (10V when pressed)	79
12	platform rotate left switch input (10V when pressed)	78
13	NOT USED	NOT USED
14	Jib Lower switch input (10V when pressed)	77
15	CAN H1 J1939	yellow
16	CAN L1 J1939	Green
17	NOT USED	NOT USED
18	NOT USED	NOT USED
19	5V Supply potentiometer (5V)	4074
20	GND	6041
21	NOT USED	NOT USED
22		
23		
24		
25	Hydraulic generator switch input (10V when pressed, momentary)	82
26	Drive joystick input (0.5-2.5-4.5)	4073
27	NOT USED	NOT USED
28	E-Stop Positive (12V when un-pressed)	68
29	NOT USED	NOT USED
30	NOT USED	NOT USED
31	Slew joystick input (0.5-2.5-4.5)	4070
32	10V ECU Output (10V)	62
33	GND	6042
34	Artic boom switch raise (10V when pressed)	73
35	Artic boom switch lower (10V when pressed)	72
36	Crush protection (5V when not pressed and reset)	4094
37	NOT USED	NOT USED
38	NOT USED	NOT USED

© 2025 Enter your company name

39	NOT USED	NOT USED
40	Ignition feed (12V with key on)	1055
41	Fault LED Output (12V when fault)	4078
42	low fuel led output (12V when Low fuel)	4090
43	high engine speed led (12V when high speed enabled)	4089
44	NOT USED	NOT USED
45	Power supply input (12V)	1049
46	GND	6043
47	crush protection (10V when not pressed and reset)	4093
48	Engine high speed switch input	88
49	RC Config 2 open circuit	NOT USED
50	engine start switch input (10V when pressed, momentary)	86
51	Slew acknowledgement switch input	83
52	Horn switch input	85
53	NOT USED	NOT USED
54	NOT USED	NOT USED
55	5V Feed to Joysticks via din rail S11-5 (5V output from ecu)	4069
56	NOT USED	NOT USED
57	NOT USED	NOT USED
58	power supply electronics (12V)	1050

96 Way connector

Pin Number	Description/Signal	Wire Number
1	NOT USED	NOT USED
2	NOT USED	NOT USED
3	Proximity reset led output (12V when on)	4087
4	NOT USED	NOT USED
5	NOT USED	NOT USED
6	Caution LED Output (12V when on)	4077
7	High torque LED output	4088
8	NOT USED	NOT USED
9	NOT USED	NOT USED
10	NOT USED	NOT USED
11	NOT USED	NOT USED
12	NOT USED	NOT USED
13	NOT USED	NOT USED

© 2025 Enter your company name

14	E-Stop -ve feed (GND when unpressed)	69
15	NOT USED	NOT USED
16	NOT USED	NOT USED
17	NOT USED	NOT USED
18	NOT USED	NOT USED
19	NOT USED	NOT USED
20	NOT USED	NOT USED
21	NOT USED	NOT USED
22	GND	6045
23	GND	6046
24	GND	6047
25	NOT USED	NOT USED
26	NOT USED	NOT USED
27	NOT USED	NOT USED
28	Hydraulic generator LED (12V when active)	4085
29	NOT USED	NOT USED
30	NOT USED	NOT USED
31	NOT USED	NOT USED
32	NOT USED	NOT USED
33	NOT USED	NOT USED
34	NOT USED	NOT USED
35	Jib Switch input - raise (10V when pressed)	76
36	High Torque switch input (10V when pressed, momentary)	87
37	NOT USED	NOT USED
38	NOT USED	NOT USED
39	Potentiometer signal (0-5V)	4075
40	NOT USED	NOT USED
41	Steer Joystick signal	4072
42	Main boom telescope input switch - retract (10V when pressed)	75
43	electric pump switch input (10V when pressed, momentary)	89
44	Main boom telescope input switch - extend (10V when pressed)	74
45	5V GND potentiometer	6027
46	5V GND joysticks, potentiometer	6028
47	Foot pedal input (10V when pressed)	4096
48	proximity reset switch (10V when pressed, momentary)	0084 (switch is optional fit)
49	NOT USED	NOT USED

© 2025 Enter your company name

50	NOT USED	NOT USED
51	NOT USED	NOT USED
52	NOT USED	NOT USED
53	Platform rotate right solenoid output (12V when active)	4083
54	Jib lower solenoid output (12V when active)	4081
55	NOT USED	NOT USED
56	NOT USED	NOT USED
57	NOT USED	NOT USED
58	NOT USED	NOT USED
59	NOT USED	NOT USED
60	NOT USED	NOT USED
61	NOT USED	NOT USED
62	NOT USED	NOT USED
63	NOT USED	NOT USED
64	Main boom joystick input signal (0.5-2.5-4.5)	4071
65	NOT USED	NOT USED
66	NOT USED	NOT USED
67	NOT USED	NOT USED
68	NOT USED	NOT USED
69	Load cell sensor 1	4101
70	Load cell sensor 2	4102
71	NOT USED	NOT USED
72	NOT USED	NOT USED
73	NOT USED	NOT USED
74	NOT USED	NOT USED
75	NOT USED	NOT USED
76	NOT USED	NOT USED
77	platform rotate left solenoid output	4084
78	Jib raise solenoid output	4082
79	NOT USED	NOT USED
80	NOT USED	NOT USED
81	NOT USED	NOT USED
82	NOT USED	NOT USED
83	NOT USED	NOT USED
84	NOT USED	NOT USED
85	NOT USED	NOT USED
86	NOT USED	NOT USED
87	NOT USED	NOT USED
88	NOT USED	NOT USED

© 2025 Enter your company name

	89 | Slew acknowledgment LED output | 4086 90 | Buzzer output | 4076 91 | NOT USED | NOT USED 92 | NOT USED | NOT USED 93 | overload LED output | 4080 94 | Tilt LED output | 4079 95 | NOT USED | NOT USED 96 | RC Config pin 1 (GND) | 6036
Wires & Connectors:	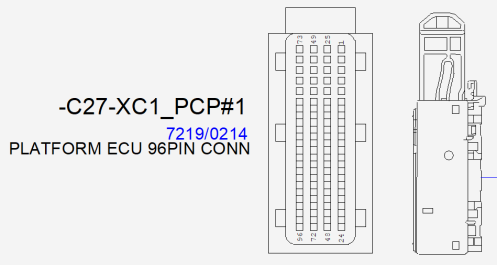 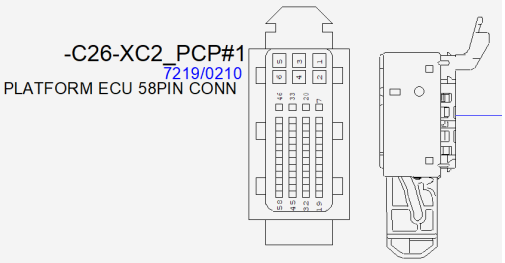 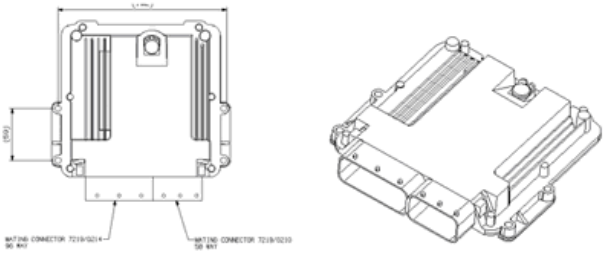
Internal Electrical Schematic:	Refer AJ48D Boom Electrical schematic:-Part No: 401/T6225.
Testing:	Important: Use the multi-meter on the harness connector pins. DO NOT USE the meter on the ECU pins 1. Connect machine to the Servicemaster diagnostic tool using the DLA Connector. 2. Ensure LED's change state when the corresponding function is selected and ensure a CAN message is being sent from the ECU on the network tab.

© 2025 Enter your company name

	3. If faulty replace the MECU.
Expected Values:	
Related Fault Codes:	**Fault Code** / **Description** U1299-87 / CAN PAIRING FAILED ERROR

4.39.5 Platform Buzzer

Component:	Platform Buzzer
Function:	• The buzzer is there to warn the operator when either an fault or error has happened with the machine or to warn of machine is awaiting for operator action. • For example, if the foot pedal is pressed for longer than 10 seconds without a function being pressed, this will time out and make the buzzer sound. • The platform buzzer and the base buzzer should be a repeat of each other. • If 1 buzzer is working and the other is not then there is issue with the buzzer
Location:	Inside the Platform Control Box

© 2025 Enter your company name

Location Image:

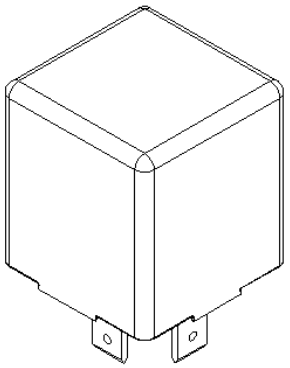

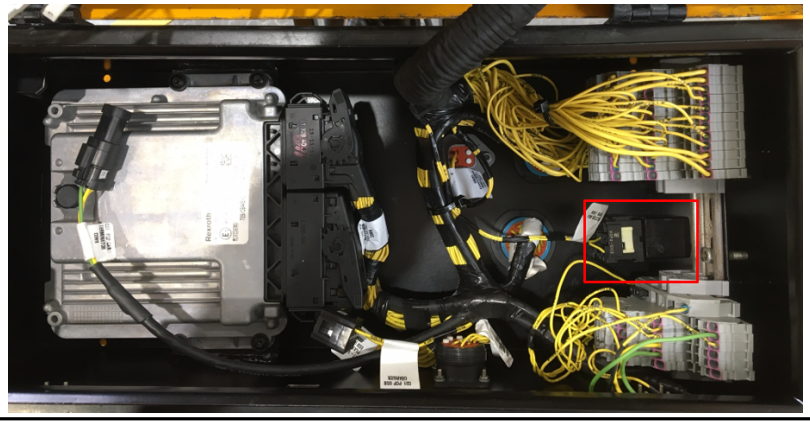

Signal:

Pin Number	Description	Wire number
1	IGN	4076
2	BUZZ	
3		
4	GND	6076
5		

Wires & Connectors:

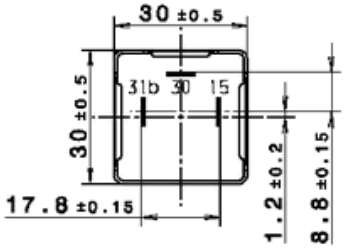

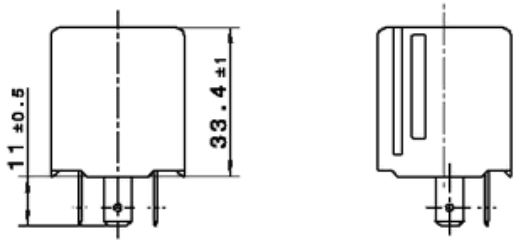

© 2025 Enter your company name

Internal Electrical Schematic:	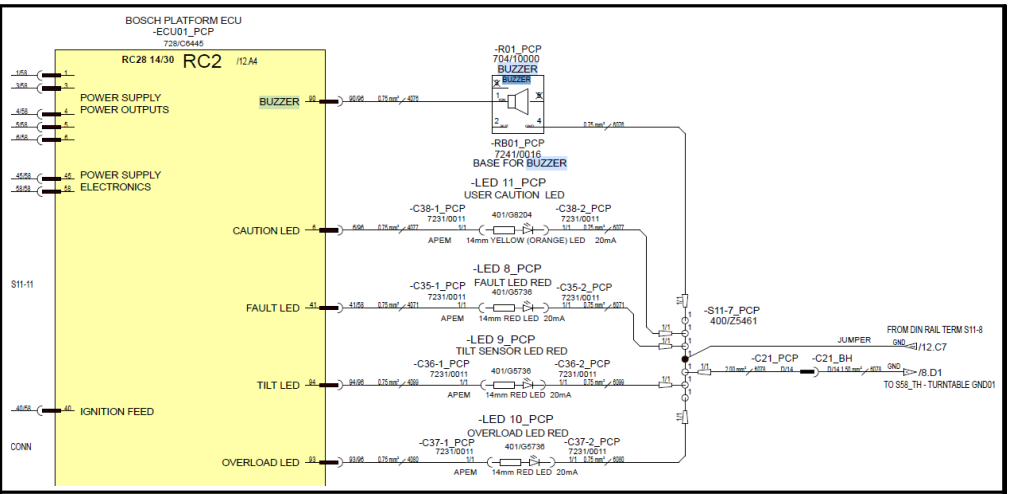
Testing:	Important: Use the multi-meter on the harness connector pins. DO NOT USE the meter on the ECU pins 1. There are two buzzer fitted on machine one is inside base control panel and another is inside platform control panel. Ensure no water ingress 2. Check supply at connector R01_TCP pin no 1 & 4 This should read 12V 3. If there is no supply check wiring as per the schematic 4. If there is supply on harness there may be internal damage to buzzer Note-Remove the buzzer from its holder and wire to 12V and GND signals and the buzzer should sound
Expected Values:	
Related Fault Codes:	**Fault Code** / **Description** B1177-16 / BUZZER SC to Low B1178-13 / BUZZER OC

4.39.6 Drive and Steer Joystick

Component:	Drive and Steer Joystick
Function:	• This Joystick is used for Drive and Steer functions. • This is a proportional Single axis joystick with additional buttons on top • Y axis = Drive forward and backward control

© 2025 Enter your company name

	• Buttons on top - Left and Right steer control
Location:	The Drive joystick is located RHS on the platform control panel
Location Image:	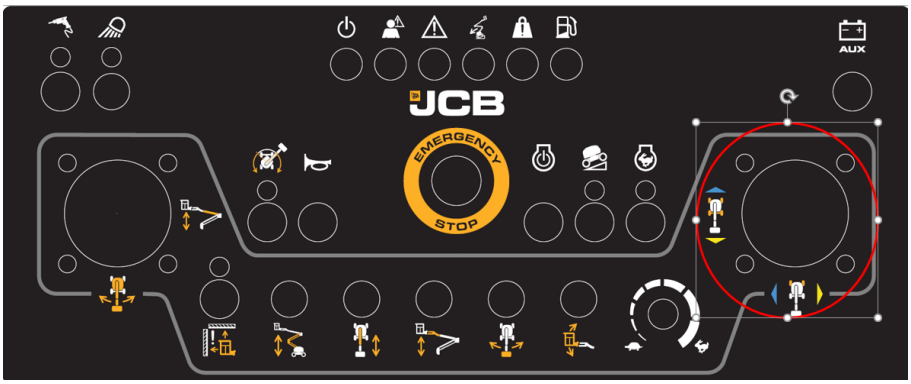
Signal:	

Pin Number	Description	Wire Number
1	GND	6026
2	+5V	1057
3	Not Used	Not Used
4	Drive Signal	4073
5	Steer Signal	4072

Wires & Connectors:	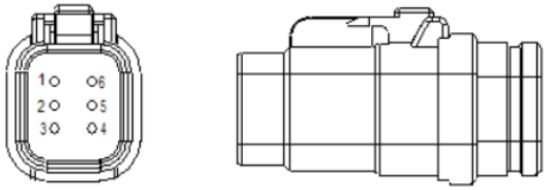 7216/0021 6 Way Connector
Internal Electrical Schematic:	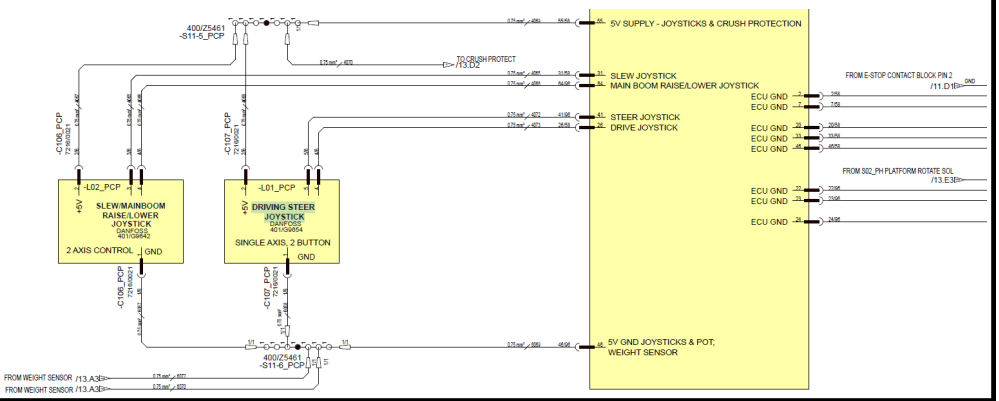
Testing:	Important: Use the multi-meter on the harness connector pins. DO NOT USE the meter on the ECU pins

© 2025 Enter your company name

	1.Note- Drive and steer is a single axis joystick with 2 buttons on the top for steer. This switch is of 5V hence be careful there is no protection on this input if over 5v goes it will break and damage beyond repair. 1. There are 4 wires, 2 input and 2 output, 2 inputs are 5V and 5V ground 2. The 2 outputs are one for steer and one for drive. 3. Make sure joystick is fitted properly so no water ingress. 4. Check supply at C107 (Pin 1 & 2). It should read 5V. If there is no 5V then investigate wiring as per schematic. 5. Joystick on center position. Check voltage on connector C107 (Pin 5) & also at C107 (Pin4). It should read 2.5V. There is 8% tolerance deadband at centre position. 6. Voltage changes from 0.5V to 4.5 V after moving joystick. 7. If Input voltage OK then it may be internal damage inside the joystick. 8. Replace it
Expected Values:	
Related Fault Codes:	

Fault Code	Description
B1146-17	STEER JOYSTICK SC to High (>4.75V)
B1147-16	STEER JOYSTICK SC to Low (<0.25V) or OC
B1069-17	Drive JOYSTICK SC to High (>4.75V)
B1070-16	Drive JOYSTICK SC to Low (<0.25V) or OC

4.39.7 Slew & Main Boom Up/Down Joystick

Component:	Slew & Main Boom Up/Down Joystick
Function:	• This joystick is for Main Boom Lift and Slew control of the machine • The joystick gives proportional control of the functions of 2 Axis • X Axis = Slew control

© 2025 Enter your company name

<table>
<tr><td></td><td>• Y Axis = Main boom control</td></tr>
<tr><td>Location:</td><td>The joystick is located on the LHS of the platform control panel.</td></tr>
<tr><td>Location Image:</td><td> 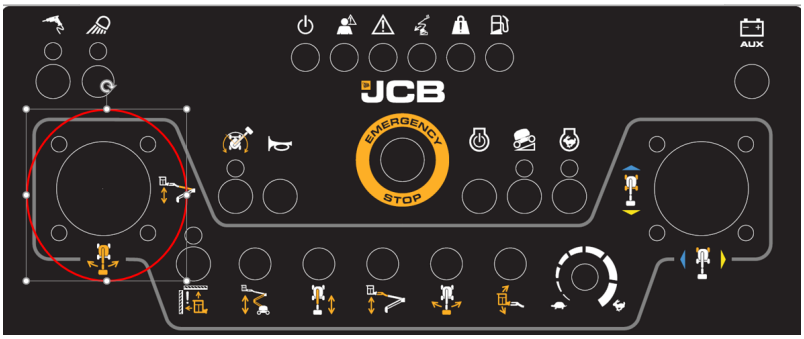
</td></tr>
<tr><td>Signal:</td><td>
<table>
<tr><th>Pin Number</th><th>Description</th><th>Wire Number</th></tr>
<tr><td>1</td><td>GND</td><td>6025</td></tr>
<tr><td>2</td><td>+5V</td><td>1056</td></tr>
<tr><td>3</td><td>Slew Signal</td><td>4070</td></tr>
<tr><td>4</td><td>Main Boom Signal</td><td>4071</td></tr>
<tr><td>5</td><td>Not Used</td><td>Not Used</td></tr>
<tr><td>6</td><td>Not Used</td><td>Not Used</td></tr>
</table>
</td></tr>
<tr><td>Wires & Connectors:</td><td> 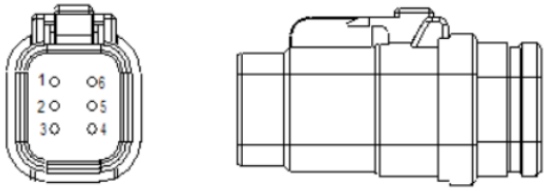

7216/0021 6 Way Connector</td></tr>
<tr><td>Internal Electrical Schematic:</td><td> 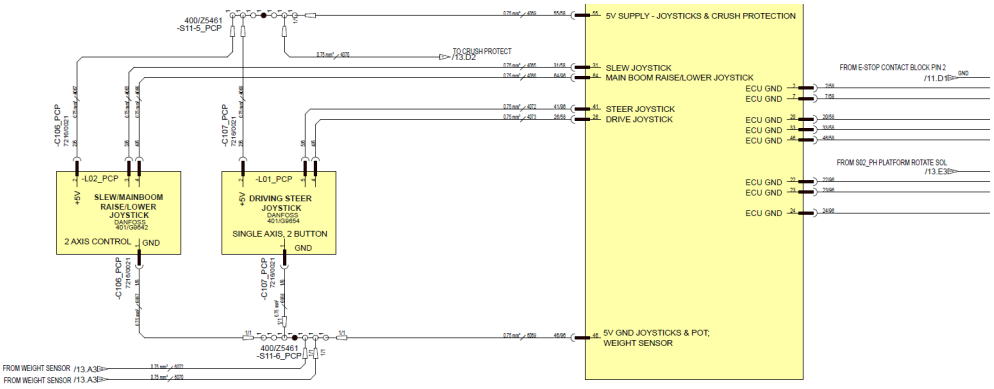
</td></tr>
<tr><td>Testing:</td><td>Important: Use the multi-meter on the harness connector pins. DO NOT USE the meter on the ECU pins</td></tr>
</table>

© 2025 Enter your company name

	1. Note- Slew & main boom raise and lower joystick is double axis joystick. 5V hence be careful there is no protection on this input if over 5v goes it will break and damage beyond repair. 1. There are 4 wires, 2 input and 2 output, 2 inputs are 5V and 5V ground 2. The 2 outputs are one for slew & one for main boom. 3. Make sure joystick is fitted properly and there is no water ingress. 4. Check supply at C106 (Pin 1 & 2). It should read 5V. If there is no 5V then investigate wiring as per schematic. 5. Joystick on center position. Check voltage on connector C106 (Pin 3) & also at C106 (Pin4). It should read 2.5V. 6. Voltage changes from 0.5V to 4.5 V after moving joystick. 7. If Input voltage OK then it may be internal damage inside the joystick. 8. Replace it
Expected Values:	
Related Fault Codes:	

Fault Code	Description
B1146-17	STEER JOYSTICK SC to High (>4.75V)
B1147-16	STEER JOYSTICK SC to Low (<0.25V) or OC
B1148-17	LIFT JOYSTICK SC to High (>4.75V)
B1149-16	LIFT JOYSTICK SC to Low (<0.25V) or OC
B1150-17	SLEW JOYSTICK SC to High (>4.75V)

4.39.8 Main Boom Telescope Extend/Retract Switch(PCP)

Component:	Main Boom Telescope Extend/Retract Switch(PCP)
Function:	• This switch is to operate the main boom telescope in either extend or retract positioning from the platform control station. • This switch is and on-off-on switch. • The foot pedal is required to enable operation

© 2025 Enter your company name

Location: On Platform Control Box

Location Image:

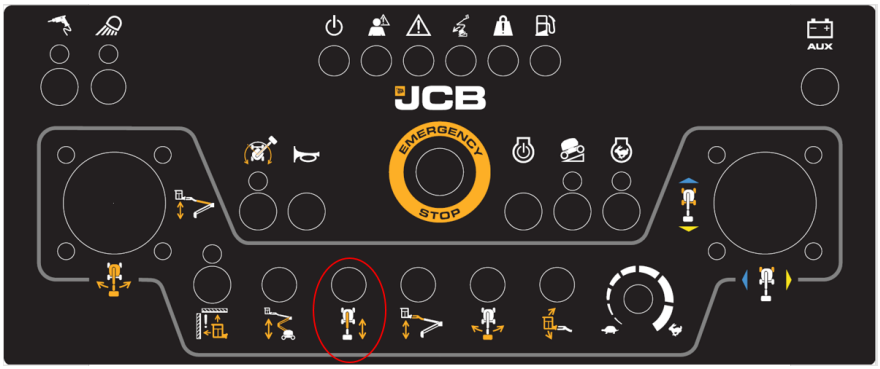

Signal:

Pin Number	Description/ Signal	Connector number	Wire number(s)	Voltage with switch unpressed	Voltage with switch pressed
1	Telescope Retract	C300-1 PCP	75	2.7 V	10V
2	Power in (10V)	C300-2 PCP	1063, 1064	10V	NA
3	Telescope Extend	C300-3 PCP	74	2.7V	10V

Wires & Connectors:





© 2025 Enter your company name

Internal Electrical Schematic:	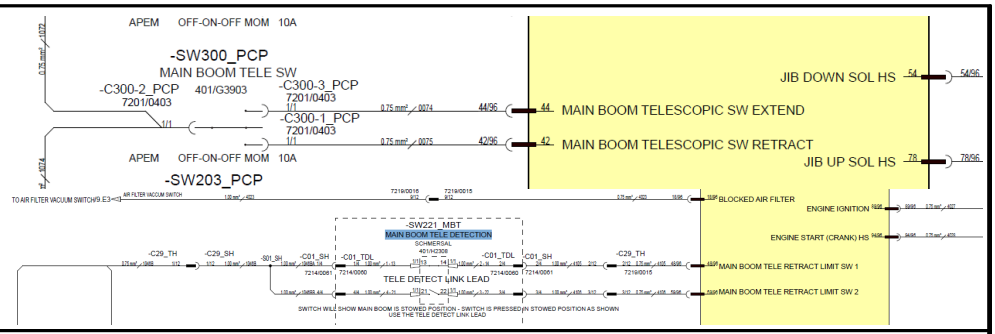
Testing:	Important: Use the multi-meter on the harness connector pins. DO NOT USE the meter on the ECU pins. 1. There are 3 contact on the back of switch. 2. Check terminal 1, 2 & 3 connected correctly with wiring harness terminal 1,2 & 3 respectively. 3. Terminal 2 is for incoming supply 4. Check continuity between ‘terminal 2 & terminal 3’ and ‘terminal 2 & terminal 1’. It should not buzz 5. When switch is pressed up. Terminal 2 should buzz with bottom terminal & when switch is pressed down. Terminal 2 should buzz with up terminal. 6. Check supply at terminal 2. It should read 10V. 7. If there is no 10V then investigate wiring as per schematic. 8. If there is 10V available and continuity is OK then it should be internal damage to switch. Replace it
Expected Values:	
Related Fault Codes:	**Fault Code** / **Description** B1252-17 — MAIN BOOM TELESCOPE EXTEND Switch SC to High B1253-17 — MAIN BOOM TELESCOPE RETRACT Switch SC to High B1254-92 — MAIN BOOM TELESCOPE EXTEND & RETRACT Switches both activated (5 - 10V) B1255-16 — MAIN BOOM TELESCOPE EXTEND Switch SC to Low

4.39.9 Articulated Raise/Lower Switch(PCP)

Component	Articulated Raise/Lower Switch(PCP)

© 2025 Enter your company name

<table>
<tr><th>:</th><th></th></tr>
<tr><td>Function:</td><td>

This switch is to operate the Articulated boom in either raise or lower positioning.
This switch is and on-off-on switch.
The foot switch is required to enable operation

</td></tr>
<tr><td>Location:</td><td>On Platform Control Box</td></tr>
<tr><td>Location Image:</td><td> 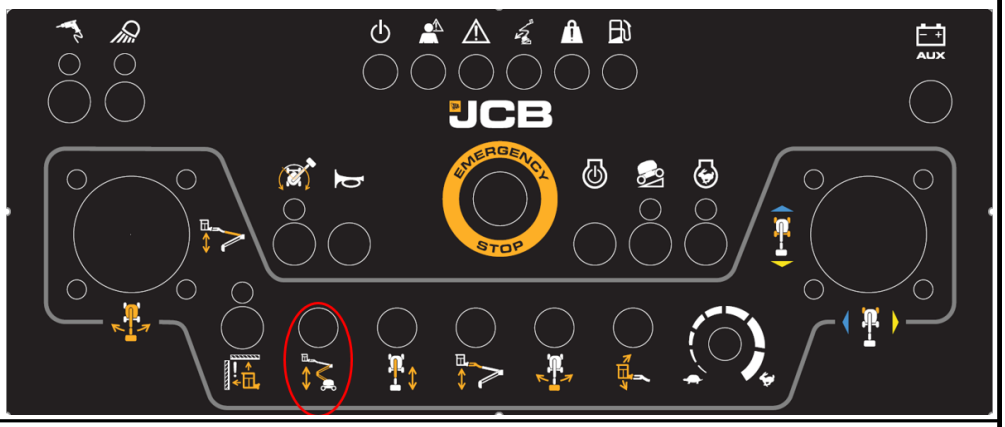
</td></tr>
<tr><td>Signal:</td><td>
<table>
<tr><th>Pin Number</th><th>Description/ Signal</th><th>Connector number</th><th>Wire number(s)</th><th>Voltage with switch unpressed</th><th>Voltage with switch pressed</th></tr>
<tr><td>1</td><td>Artic boom raise</td><td>C201-1 PCP</td><td>73</td><td>3.4 V</td><td>10V</td></tr>
<tr><td>2</td><td>Power in (10V)</td><td>C201-2 PCP</td><td>1063</td><td>10V</td><td>NA</td></tr>
<tr><td>3</td><td>Artic boom lower</td><td>C201 -3 PCP</td><td>72</td><td>2.7V</td><td>10V</td></tr>
</table>
</td></tr>
</table>

© 2025 Enter your company name

Wires & Connectors:	 
Internal Electrical Schematic:	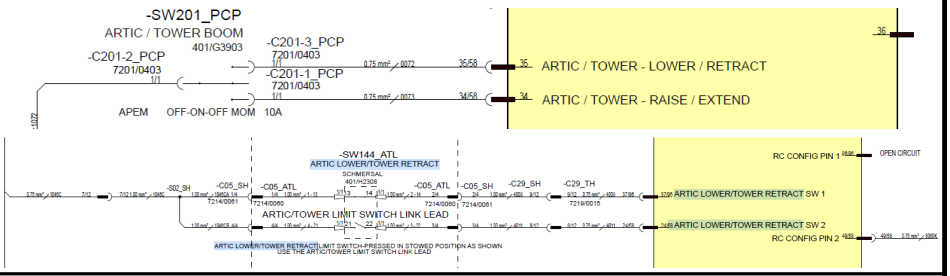
Testing:	Important: Use the multi-meter on the harness connector pins. DO NOT USE the meter on the ECU pins. 1. There are 3 contact on the back of switch. . 2Check terminal 1, 2 & 3 connected correctly with wiring harness terminal 1,2 & 3 respectively. 3. Terminal 2 is for incoming supply 4. Check continuity between ‘terminal 2 & terminal 3’ and ‘terminal 2 & terminal 1’. It should not buzz 5. When switch is pressed up. Terminal 2 should buzz with bottom terminal & when switch is pressed down. Terminal 2 should buzz with up terminal. 6. Check supply at terminal 2. It should read 10V. 7. If there is no 10V then investigate wiring as per schematic. 8. If there is 10V available and continuity is OK then it should be internal damage to switch. Replace it.

© 2025 Enter your company name

Expected Values:	
Related Fault Codes:	

Fault Code	Description
B1247-17	ARTICULATED BOOM RAISE Switch SC to High
B1248-17	ARTICULATED BOOM LOWER Switch SC to High
B1249-92	ARTICULATED BOOM RAISE & LOWER Switches both activated (5 - 10V)
B1250-16	ARTICULATED BOOM RAISE Switch SC to Low
B1251-16	ARTICULATED BOOM LOWER Switch SC to Low

4.39.10 Jib Up/Down Switch(PCP)

Component:	Jib Up/Down Switch(PCP)
Function:	• This switch is to operate the jib in either raise or lower positioning from the platform control station. • This switch is and on-off-on switch. • The foot pedal is required to enable operation
Location:	On Platform Control Box

© 2025 Enter your company name

Location Image:

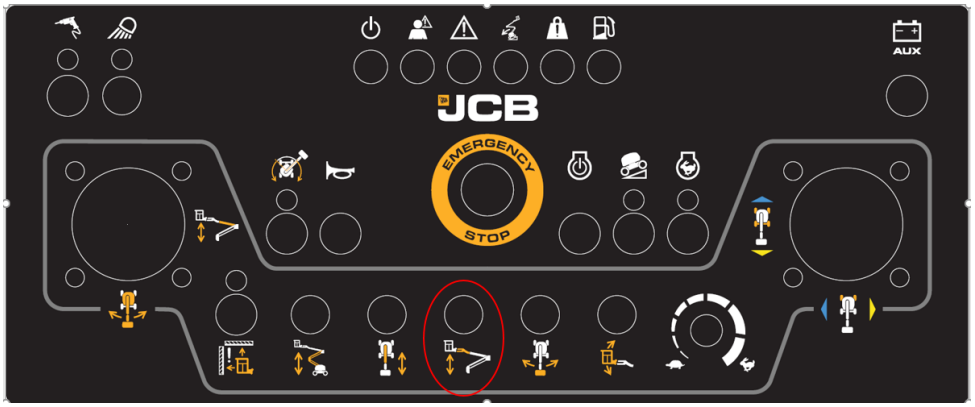



Signal:

Pin Number	Description/ Signal	Connector number	Wire number(s)	Voltage with switch unpressed	Voltage with switch pressed
1	Jib Lower	C203-1 PCP	76	2.7 V	10V
2	Power in (10V)	C203-2 PCP	1064, 105B	10V	NA
3	Jib Raise	C203-3 PCP	77	2.7V	10V

© 2025 Enter your company name

Wires & Connectors:





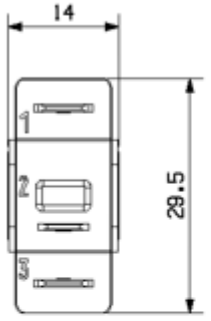

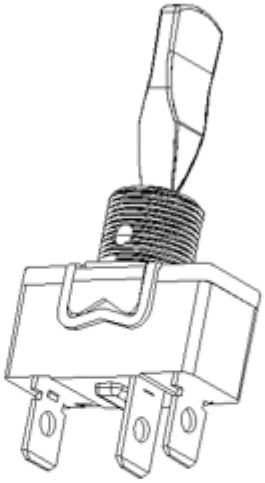

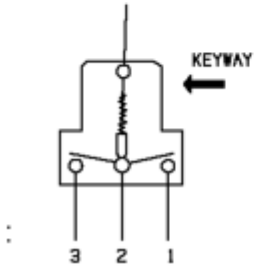

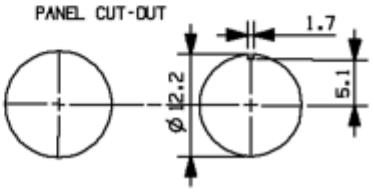

© 2025 Enter your company name

Internal Electrical Schematic:	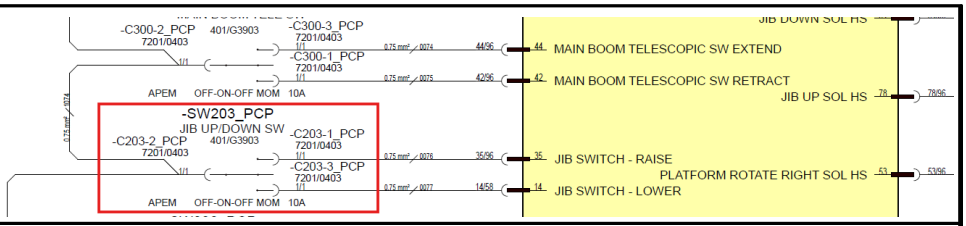
Testing:	Important: Use the multi-meter on the harness connector pins. DO NOT USE the meter on the ECU pins 1. There are 3 contact on the back of switch. 2. Check terminal 1, 2 & 3 connected correctly with wiring harness terminal 1,2 & 3 respectively. 3. Terminal 2 is for incoming supply 4. Check continuity between ‘terminal 2 & terminal 3’ and ‘terminal 2 & terminal 1’. It should not buzz 5. When switch is pressed up. Terminal 2 should buzz with bottom terminal & when switch is pressed down. Terminal 2 should buzz with up terminal. 6. Check supply at terminal 2. It should read 10V. 7. If there is no 10V then investigate wiring as per schematic. 8. If there is 10V available and continuity is OK then it should be internal damage to switch. Replace it.
Expected Values:	
Related Fault Codes:	**Fault Code** / **Description** B1262-17 / JIB RAISE Switch SC to High B1263-17 / JIB LOWER Switch SC to High B1264-92 / JIB RAISE & LOWER Switches both activated (5 - 10V) B1265-16 / JIB RAISE Switch SC to Low B1266-16 / JIB LOWER Switch SC to Low

4.39.11 Platform Rotate Left/Right Switch(PCP)

Component:	Platform Rotate Left/Right Switch(PCP)
Function:	• This switch is to operate the platform rotate in either left or right positioning from the platform control station.

© 2025 Enter your company name

	• This switch is and on-off-on switch. • The foot pedal is required to enable operation
Location:	On Platform Control Box
Location Image:	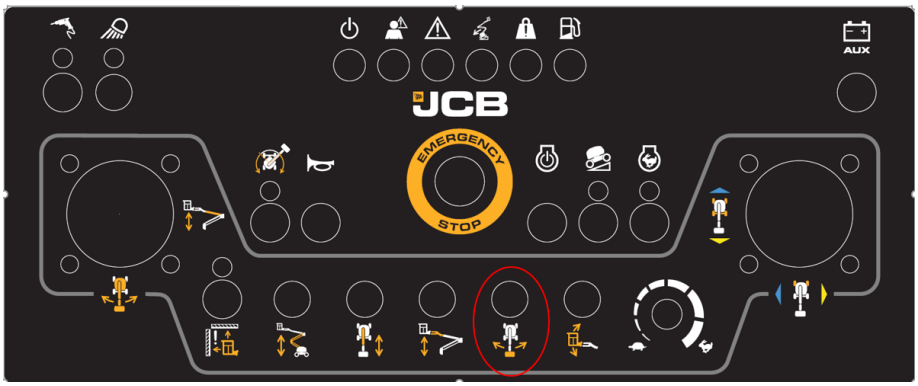 

Signal:

Pin Number	Description/ Signal	Connector number	Wire number(s)	Voltage with switch unpressed	Voltage with switch pressed
1	platform rotate right	C202-1_PCP	79	2.7 V	10V
2	Power in (10V)	C202-2_PCP	1059, 1065	10V	NA
3	platform rotate left	C202-3_PCP	78	3.4 V	10V

© 2025 Enter your company name

Wires & Connectors:





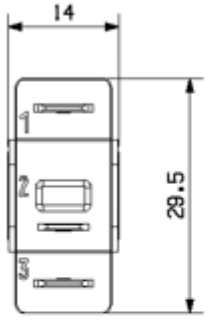

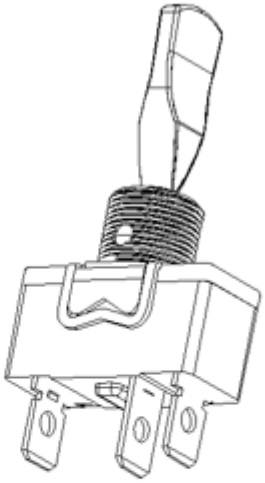

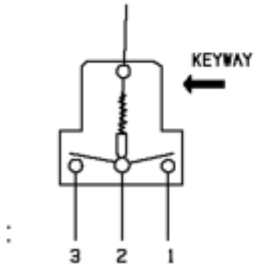

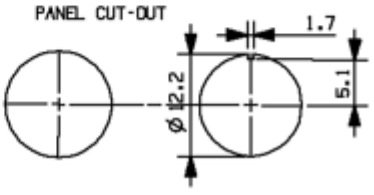

© 2025 Enter your company name

Internal Electrical Schematic:	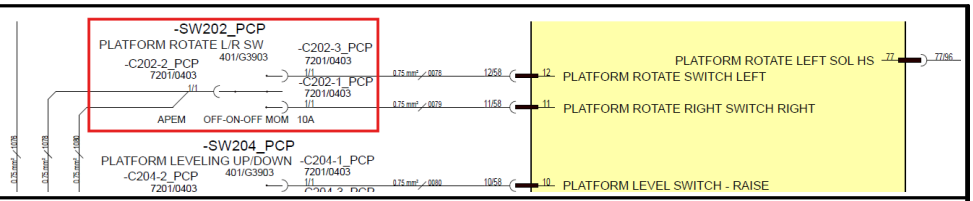
Testing:	Important: Use the multi-meter on the harness connector pins. DO NOT USE the meter on the ECU pins 1. There are 3 contact on the back of switch. 2. Check terminal 1, 2 & 3 connected correctly with wiring harness terminal 1,2 & 3 respectively. 3. Terminal 2 is for incoming supply 4. Check continuity between ‘terminal 2 & terminal 3’ and ‘terminal 2 & terminal 1’. It should not buzz 5. When switch is pressed up. Terminal 2 should buzz with bottom terminal & when switch is pressed down. Terminal 2 should buzz with up terminal. 6. Check supply at terminal 2. It should read 10V. 7. If there is no 10V then investigate wiring as per schematic. 8. If there is 10V available and continuity is OK then it should be internal damage to switch. Replace it
Expected Values:	
Related Fault Codes:	

Fault Code	Description
B1257-17	PLATFORM ROTATE RIGHT Switch SC to High
B1258-17	PLATFORM ROTATE LEFT Switch SC to High
B1259-92	PLATFORM ROTATE RIGHT & LEFT Switches both activated (5 - 10
B1260-16	PLATFORM ROTATE RIGHT Switch SC to Low
B1261-16	PLATFORM ROTATE LEFT Switch SC to Low

4.39.12 Platform Leveling Up/Down Switch(PCP)

Component:	Platform Leveling Up/Down Switch(PCP)
Function:	• This switch is to operate the platform leveling in either raise or lower positioning from the platform control station.

© 2025 Enter your company name

<table>
<tr><td></td><td>

- This switch is and on-off-on switch.
- The foot pedal is required to enable operation.

</td></tr>
<tr><td>Location:</td><td>On Platform Control Box</td></tr>
<tr><td>Location Image:</td><td>
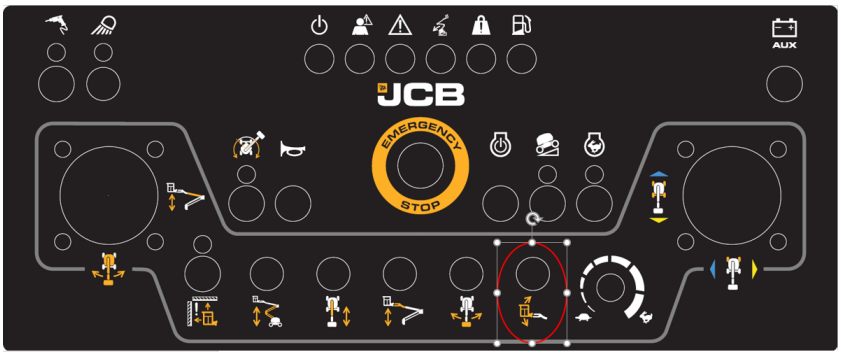



</td></tr>
<tr><td>Signal:</td><td>
<table>
<tr><th>Pin Number</th><th>Description/ Signal</th><th>Connector number</th><th>Wire number(s)</th><th>Voltage with switch unpressed</th><th>Voltage with switch pressed</th></tr>
<tr><td>1</td><td>Leveling raise</td><td>C204-1_PCP</td><td>80</td><td>2.7 V</td><td>10V</td></tr>
<tr><td>2</td><td>Power in (10V)</td><td>C204-2_PCP</td><td>1065</td><td>10V</td><td>NA</td></tr>
<tr><td>3</td><td>Leveling lower</td><td>C204-3_PCP</td><td>81</td><td>2.7V</td><td>10V</td></tr>
</table>
</td></tr>
</table>

© 2025 Enter your company name

Wires & Connectors:	  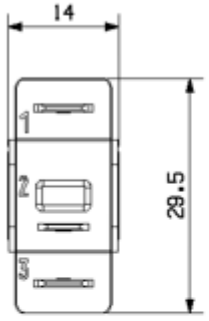 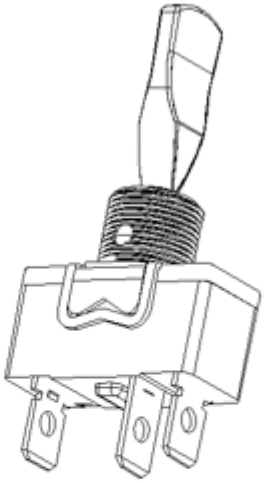 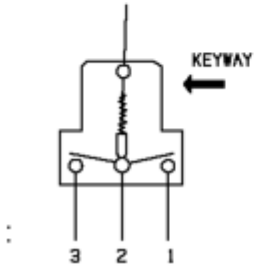 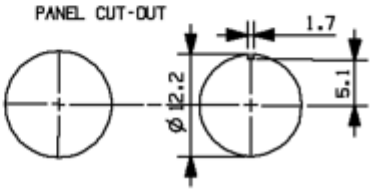

© 2025 Enter your company name

Internal Electrical Schematic:	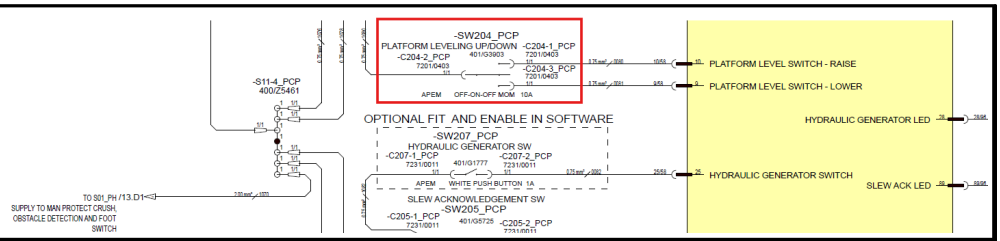
Testing:	Important: Use the multi-meter on the harness connector pins. DO NOT USE the meter on the ECU pins 1. There are 3 contact on the back of switch. 2. Check terminal 1, 2 & 3 connected correctly with wiring harness terminal 1,2 & 3 respectively. 3. Terminal 2 is for incoming supply 4. Check continuity between ‘terminal 2 & terminal 3’ and ‘terminal 2 & terminal 1’. It should not buzz 5. When switch is pressed up. Terminal 2 should buzz with bottom terminal & when switch is pressed down. Terminal 2 should buzz with up terminal. 6. Check supply at terminal 2. It should read 10V. 7. If there is no 10V then investigate wiring as per schematic. 8. If there is 10V available and continuity is OK then it should be internal damage to switch. Replace it.
Expected Values:	
Related Fault Codes:	**Fault Code** / **Description** B1242-17 — PLATFORM LEVELING RAISE Switch SC to High B1243-17 — PLATFORM LEVELING LOWER Switch SC to High B1244-92 — PLATFORM LEVELING RAISE and LOWER Switches both activated B1245-16 — PLATFORM LEVELING RAISE Switch SC to Low B1246-16 — PLATFORM LEVELING LOWER Switch SC to Low

4.39.13 Potentiometer

Component:	Potentiometer
Function:	• The potentiometer is used to alter the speeds of the machine functions by the operator.

© 2025 Enter your company name

<table>
<tr><td></td><td>

- This will only effect controls at the platform control panel.

</td></tr>
<tr><td>Location:</td><td>On Platform Control Box</td></tr>
<tr><td>Location Image:</td><td>
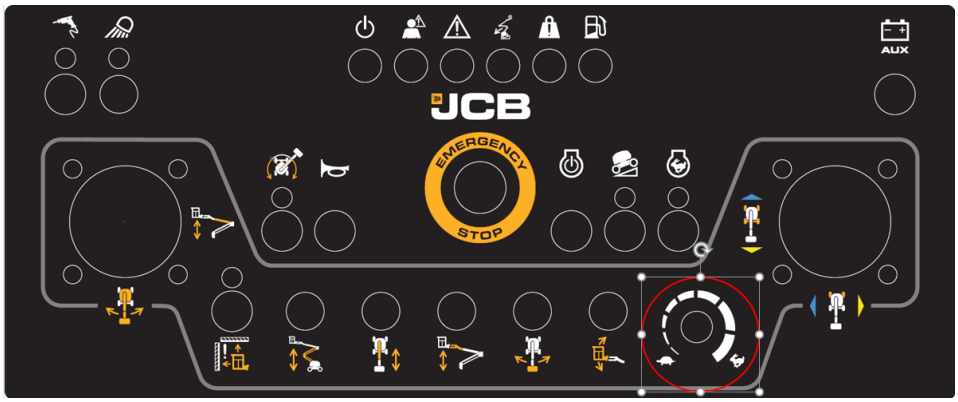



</td></tr>
<tr><td>Signal:</td><td>
<table>
<tr><th>Pin Number</th><th>Description</th><th>Wire Number</th></tr>
<tr><td>1</td><td>5V GND</td><td>4074</td></tr>
<tr><td>2</td><td>Signal output</td><td>4075</td></tr>
<tr><td>3</td><td>5V +VE feed</td><td>6027</td></tr>
</table>
</td></tr>
<tr><td>Wires & Connectors:</td><td>
The potentiometer has 3 fully insulated push on terminals that mate with the potentiometer connections

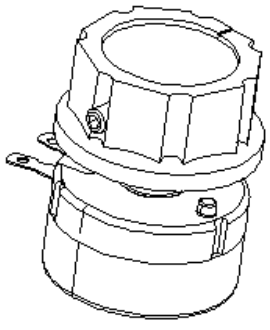

</td></tr>
</table>

© 2025 Enter your company name

Internal Electrical Schematic:	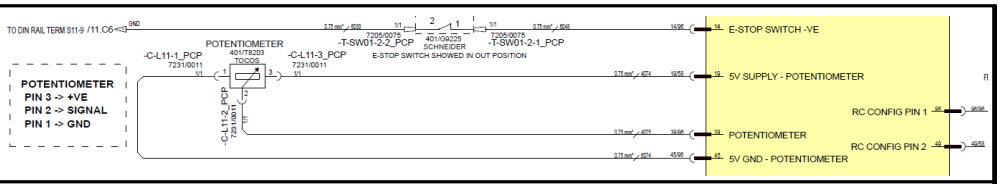
Testing:	Important: Use the multi-meter on the harness connector pins. DO NOT USE the meter on the ECU pins 1. Ensure no water ingress inside the potentiometer fitted on platform control panel plate 2. Check Pin3 (C-L11-3) for positive, Pin 2 (C-L11-2) signal , Pin 1 C-L11-1)is input – ground The potentiometer is a voltage divider circuit as shown below 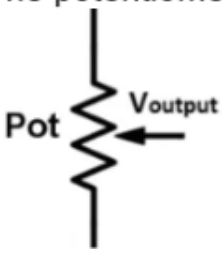 3. Check the voltage at Pin 2 (C-L11-2) & Pin 1 (C-L11-1) it should vary by rotating the potentiometer knob (should be between 0.5V to 4.5V) 4. If it is not varying check the supply voltage between Pin C-L11-1 Pin 1 C-L11-3. This should read 5V 5. If there is no input voltage then investigate wiring as per schematic 6. If input voltage is available and out put voltage is not , it might be internal damage to potentiometer , replace it.
Expected Values:	
Related Fault Codes:	<table><tr><th>Fault Code</th><th>Description</th></tr><tr><td>B1067-17</td><td>Potentiometer is short circuit to high >5.5V</td></tr></table>

4.39.14 Slew Acknowledgement Switch with LED

Component:	Slew Acknowledgment Switch with LED
Function:	• The push button is so the operator can acknowledge that the machine has been slewed around and the drive/ steer directions may be reverse.

© 2025 Enter your company name

<table>
<tr><td></td><td>

- All drive operation will be cut until the operator has enabled this button.
- The LED above the switch will flash to show the operator that it is required
- The button is a momentary push button.

</td></tr>
<tr><td>Location:</td><td>On Platform Control Box</td></tr>
<tr><td>Location Image:</td><td>
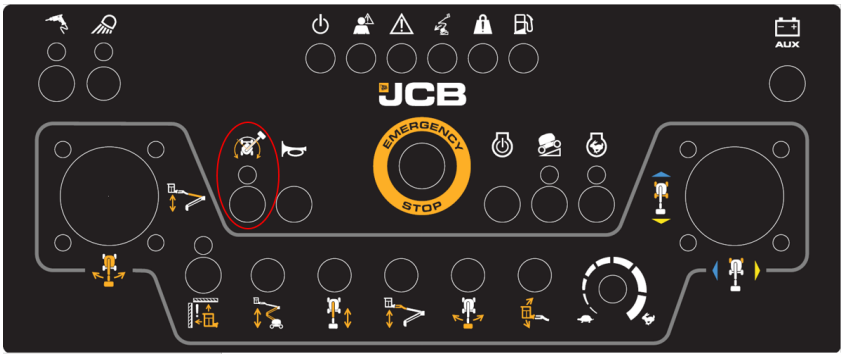



</td></tr>
<tr><td>Signal:</td><td>
<table>
<tr><th>Pin Number</th><th>Description</th><th>Connector number</th><th>Wire number</th><th>Voltage unpressed</th><th>Voltage pressed</th></tr>
<tr><td>1</td><td>10V Feed In</td><td>C205-1</td><td>1066, 1067</td><td>10V</td><td>NA</td></tr>
<tr><td>2</td><td>Signal to ECU (10V when pressed)</td><td>C205-2</td><td>83</td><td></td><td>10V</td></tr>
</table>
</td></tr>
</table>

© 2025 Enter your company name

Wires & Connectors:



ISOMETRIC VIEW

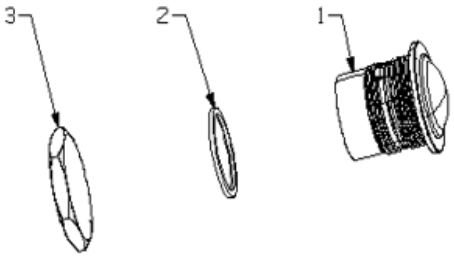

ASSYEMBLY SEQUENCE FOR PUSH BUTTON
1 - PUSHBUTTON FROM OUTSIDE THE PANEL
2 - WASHER FROM INSIDE THE PANEL
3 - HEX NUT FROM INSIDE THE PANEL

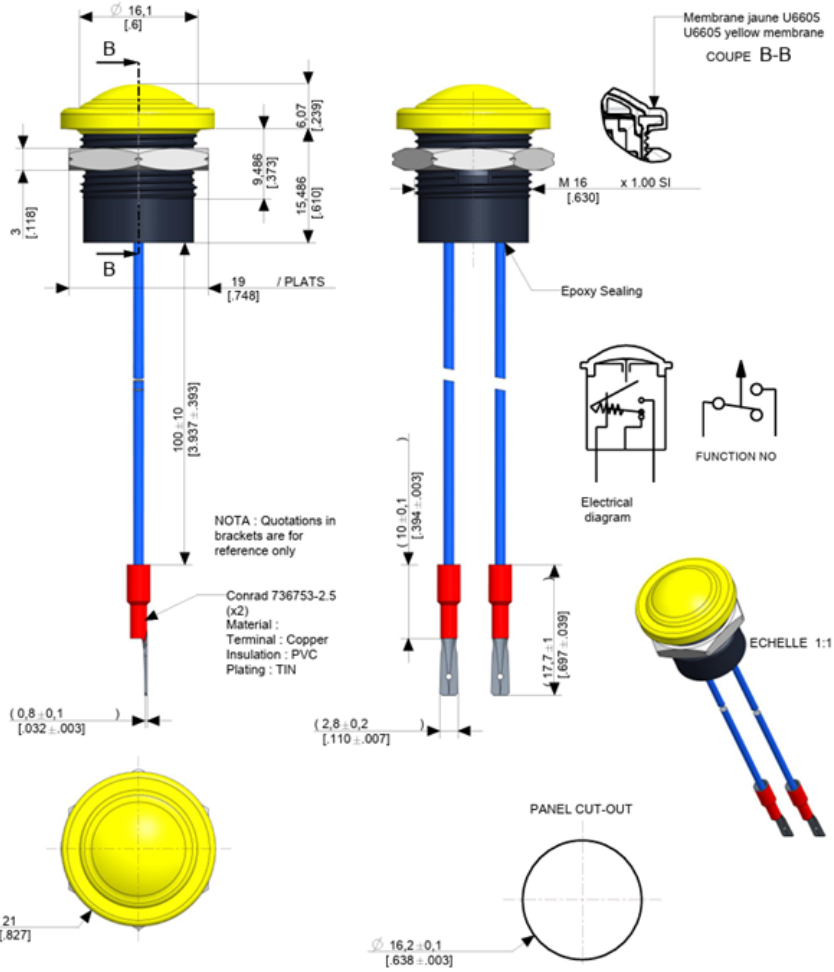

© 2025 Enter your company name

Internal Electrical Schematic:	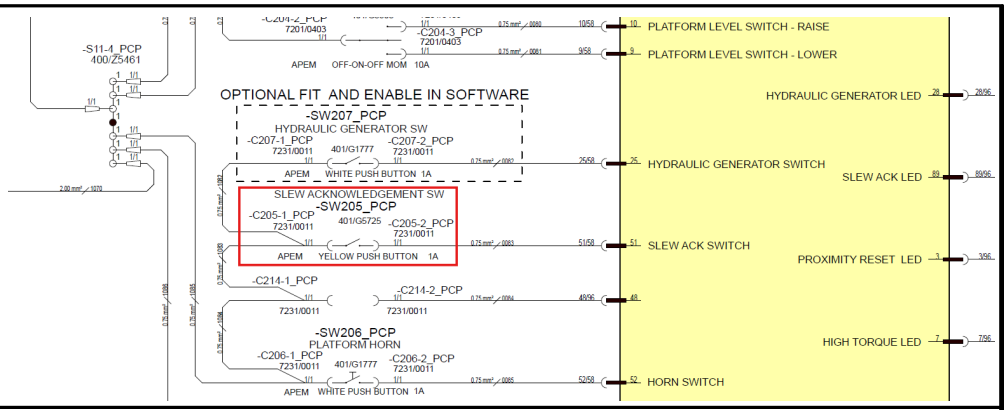
Testing:	Important: Use the multi-meter on the harness connector pins. DO NOT USE the meter on the ECU pins 1. Note-All the bush button fitted on machine are 10V ,normally open and closed when pressed Diagnostic feedback on push button are coming from ECU 1. Check supply at wiring harness terminal-1 with (respect to ground) on push button (when not pressed). It should read 10V. 2. Check the voltage at wiring harness terminal-2 on push button (When not pressed). It should read 2-3V 3. Check the continuity between terminal 1 & 2 after pressing the push button. It should buzz. 4. If there is continuity and we are getting 10V supply then it may be internal damage to push button. 5. If issue still there replace the push button.
Expected Values:	
Related Fault Codes:	<table><tr><th>Fault Code</th><th>Description</th></tr><tr><td>B1064-17</td><td>Slew Acknowledgment switch is short circuit to high</td></tr><tr><td>B1065-16</td><td>Slew acknowledgment switch is short circuited to low</td></tr><tr><td>B1066-24</td><td>Slew acknowledgment switch is stuck on for longer than 10 seconds</td></tr></table>

4.39.15 Horn Switch(PCP)

Component:	Horn Switch(PCP)

© 2025 Enter your company name

Function:	• Horn switch is for audible warning that the operator can use • The horn is located at the base of the machine.
Location:	On Platform Control Box
Location Image:	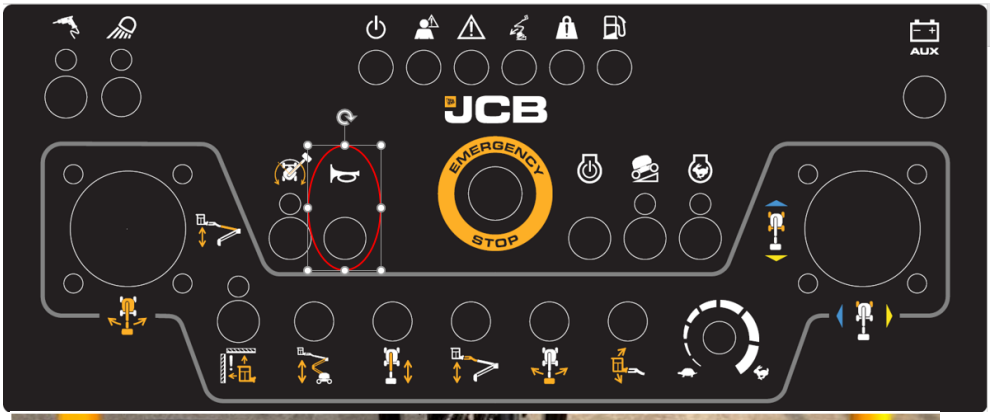 
Signal:	

Pin Number	Description	Connector number	Wire number(s)	Voltage unpressed	Voltage pressed
1	10V input	C206-1_PCP	1068, 1060	10V	NA
2	Signal output to ECU (10V when pressed)	C206-2_PCP	85		10V

© 2025 Enter your company name

Wires & Connectors:



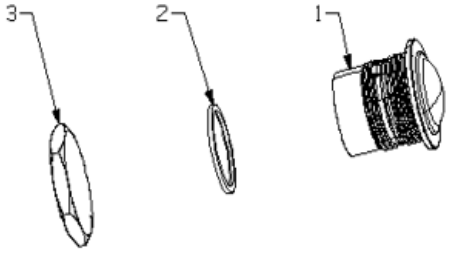

ISOMETRIC VIEW

ASSYEMBLY SEQUENCE FOR PUSH BUTTON
1 - PUSHBUTTON FROM OUTSIDE THE PANEL
2 - WASHER FROM INSIDE THE PANEL
3 - HEX NUT FROM INSIDE THE PANEL

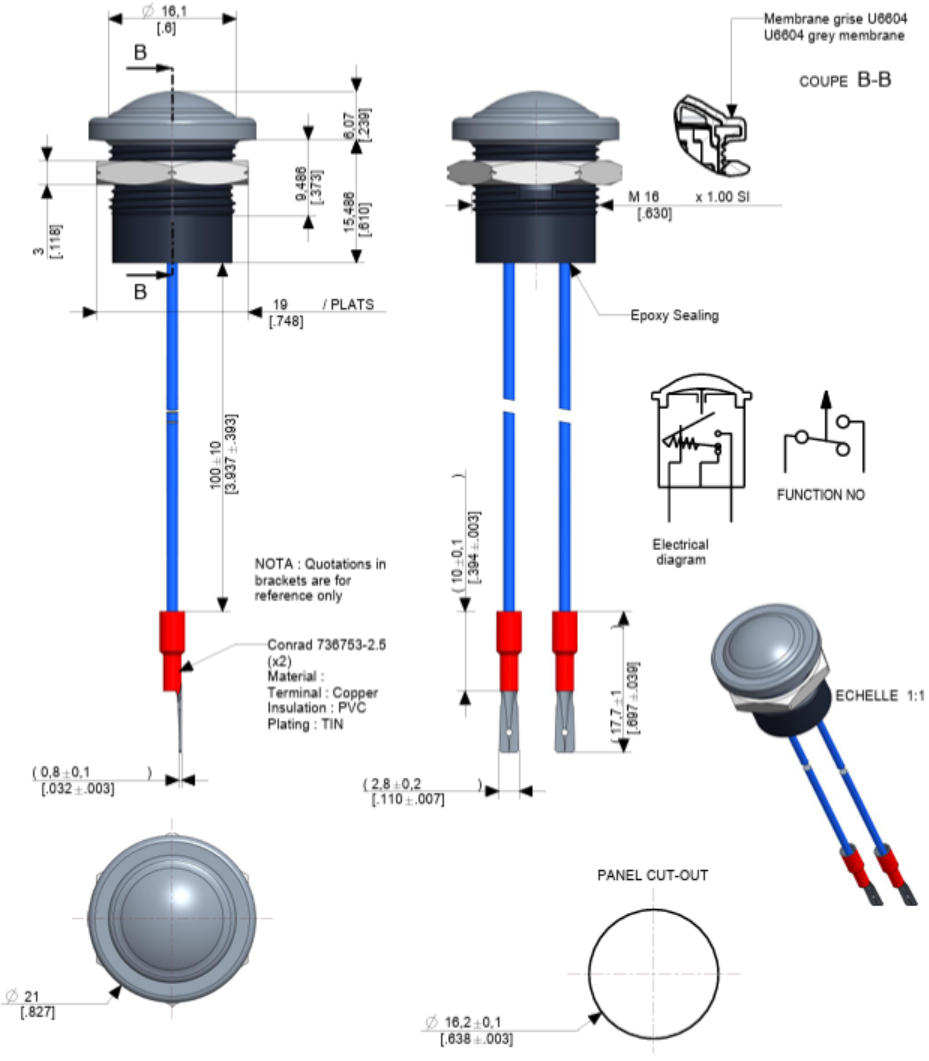

© 2025 Enter your company name

Internal Electrical Schematic:	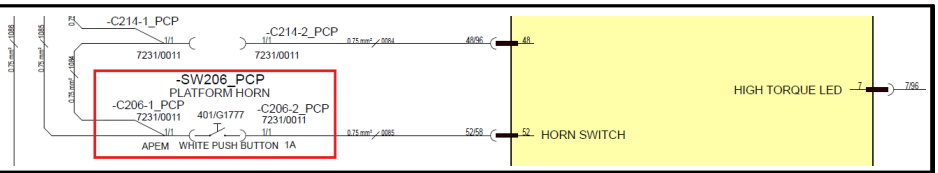
Testing:	1. Check horn button in platform is not stuck on remove horn button and check continuity. 2. Check wire code 0085 for voltage.
Expected Values:	
Related Fault Codes:	

Fault Code	Description
B1273-17	Horn button as the base control station is short circuit to h
B1274-16	Horn button at base controller is short circuit to ground
B1275-24	Horn button at the base is stuck in for longer than 10 seco

4.39.16 Emergency Stop Switch(PCP)

Component:	Emergency Stop Switch(PCP)
Function:	• The E-stop is there for the operator to stop any functioning with immediate action. • This will stop all functions at the base and platform controls stations. • The E-stop will cut the engine but it is not to be used to power down the machine. The machine is still powered on with the E-stop pressed. • The E-stop uses x2 NC contacts that open when pressed.
Location:	On Platform Control Box

© 2025 Enter your company name

Location Image:

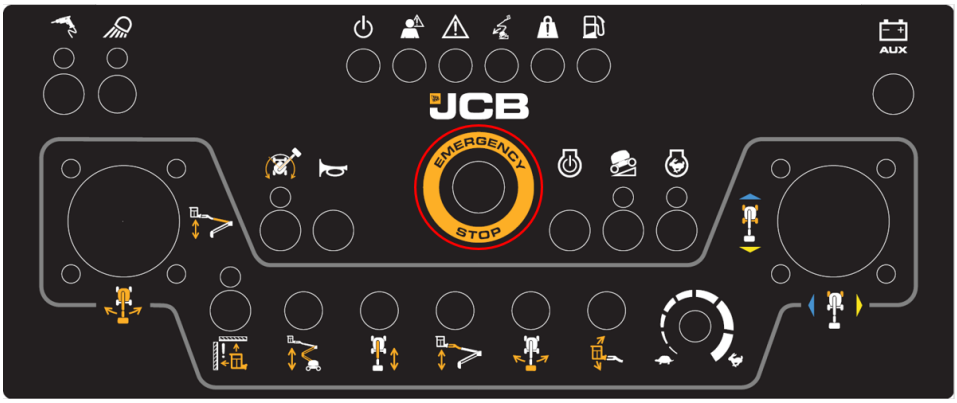



Signal:

Pin Number and contactor block	Description	Connector number	Wire number	Voltage unpressed	Voltage pressed
contact 1 NC pin 1	12V feed	T-SW-01-1-1_PCP	1054	12V	NA
contact 1 NC pin 2	Output to platform ECU	T-SW-01-1-2_PCP	68		12V
contact 2 NC pin 1	GND feed	T-SW-01-2-2_PCP	6024	GND	NA
contact 2 NC pin 2	Output to ECU	T-SW-01-2-1_PCP	69		GND

Wires & Connectors:

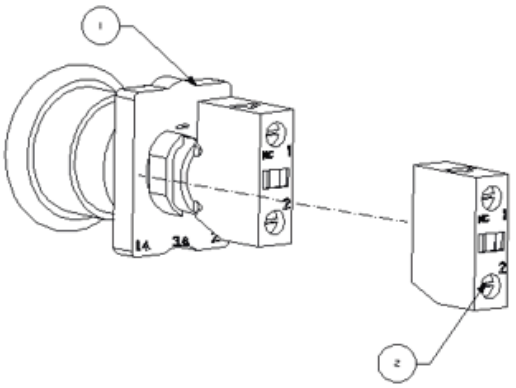



© 2025 Enter your company name

Internal Electrical Schematic:	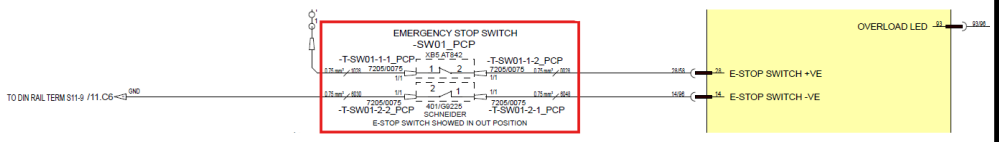
Testing:	Important: Use the multi-meter on the harness connector pins. DO NOT USE the meter on the ECU pins 1. Do the below steps for both contacts separately. 2. Take multimeter and check the multi meter is working 3. Set the multimeter in continuity mode (Sound wave or Diode or both) 4. Place the red probe on one of the terminal on the switch and black probe on other terminal on the switch 5. In E-Stop switch in PUSHED IN state, Multimeter should read as 'OL' (open circuit) 6. In E-Stop switch in OUT state, Multimeter should read as '1' or less. 7. Operate the switch in PUSHED IN and OUT state in few more times. Multimeter reading should change while operating from PUSHED IN to OUT. If the reading doesn't change means E-Stop switch is defective 8. Replace the defective E-Stop switch with same type and size, please contact JCB Service department.
Expected Values:	
Related Fault Codes:	<table><tr><th>Fault Code</th><th>Description</th></tr><tr><td>B1235-17</td><td>E-Stop Plausibility Check</td></tr></table>

4.39.17 Engine Start Switch(PCP)

Component:	Engine Start Switch(PCP)
Function:	• This button is used to start the engine on the machine. • The ignition key must be in the on position, and platform enabled (default position) • The foot pedal should NOT be pressed to make an engine start.
Location:	On Platform Control Box

© 2025 Enter your company name

Location Image:

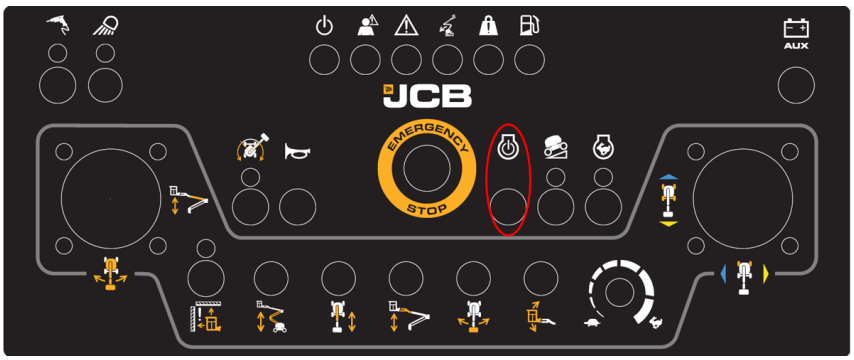



Signal:

Pin Number	Description	Connector number	Wire number(s)	Voltage unpressed	Voltage pressed
1	10V input	C212-1_PCP	1069, 1061	10V	NA
2	Signal output to ECU (10V when pressed, momentary)	C212-2_PCP	86		10V

© 2025 Enter your company name

Wires & Connectors:



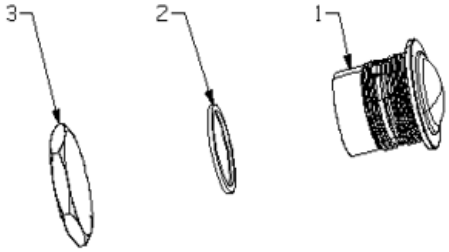

ASSYEMBLY SEQUENCE FOR PUSH BUTTON
1 - PUSHBUTTON FROM OUTSIDE THE PANEL
2 - WASHER FROM INSIDE THE PANEL
3 - HEX NUT FROM INSIDE THE PANEL

ISOMETRIC VIEW

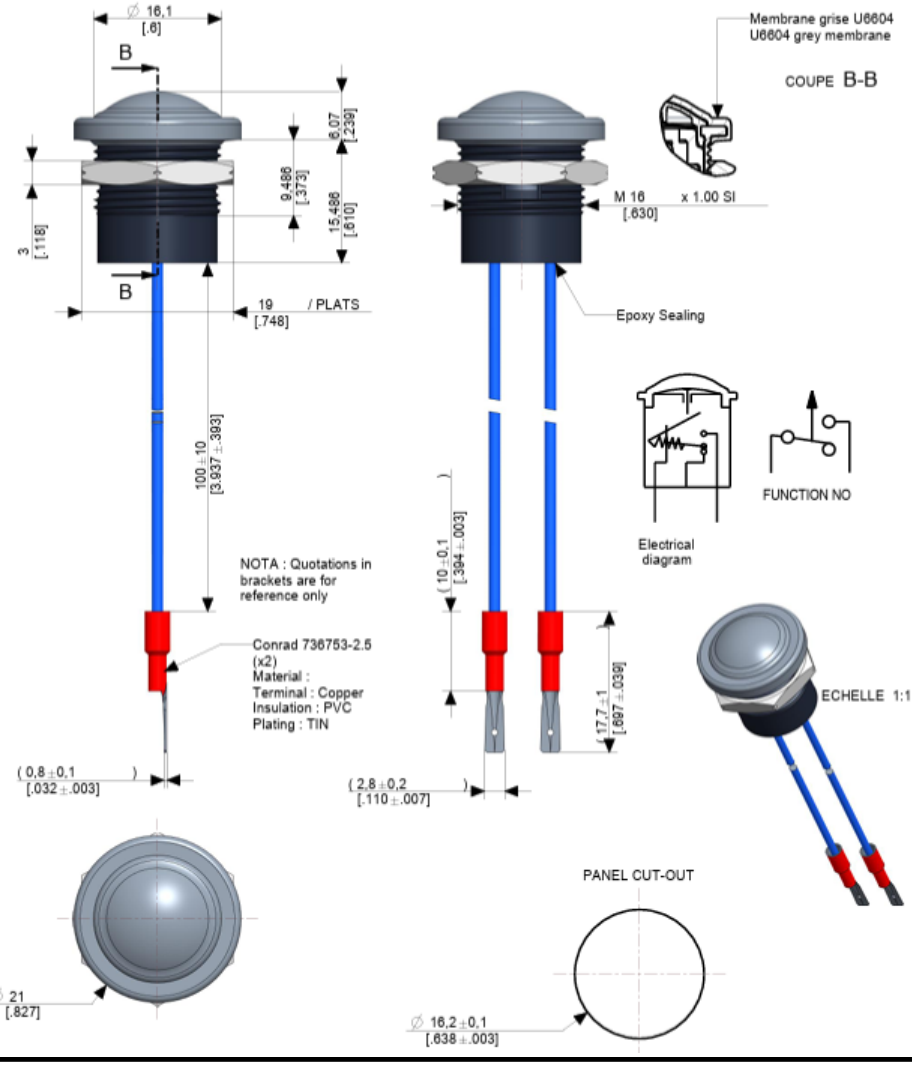

© 2025 Enter your company name

Internal Electrical Schematic:	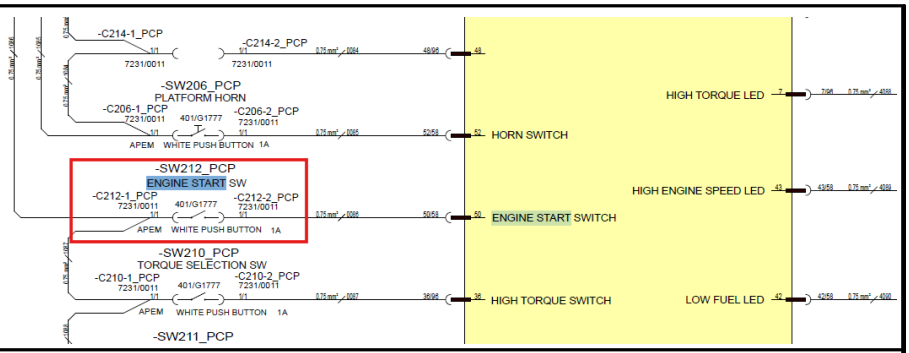
Testing:	Important: Use the multi-meter on the harness connector pins. DO NOT USE the meter on the ECU pins 1. Note-All the bush button fitted on machine are 10V ,normally open and closed when pressed Diagnostic feedback on push button are coming from ECU 1. Check supply at wiring harness terminal-1 with (respect to ground) on push button (when not pressed). It should read 10V. 2. Check the voltage at wiring harness terminal-2 on push button (When not pressed). It should read 2-3V 3. Check the continuity between terminal 1 & 2 after pressing the push button. It should buzz. 4. If there is continuity and we are getting 10V supply then it may be internal damage to push button. 5. If issue still there replace the push button.
Expected Values:	
Related Fault Codes:	**Fault Code** / **Description** B1239-17 / ENGINE START BUTTON SC to High B1240-16 / ENGINE START BUTTON SC to Low B1241-24 / ENGINE START BUTTON Stuck for >= 10 seconds

4.39.18 High Torque Selection Switch with LED

Component :	High Torque Selection Switch with LED
Function:	• The ignition key must be in the on position enabled. • The Push button is used to start the High Torque.

© 2025 Enter your company name

<table>
<tr><td></td><td>

- The Push button allow us to power the circuit when we press the button.

</td></tr>
<tr><td>Location:</td><td>On Platform Control Box</td></tr>
<tr><td>Location Image:</td><td>
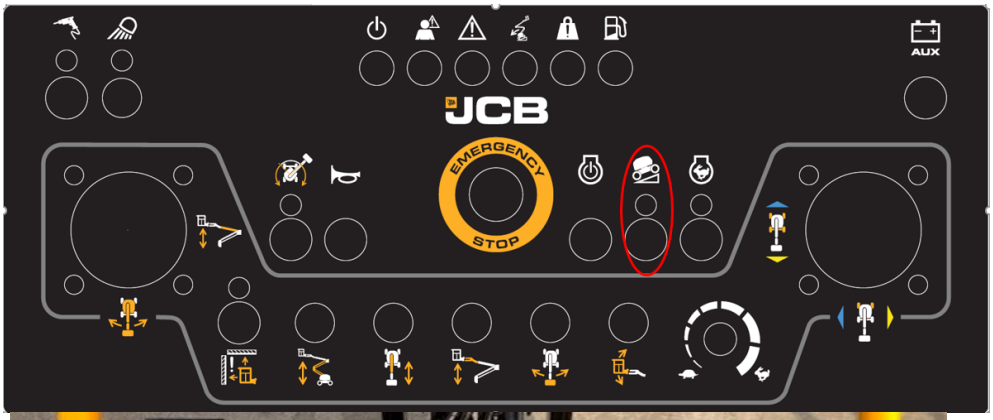



</td></tr>
<tr><td>Signal:</td><td>
<table>
<tr><th>Pin Number</th><th>Description</th><th>Connector number</th><th>Wire number(s)</th><th>Voltage unpressed</th><th>Voltage pressed</th></tr>
<tr><td>1</td><td>10V input</td><td>C210-1_PCP</td><td>1069, 1070</td><td>10V</td><td>NA</td></tr>
<tr><td>2</td><td>Signal output to ECU (10V when pressed, momentary)</td><td>C210-2_PCP</td><td>87</td><td></td><td>10V</td></tr>
</table>
</td></tr>
</table>

© 2025 Enter your company name

Wires & Connectors:

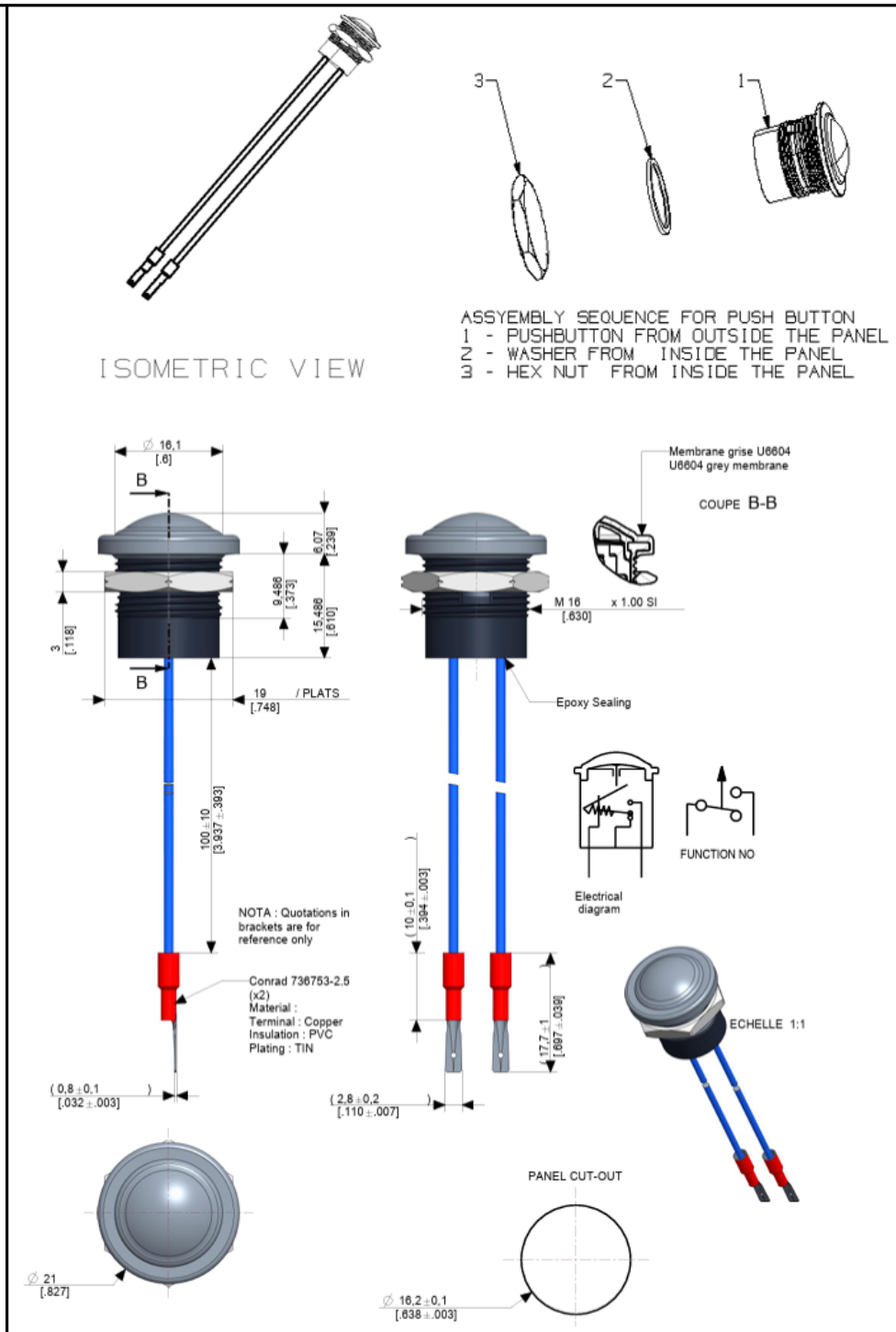

Internal Electrical Schematic:

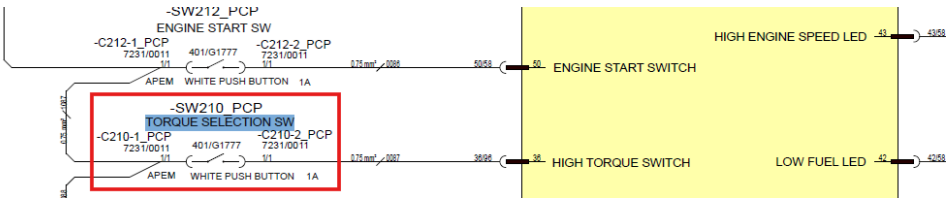

© 2025 Enter your company name

<table>
<tr><td>Testing:</td><td>Important: Use the multi-meter on the harness connector pins. DO NOT USE the meter on the ECU pins

1. Note-All the bush button fitted on machine are 10V ,normally open and closed when pressed

Diagnostic feedback on push button are coming from ECU

1. Check supply at wiring harness terminal-1 with (respect to ground) on push button (when not pressed). It should read 10V.

2. Check the voltage at wiring harness terminal-2 on push button (When not pressed). It should read 2-3V

3. Check the continuity between terminal 1 & 2 after pressing the push button. It should buzz.

4. If there is continuity and we are getting 10V supply then it may be internal damage to push button.

5. If issue still there replace the push button.</td></tr>
<tr><td>Expected Values:</td><td></td></tr>
<tr><td>Related Fault Codes:</td><td><table><tr><th>Fault Code</th><th>Description</th></tr><tr><td>B1202-16</td><td>HIGH TORQUE LED SC to Low</td></tr><tr><td>B1203-13</td><td>HIGH TORQUE LED OC</td></tr></table></td></tr>
</table>

4.39.19 High Speed Switch with LED

Component:	High Speed Switch with LED
Function:	• The Push button is used to start the High speed with LED. • The Push button allow us to power the circuit when we press the button.
Location:	On Platform Control Box

© 2025 Enter your company name

Location Image:

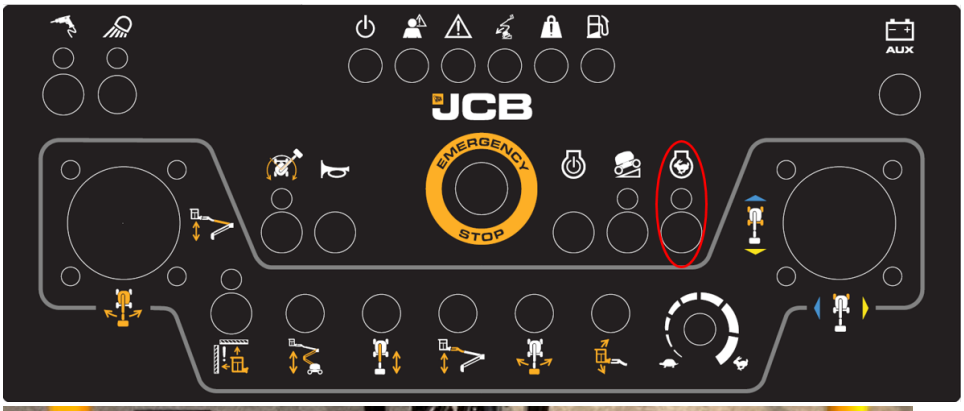



Signal:

Pin Number	Description	Connector number	Wire number(s)	Voltage unpressed	Voltage pressed
1	10V input	C211-1 PCP	1070, 1071	10V	NA
2	Signal output to ECU (10V when pressed)	C211-2 PCP	88		10V

© 2025 Enter your company name

Wires & Connectors:

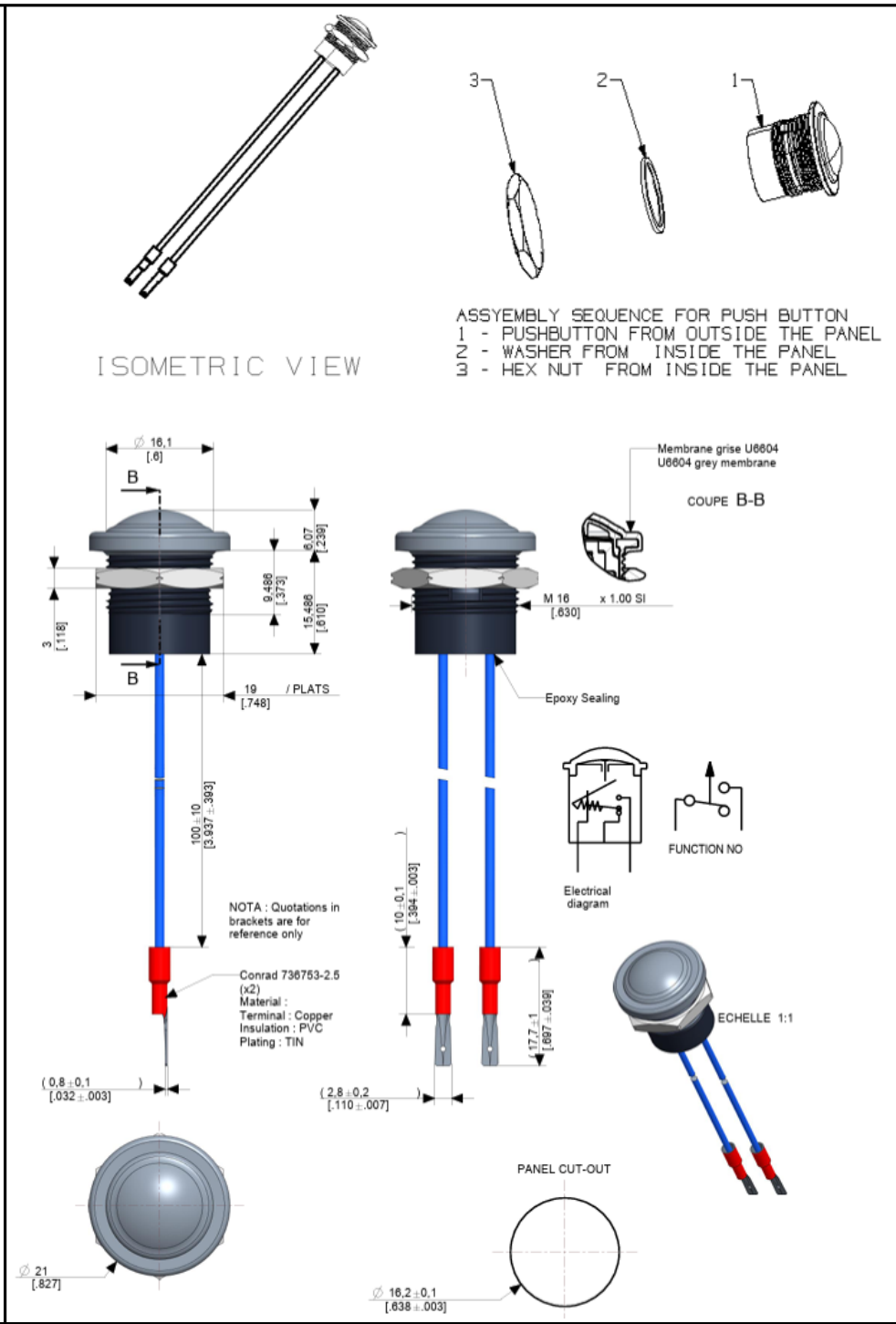

Internal Electrical Schematic:

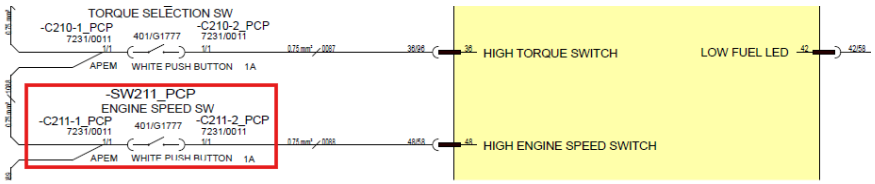

© 2025 Enter your company name

<table>
<tr><td>Testing:</td><td>Important: Use the multi-meter on the harness connector pins. DO NOT USE the meter on the ECU pins

1. Note-All the bush button fitted on machine are 10V ,normally open and closed when pressed

Diagnostic feedback on push button are coming from ECU

1. Check supply at wiring harness terminal-1 with (respect to ground) on push button (when not pressed). It should read 10V.

2. Check the voltage at wiring harness terminal-2 on push button (When not pressed). It should read 2-3V

3. Check the continuity between terminal 1 & 2 after pressing the push button. It should buzz.

4. If there is continuity and we are getting 10V supply then it may be internal damage to push button.

5. If issue still there replace the push button.</td></tr>
<tr><td>Expected Values:</td><td></td></tr>
<tr><td>Related Fault Codes:</td><td><table><tr><th>Fault Code</th><th>Description</th></tr><tr><td>B1204-16</td><td>HIGH ENGINE SPEED LED SC to Low</td></tr><tr><td>B1205-13</td><td>HIGH ENGINE SPEED LED OC</td></tr></table></td></tr>
</table>

4.39.20 Hydraulic Generator Switch with LED

Component:	Hydraulic Generator Switch with LED
Function:	• The Push button allow us to power the circuit when we press the button. • The Push button is used to start the Hydraulic generator switch with LED.
Location:	On Platform Control Box

© 2025 Enter your company name

Location Image:

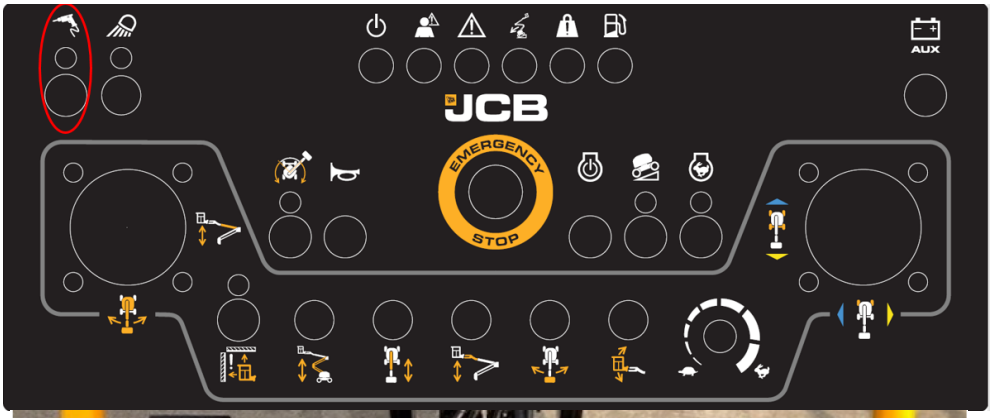



Signal:

Pin Number	Description	Wire Number
1	10V input	1082
2	Signal output to ECU (10V when pressed)	82

© 2025 Enter your company name

Wires & Connectors:



ISOMETRIC VIEW

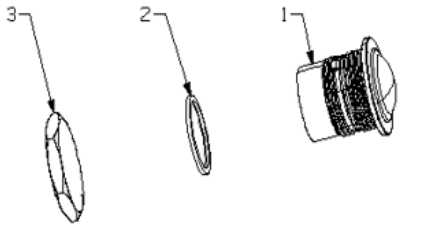

ASSYEMBLY SEQUENCE FOR PUSH BUTTON
1 - PUSHBUTTON FROM OUTSIDE THE PANEL
2 - WASHER FROM INSIDE THE PANEL
3 - HEX NUT FROM INSIDE THE PANEL

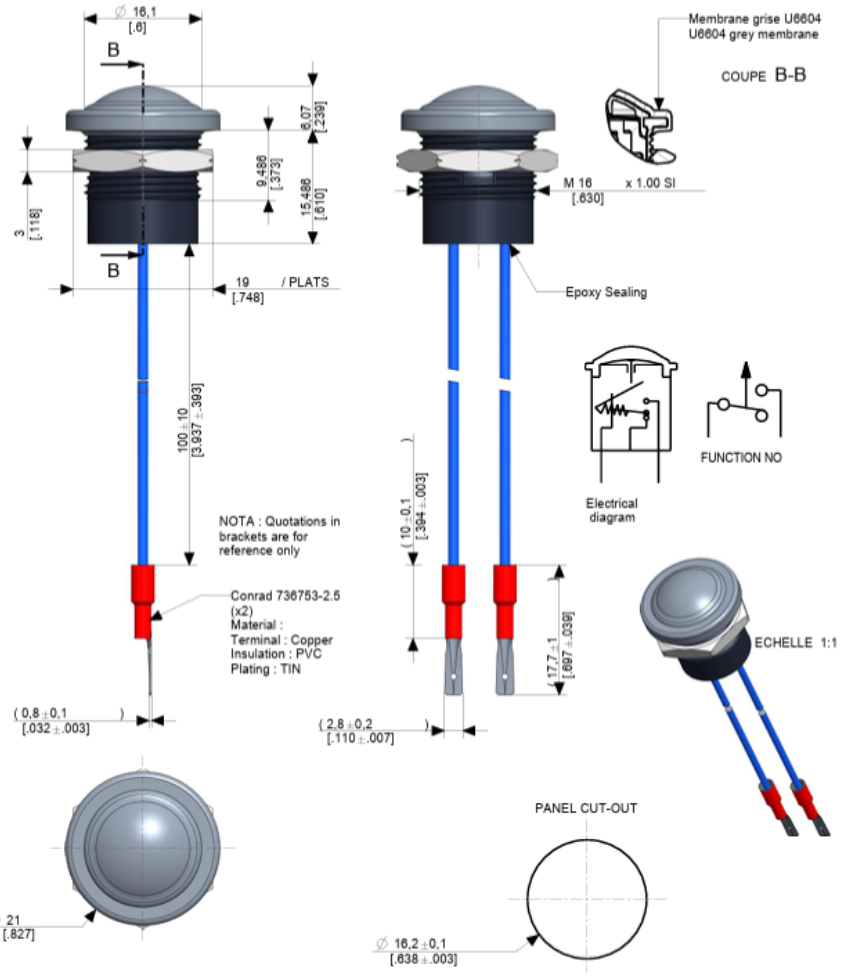

Internal Electrical Schematic:

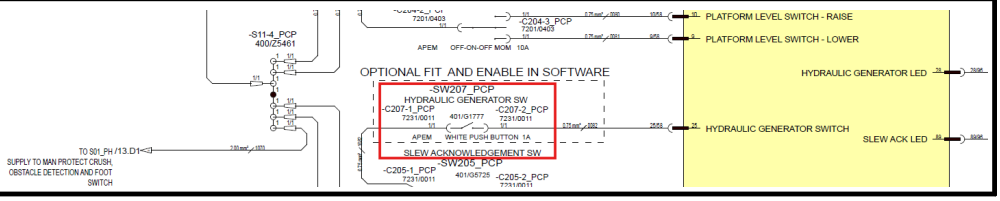

© 2025 Enter your company name

<table>
<tr><td>Testing:</td><td>Important: Use the multi-meter on the harness connector pins. DO NOT USE the meter on the ECU pins

1. Note-All the bush button fitted on machine are 10V ,normally open and closed when pressed

Diagnostic feedback on push button are coming from ECU

1. Check supply at wiring harness terminal-1 with (respect to ground) on push button (when not pressed). It should read 10V.

2. Check the voltage at wiring harness terminal-2 on push button (When not pressed). It should read 2-3V

3. Check the continuity between terminal 1 & 2 after pressing the push button. It should buzz.

4. If there is continuity and we are getting 10V supply then it may be internal damage to push button.

5. If issue still there replace the push button.</td></tr>
<tr><td>Expected Values:</td><td></td></tr>
<tr><td>Related Fault Codes:</td><td><table><tr><th>Fault Code</th><th>Description</th></tr><tr><td>B1186-16</td><td>HYDRAULIC GENERATOR LED SC to Low</td></tr><tr><td>B1187-13</td><td>HYDRAULIC GENERATOR LED OC</td></tr></table></td></tr>
</table>

4.39.21 Worklight Switch with LED

Component:	Work light Switch with LED
Function:	• This switch is optional fit and may not be fitted to all machines. • The Switch will turn on LED work lights at the platform. • The Lights will only work when the engine is running to avoid a battery drain condition and being stuck up in the air. • The LED will be active when the work lights are turned on.
Location:	On Platform Control Box

© 2025 Enter your company name

Location Image:

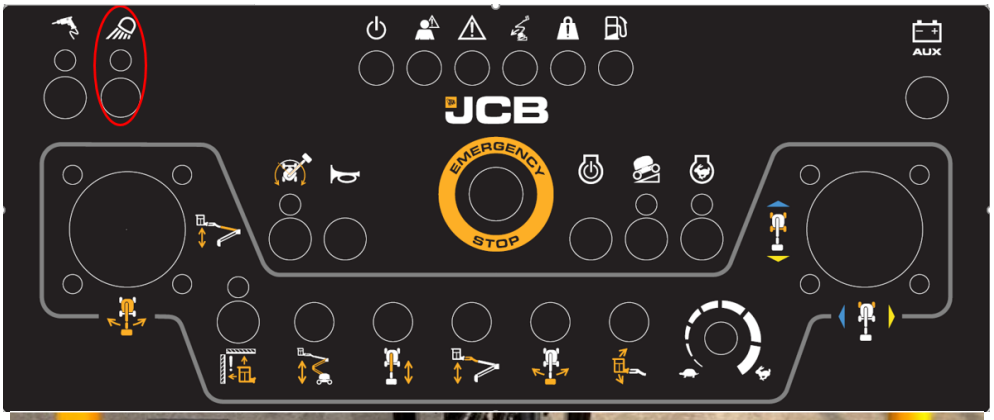



Signal:

Switch wiring

Pin Number	Description	Connector number	Wire number(s)	Voltage unpressed	Voltage pressed
1	12V input	C216-1_PCP	1031	12V	NA
2	Signal output	C216-2_PCP	8001	0V	12V

LED wiring

Pin Number	Description	Connector number	Wir
1	12V input from switch	C225-1_PCP	
2	GND	C225-2_PCP	

© 2025 Enter your company name

Wires & Connectors:

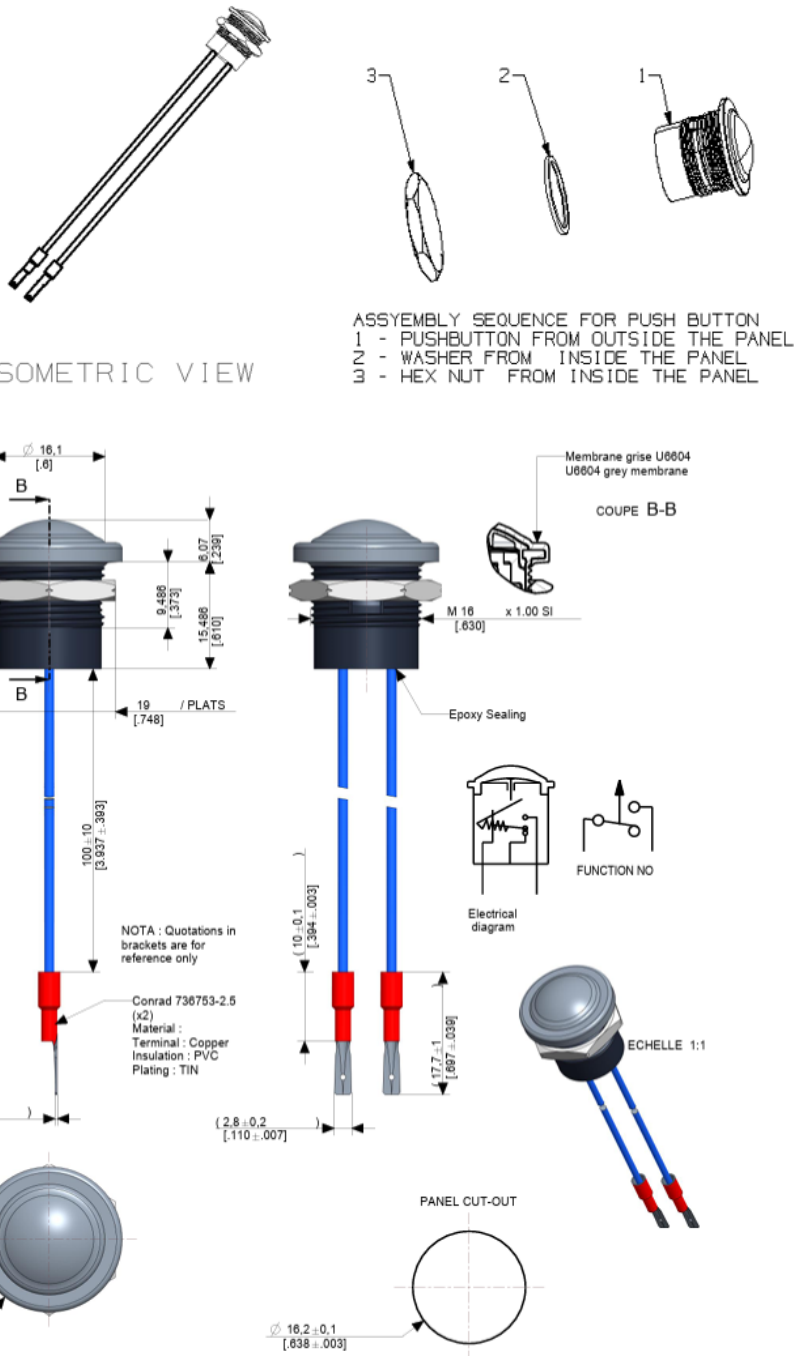

Internal Electrical Schematic:

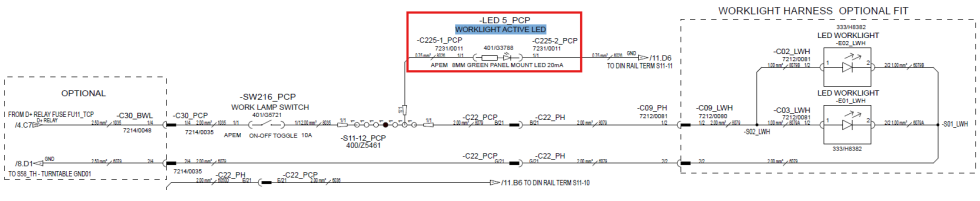

© 2025 Enter your company name

Testing:	Important: Use the multi-meter on the harness connector pins. DO NOT USE the meter on the ECU pins 1. Note-All the bush button fitted on machine are 10V ,normally open and closed when pressed Diagnostic feedback on push button are coming from ECU 1. Check supply at wiring harness terminal-1 with (respect to ground) on push button (when not pressed). It should read 10V. 2. Check the voltage at wiring harness terminal-2 on push button (When not pressed). It should read 2-3V 3. Check the continuity between terminal 1 & 2 after pressing the push button. It should buzz. 4. If there is continuity and we are getting 10V supply then it may be internal damage to push button. 5. If issue still there replace the push button.
Expected Values:	
Related Fault Codes:	

4.39.22 Electric Pump Switch (AUX)

Component:	Electric Pump Switch (AUX)
Function:	• To use the electric pump the engine can not be running • The foot pedal and this button along with function is required to operate the machine.
Location:	On Platform Control Box

© 2025 Enter your company name

Location Image:

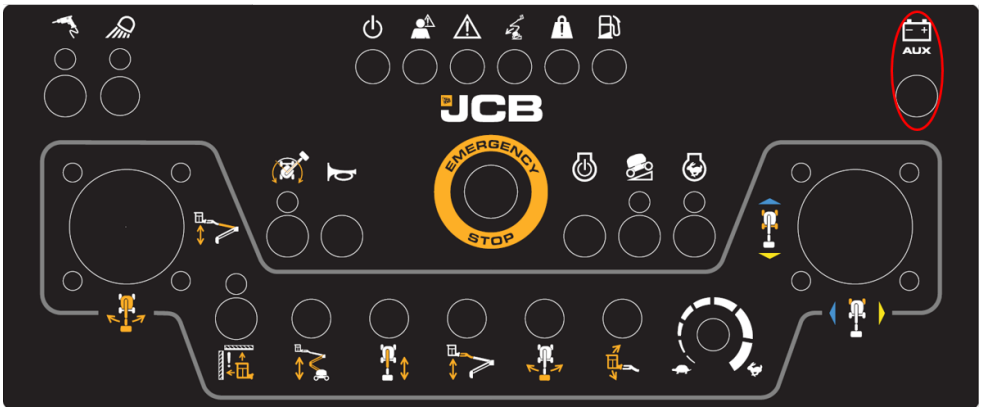



Signal:

Pin Number	Description	Connector number	Wire number(s)	Voltage unpressed	Voltage pressed
1	10V input	C211-1 PCP	1071	10V	NA
2	Signal output	C211-2 PCP	89		10V

© 2025 Enter your company name

Wires & Connectors:

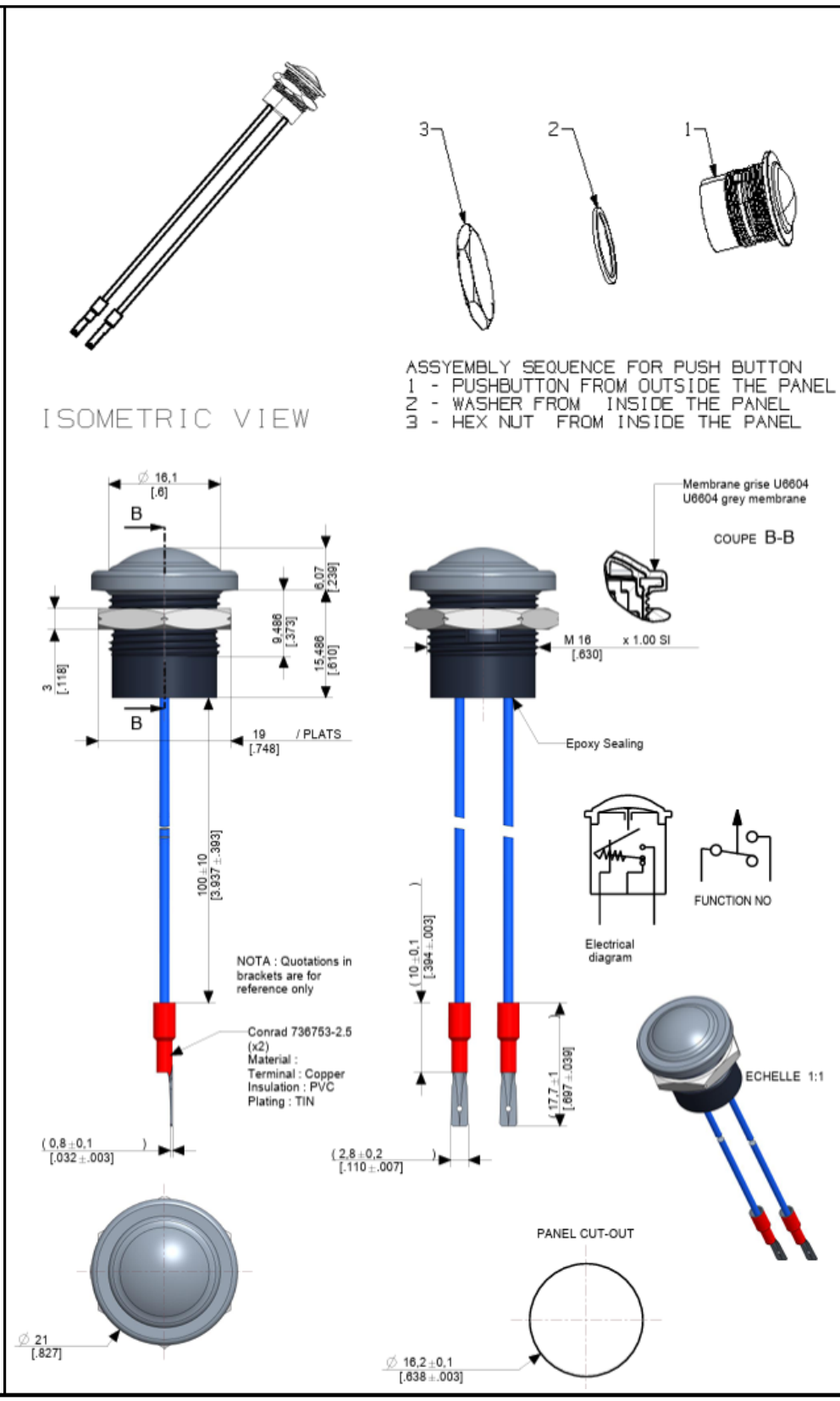

© 2025 Enter your company name

Internal Electrical Schematic:	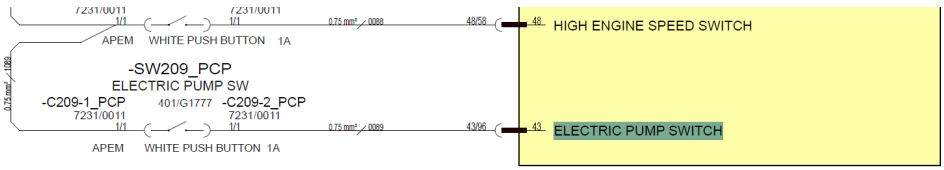
Testing:	1. Check the continuity between terminal 1 & 2 after pressing the push button. It should buzz. 2. Check Wire no. 1089 and 0089.
Expected Values:	
Related Fault Codes:	**Fault Code** / **Description** B1055-17 / Electric Pump button (AUX) at the platform short circuit to high B1056-16 / Electric Pump button (AUX) at the platform short circuit to low

4.39.23 Power LED

Component:	Power LED
Function:	This LED is to show when the ignition key is in the 'ON' position
Location:	On Platform Control Box

© 2025 Enter your company name

Location Image:

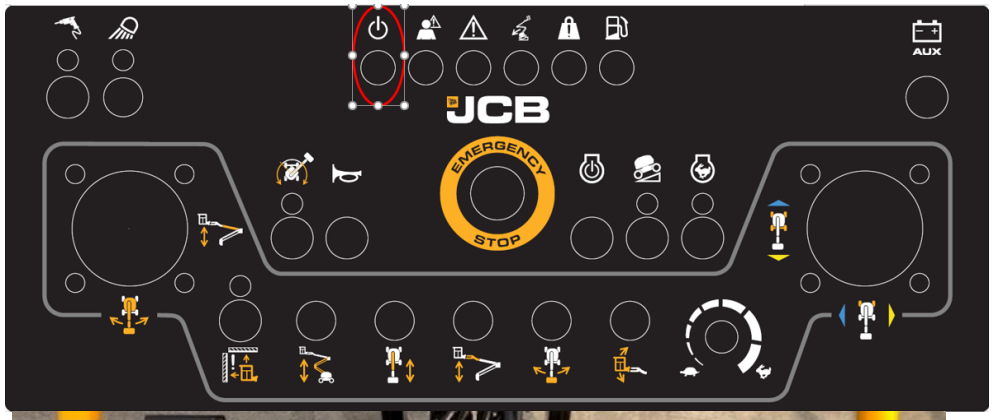



Signal:

Pin Number	Description	Colour of pin	Connector number	Wire number
1	Input	Gold	C38-1_PCP	4077
2	GND	Silver	C38-2_PCP	6030

Wires & Connectors:

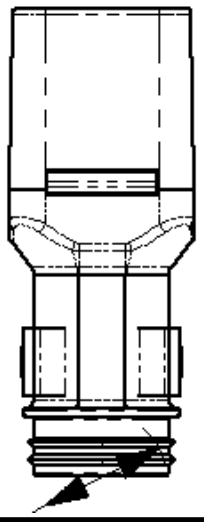

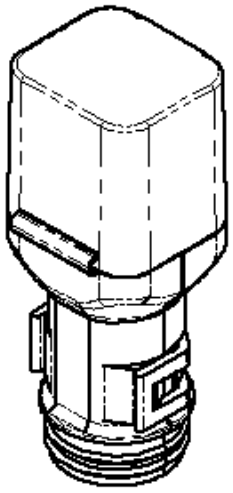

© 2025 Enter your company name

Internal Electrical Schematic:	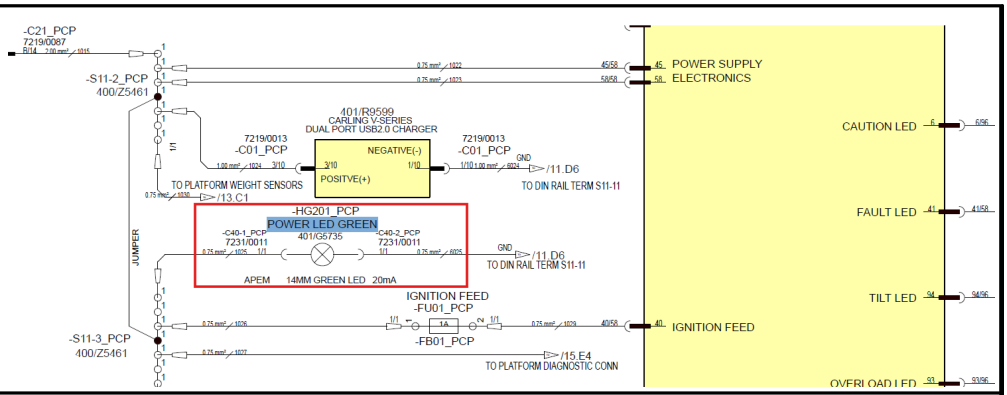
Testing:	Important: Use the multi-meter on the harness connector pins. DO NOT USE the meter on the ECU pins 1. All LED fitted on machines are 12V 2. Gold terminal is positive & silver terminal is negative 3. Check LED should not be broken 4. IF LED light up it could be the wiring issues 5. Check the continuity on gold (positive) terminal & silver (negative) terminal of LED 6. If continuity is there on both terminal then 7. Check 12volt supply by using a multi meter 8. Connect the live terminal to the positive multi meter probe and the negative probe directly to the a main earth point on the machine or the negative terminal of the battery. 9. If this shows voltage below 12 volts then follow the schematic and investigate where the break in the wire/ circuit is. 10. If 12 volt feed is coming next check the earth by placing the positive probe of the multi meter on the live feed of the led and the negative probe onto the earth feed to the led. 11. if this again reads 12 volts this indicate LED failure , replace with new LED.
Expected Values:	
Related Fault Codes:	

© 2025 Enter your company name

4.39.24 User Caution LED

<table>
<tr><td>Component :</td><td>User Caution LED</td></tr>
<tr><td>Function:</td><td>• The caution LED shall be set as base.
• This LED is to show the Error on machine.</td></tr>
<tr><td>Location:</td><td>On Platform Control Box</td></tr>
<tr><td>Location Image:</td><td> 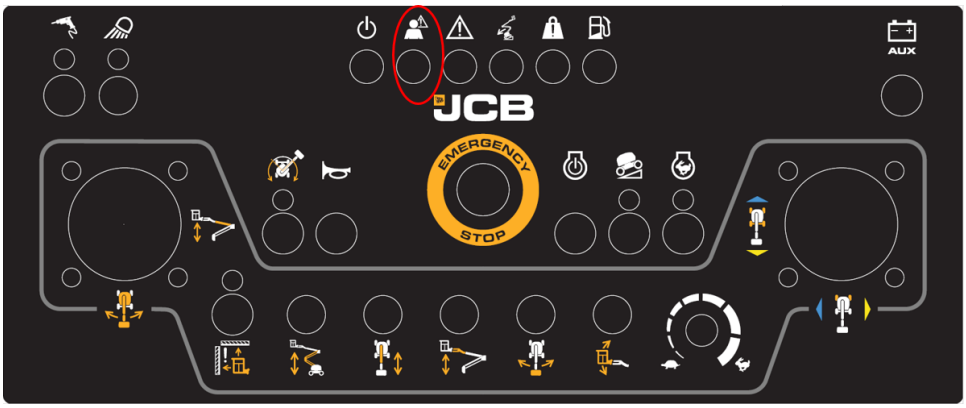


</td></tr>
<tr><td>Signal:</td><td>
<table>
<tr><th>Pin Number</th><th>Description</th><th>Colour of pin</th><th>Connector number</th><th>Wire number</th></tr>
<tr><td>1</td><td>Input</td><td>Gold</td><td>C38-1_PCP</td><td>4077</td></tr>
<tr><td>2</td><td>GND</td><td>Silver</td><td>C38-2_PCP</td><td>6030</td></tr>
</table>
</td></tr>
</table>

© 2025 Enter your company name

Wires & Connectors:	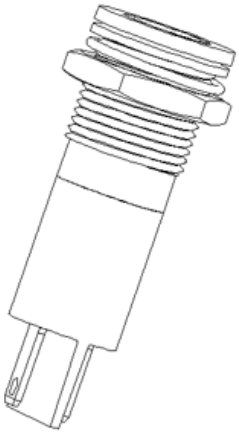 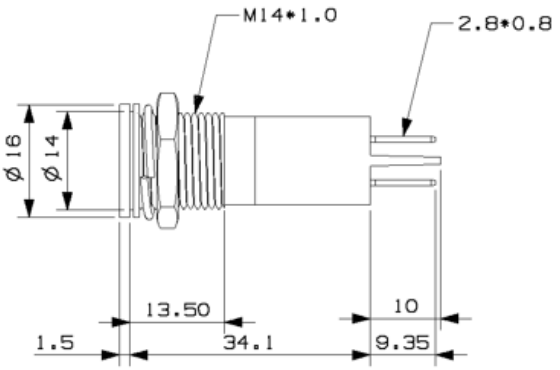 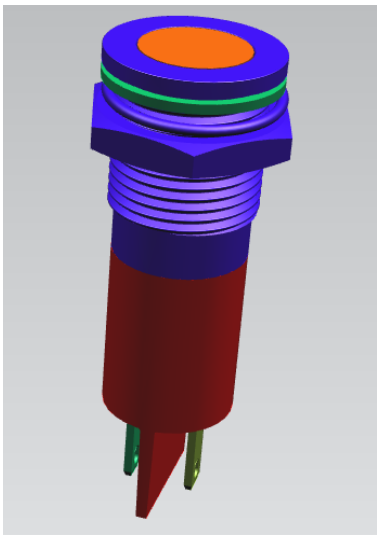
Internal Electrical Schematic:	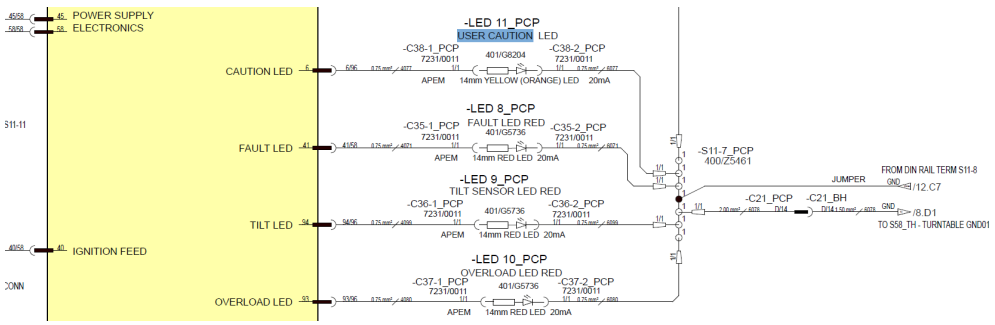
Testing:	Important: Use the multi-meter on the harness connector pins. DO NOT USE the meter on the ECU pins 1. All LED fitted on machines are 12V 2. Gold terminal is positive & silver terminal is negative 3. Check LED should not be broken

© 2025 Enter your company name

	4. IF LED light up it could be the wiring issues 5. Check the continuity on gold (positive) terminal & silver (negative) terminal of LED 6. If continuity is there on both terminal then 7. Check 12volt supply by using a multi meter 8. Connect the live terminal to the positive multi meter probe and the negative probe directly to the a main earth point on the machine or the negative terminal of the battery. 9. If this shows voltage below 12 volts then follow the schematic and investigate where the break in the wire/ circuit is. 10.If 12 volt feed is coming next check the earth by placing the positive probe of the multi meter on the live feed of the led and the negative probe onto the earth feed to the led. 11.if this again reads 12 volts this indicate LED failure , replace with new LED
Expected Values:	
Related Fault Codes:	**Fault Code** / **Description** B1188-16 / CAUTION LED SC to Low B1189-13 / CAUTION LED OC

4.39.25 Fault LED

Component:	Fault LED
Function:	• The Fault LED shall be in the platform control station and also displayed on the display. • Due to the display being at the base and not as much information being shown in the platform to the operator the fault LED shall indicate there is an issue with the machine and the operator should return to the base and take a look at the screen to understand the actual reason of the fault.
Location:	On Platform Control Box

© 2025 Enter your company name

Location Image:

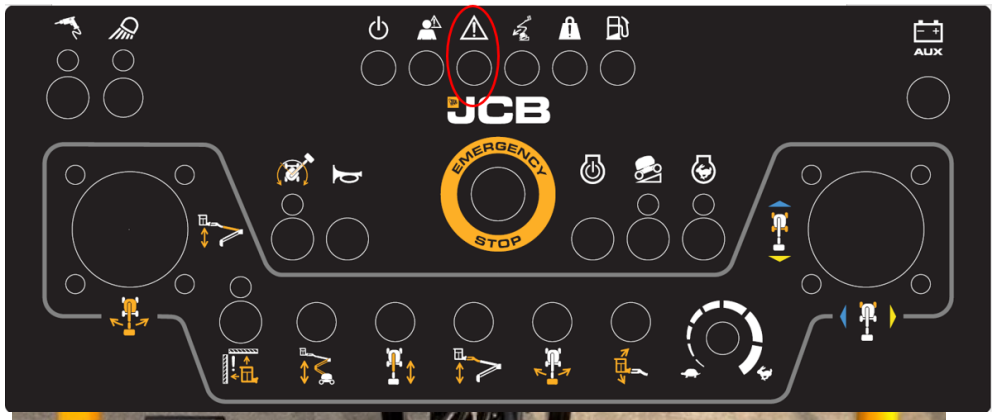



Signal:

Pin Number	Description	Colour of pin	Connector number	Wire number
1	Input	Gold	C35-1_PCP	4078
2	GND	Silver	C35-2_PCP	6031

Wires & Connectors:

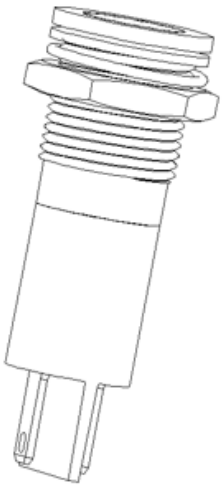

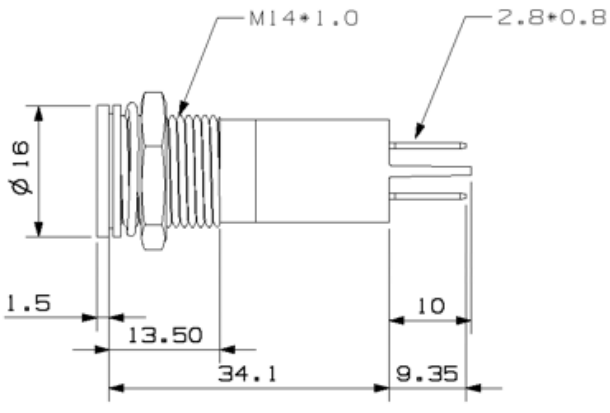

© 2025 Enter your company name

Internal Electrical Schematic:	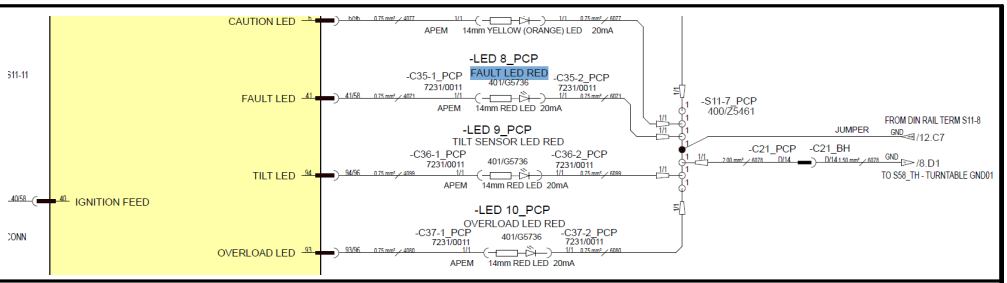
Testing:	Important: Use the multi-meter on the harness connector pins. DO NOT USE the meter on the ECU pins 1. All LED fitted on machines are 12V 2. Gold terminal is positive & silver terminal is negative 3. Check LED should not be broken 4. IF LED light up it could be the wiring issues 5. Check the continuity on gold (positive) terminal & silver (negative) terminal of LED 6. If continuity is there on both terminal then 7. Check 12volt supply by using a multi meter 8. Connect the live terminal to the positive multi meter probe and the negative probe directly to the a main earth point on the machine or the negative terminal of the battery. 9. If this shows voltage below 12 volts then follow the schematic and investigate where the break in the wire/ circuit is. 10. If 12 volt feed is coming next check the earth by placing the positive probe of the multi meter on the live feed of the led and the negative probe onto the earth feed to the led. 11. if this again reads 12 volts this indicate LED failure , replace with new LED.
Expected Values:	
Related Fault Codes:	**Fault Code** / **Description** B1190-16 / FAULT LED SC to Low B1191-13 / FAULT LED OC

4.39.26 Tilt Sensor LED

© 2025 Enter your company name

<table>
<tr><td>Component :</td><td>Tilt Sensor LED</td></tr>
<tr><td>Function:</td><td>• If the tilt sensor indicates the machine is on a slope greater than the maximum rating for the machine (5 degrees) and the machine is outside its stowed position (i.e. any of the articulated boom, main boom, or tele-boom is raised/extended, beyond their respective limit switches).
• The LED show on Platform control panel.</td></tr>
<tr><td>Location:</td><td>On Platform Control Box</td></tr>
<tr><td>Location Image:</td><td> 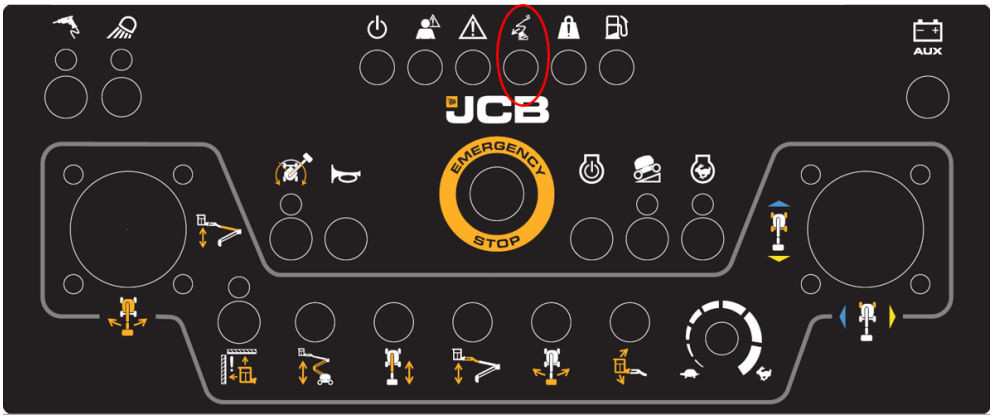


</td></tr>
<tr><td>Signal:</td><td>
<table>
<tr><th>Pin Number</th><th>Description</th><th>Colour of pin</th><th>Connector number</th><th>Wire number</th></tr>
<tr><td>1</td><td>Input</td><td>Gold</td><td>C36-1_PCP</td><td>4079</td></tr>
<tr><td>2</td><td>GND</td><td>Silver</td><td>C36-2_PCP</td><td>6032</td></tr>
</table>
</td></tr>
</table>

© 2025 Enter your company name

Wires & Connectors:	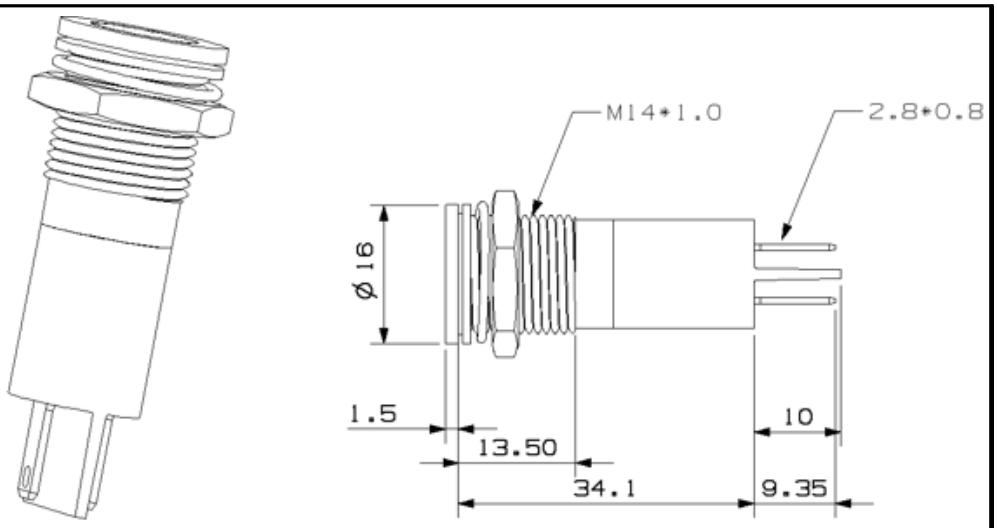
Internal Electrical Schematic:	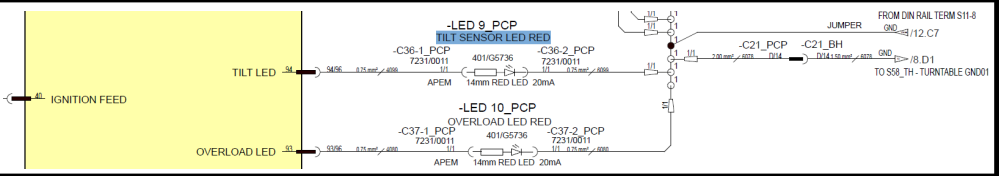
Testing:	Important: Use the multi-meter on the harness connector pins. DO NOT USE the meter on the ECU pins 1. All LED fitted on machines are 12V 2. Gold terminal is positive & silver terminal is negative 3. Check LED should not be broken 4. IF LED light up it could be the wiring issues 5. Check the continuity on gold (positive) terminal & silver (negative) terminal of LED 6. If continuity is there on both terminal then 7. Check 12volt supply by using a multi meter 8. Connect the live terminal to the positive multi meter probe and the negative probe directly to the a main earth point on the machine or the negative terminal of the battery. 9. If this shows voltage below 12 volts then follow the schematic and investigate where the break in the wire/ circuit is. 10.If 12 volt feed is coming next check the earth by placing the positive probe of the multi meter on the live feed of the led and the negative probe onto the earth feed to the led.

© 2025 Enter your company name

	11.if this again reads 12 volts this indicate LED failure , replace with new LED.
Expected Values:	
Related Fault Codes:	<table><tr><th>Fault Code</th><th>Description</th></tr><tr><td>B1192-16</td><td>TILT LED SC to Low</td></tr><tr><td>B1193-13</td><td>TILT LED OC</td></tr></table>

4.39.27 Overload LED

Component:	Overload LED
Function:	This LED to is warn the operator when the platform has to much load in the platform.
Location:	On Platform Control Box
Location Image:	

© 2025 Enter your company name

Signal:

Pin Number	Description	Colour of pin	Connector number	Wire number
1	Input	Gold	C37-1_PCP	4080
2	GND	Silver	C37-2_PCP	6033

Wires & Connectors:

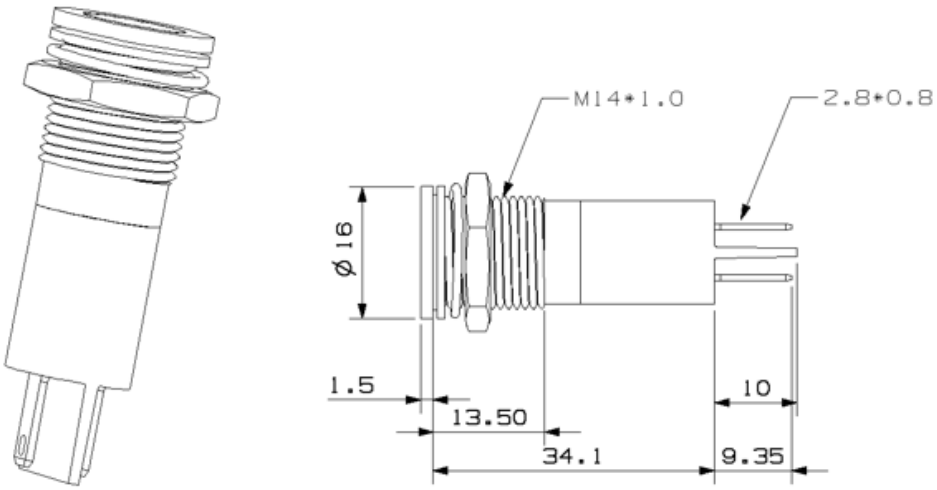

Internal Electrical Schematic:

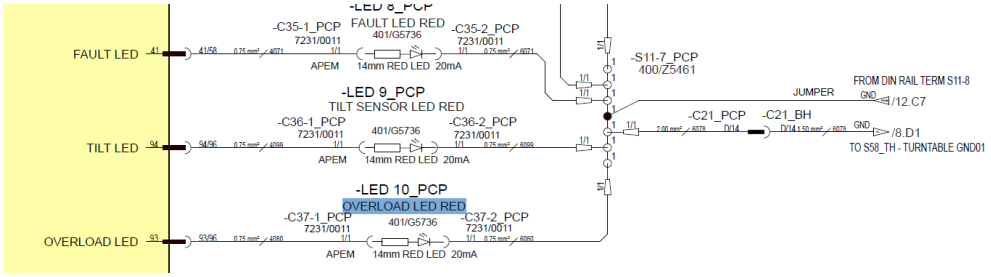

Testing:

Important: Use the multi-meter on the harness connector pins. DO NOT USE the meter on the ECU pins

1. All LED fitted on machines are 12V
2. Gold terminal is positive & silver terminal is negative
3. Check LED should not be broken
4. IF LED light up it could be the wiring issues
5. Check the continuity on gold (positive) terminal & silver (negative) terminal of LED
6. If continuity is there on both terminal then
7. Check 12volt supply by using a multi meter

© 2025 Enter your company name

	8. Connect the live terminal to the positive multi meter probe and the negative probe directly to the a main earth point on the machine or the negative terminal of the battery. 9. If this shows voltage below 12 volts then follow the schematic and investigate where the break in the wire/ circuit is. 10. If 12 volt feed is coming next check the earth by placing the positive probe of the multi meter on the live feed of the led and the negative probe onto the earth feed to the led. 11. if this again reads 12 volts this indicate LED failure , replace with new LED.
Expected Values:	
Related Fault Codes:	**Fault Code** / **Description** B1194-16 / OVERLOAD LED SC to Low B1195-13 / OVERLOAD LED OC

4.39.28 Low Fuel Level LED

Component:	Low Fuel Level LED
Function:	The low fuel LED is to warn the operator when the fuel tanks reaches to a low level to allow the operator time to go down and refill.
Location:	On Platform Control Box

© 2025 Enter your company name

Location Image:



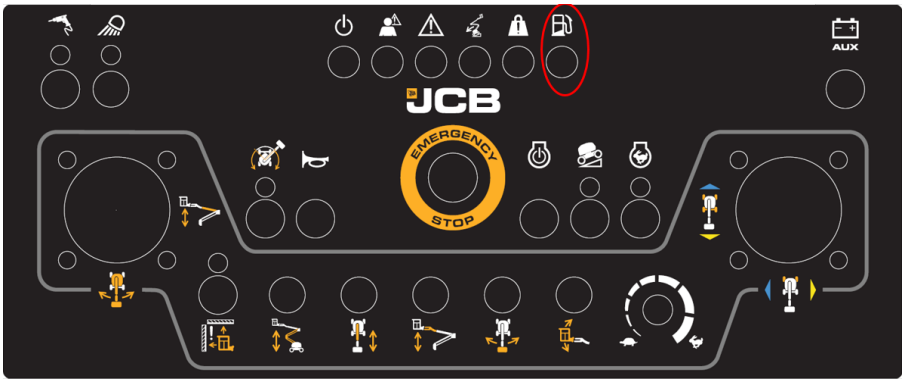



Signal:

Pin Number	Description	Colour of pin	Connector number	Wire number
1	Input	Gold	C39-1_PCP	4090
2	GND	Silver	C39-2_PCP	6056

© 2025 Enter your company name

Wires & Connectors:	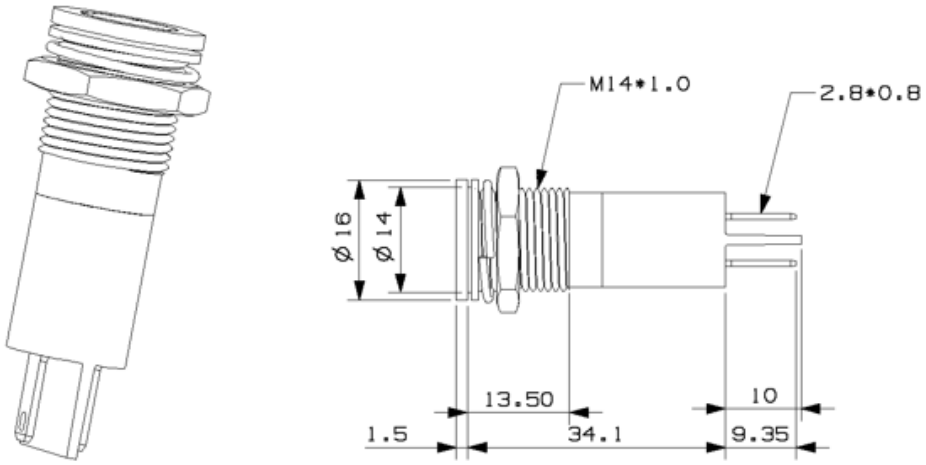
Internal Electrical Schematic:	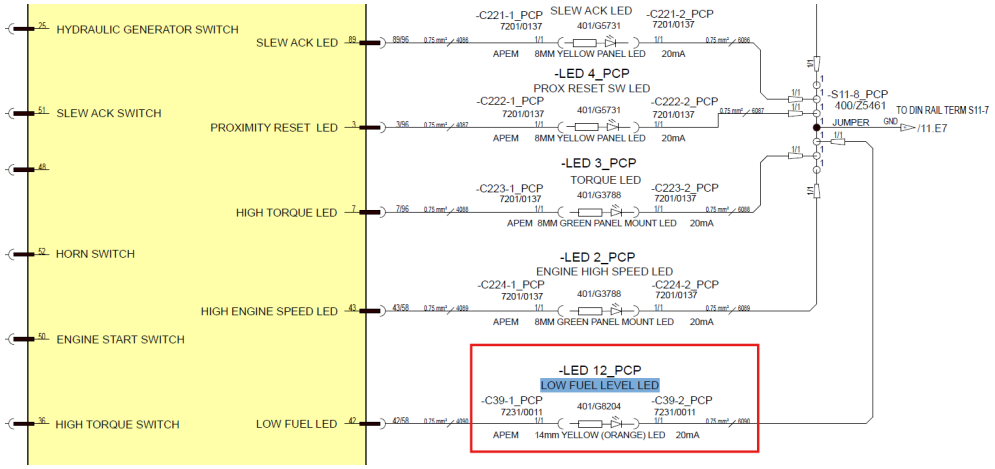
Testing:	Important: Use the multi-meter on the harness connector pins. DO NOT use the meter on the ECU pins. (SN0011) 1. All LED fitted on machines are 12V 2. Gold terminal is positive & silver terminal is negative 3. Check LED should not be broken 4. IF LED light up it could be the wiring issues 5. Check the continuity on gold (positive) terminal & silver (negative) terminal of LED 6. If continuity is there on both terminal then 7. Check 12volt supply by using a multi meter

© 2025 Enter your company name

	8. Connect the live terminal to the positive multi meter probe and the negative probe directly to the a main earth point on the machine or the negative terminal of the battery. 9. If this shows voltage below 12 volts then follow the schematic and investigate where the break in the wire/ circuit is. 10. If 12 volt feed is coming next check the earth by placing the positive probe of the multi meter on the live feed of the led and the negative probe onto the earth feed to the led. 11. if this again reads 12 volts this indicate LED failure , replace with new LED.
Expected Values:	
Related Fault Codes:	**Fault Code** / **Description** B1196-16 / LOW FUEL LED SC to Low B1197-13 / LOW FUEL LED OC

4.39.29 PCP Interface Connectors

Component:	PCP Interface Connectors
Function:	• There is 2 connectors that interface with the machine. • 1 feeds the platform harness around the platform C21_PCP • 2. feed and return to the base of the machine C22_PCP
Location:	On Platform Control Box bottom side
Location Image:	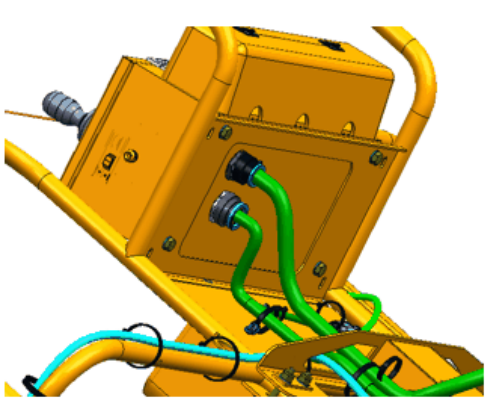 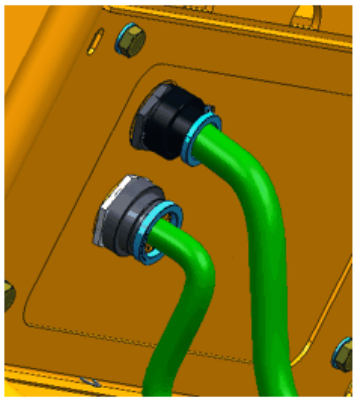

© 2025 Enter your company name

Signal:

C21_PCP_BOOM HARNESS CONN. :		
Pin Number	Description	Wire Number
A	IGN	1014
B	IGN	1015
C	-	-
D	GND	6078
E	GND	6040
F	GND	6028
G	-	-
H	-	-
J	-	-
K	-	-
L	-	-
M	CAN HIGH	CANH15
N	CAN LOW	CANL15
P	CAN SHIELD	CANS15

C22_PCP_PLATFORM INTERCONNECT:		
Pin Number	Description	Wire Number
A	IGN	4091
B	IGN	8079
C	-	4092
D	GND	1070
E	GND	6036
F	GND	4093
G	-	6079
H	-	4094
J	-	4070
K	-	4096
L	-	4097
M	CAN HIGH	4098
N	CAN LOW	4081
P	CAN SHIELD	4082
R	PLATFORM ROTATE RIGHT SOL HS	4083
S	PLATFORM ROTATE LEFT SOL HS	4084
T	IGN	1030
U	GND	6072
V	GND	6070
W	SIGNAL	4101

© 2025 Enter your company name

	X | SIGNAL | 4102
Wires & Connectors:	C21_PCP Boom harness connection C22_PCP Platform interconnect from base 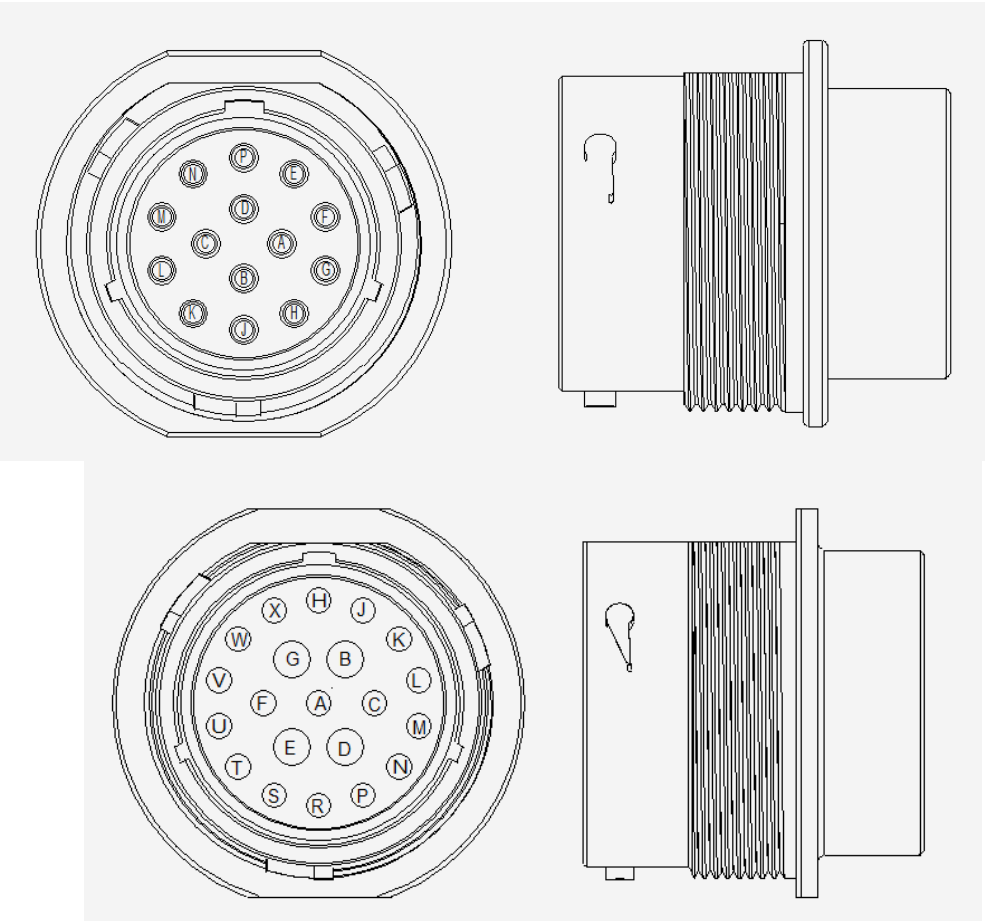
Internal Electrical Schematic:	Refer Schematic: 401/T6225
Testing:	Important: Use the multi-meter on the harness connector pins. DO NOT USE the meter on the ECU pins 1. Check all the wire and connecter are fitted correctly. No wire should be backed out 2. Check male & female connector are mating properly.
Expected Values:	

© 2025 Enter your company name

Related Fault Codes:	

4.39.30 Jumper Bars

Component:	Jumper Bars
Function:	• The jumper bars are used for connecting the din rail terminals together. This allows for the same signals to be connected together. • Always ensure they are wired to schematic wiring otherwise damage to components could be caused.
Location:	Inside the Platform Control Box

© 2025 Enter your company name

Location Image:	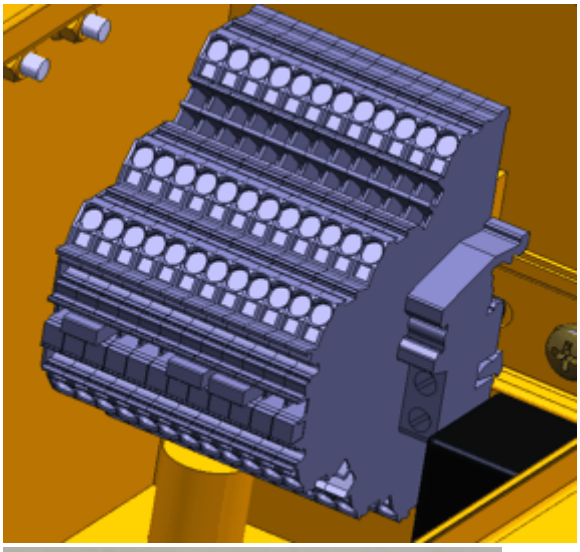 
Signal:	See din rail terminals for location of fitting
Wires & Connectors:	The jumper bars fit into the top of the din rail terminals. Ensure they are fully pushed in and flush with top of din rail terminal for a good connection. 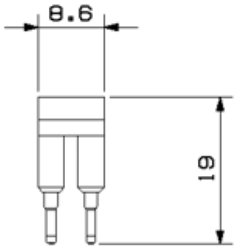 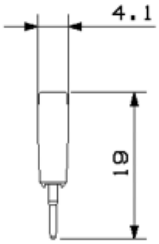 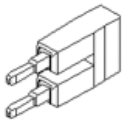

© 2025 Enter your company name

Internal Electrical Schematic:

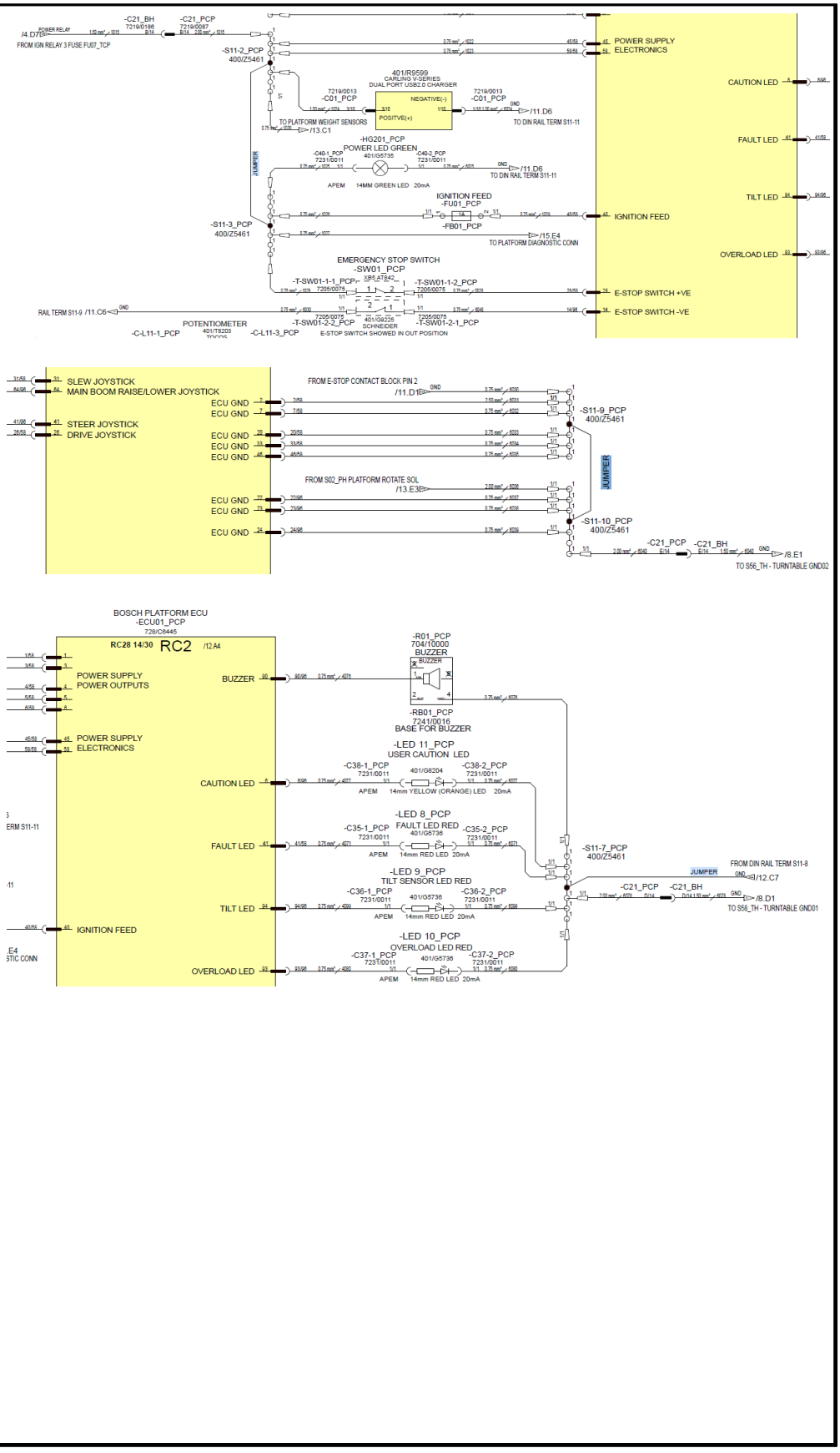

© 2025 Enter your company name

	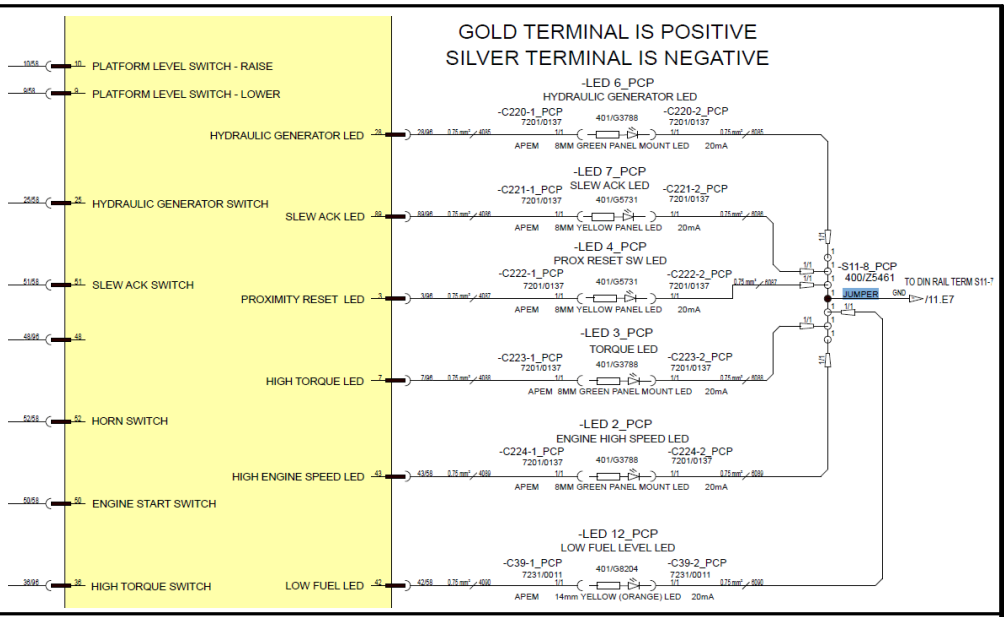
Testing:	Important: Use the multi-meter on the harness connector pins. DO NOT USE the meter on the ECU pins 1. Check jumper bar is inserted properly inside din rail terminals 2. Check continuity between din rail terminals where jumper is fitted it should buzz.
Expected Values:	
Related Fault Codes:	

4.39.31 Din Rail Terminals - Small

Component:	Din Rail Terminals - Small
Function:	• The din rail terminals work live bus bars and allow connections of wires of the same signal. • The din rail terminals can also be joined together using jumper bars. • Each din rail is capable of holding 6 individual wires. • There should always be a bootlace ferrule on the wire before inserting.

© 2025 Enter your company name

	• There should only be 1 wire per terminal. • A screw driver is required to remove terminals.
Location:	The din rail terminals are located in the platform control panel on the right hand side.

© 2025 Enter your company name

Location Image:	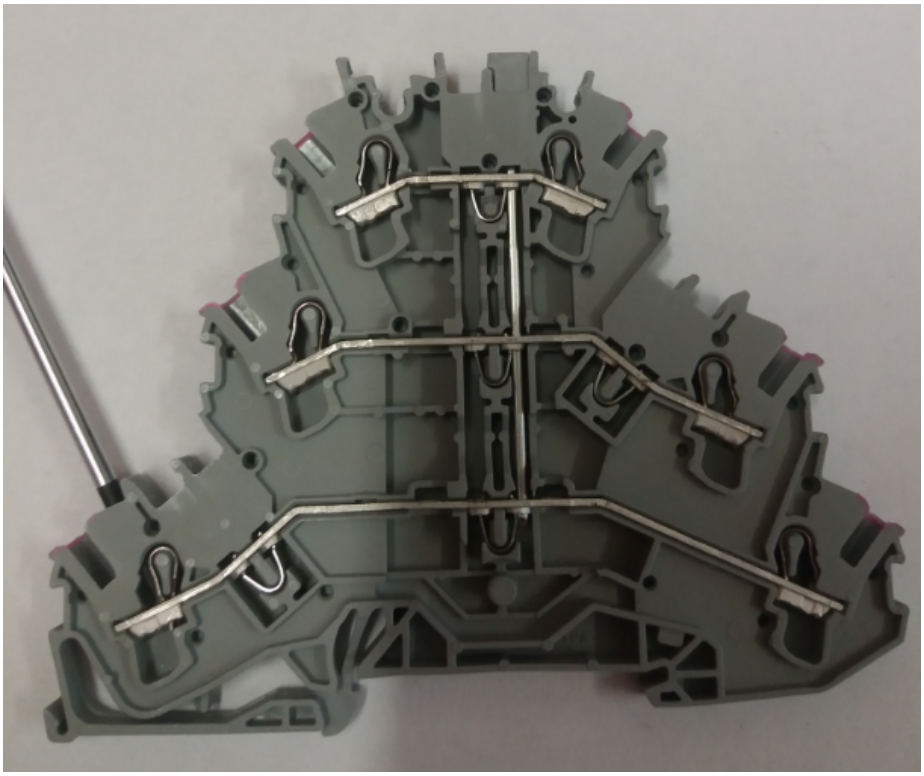 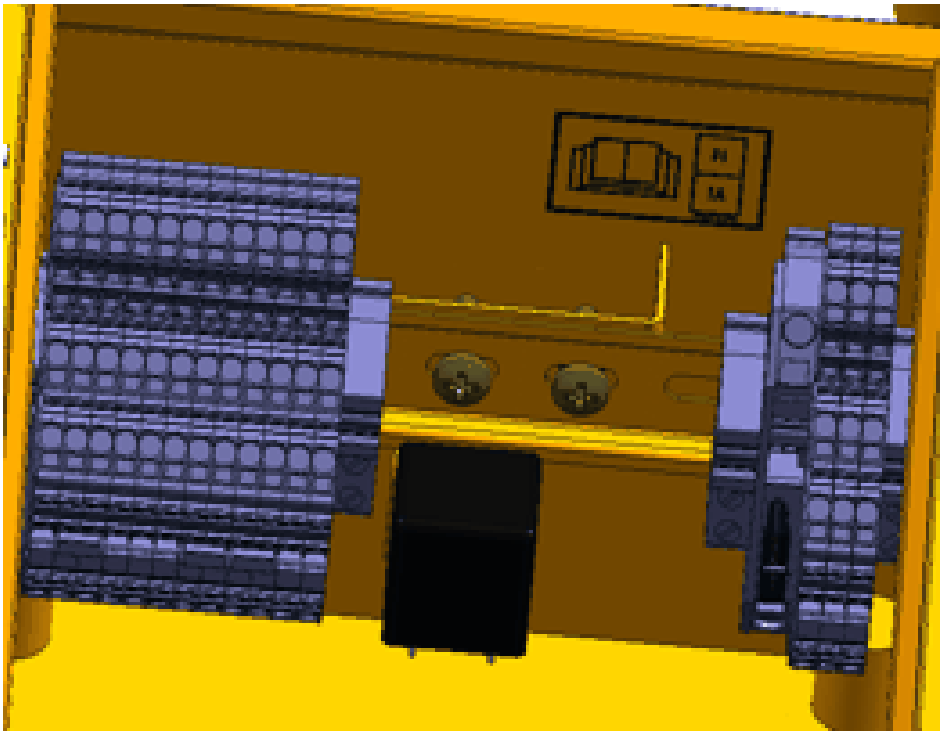 They clip onto the din rail fixed on the inside of the control box

© 2025 Enter your company name

Signal:

The din rail terminals are not marked with numbering. Because they are a bus bar the wires can be inserted into any slot in the correct din rail terminal.

They may not be in the order described below depending on assembly

S11-1_PCP - main power		
Pin Ident	**Wire number**	**Description**
1	1025	Ignition relay feed in
2	1044	Bosch power supply input
3	1045	Bosch power supply input
4	1046	Bosch power supply input
5	1047	Bosch power supply input
6	1048	Bosch power supply input

S11-2 - main power		
Pin Ident	**Wire number**	**Description**
1	1026	Ignition relay feed in
2	1049	Bosch ecu power supply
3	1050	Bosch ecu power supply
4	1020	
5		
6		
Jumper bar	Jumper to S11-3	

S11-3 - main power		
Pin Ident	**Wire number**	**Description**
1	1051	Power LED Green input
2	1052	Ignition feed to ECU
3	1053	Platform diagnostic connector
4	1054	E-Stop positive feed
5		
6		
Jumper bar	Jumper to S11-2	

S11-4 - 10V feed		
Pin Ident	**Wire number**	**Description**

© 2025 Enter your company name

1	62	10V input from ECU
2	1058	Feed to Artic boom switch, main boom telescope switch, jib switch
3	1059	Feed to platform rotate switch, platform leveling switch
4	1060	Feed to horn, proxy reset switch (optional), slew acknowledgment switch, hydraulic generator switch
5	1061	Feed to engine start switch, high torque switch, engine speed switch, electric pump switch
6	1075	Crush protection switch contact 2, foot pedal switch
S11-5 - 5V feeds		
Pin Ident	**Wire number**	**Description**
1	4069	5V feed from ECU
2	4099	feed to Crush protection Switch 1
3	1057	feed to Drive/ steer joystick
4	1056	feed to slew/ main boom joystick
5		
6		
S11-6 - 5V GND		
Pin Ident	**Wire number**	**Description**
1	6028	5V GND ECU Connection
2	6026	5V GND for Drive/Steer joystick
3	6025	5V GND for slew/ main boom joystick
4	6048	5V GND for weight sensor
5		
6		
S11-7 - GND terminal block		
Pin Ident	**Wire number**	**Description**
1	6034	GND feed to base harness
2	6029	Buzzer GND
3	6030	GND for user caution LED
4	6031	GND for fault LED
5	6032	GND for tilt sensor LED
6	6033	GND for overload LED
Jumper	Jumper to S11-8	

© 2025 Enter your company name

S11-8 GND		
Pin Ident	**Wire number**	**Description**
1	6051	GND hydraulic generator LED
2	6052	GND for Slew acknowledgment LED
3	6053	GND for prox reset LED
4	6054	GND for high torque LED
5	6055	GND for engine high speed LED
6	6066	GND for low fuel LED
Jumper	Jumper to S11-7	

S11-9 GND		
Pin Ident	**Wire number**	**Description**
1	6024	GND to Platform E-Stop
2	6039	ECU GND
3	6040	ECU GND
4	6041	ECU GND
5	6042	ECU GND
6	6043	ECU GND
Jumper	Jumper to S11-10	

S11-10 GND		
Pin Ident	**Wire number**	**Description**
1	6044	GND for platform rotate left and right solenoids, Jib up and down solenoids
2	6045	ECU GND
3	6046	ECU GND
4	6047	ECU GND
5	6049	GND feed to base harness
6		
Jumper	Jumper to S11-9	

S11-11 - GND		
Pin Ident	**Wire number**	**Description**
1	6023	GND for power LED
2	6035	GND for work light LED

© 2025 Enter your company name

3	6021	
4	6036	RC Config pin on ECU
5	6063P	GND feed to base harness
6	6037	GND to diagnostic connector
S11-12 - Worklight		
Pin Ident	**Wire number**	**Description**
1	8001	input from work light switch
2	8002	Work light LED Feed
3	8003	Work light Feed from switch
4		
5		
6		
S11-15 CAN H J1939		
Pin Ident	**Wire number**	**Description**
1		C21-PCP interconnect feed in pin M
2		diagnostic connector
3		link to S11-18
4		
5		
6		
S11-16 - CAN L J1939		
Pin Ident	**Wire number**	**Description**
1		C21-PCP interconnect feed in pin N
2		diagnostic connector
3		link to S11-19
4		
5		
6		
S11-16 - CAN S J1939		
Pin Ident	**Wire number**	**Description**
1		C21-PCP interconnect feed in pin P

© 2025 Enter your company name

2		diagnostic connector
3		link to S11-20
4		
5		
6		
S11-18 CAN H J1939		
Pin Ident	**Wire number**	**Description**
1		Bosch ECU Pin 15/58
2		terminating resistor
3		link to S11-15
4		
5		
6		
S11-19 CAN L J1939		
Pin Ident	**Wire number**	**Description**
1		Bosch ECU Pin 16/58
2		terminating resistor
3		link to S11-16
4		
5		
6		
S11-19 CAN S J1939		
Pin Ident	**Wire number**	**Description**
1		Cut end
2		terminating resistor
3		link to S11-17
4		
5		
6		

© 2025 Enter your company name

Wires & Connectors:	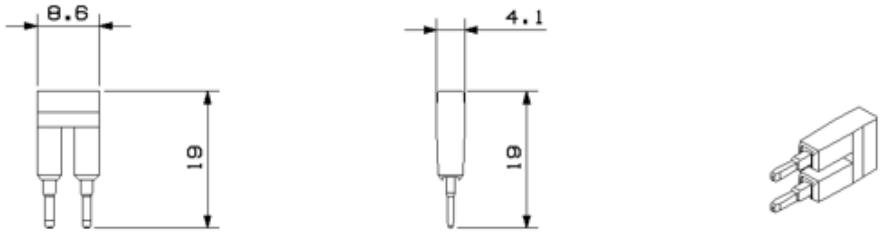
Internal Electrical Schematic:	Refer Schematic: 401/T6225
Testing:	Important: Use the multi-meter on the harness connector pins. DO NOT use the meter on the ECU pins 1. Each din rail is capable of holding 6 individual wires. 2. Ensure no water ingress inside the din rail terminals 3. Check ferrule is inserted properly inside din rail 4. Check din rail terminal are placed & locked properly over din rail 5. Check end stops are fitted correctly 6. Check all wires fitted on one din rail terminal should have continuity
Expected Values:	
Related Fault Codes:	

4.39.32 USB Connection

Component:	USB Connection
Function:	• There is a twin port USB connection at the platform for use as a charger device. • There is no data transfer in either direction and this will make no effect to the machine.
Location:	The USB connection is located on the front of the platform control box

© 2025 Enter your company name

Location Image:

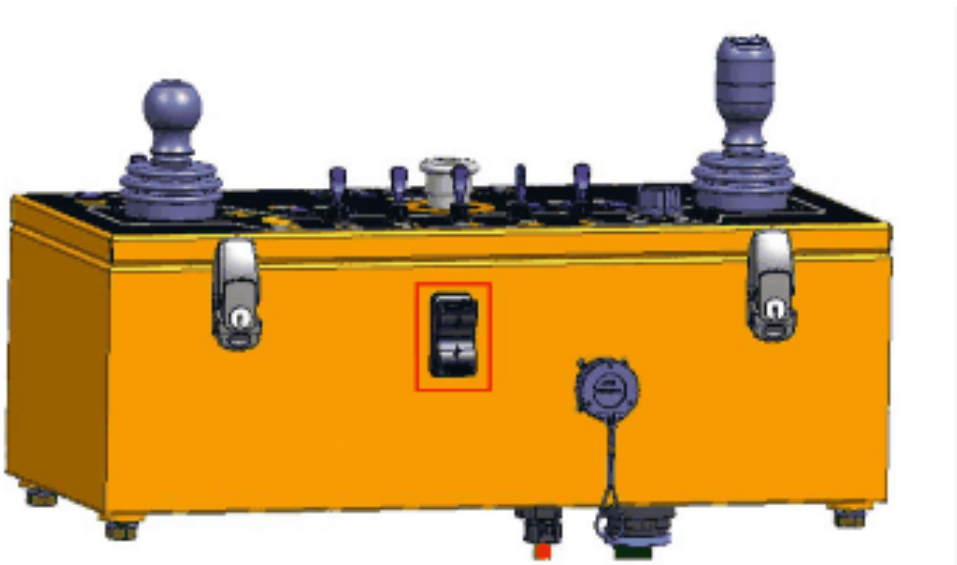

Signal:

Pin Number	Description	Wiring Number
1	Negative feed	6021
3	Positive feed	1020

Wires & Connectors:

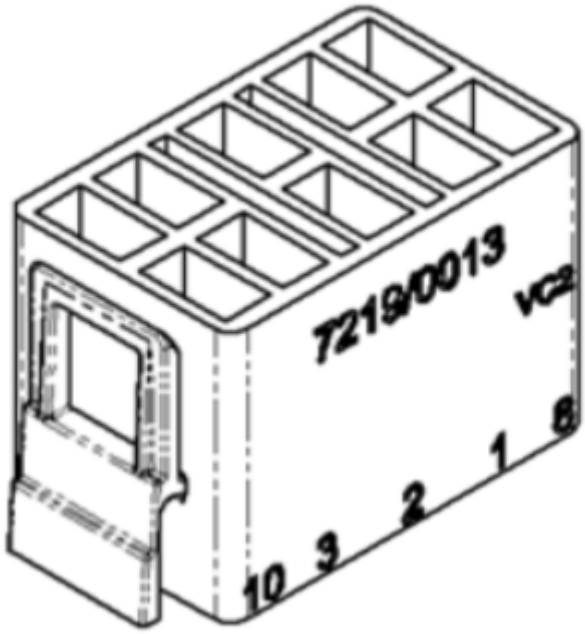

© 2025 Enter your company name

Internal Electrical Schematic:	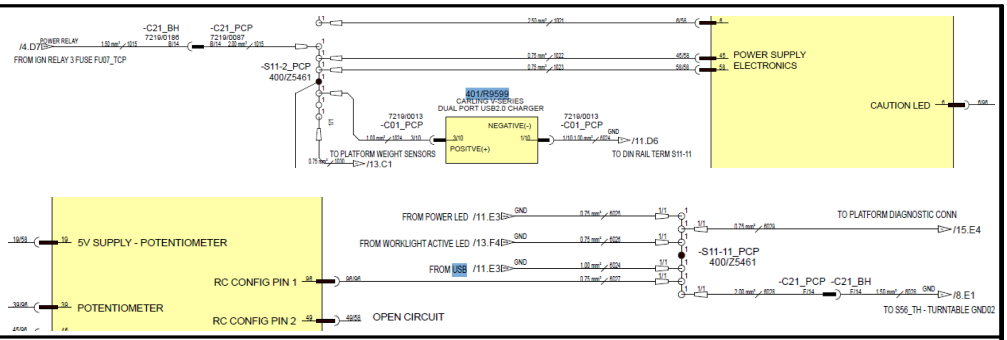
Testing:	Important: Use the multi-meter on the harness connector pins. DO NOT USE the meter on the ECU pins Note-USB connector is fitted on platform control panel to charge the mobile accessories 1. Check if there is any water ingress inside USB 2. Check the supply at connector C01 (Pin 1 and 3). It should read 12V. 3. If there is no 12V supply then need to investigate wiring as per schematic. 4. If there is 12V supply then it may be internal damage to USB. Replace it
Expected Values:	
Related Fault Codes:	

4.40 Turntable Control Panel

© 2025 Enter your company name



4.40.1 Ignition Relay

Component:	Ignition Relay
Function:	Ignition Relay is responsible for providing power to the vehicle ignition system, and some of the fuel system's components.
Location:	Ignition Relay is located in Base control panel.Relay R1 is the Ignition Relay

© 2025 Enter your company name

Location Image:

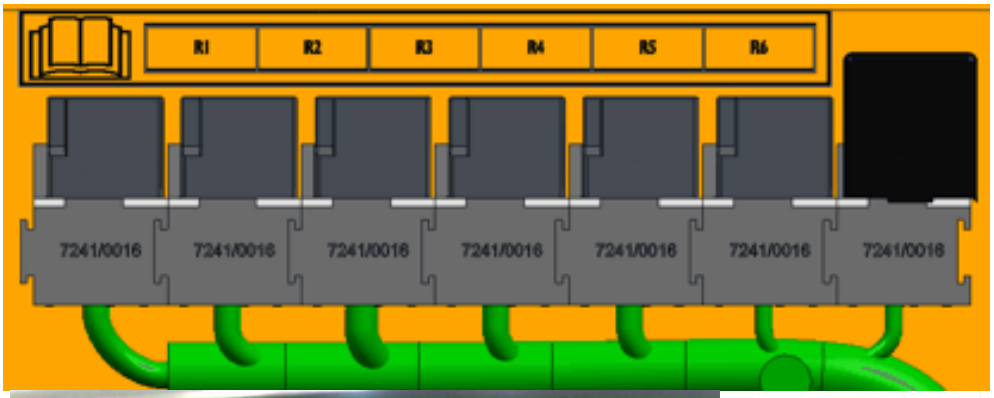

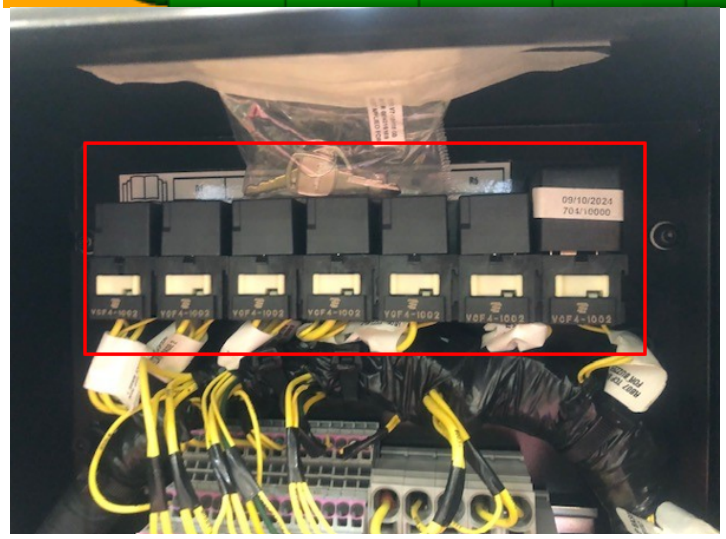

Signal:

Pin Number	Description	Wire Number
1	High Current	1
2	Ground	6001
3	High Current	-
4	12V	3001
5	12V	2001

Wires & Connectors:

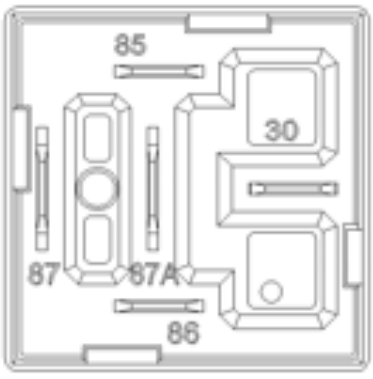



© 2025 Enter your company name

Internal Electrical Schematic:	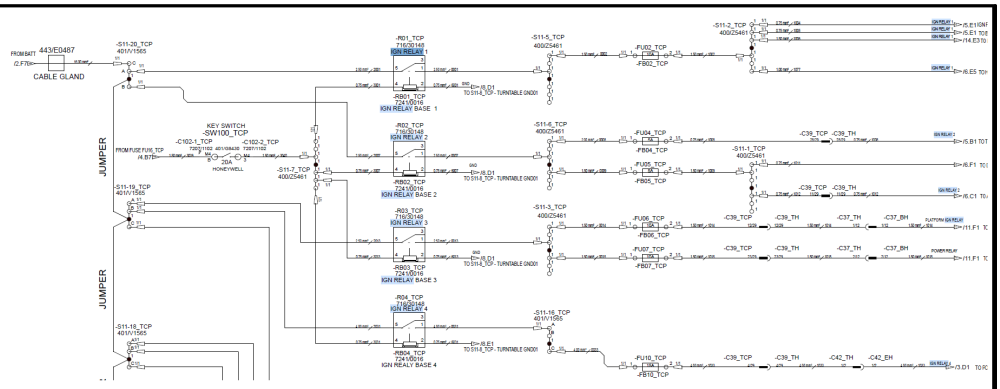
Testing:	Important: Use the multi-meter on the harness connector pins. DO NOT USE the meter on the ECU pins. 1. Remove the relay & use multi meter to measure the resistance between Pin 85 and 86 on the relay 2. Resistance should read 90+/- 10 Ω 3. If reading are incorrect replace the relay if correct check the harness as per schematic 4. If harness continuity is OK replace the relay
Expected Values:	
Related Fault Codes:	

4.40.2 Horn Relay

Component :	Horn Relay
Function:	It serves as the relay that controls power to the vehicle's horn. When current is applied to the relay, the horn's power circuit is completed, allowing the horn to function and ring.
Location:	Horn Relay is located in Base control panel.

© 2025 Enter your company name

Location Image:

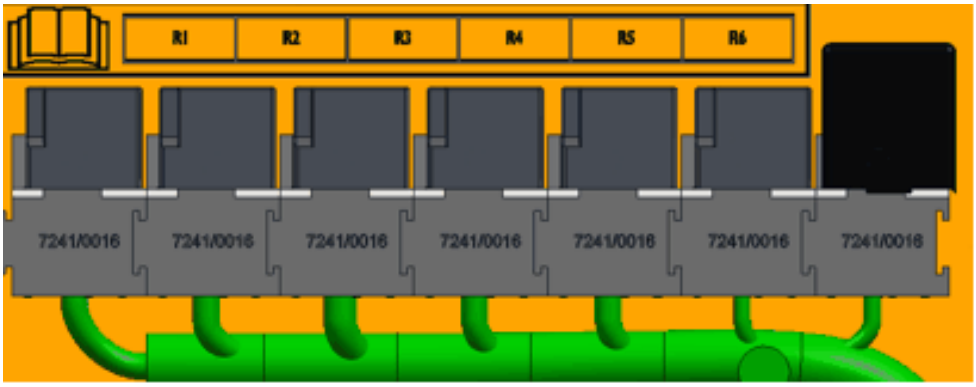



Signal:

Pin Number	Description	Wire Number
1	High Current	77
2	Ground	6035
3	High Current	-
4	12V	4035
5	12V	1077

Wires & Connectors:

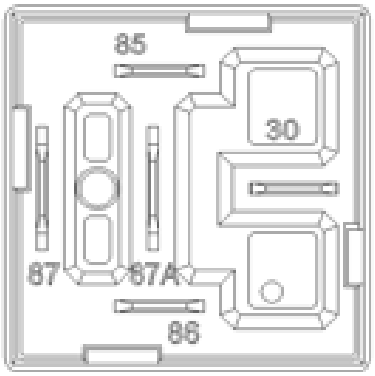

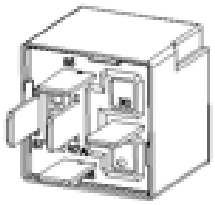

© 2025 Enter your company name

Internal Electrical Schematic:	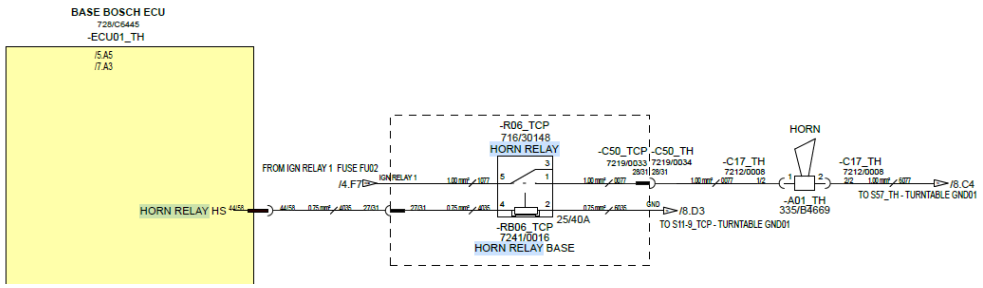
Testing:	Important: Use the multi-meter on the harness connector pins. DO NOT USE the meter on the ECU pins. 1.Remove the relay & use multi meter to measure the resistance between Pin 85 and 86 on the relay 2. Resistance should read 90+/- 10 Ω 3. If reading are incorrect replace the relay if correct check the harness as per schematic 4. If harness continuity is OK replace the relay.
Expected Values:	
Related Fault Codes:	Fault Code / Description B1181-16 – Horn Output, high side has a short to ground at the base ECU B1182-13 – Horn Output, high side has a open at the base ECU

4.40.3 D+ Relay

Component:	D+ Relay
Function:	• The base ECU shall receive a 12V alternator signal feed when the alternator is working from D+ relay. • If there is a 12V input from D+ relay and the engine is off – the alternator icon should be lit. • If there is no 12V feed from D+ relay but engine is running then identify as fault and turn icon on display, fault led at platform and buzzer in both locations.
Location:	D+ Relay is located in Base control panel. Relay R5 is the D+ Relay

© 2025 Enter your company name

Location Image:

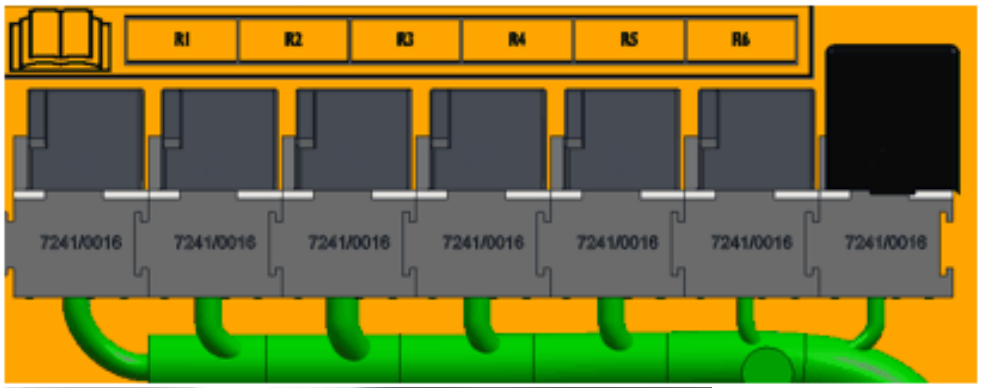

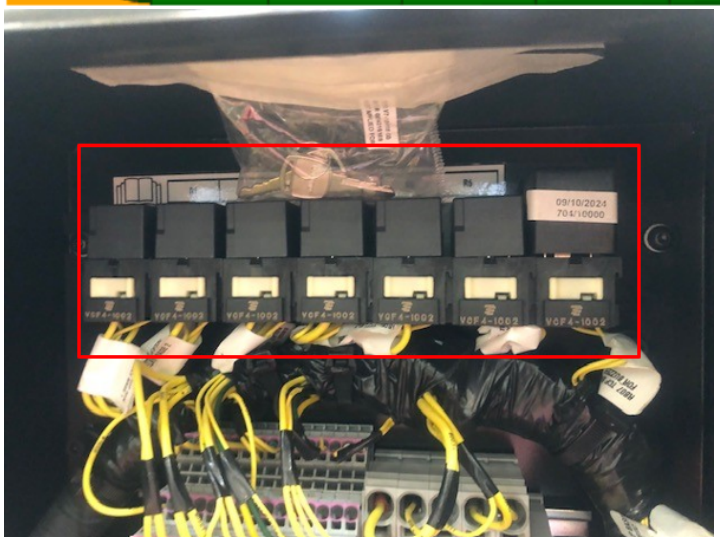

Signal:

Pin Number	Description	Wire Number
1	High Current	34
2	Ground	6034
3	High Current	-
4	12 V	4034
5	12 V	2034

© 2025 Enter your company name

Wires & Connectors:	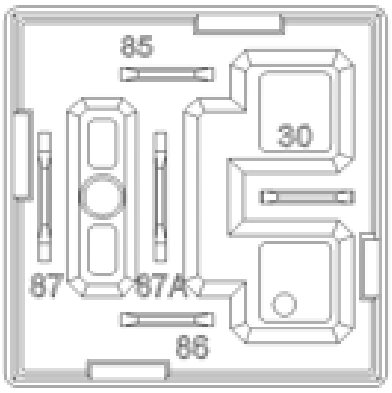 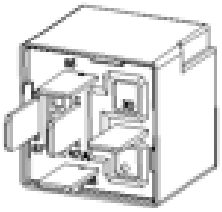
Internal Electrical Schematic:	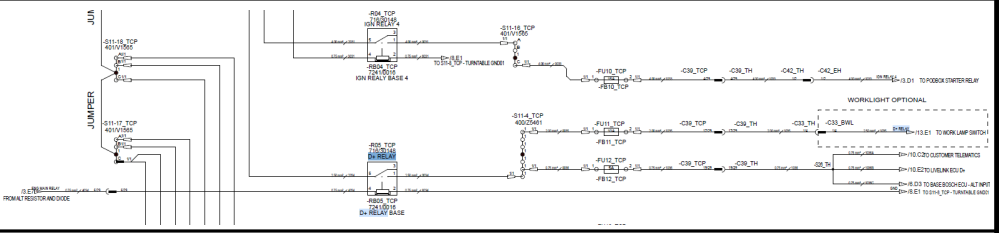
Testing:	Important: Use the multi-meter on the harness connector pins. DO NOT USE the meter on the ECU pins. 1. Remove the relay & use multi meter to measure the resistance between Pin 85 and 86 on the relay 2. Resistance should read 90+/- 10 Ω 3. If reading are incorrect replace the relay if correct check the harness as per schematic 4. If harness continuity is OK replace the relay.
Expected Values:	
Related Fault Codes:	

4.40.4 Fusing Turntable Control Panel

Component:	Fusing Turntable Control Panel

© 2025 Enter your company name

Function:	The Fuses are to provide power to the controllers and devices of the machine.
Location:	The Fuses are fitted into Din Rail Fuse Holder

© 2025 Enter your company name

Location Image:	 

© 2025 Enter your company name

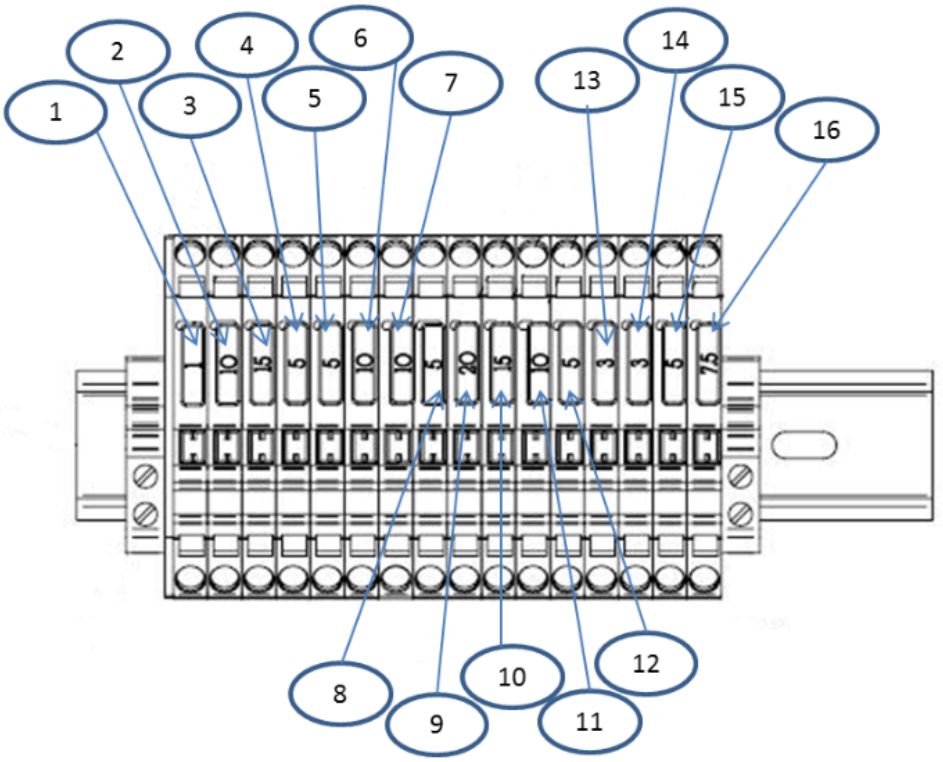

Shows the Fuse Ratings for Turntable control panel

Number	Fuse Rating	Description	Sc
1	1A	Ignition Fuse	F
2	10A	Base E-Stop, Horn Relay, Diagnostic connector	F
3	15A	Bosch ECU Base	F
4	5A	Platform weight sensor, Tilt Sensor	F
5	5A	Display, Axle Lock pressure Sensor	F
6	10A	Bosch ECU Platform supply	F
7	10A	Bosch ECU Platform supply	F
8	5A	Bosch ECU Base supply	F
9	20A	Engine Pod box Power hold relay	F
10	15A	Engine Pod box Starter Relay	FU
11	10A	Work light (Optional)	FU
12	5A	Engine run signal for Telematics and Bosch ECU base	FU
13	3A	Livelink	FU
14	3A	Display	FU
15	5A	Engine Pod box power hold coil	FU

© 2025 Enter your company name

	16	7.5A	Key Switch	FU

Signal:

Fuse	Wire in	Wire out
FU01_TCP Ignition Fuse	1013 from ignition relay 1	0040 to Bosch ecu, Livelink, customer Telematics
FU02_TCP Ignition Fuse	0024 from S11-7_TCP	1012 to S11-4_TCP
FU03_TCP Ignition Fuse	0025 from S11-7_TCP	1018 to Bosch ECU
FU04_TCP Ignition Fuse	0028 from S11-8_TCP	1083 to S11-1_TCP
FU05_TCP Ignition Fuse	0029 from S11-8_TCP	1084 to S11-3_TCP
FU06_TCP Ignition Fuse	0032 from S11-5_TCP	1025 to platform ecu supply
FU07_TCP Ignition Fuse	0033 from S11-5_TCP	1026 to platform ecu supply
FU08_TCP Ignition Fuse	0036 from S11-5_TCP	1029 to Bosch base ecu
FU09_TCP Ignition Fuse	0034 from S11-2_TCP	0034 to pod box power hold relay
FU10_TCP Ignition Fuse	0035 from S11-2_TCP	0035 to pod box starter relay
FU11_TCP Ignition Fuse	0039 from S11-6_TCP	1031 Work light (optional fit)
FU12_TCP Ignition Fuse	0038 from S11-6_TCP	1032 customer Telematics, Livelink D+ and Bosch ecu D+ input
FU13_TCP Permanent Fuse	2005 from S11-23_TCP	3004 Livelink
FU14_TCP Permanent Fuse	2006 from S11-23_TCP	3003 to Display
FU15_TCP Permanent Fuse	2007 from S11-23_TCP	3002 to pod box power hold coil
FU16_TCP Permanent Fuse	2008 from S11-23_TCP	3001 to key switch

© 2025 Enter your company name

Wires & Connectors:	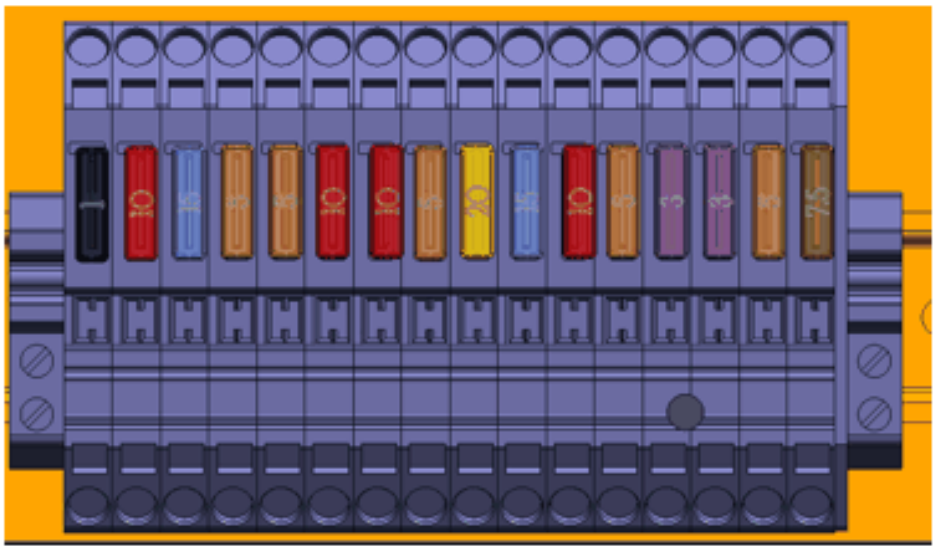 
Internal Electrical Schematic:	
Testing:	Important: Use the multi-meter on the harness connector pins. DO NOT USE the meter on the ECU pins 1. To test the fuse terminal block set a multiple to continuity 2. remove fuse and check one side of block to the other there should be no connection 3. insert a fuse and then test one end of terminal block to the other side and now there should be continuity.
Expected Values:	

© 2025 Enter your company name

Related Fault Codes:	

4.40.5 Large Jumper Bar

Component:	Large Jumper Bar
Function:	• The jumper bars are to make electrical connection between the din rail terminals. • This allows for connections to be made from one din rail terminal to another. • There is 2 different sizes of Jumper bar dependent on the terminal block size they fit into and multiple configurations dependent on number of ways are available.
Location:	Below shows an image of a 5 Way Large Jumper Bar. This is for example only.

© 2025 Enter your company name

Location Image:	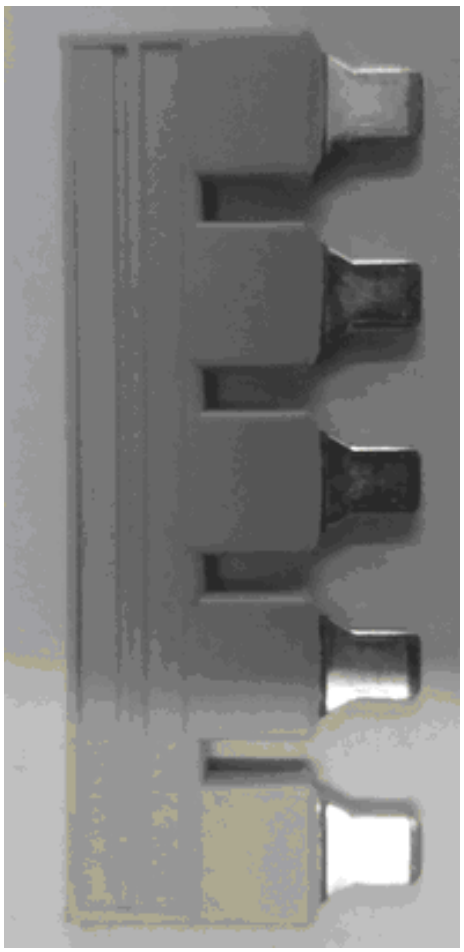 The large jumper bars are connecting the main power in on the large terminal blocks in the turntable control panel.
Signal:	The Large jumper bars in the turntable control panel will connect up the 12V Permanent power. Always take care when working with permanent feed.
Wires & Connectors:	The Jumper bar connects S11-21_TCP, S11-22_TCP, S11-23_TCP, S11-24_TCP
Internal Electrical Schematic:	A 3 way version of the large jumper bar is used in the turntable control panel

© 2025 Enter your company name

	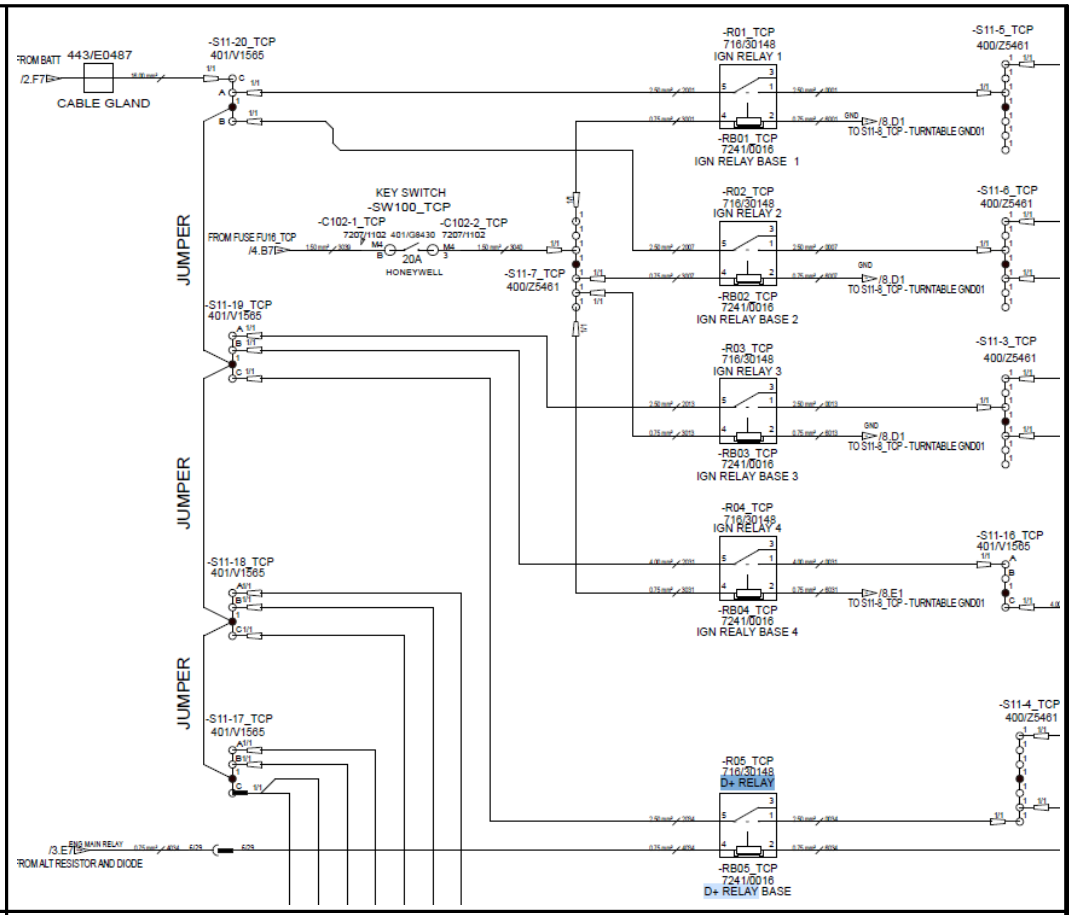
Testing:	Important: Use the multi-meter on the harness connector pins. DO NOT USE the meter on the ECU pins. 1.Ensure power of the machine is turned off. Do not work live. 2.Test continuity from one terminal block to another, If no continuity remove jumper bar and test in isolation. 3.Failure of continuity will need the jumper bar replacing.
Expected Values:	
Related Fault Codes:	

© 2025 Enter your company name

4.40.6 Ignition Switch

Component :	Ignition Switch
Function:	• Ignition switch is used for Turn ON / OFF the machine power (Ignition signal).The key is not removable in the ON position. Base Bosch ECU controls the Engine ignition feed. • The Key is a 455 industry standard Key and not a JCB machine key.
Location:	Key switch located at base, on the Turntable control panel.
Location Image:	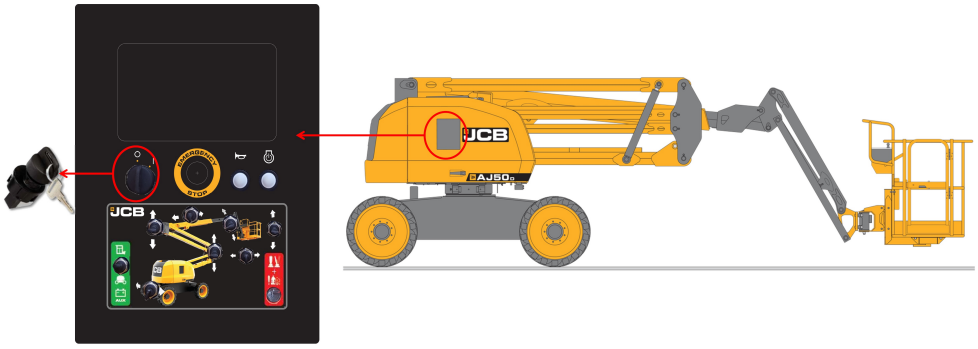
Signal:	
Wires & Connectors:	The connections are ring terminal on the harness and screw terminals into the ignition switch. The ignition has numbers impressed into the molding at the bottom, they are small and some are on the outer ring.

Pin Number	Description	Wire Number
B	Feed	3001
3	Switched Output	18

© 2025 Enter your company name

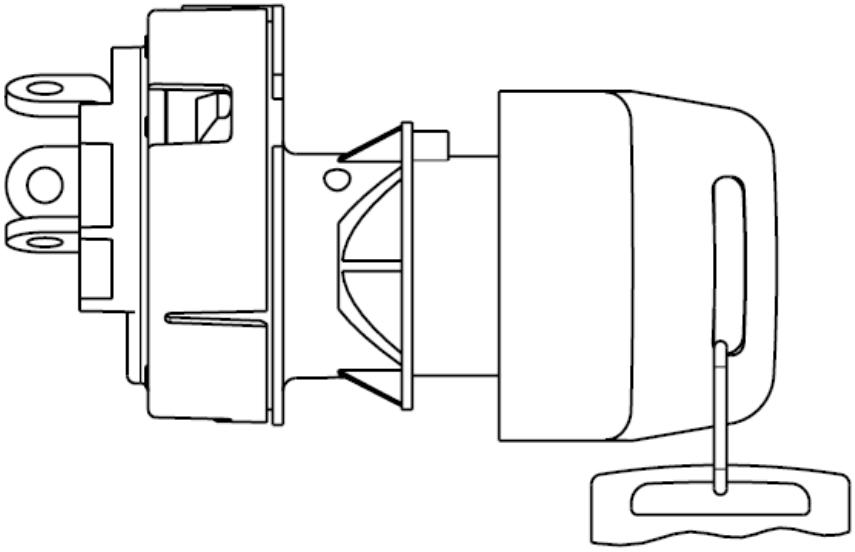

The screws are provided with the ignition key barrel. Be careful they do not get lost.

Internal Electrical Schematic:

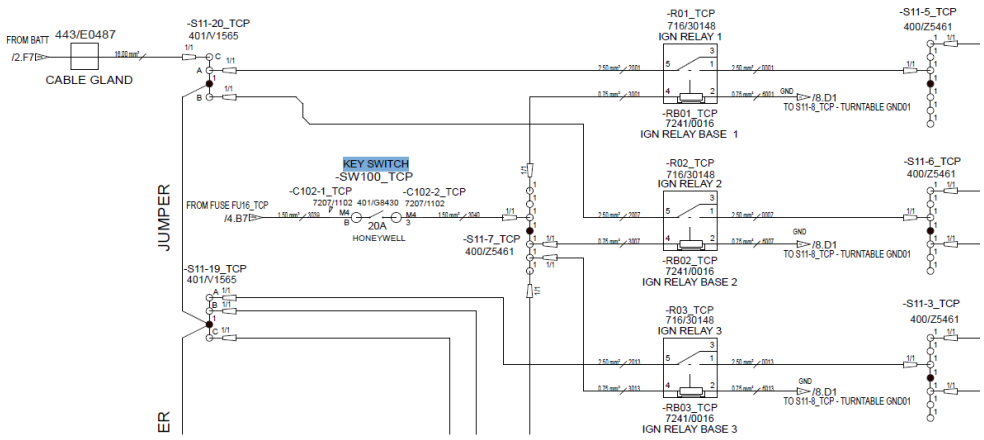

Testing:

Important: Use the multi-meter on the harness connector pins. DO NOT USE the meter on the ECU pins.

1.Take multimeter and Check the multimeter is working

2.Set the multimeter in continuity mode (Sound wave or Diode or both)

3.Place the red probe on one of the terminals on the switch and black probe on other terminal on the switch.

© 2025 Enter your company name



4.In Key switch in OFF position, Multimeter should read as 'OL' (open circuit)

5.In Key switch in ON position, Multimeter should read as '1' or less.

6.Operate the switch in ON and OFF in few more times. Multimeter reading should change while operating from ON to OFF. If the reading doesn't change means key switch is defective

7.Replace the defective key switch with part number.

Expected Values:

Related Fault Codes:

Fault Code	Description
B1357-16	ENGINE CRANK SC to Low
B1358-13	ENGINE CRANK SC to High or OC

4.40.7 Emergency STOP Switch(TCP)

Component:	Emergency STOP Switch(TCP)
Function:	Emergency stop switch will cut off the Engine and all ECU outputs except CAN. Display and Bosch ECU are remain in the ON. It is equipped with 2 normally closed contacts, one has +12V and other one has GND signals.
Location:	E-STOP switch located in Base, on the Turntable control panel.

© 2025 Enter your company name

Location Image:

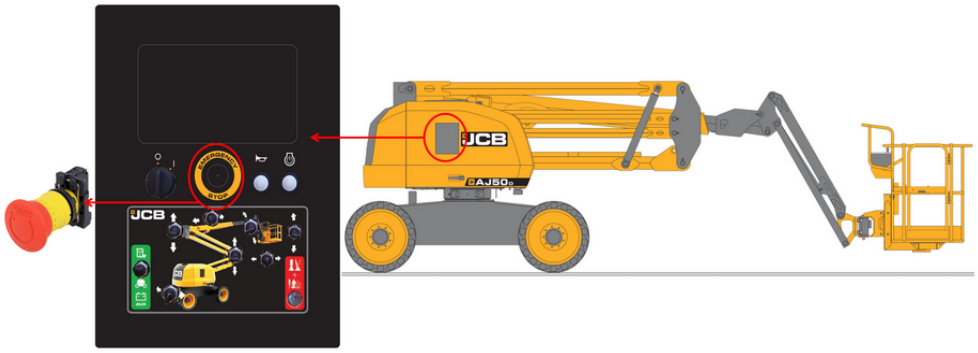

Signal:

Pin Number and contactor block	Description	Connector number	Wire number
contact 1 NC pin 1	12V feed	T-SW-01-1-1 TCP	1014
contact 1 NC pin 2	Output to platform ECU	T-SW-01-1-2 TCP	41
contact 2 NC pin 2	GND feed	T-SW-01-2-2 TCP	6005
contact 2 NC pin 1	Output to ECU	T-SW-01-2-1 TCP	42

Wires & Connectors:

Wires and Connectors:

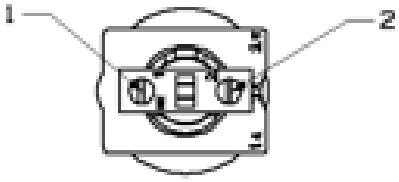

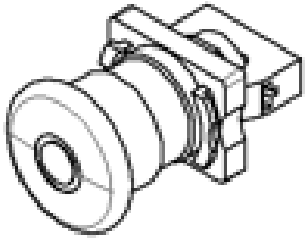

PIN OUT: PIN 1 - INPUT
PIN 2 - OUTPUT

Internal Electrical Schematic:

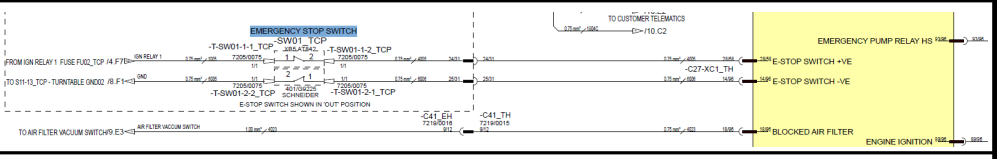

Testing:

Important: Use the multi-meter on the harness connector pins. DO NOT USE the meter on the ECU pins.

1. Do the below steps for both contacts separately.

2. Take multimeter and check the multi meter is working

© 2025 Enter your company name

	3. Set the multimeter in continuity mode (Sound wave or Diode or both) 4. Place the red probe on one of the terminal on the switch and black probe on other terminal on the switch.  5. In E-Stop switch in PUSHED IN state, Multimeter should read as 'OL' (open circuit) 6. In E-Stop switch in OUT state, Multimeter should read as '1' or less. 7. Operate the switch in PUSHED IN and OUT state in few more times. Multimeter reading should change while operating from PUSHED IN to OUT. If the reading doesn't change means E-Stop switch is defective 8. Replace the defective E-Stop switch with same type and size, please contact JCB Service department.
Expected Values:	
Related Fault Codes:	<table><tr><th>Fault Code</th><th>Description</th></tr><tr><td>B1235-17</td><td>E-Stop Plausibility Check</td></tr></table>

4.40.8 Slew Switch(TCP)

© 2025 Enter your company name

Component :	Slew Switch(TCP)
Function:	Slew switch is for slew the Machine i.e. Chassis part stays standstill and the upper portion of the machine slew either right or left.
Location:	Slew switch located at base, on the Turntable control panel.
Location Image:	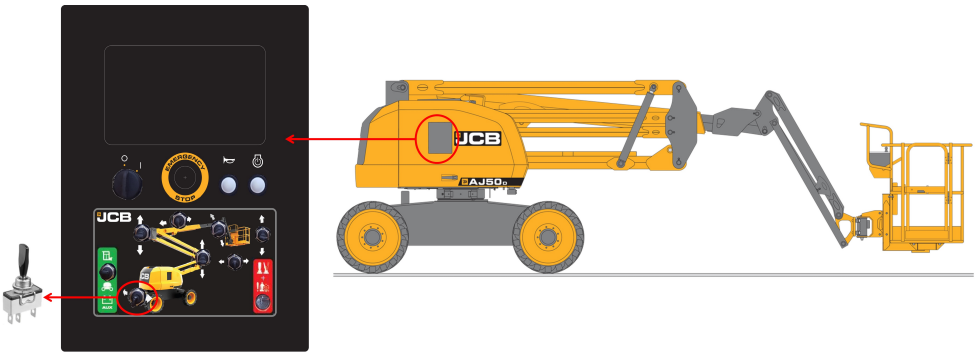

Signal:

Pin Number	Description/ Signal	Connector number	Wire number(s)	Voltage with switch unpressed	Voltage with switch pressed
1	Slew Right	C110-1_TCP	48	2.7 V	10V
2	Power in (10V)	C110-2_TCP	1034, 1035	10V	NA
3	Slew Left	C110-3_TCP	49	3.4 V	10V

© 2025 Enter your company name

Wires & Connectors:	 
Internal Electrical Schematic:	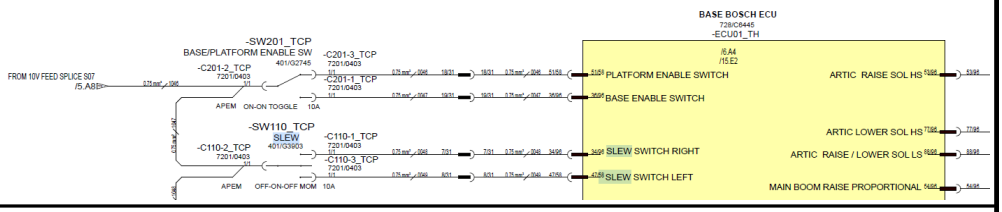
Testing:	Important: Use the multi-meter on the harness connector pins. DO NOT USE the meter on the ECU pins 1. There are3 contact on the back of switch. 2. Check terminal 1,2 & 3 connected correctly with wiring harness terminal 1,2 & 3 respectively. 3. Terminal 2 is for incoming supply 4. Check continuity between ‘terminal 2 & terminal 3’ and ‘terminal 2 & terminal 1’. It should buzz for one combination and should not buzz for other. When switch is pressed, it should buzz vice verse. 5. Check supply at terminal 2. It should read 10V. 6. If there is no 10V then investigate wiring as per schematic. 7. If there is 10V available and continuity is OK then it should be internal damage to switch. Replace it.

© 2025 Enter your company name

Expected Values:	
Related Fault Codes:	

Fault Code	Description
B1338-17	SLEW RIGHT OR LEFT PROPORTIONAL Solenoid Valve LS SC to High
B1339-16	SLEW RIGHT OR LEFT PROPORTIONAL Solenoid Valve LS SC to Low
B1340-13	SLEW RIGHT OR LEFT PROPORTIONAL Solenoid Valve LS OC

4.40.9 Horn Switch(TCP)

Component:	Horn Switch(TCP)
Function:	Horn switch is for audible warning that the operator can use.
Location:	Horn switch located at base, on the Turntable control panel.
Location Image:	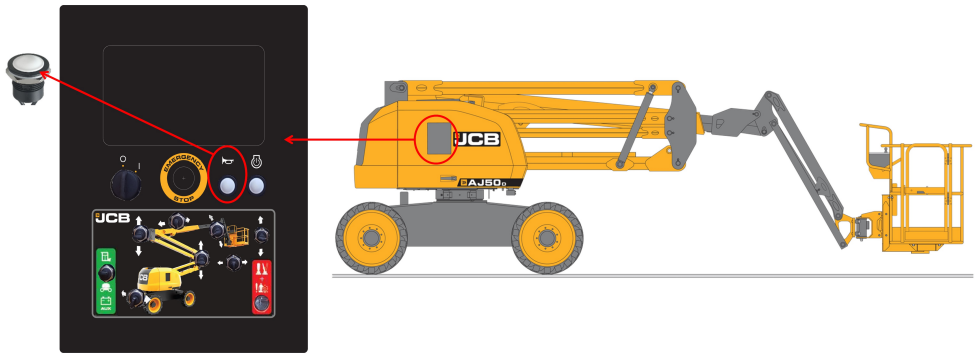

Signal:

Pin Number	Description	Connector number	Wire number(s)	Voltage unpressed	Voltage pressed
1	10V input	C101-2_TCP	1030B, 1043		
2	Signal output to ECU (10V when pressed)	C101-1_TCP	65		10V

© 2025 Enter your company name

Wires & Connectors:	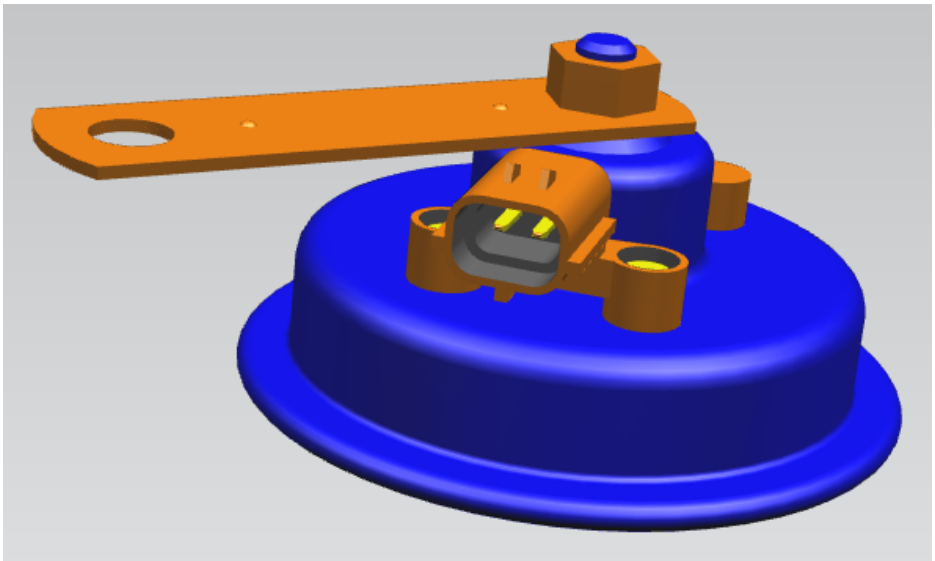 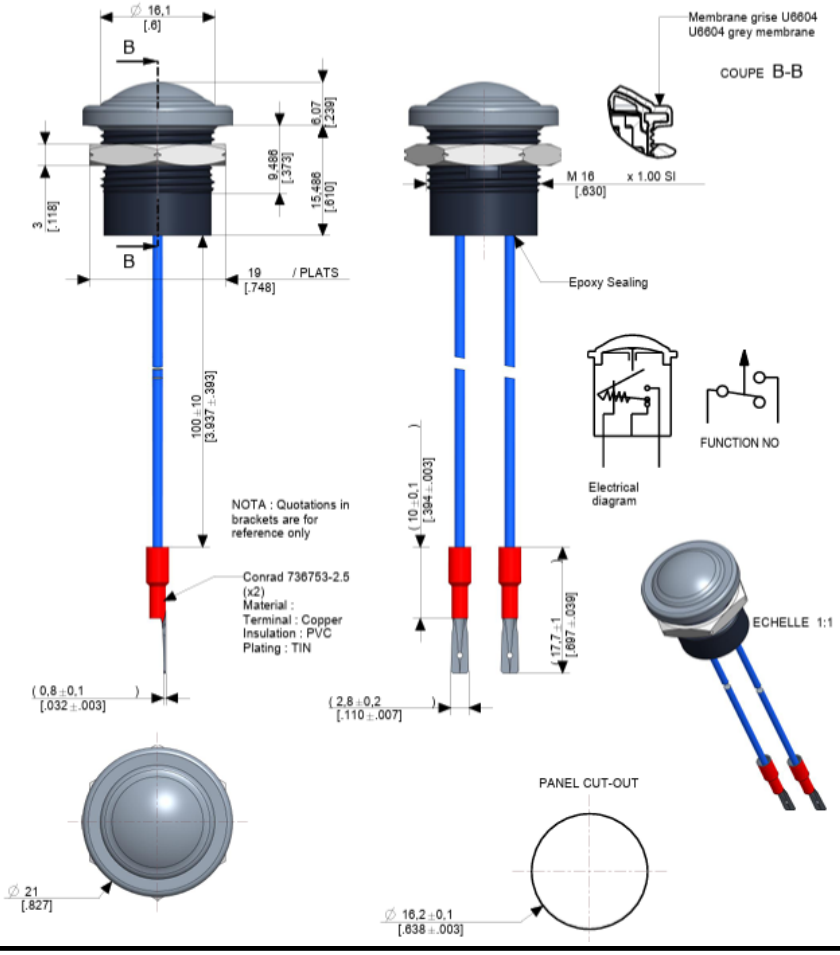

© 2025 Enter your company name

Internal Electrical Schematic:	
Testing:	Important: Use the multi-meter on the harness connector pins. DO NOT USE the meter on the ECU pins Refer Test the Push Button Note-All the bush button fitted on machine are 10V ,normally open and closed when pressed Diagnostic feedback on push button are coming from ECU 1. Check supply at wiring harness terminal-1 with (respect to ground) on push button (when not pressed). It should read 10V. 2. Check the voltage at wiring harness terminal-2 on push button (When not pressed). It should read 2-3V 3. Check the continuity between terminal 1 & 2 after pressing the push button. It should buzz. 4. If there is continuity and we are getting 10V supply then it may be internal damage to push button. 5. If issue still there replace the push button.
Expected Values:	
Related Fault Codes:	**Fault Code** / **Description** B1181-16 / HORN HS SC to Low B1182-13 / HORN HS OC B1206-17 / HORN BUTTON SC to High B1207-16 / HORN BUTTON SC to Low B1208-24 / HORN BUTTON Stuck for >= 10 seconds

4.40.10 Large Din Rail Terminal

Component:	Large Din Rail Terminal
Function:	• The Terminal blocks are to allow for connections of signal to a common feed.

© 2025 Enter your company name

	• In the turntable control panel these are used to distribute the main 12V permanent feed in. • Always ensure bootlace ferrules are fitted to wire ends before inserting into a terminal block
Location:	Inside the Base Control Box
Location Image:	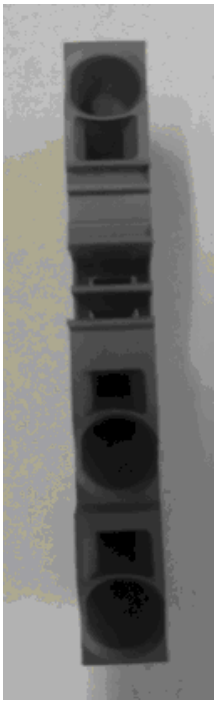  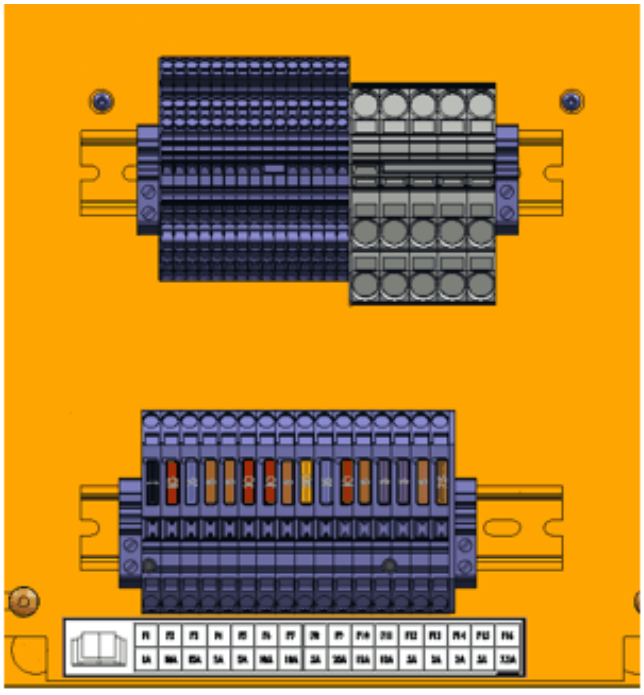

© 2025 Enter your company name

Signal:

The signal from all of the above terminal blocks is 12V permanent feed to provide power to the ignition relays.

Wires & Connectors:

S11-21_TCP

Signal	Wire Number	Wire Size
Main Feed in	Battery lead feed in	16mm
12V to Ign Relay 1 Contacts	2000	2.5mm2
12V to Ign Relay 2 Contacts	2001	2.5mm2

S11-22_TCP

Signal	Wire Number	Wire Size
12V to Ign Relay 3 Contacts	2002	2.5mm2
12V to Ign Relay 4 Contacts	2003	2.5mm2
12V to Ign D+ Relay Contacts	2004	2.5mm2

S11-23_TCP

Signal	Wire Number	Wire Size
12V to FU13_TCP Fuse	2005	0.75mm2
12V to FU14_TCP Fuse	2006	0.75mm2
12V to FU15_TCP Fuse	2007	1.00mm2

S11-24_TCP

Signal	Wire Number	Wire Size
12V to FU16_TCP Fuse	2008	1.5mm2
Spare		
Spare		

Internal Electrical Schematic:

Testing:

Important: Use the multi-meter on the harness connector pins. DO NOT USE the meter on the ECU pins.

1. Each din rail is capable of holding 3 individual wires.

© 2025 Enter your company name

	2. Ensure no water ingress inside the din rail terminals. 3. Check ferrule is inserted properly inside din rail. 4. Check din rail terminal are placed & locked properly over din rail. 5. Check end stops are fitted correctly. 6. Check all wires fitted on one din rail terminal should have continuity.
Expected Values:	
Related Fault Codes:	

4.40.11 Engine Start Switch(TCP)

Component :	Engine Start Switch(TCP)
Function:	Engine start switch is to start / Crank the engine. Engine crank only possible if Ignition signal available at Engine (Key switch should be turned ON).
Location:	Engine start switch located at base, on the Turntable control panel.

© 2025 Enter your company name

Location Image:

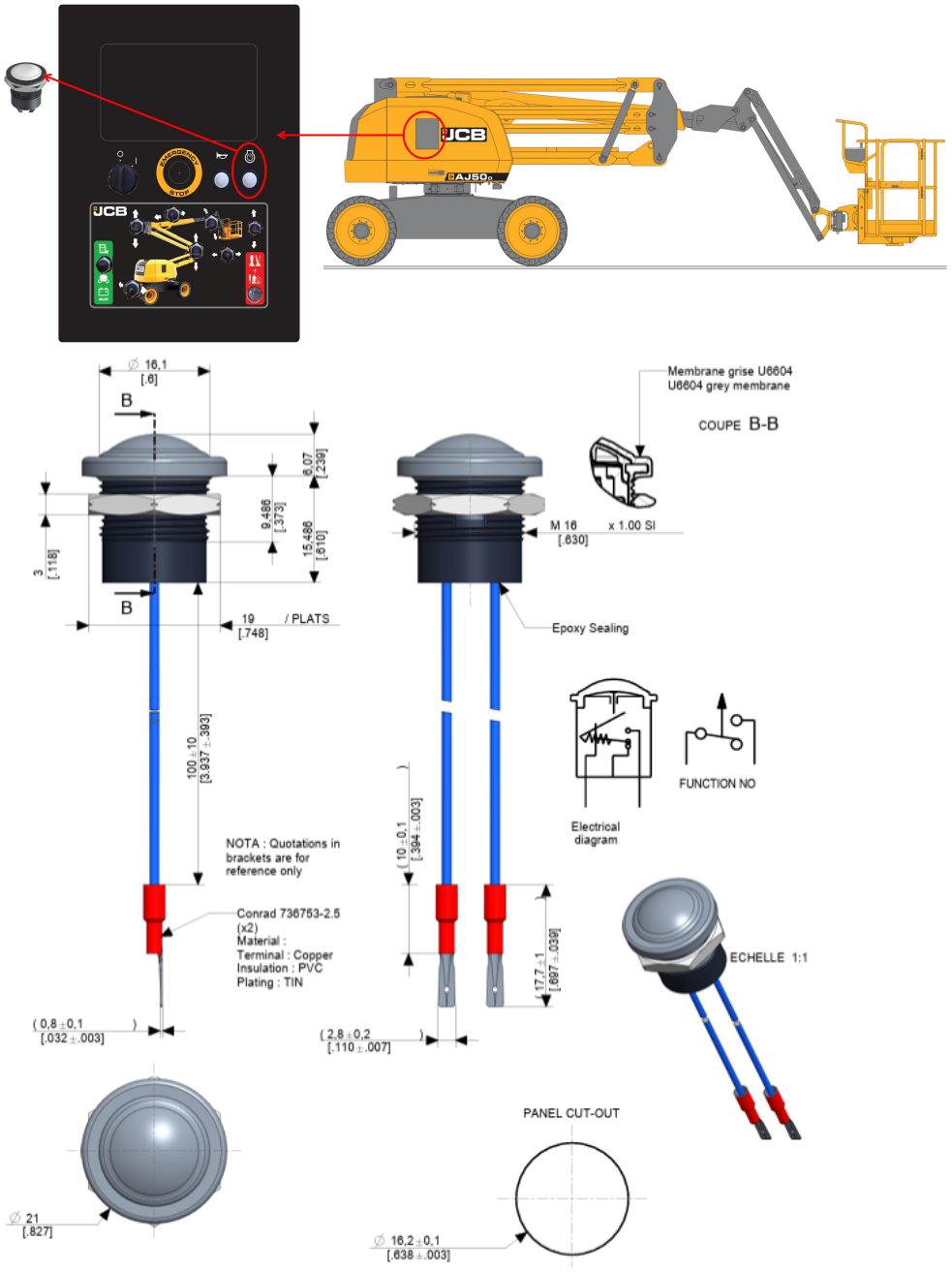

Signal:

Pin Number	Description	Connector number	Wire number(s)	Voltage unpressed	Voltage pressed
1	10V input				
2	Signal output to ECU (10V when pressed)				10V

© 2025 Enter your company name

Wires & Connectors:	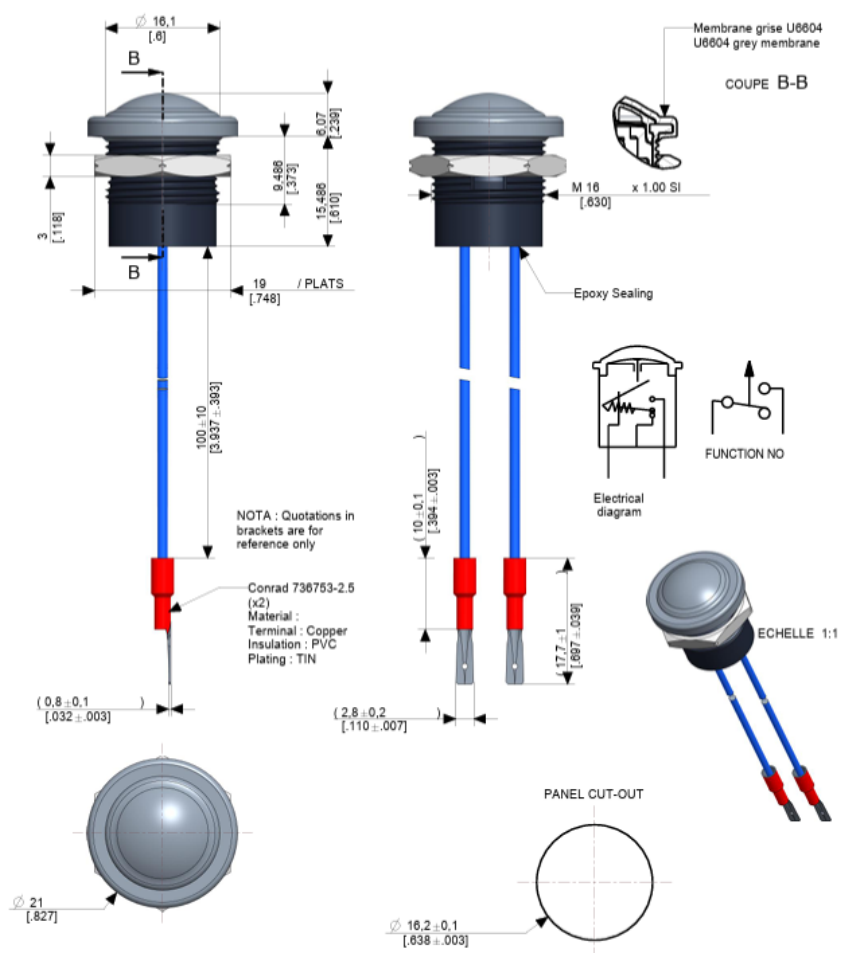
Internal Electrical Schematic:	
Testing:	Important: Use the multi-meter on the harness connector pins. DO NOT USE the meter on the ECU pins. Refer Test the Push Button Note-All the bush button fitted on machine are 10V ,normally open and closed when pressed. Diagnostic feedback on push button are coming from ECU. 1. Check supply at wiring harness terminal-1 with (respect to ground) on push button (when not pressed). It should read 10V. 2. Check the voltage at wiring harness terminal-2 on push button (When not pressed). It should read 2-3V.

© 2025 Enter your company name

<table>
<tr><td></td><td>3. Check the continuity between terminal 1 & 2 after pressing the push button. It should buzz.

4. If there is continuity and we are getting 10V supply then it may be internal damage to push button.

5. If issue still there replace the push button.</td></tr>
<tr><td>Expected Values:</td><td></td></tr>
<tr><td>Related Fault Codes:</td><td>
<table>
<tr><th>Fault Code</th><th>Description</th></tr>
<tr><td>B1050-17</td><td>Engine start button short circuit to high at the turntable control station</td></tr>
<tr><td>B1051-16</td><td>Engine start button is short circuit to low at the turntable control station</td></tr>
<tr><td>B1052-24</td><td>Engine start button stuck on for longer than 10 seconds at the turntable control station</td></tr>
</table>
</td></tr>
</table>

4.40.12 Base/Platform Enable Switch

Component:	Base/Platform Enable Switch
Function:	Base / Platform Enable switch is for Indication that Machine is moving or coming, so that the place will be clear for safety.
Location:	Base / Platform Enable switch located at base, on the Turntable control panel.

© 2025 Enter your company name

Location Image:

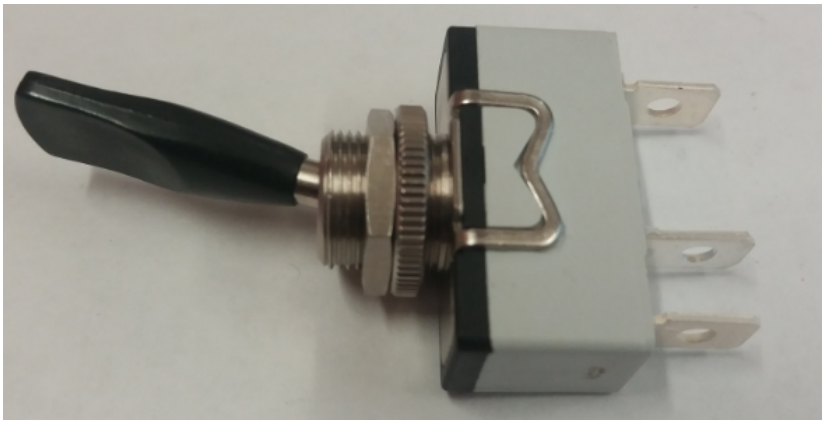

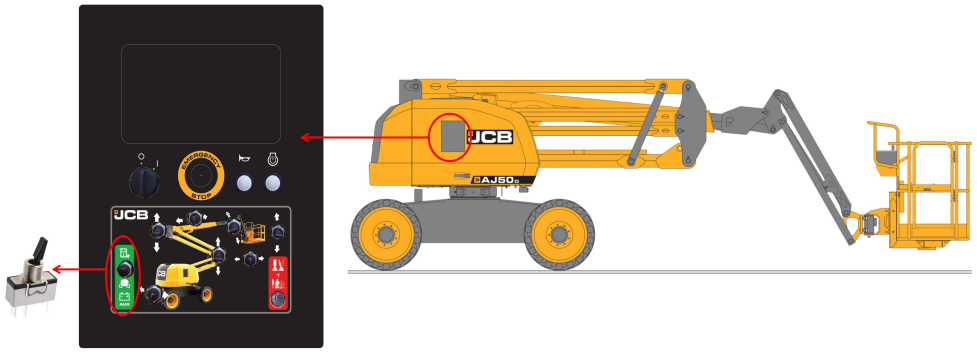

Signal:

Pin Number	Description/ Signal	Connector number	Wire number(s)	Voltage unpressed	Voltage pressed
1	Base Enable	C201-1_TCP	47		10V
2	Power in (10V)	C201-2_TCP	1030A, 1034	10V	NA
3	Platform enable	C201-3_TCP	46		10V

© 2025 Enter your company name

Wires & Connectors:

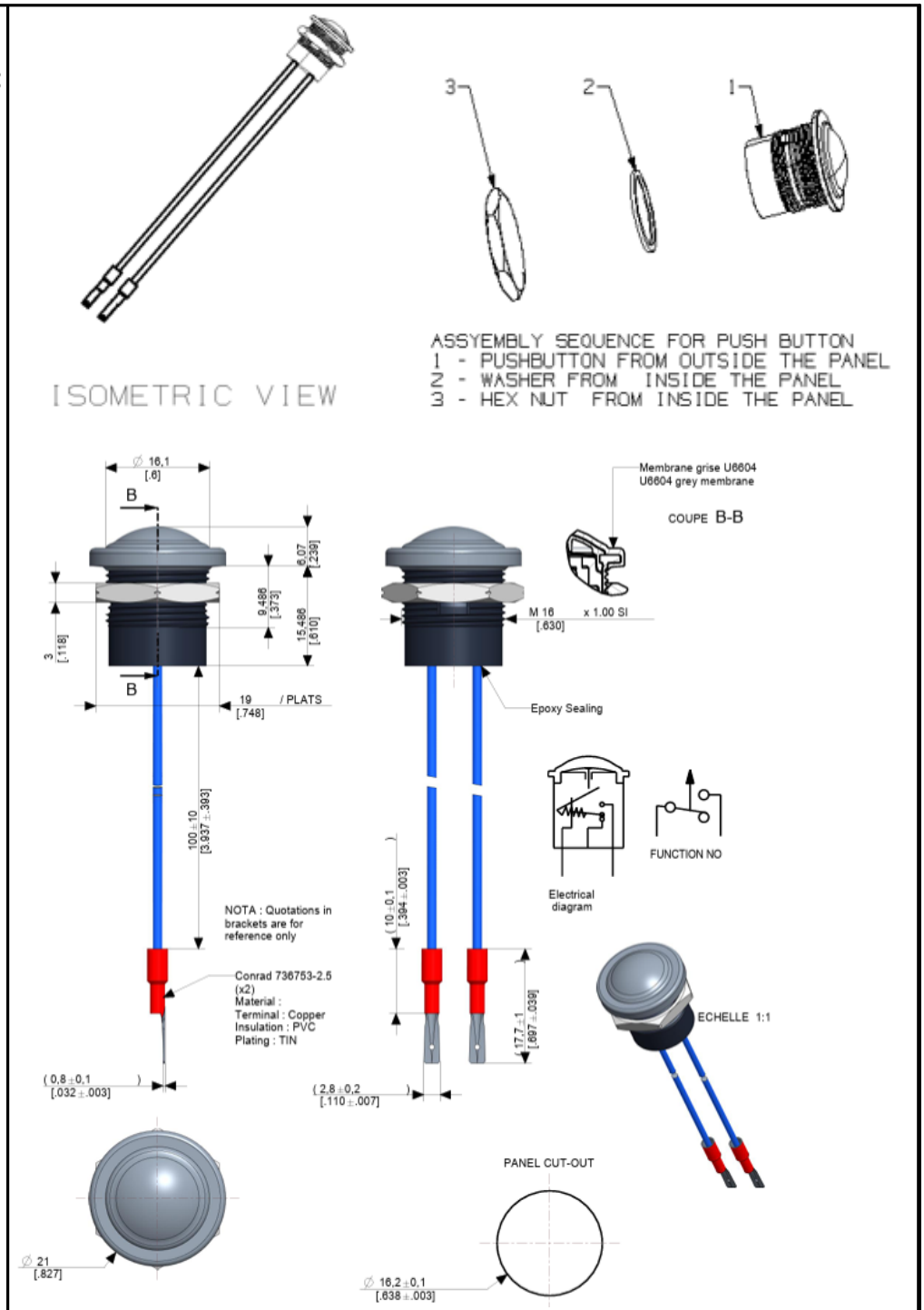

Internal Electrical Schematic:

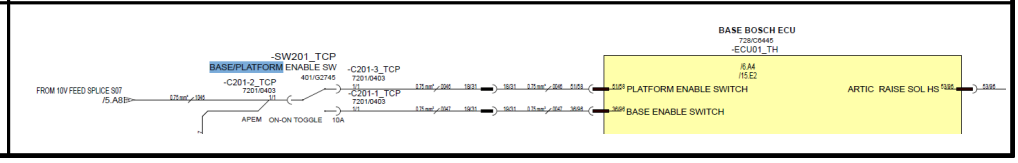

<table>
<tr><td>Testing:</td><td>Important: Use the multi-meter on the harness connector pins. DO NOT USE the meter on the ECU pins.

Note- Override switch and the base/ platform enable are the same switch at the base control panel. There are NO in state

1. There are3 contact on the back of switch.

2. Check terminal 1,2 & 3 connected correctly with wiring harness terminal 1,2 & 3 respectively.

3. Terminal 2 is for incoming supply

4. Check continuity between ‘terminal 2 & terminal 3’ and ‘terminal 2 & terminal 1’. It should buzz for one combination and should not buzz for other. When switch is pressed, it should buzz vice verse.

5. Check supply at terminal 2. It should read 10V.

6. If there is no 10V then investigate wiring as per schematic.

7. If there is 10V available and continuity is OK then it should be internal damage to switch. Replace it.</td></tr>
<tr><td>Expected Values:</td><td></td></tr>
<tr><td>Related Fault Codes:</td><td>
<table>
<tr><th>Fault Code</th><th>Description</th></tr>
<tr><td>B1005-17</td><td>Base enable switch short circuit to high >10.5V</td></tr>
<tr><td>B1006-17</td><td>Platform enable switch is short circuit to high >10.5V</td></tr>
<tr><td>B1007-92</td><td>Base enable and platform enable are both active</td></tr>
<tr><td>B1008-16</td><td>Base enable switch is short circuit to low</td></tr>
<tr><td>B1009-16</td><td>Platform enable short circuit to low</td></tr>
<tr><td>B1010-13</td><td>Base enable switch and platform enable switch open circuit</td></tr>
</table>
</td></tr>
</table>

4.40.13 Main Boom Raise/Lower Switch(TCP)

Component:	Main Boom Raise/Lower Switch(TCP)
Function:	Main boom lift switch is for to lift the main boom in up or down directions.
Location:	Main boom lift switch located at base, on the Turntable control panel.

© 2025 Enter your company name

Location Image:

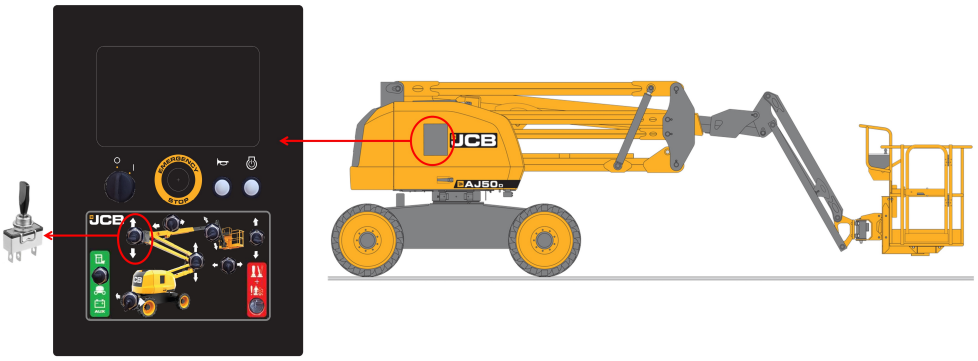

Signal:

Pin Number	Description/ Signal	Connector number	Wire number(s)	Voltage unpressed	Voltage pressed
1	Main boom Lower	C109-1_TCP	51	2.7V	10V
2	Power in (10V)	C109-2_TCP	1035, 1036	10V	NA
3	Main boom Raise	C109-3_TCP	50	3.4V	10V

Wires & Connectors:

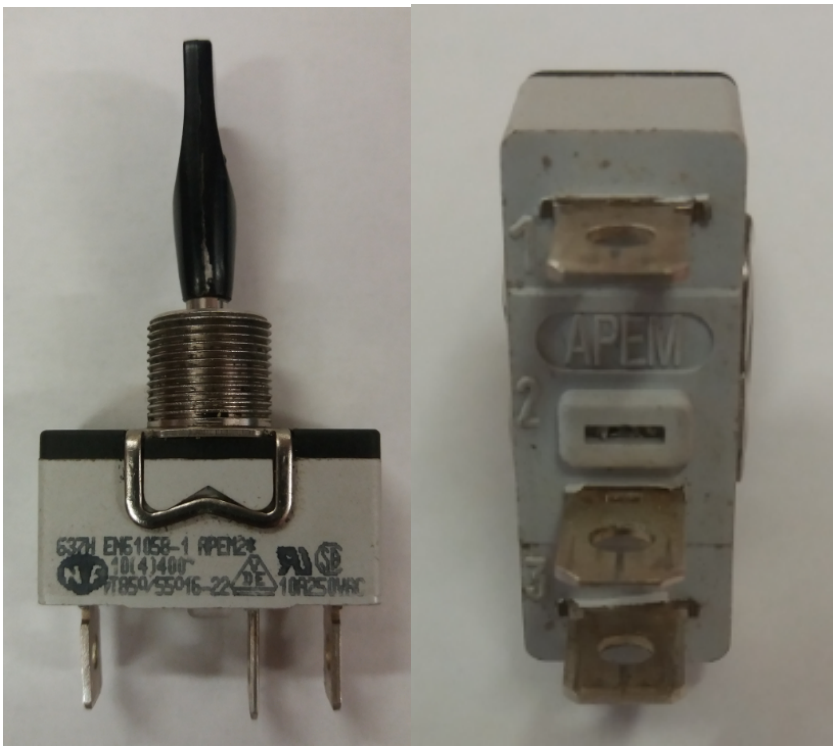

Internal Electrical Schematic:

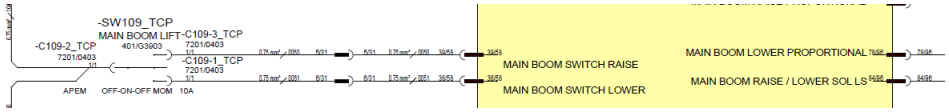

© 2025 Enter your company name

Testing:	Important: Use the multi-meter on the harness connector pins. DO NOT USE the meter on the ECU pins. Refer ' Test OFF-ON-OFF Momentary Toggle switch' 1. There are 3 contact on the back of switch. 2. Check terminal 1, 2 & 3 connected correctly with wiring harness terminal 1,2 & 3 respectively. 3Terminal 2 is for incoming supply 4. Check continuity between 'terminal 2 & terminal 3' and 'terminal 2 & terminal 1'. It should not buzz 5. When switch is pressed up. Terminal 2 should buzz with bottom terminal & when switch is pressed down. Terminal 2 should buzz with up terminal. 6. Check supply at terminal 2. It should read 10V. 7. If there is no 10V then investigate wiring as per schematic. 8. If there is 10V available and continuity is OK then it should be internal damage to switch. Replace it.
Expected Values:	
Related Fault Codes:	**Fault Code** / **Description** B1126-17 MAIN BOOM Lower Limit Switch 1 SC to High B1127-17 MAIN BOOM Lower Limit Switch 2 SC to High B1128-16 MAIN BOOM Lower Limit Switch 1 SC to Low B1129-13 MAIN BOOM Lower Limit Switch 1 AND Switch 2 OC B1130-16 MAIN BOOM Lower Limit Switch 2 SC to Low B1131-2F MAIN BOOM Lower Limit Switch 1 AND Switch 2 Short to 10V

4.40.14 Articulated Boom Raise/Lower switch(TCP)

Component:	Articulated Boom Raise/Lower switch(TCP)
Function:	Articulated boom switch is for to lift the articular boom in up or down directions.
Location:	Articulated boom switch located at base, on the Turntable control panel.

© 2025 Enter your company name

Location Image:

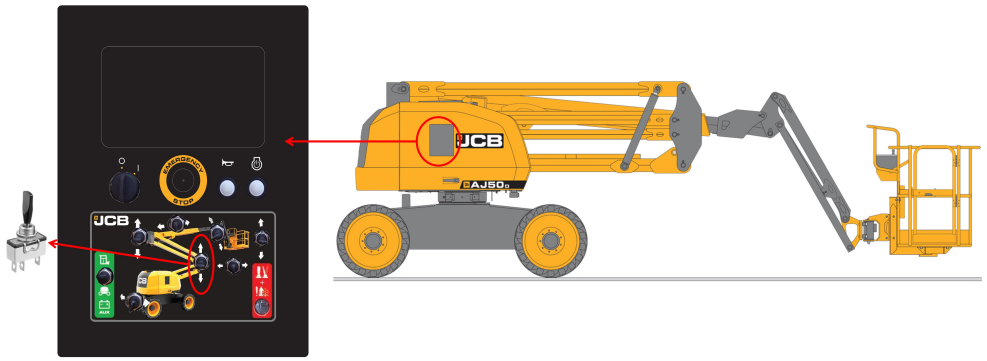

Signal:

Pin Number	Description/ Signal	Connector number	Wire number(s)	Voltage unpressed	Voltage pressed
1	Artic Lower	C115-1_TCP	55	2.7V	10V
2	Power in (10V)	C115-2_TCP	1035, 1036	10V	NA
3	Artic Raise	C115-3_TCP	54	3.4V	10V

Wires & Connectors:

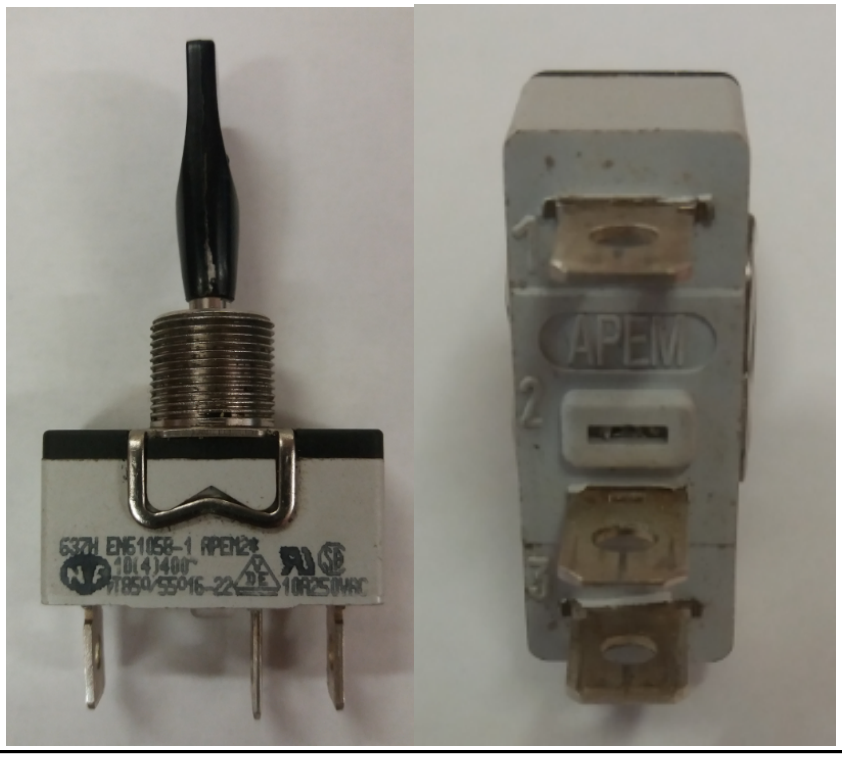

Internal Electrical Schematic:

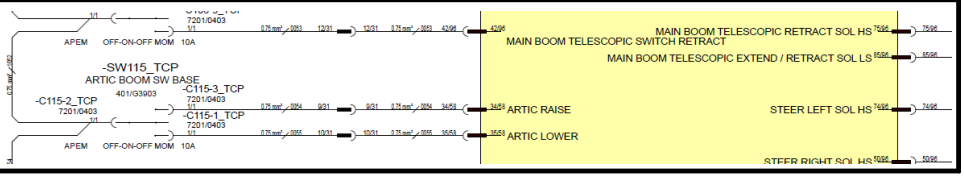

© 2025 Enter your company name

Testing:	Important: Use the multi-meter on the harness connector pins. DO NOT USE the meter on the ECU pins. Refer ' Test OFF-ON-OFF Momentary Toggle switch' 1. There are 3 contact on the back of switch. 2. Check terminal 1, 2 & 3 connected correctly with wiring harness terminal 1,2 & 3 respectively. 3. Terminal 2 is for incoming supply 4. Check continuity between 'terminal 2 & terminal 3' and 'terminal 2 & terminal 1'. It should not buzz 5. When switch is pressed up. Terminal 2 should buzz with bottom terminal & when switch is pressed down. Terminal 2 should buzz with up terminal. 6. Check supply at terminal 2. It should read 10V. 7. If there is no 10V then investigate wiring as per schematic. 8. If there is 10V available and continuity is OK then it should be internal damage to switch. Replace it.
Expected Values:	
Related Fault Codes:	**Fault Code** / **Description** B1096-17 / ARTICULATED BOOM RAISE Switch SC to High B1097-17 / ARTICULATED BOOM LOWER Switch SC to High B1098-92 / ARTICULATED BOOM RAISE & LOWER Switches both activated (5 - 10V) B1099-16 / ARTICULATED BOOM RAISE Switch SC to Low B1100-16 / ARTICULATED BOOM LOWER Switch SC to Low

4.40.15 Jib Raise/Lower Switch(TCP)

Component:	Jib Raise/Lower Switch(TCP)
Function:	Jib switch is for to lift the Jib in up or down directions.
Location:	Jib switch located at base, on the Turntable control panel.

© 2025 Enter your company name

Location Image:

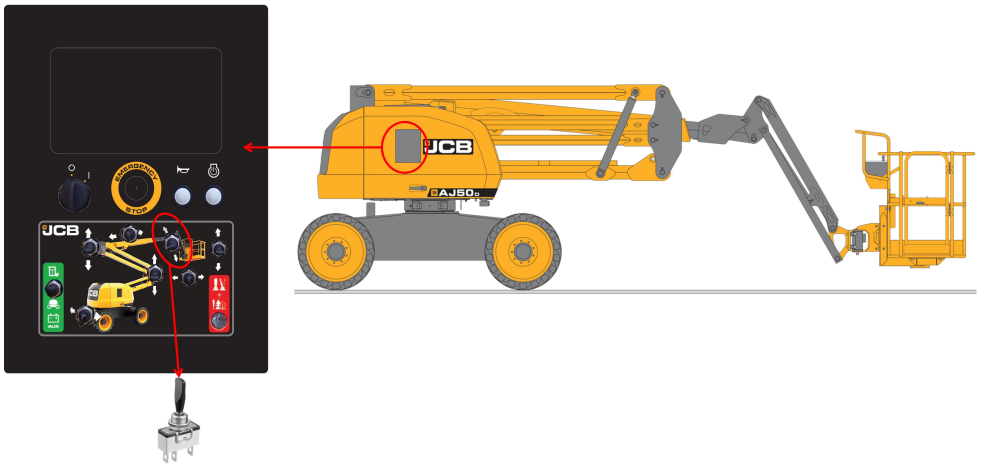

Signal:

Pin Number	Description/ Signal	Connector number	Wire number(s)	Voltage unpressed	Voltage pressed
1	Jib Lower	C113-1_TCP	59	2.7V	10V
2	Power in (10V)	C113-2_TCP	1039, 1040	10V	NA
3	Jib Raise	C113-3_TCP	58	2.7V	10V

Wires & Connectors:



© 2025 Enter your company name

Internal Electrical Schematic:	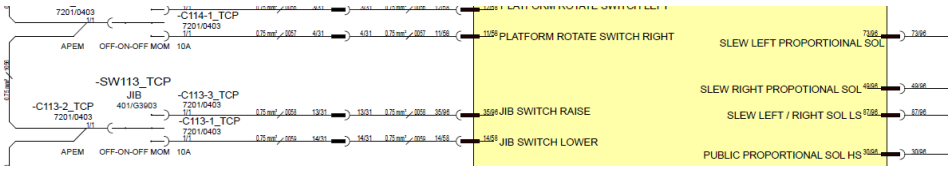
Testing:	Important: Use the multi-meter on the harness connector pins. DO NOT USE the meter on the ECU pins. 1. There are 3 contact on the back of switch. 2. Check terminal 1, 2 & 3 connected correctly with wiring harness terminal 1,2 & 3 respectively. 3. Terminal 2 is for incoming supply 4. Check continuity between ‘terminal 2 & terminal 3’ and ‘terminal 2 & terminal 1’. It should not buzz 5. When switch is pressed up. Terminal 2 should buzz with bottom terminal & when switch is pressed down. Terminal 2 should buzz with up terminal. 6. Check supply at terminal 2. It should read 10V. 7. If there is no 10V then investigate wiring as per schematic. 8. If there is 10V available and continuity is OK then it should be internal damage to switch. Replace it.
Expected Values:	
Related Fault Codes:	**Fault Code** / **Description** B1111-17 / JIB RAISE Switch SC to High B1112-17 / JIB LOWER Switch SC to High B1113-92 / JIB RAISE & LOWER Switches both activated (5 - 10V) B1114-16 / JIB RAISE Switch SC to Low B1115-16 / JIB LOWER Switch SC to Low

4.40.16 Main Boom Telescope Extend/Retract Switch(TCP)

Component:	Main Boom Telescope Extend/Retract Switch(TCP)
Function:	Main boom telescope switch is for to lift the articular boom in up or down directions.

© 2025 Enter your company name

Location:	Main boom telescope switch located at base, on the Turntable control panel.
Location Image:	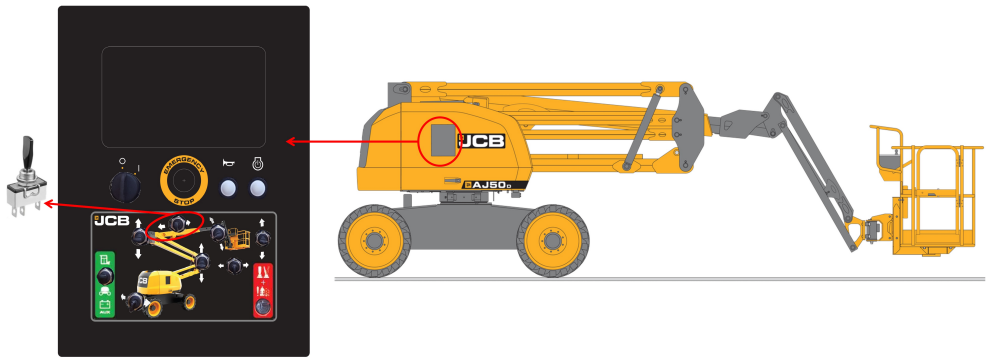

Signal:

Pin Number	Description/ Signal	Connector number	Wire number(s)	Voltage unpressed	Voltage pressed
1	Telescopic Extend	C108-1_TCP	52	2.7V	10V
2	Power in (10V)	C108-2_TCP	1036, 1037	10V	NA
3	Telescopic Retract	C108-3_TCP	53	2.7V	10V

Wires & Connectors:



© 2025 Enter your company name

Internal Electrical Schematic:	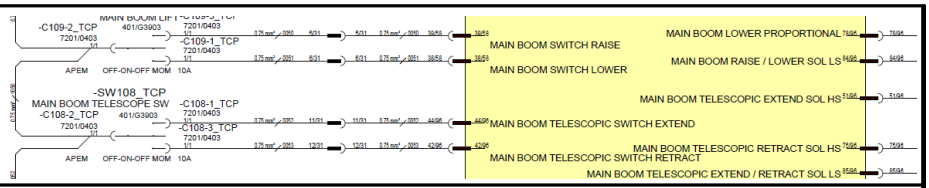
Testing:	Important: Use the multi-meter on the harness connector pins. DO NOT USE the meter on the ECU pins 1. There are 3 contact on the back of switch. 2. Check terminal 1, 2 & 3 connected correctly with wiring harness terminal 1,2 & 3 respectively. 3. Terminal 2 is for incoming supply 4. Check continuity between ‘terminal 2 & terminal 3’ and ‘terminal 2 & terminal 1’. It should not buzz 5. When switch is pressed up. Terminal 2 should buzz with bottom terminal & when switch is pressed down. Terminal 2 should buzz with up terminal. 6. Check supply at terminal 2. It should read 10V. 7. If there is no 10V then investigate wiring as per schematic. 8. If there is 10V available and continuity is OK then it should be internal damage to switch. Replace it.
Expected Values:	
Related Fault Codes:	**Fault Code** / **Description** B1101-17 — MAIN BOOM EXTEND Switch SC to High B1102-17 — MAIN BOOM RETRACT Switch SC to High B1103-92 — MAIN BOOM EXTEND & RETRACT Switches both activated (5 - 10V) B1104-16 — MAIN BOOM EXTEND Switch SC to Low B1105-16 — MAIN BOOM RETRACT Switch SC to Low

4.40.17 Platform Rotate Left/Right Switch(TCP)

Component:	Platform Rotate Left/Right Switch(TCP)
Function:	Platform rotate switch is for to rotate the Basket in left or right directions.

© 2025 Enter your company name

Location:	Platform rotate switch located at base, on the Turntable control panel.
Location Image:	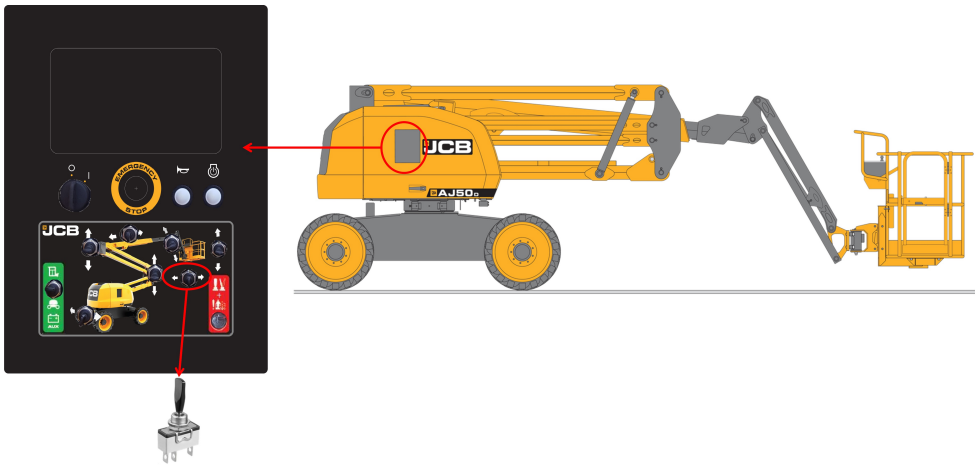

Signal:

Pin Number	Description/ Signal	Connector number	Wire number(s)	Voltage unpressed	Voltage pressed
1	Platform Rotate Right	C114-1_TCP	57	2.7V	10V
2	Power in (10V)	C114-2_TCP	1038, 1039	10V	NA
3	Platform Rotate Left	C114-3_TCP	56	3.4V	10V

Wires & Connectors:

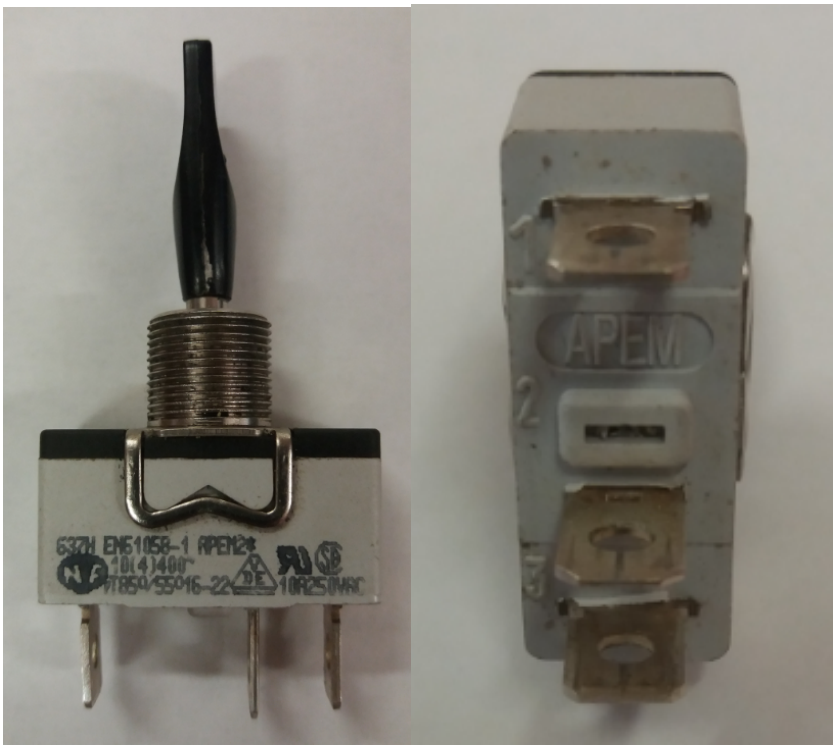

© 2025 Enter your company name

Internal Electrical Schematic:	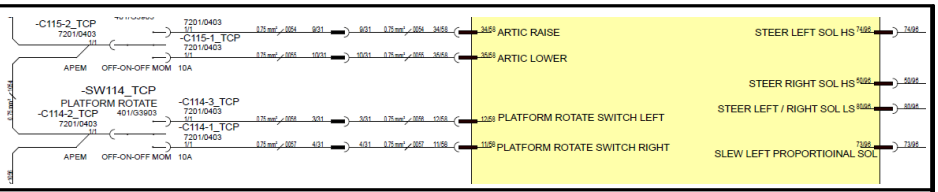
Testing:	Important: Use the multi-meter on the harness connector pins. DO NOT USE the meter on the ECU pins. Refer ' Test OFF-ON-OFF Momentary Toggle switch' 1. There are 3 contact on the back of switch. 2. Check terminal 1, 2 & 3 connected correctly with wiring harness terminal 1,2 & 3 respectively. 3. Terminal 2 is for incoming supply 4. Check continuity between ‘terminal 2 & terminal 3’ and ‘terminal 2 & terminal 1’. It should not buzz 5. When switch is pressed up. Terminal 2 should buzz with bottom terminal & when switch is pressed down. Terminal 2 should buzz with up terminal. 6. Check supply at terminal 2. It should read 10V. 7. If there is no 10V then investigate wiring as per schematic. 8. If there is 10V available and continuity is OK then it should be internal damage to switch. Replace it.
Expected Values:	
Related Fault Codes:	**Fault Code** / **Description** B1106-17 / PLATFORM ROTATE RIGHT Switch SC to High B1107-17 / PLATFORM ROTATE LEFT Switch SC to High B1108-92 / PLATFORM ROTATE RIGHT & LEFT Switches both activated (5 - 10V) B1109-16 / PLATFORM ROTATE RIGHT Switch SC to Low B1110-16 / PLATFORM ROTATE LEFT Switch SC to Low

4.40.18 Platform Leveling Raise/Lower Switch(TCP)

Component:	Platform Leveling Raise/Lower Switch(TCP)

© 2025 Enter your company name

Function:	Platform leveling switch is for to raise the Platform in up or down directions.
Location:	Platform leveling switch located at base, on the Turntable control panel.
Location Image:	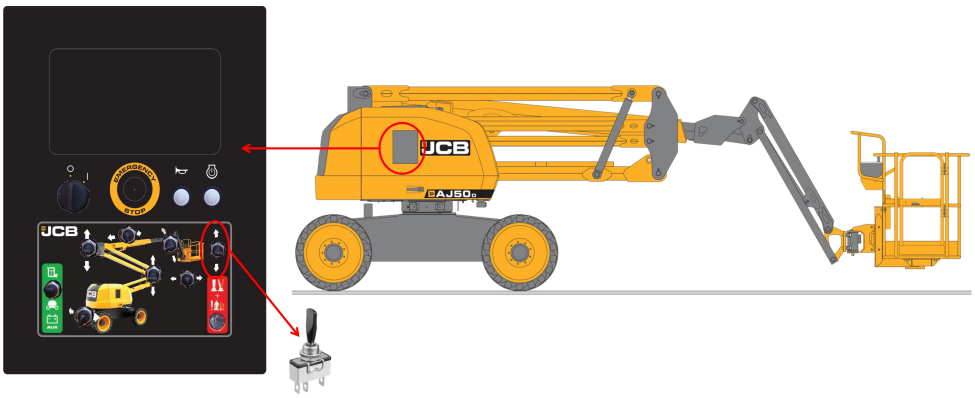

Signal:

Pin Number	Description/ Signal	Connector number	Wire number(s)	Voltage unpressed	Voltage pressed
1	Platform Leveling Lower	C112-1_TCP	61	2.7V	10V
2	Power in (10V)	C112-2_TCP	1040, 1041	10V	NA
3	Platform Leveling Raise	C112-3_TCP	60	2.7V	10V

Wires & Connectors:

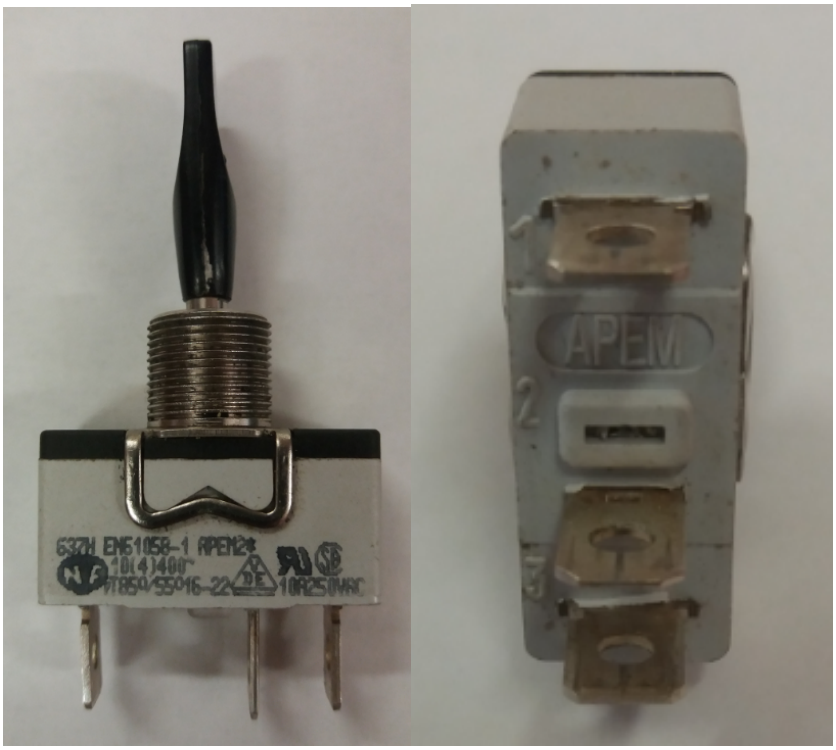

© 2025 Enter your company name

Internal Electrical Schematic:	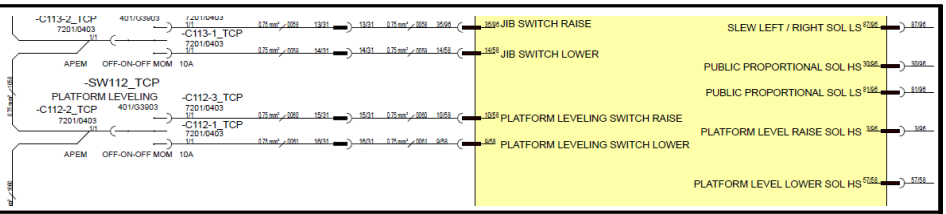
Testing:	Important: Use the multi-meter on the harness connector pins. DO NOT USE the meter on the ECU pins. 1. There are 3 contact on the back of switch. 2. Check terminal 1, 2 & 3 connected correctly with wiring harness terminal 1,2 & 3 respectively. 3. Terminal 2 is for incoming supply 4. Check continuity between ‘terminal 2 & terminal 3’ and ‘terminal 2 & terminal 1’. It should not buzz 5. When switch is pressed up. Terminal 2 should buzz with bottom terminal & when switch is pressed down. Terminal 2 should buzz with up terminal. 6. Check supply at terminal 2. It should read 10V. 7. If there is no 10V then investigate wiring as per schematic. 8. If there is 10V available and continuity is OK then it should be internal damage to switch. Replace it.
Expected Values:	
Related Fault Codes:	**Fault Code** / **Description** B1071-17 — PLATFORM LEVELLING RAISE Switch SC to High B1072-17 — PLATFORM LEVELLING LOWER Switch SC to High B1073-92 — PLATFORM LEVELLING RAISE and LOWER Switches both activated (5 - 10V) B1074-16 — PLATFORM LEVELLING RAISE Switch SC to Low B1075-16 — PLATFORM LEVELLING LOWER Switch SC to Low

4.40.19 Over Ride Switch

Component:	Over Ride Switch

© 2025 Enter your company name

Function:	• The override switch is used for emergency purposes to allow someone to rescue incapacitated operated. • The switch needs to be held with the ignition cycle while switch is still pressed, on start up this will then allow one function at a time to be operated via the electric pump to bring the operator down. • As soon as the switch is released then override function will drop out. • If override is operated the machine will need to be checked over and the reset via service master tool. • This switch is an on - on switch. • Both contacts should always be on/off at opposite times otherwise the ecu will detect a fault
Location:	Override switch located at base, on the Turntable control panel.
Location Image:	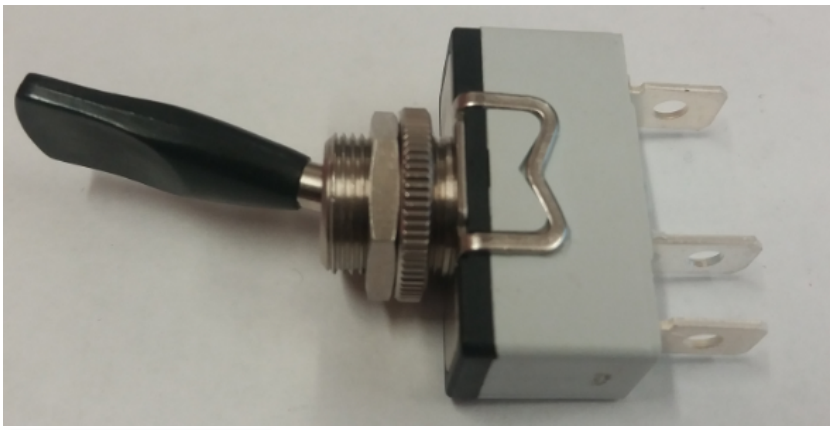 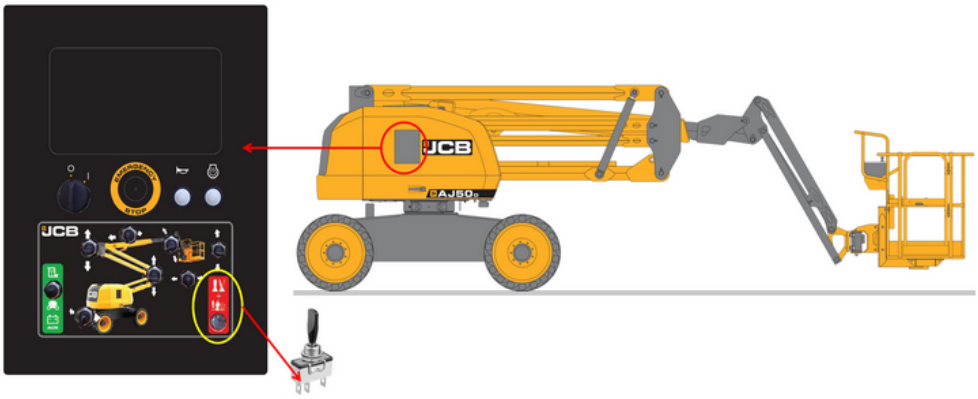

Signal:

Pin Number	Description/ Signal	Connector number	Wire number(s)	Voltage unpressed	Voltage pressed
1	Pressed Contact	C200-1_TCP	63	3.4V	10V
2	Power in (10V)	C200-2_TCP	1041	10V	NA

© 2025 Enter your company name

	3	Unpressed Contact	C200-3_TCP	62		10V

Wires & Connectors:

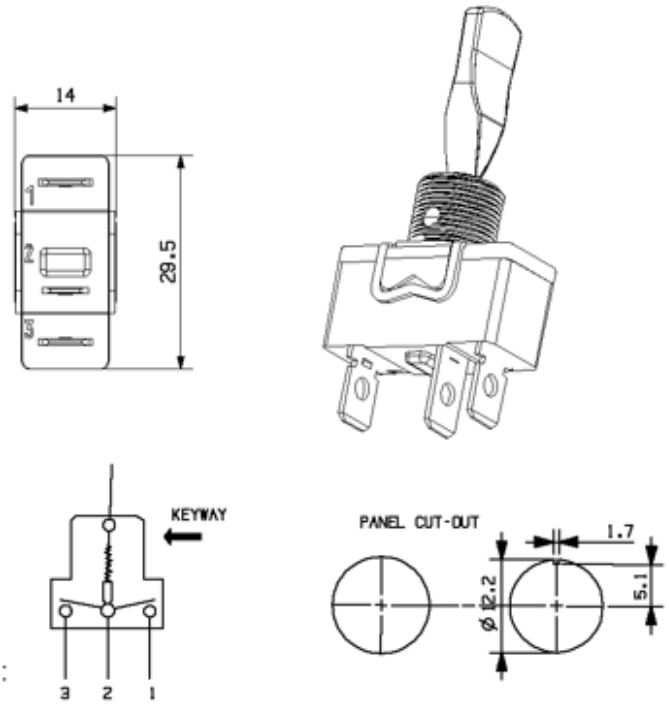

Internal Electrical Schematic:

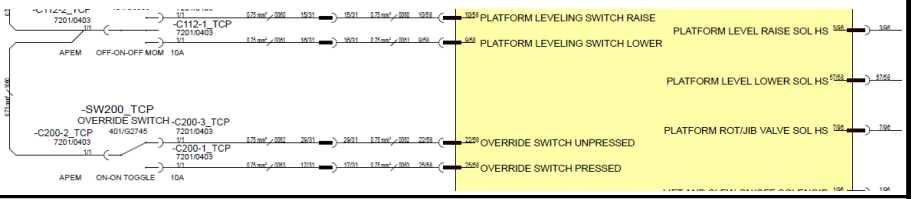

Testing:

Important: Use the multi-meter on the harness connector pins. DO NOT USE the meter on the ECU pins.

Note- Override switch and the base/ platform enable are the same switch at the base control panel. There are NO in state

1. There are 3 contact on the back of switch.

2. Check terminal 1, 2 & 3 connected correctly with wiring harness terminal 1,2 & 3 respectively.

3. Terminal 2 is for incoming supply

4. Check continuity between ‘terminal 2 & terminal 3’ and ‘terminal 2 & terminal 1’. It should not buzz

5. When switch is pressed up. Terminal 2 should buzz with bottom terminal & when switch is pressed down. Terminal 2 should buzz with up terminal.

© 2025 Enter your company name

<table>
<tr><td></td><td>6. Check supply at terminal 2. It should read 10V.

7. If there is no 10V then investigate wiring as per schematic.

8. If there is 10V available and continuity is OK then it should be internal damage to switch. Replace it.</td></tr>
<tr><td>Expected Values:</td><td></td></tr>
<tr><td>Related Fault Codes:</td><td>
<table>
<tr><th>Fault Code</th><th>Description</th></tr>
<tr><td>B1058-17</td><td>Override Switch is short circuit to high at the base control station</td></tr>
<tr><td>B1059-16</td><td>Override switch pressed short circuit to low</td></tr>
<tr><td>B1060-13</td><td>Override switch is open circuit on both contacts</td></tr>
<tr><td>B1061-17</td><td>Override switch unpressed short circuit to high</td></tr>
<tr><td>B1062-16</td><td>Override unpressed position is short circuit to low</td></tr>
<tr><td>B1063-92</td><td>Override Switch Pressed and Override Switch Unpressed Both activated (5-10V)</td></tr>
</table>
</td></tr>
</table>

4.40.20 Buzzer(TCP)

Component:	Buzzer(TCP)
Function:	• The buzzer is there to warn the operator when either an fault or error has happened with the machine or to warn of machine is awaiting for operator action. • For example, if the foot pedal is pressed for longer than 10 seconds without a function being pressed,this will time out and make the buzzer sound. • The platform buzzer and the base buzzer should be a repeat of each other. • If 1 buzzer is working and the other is not then there is issue with the buzzer.
Location:	Inside the Base Control Box

© 2025 Enter your company name

Location Image:

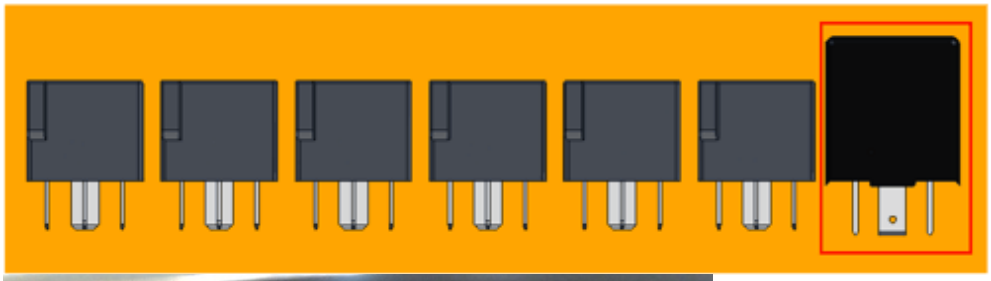

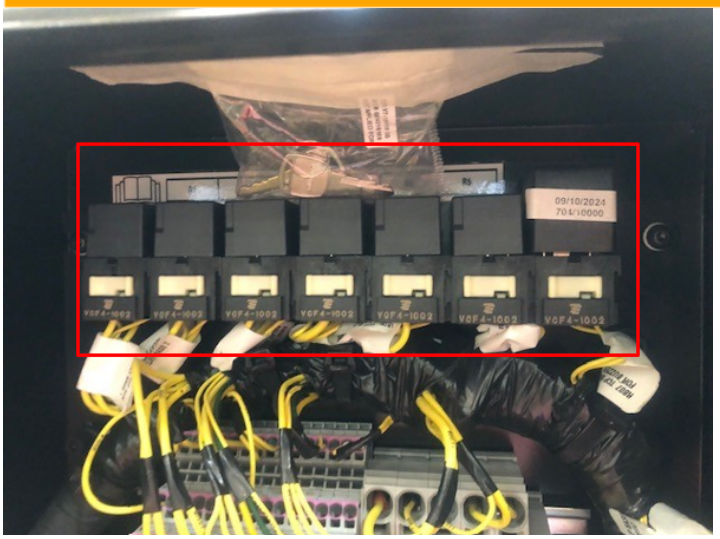

Signal:

Pin Number	Description	Wire Number
1	Buzzer HS	4024
2	Buzzer HS	-
3	-	-
4	GND	6024
5	-	-

© 2025 Enter your company name

Wires & Connectors:	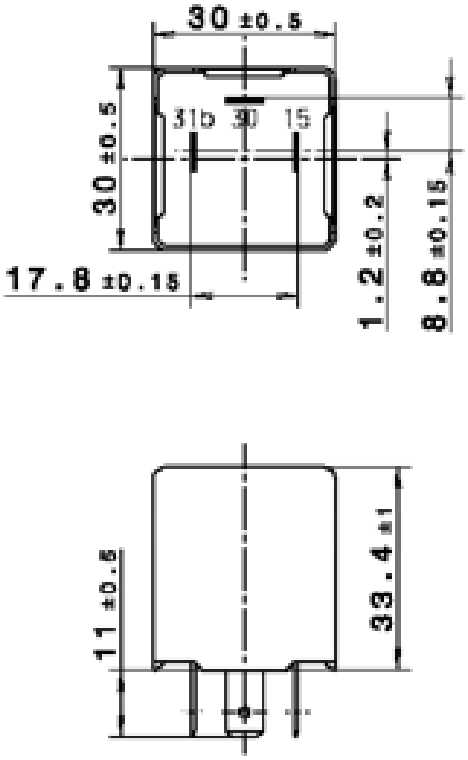
Internal Electrical Schematic:	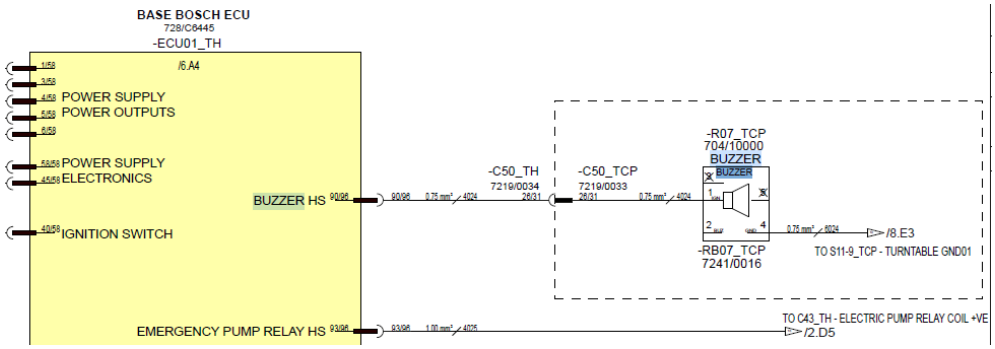
Testing:	Important: Use the multi-meter on the harness connector pins. DO NOT USE the meter on the ECU pins. 1. There are two buzzer fitted on machine one is inside base control panel and another is inside platform control panel. Ensure no water ingress 2. Check supply at connector RB07_TCP pin no 1 & 4 This should read 12V 3. If there is no supply check wiring as per the schematic 4. If there is supply on harness there may be internal damage to buzzer 5. If harness continuity is OK replace the Buzzer

© 2025 Enter your company name

	Note-Remove the buzzer from its holder and wire to 12V and GND signals and the buzzer should sound.
Expected Values:	
Related Fault Codes:	<table><tr><th>Fault Code</th><th>Description</th></tr><tr><td>B1177-16</td><td>BUZZER SC to Low</td></tr><tr><td>B1178-13</td><td>BUZZER OC</td></tr></table>

4.40.21 Display 7''

Component:	Display 7"
Function:	The display is there to the operator information and also assist with machine maintenance.
Location:	The display is located in the turntable control panel.
Location Image:	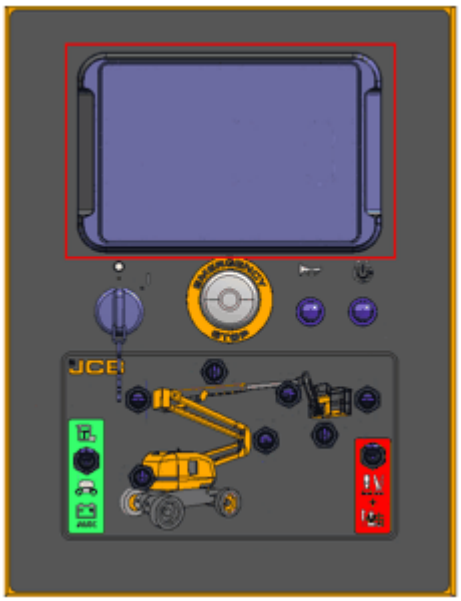

© 2025 Enter your company name

Signal:

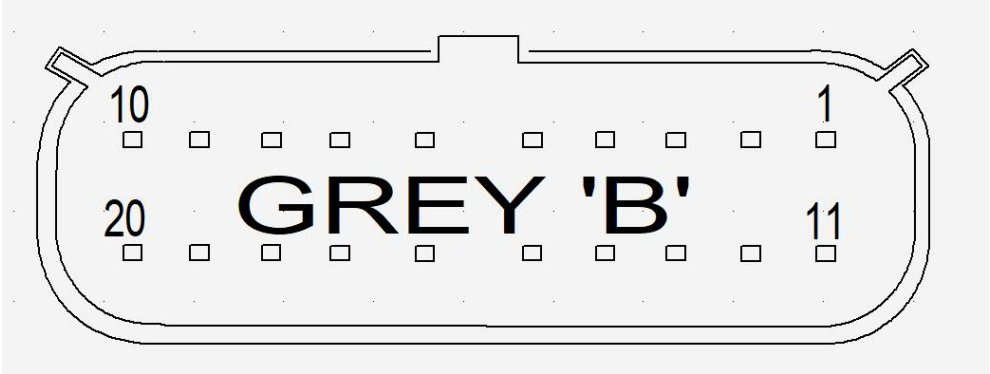

J1 - 332/E3213

Wires & Connectors:

Connector J1		
Pin Number	**Signal**	**Wire number in harness**
1		
2	Ignition wire	1076
3		
4		
5		
6		
7	CAN L	Green CAN cable
8	CAN H	Yellow CAN cable

Connector J2 - not used

Internal Electrical Schematic:

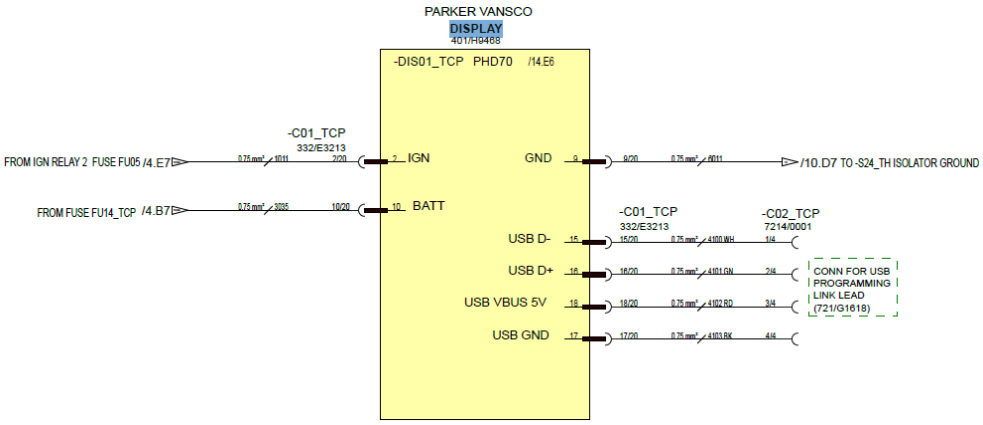

© 2025 Enter your company name

	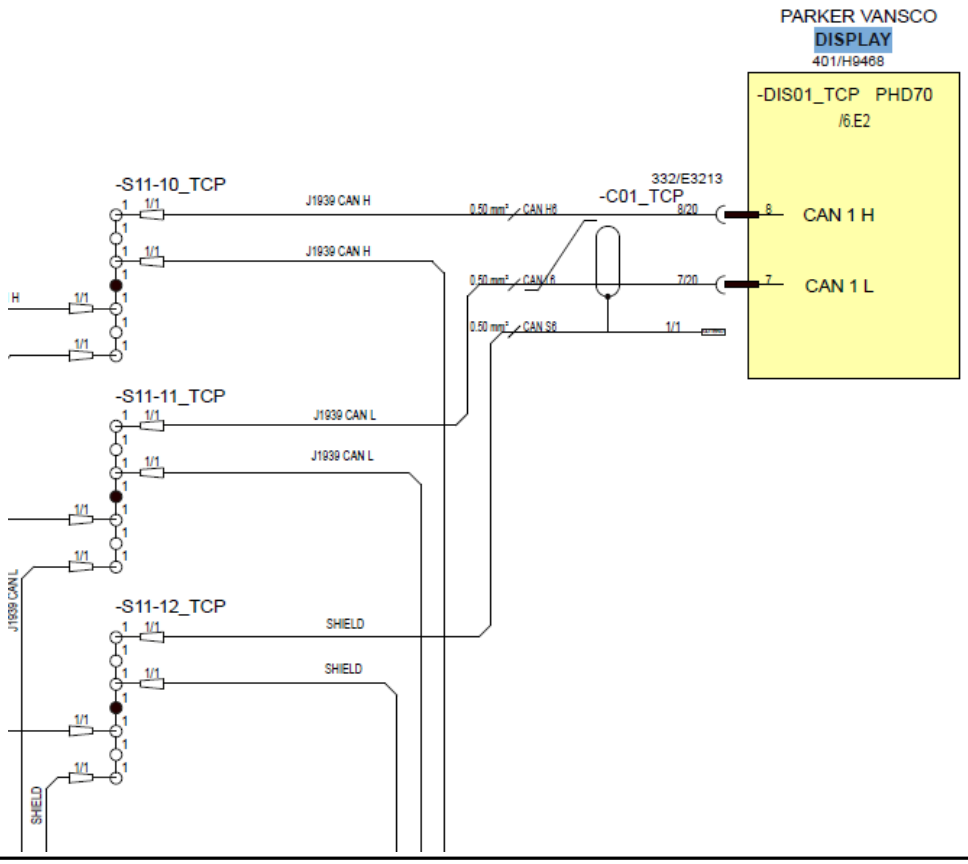
Testing:	1. Check IGN RELAY 2 FUSE FU05 and wire 1011. 2. Check FUSE FU14 and wire 3035. 3. Check Ground cable 6011. 4. Check connector and wire for any damage or loose connection.
Expected Values:	
Related Fault Codes:	

4.40.22 TCP Interface Connector

Component :	TCP Interface Connector

© 2025 Enter your company name

Function:	There is 2 connectors that interface with the machine. Feed the Turntable harness around the base Control panel C39_TH and C50_TH.
Location:	On Base Control Box RHS
Location Image:	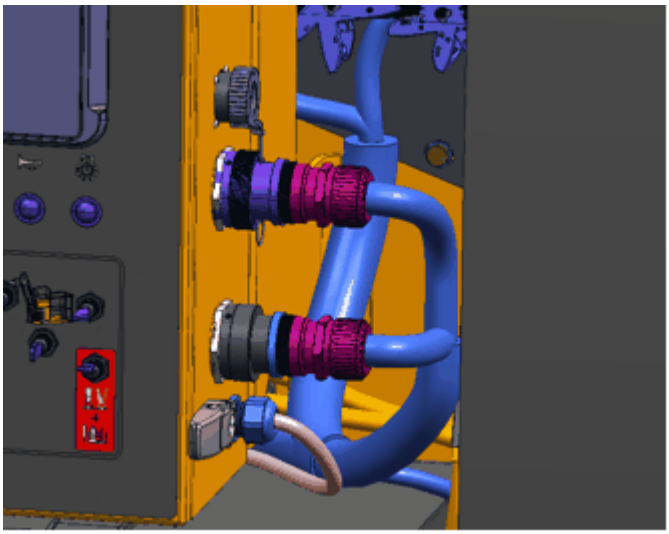 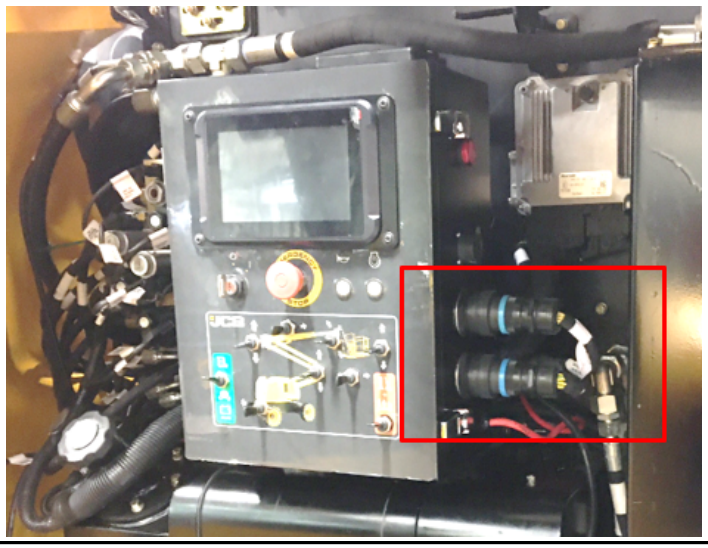

Signal:

C39 pin out		
Pin Number	**Description**	**Wire number**
1	FU03_TCP to Bosch ECU power supply	1018
2	FU09_TCP to pod box power hold relay	34
3	NOT USED	NOT USED
4	FU10_TCP to pod box starter relay	35
5	NOT USED	NOT USED
6	Alternator D+ to D+ relay	4005C
7	FY15_TCP to pod box power hold coil	3002

© 2025 Enter your company name

8	NOT USED	NOT USED
9	NOT USED	NOT USED
10	FU13_TCP to Livelink	3004
11	S11-3 Din rail terminal to Axle lock pressure sensor	1024A
12	FU06_TCP to platform ecu power supply	1025
13	CAN H J1939 to Livelink and platform	-
14	CAN L J1939 to Livelink and platform	-
15	CAN H J1939 to kohler engine	-
16	CAN L J1939 to kohler engine	-
17	FU11_TCP to work lights	1031
18	S11-18_TCP Terminal block to turntable earth	6063U
19	D+ signal to Livelink and Bosch base ECU	1032
20	CAN Shield J1939 to kohler engine	-
21	S11-11 terminal block to turntable ground	6061H
22	Display GND	6011
23	FU07_TCP to platform ecu supply	1026
24	S11-1_TCP to platform weight sensors	1027
25	CAN Shield to Livelink and platform	-
26	CAN H 15765 to kohler engine	-
27	CAN L 15765 to Kohler engine	-
28	S11-1_TCP to Tilt sensor	1028K
29	FU08_TCP to Bosch base ecu	1029A

C50 Pin out		
Pin Number	**Description**	**Wire number**
1	NOT USED	NOT USED
2	NOT USED	NOT USED
3	Platform rotate left switch to base ecu	56
4	Platform rotate right switch to base ecu	57
5	main boom raise switch to base ecu	50
6	main boom lower switch to base ecu	51
7	Slew right switch to base ecu	48
8	Slew left switch to base ecu	49
9	Artic boom raise switch to base ecu	54
10	Artic boom lower switch to base ecu	55
11	main boom telescope extend switch to base ecu	52
12	main boom telescope retract switch to base ecu	53
13	Jib Raise switch to base ecu	58

© 2025 Enter your company name

	14	Jib Lower switch to base ecu	59
	15	platform level raise switch to base ecu	60
	16	platform level lower switch to base ecu	61
	17	override ride switch pressed signal to base ecu	63
	18	platform enable switch to base ecu	46
	19	base enable switch to base ecu	47
	20	NOT USED	NOT USED
	21	horn switch to base ecu	65
	22	engine start switch to base ecu	66
	23	FU01_TCP ignition signal to base ecu	40
	24	E-Stop +ve signal to base ecu	41
	25	E-Stop -ve to base ecu	42
	26	ECU Buzzer output to buzzer	4024
	27	base ecu horn output to horn relay	4035
	28	Horn relay output to horn	43
	29	Override unpressed switch to base ecu	62
	30	base ecu 10V feed to panel switches	1030A
	31	base ecu 10V feed to panel switches	1030B

Wires & Connectors:

Turntable Interconnect C39
Turntable Interconnect C50

Connector C39_TCP:
Connector C50_TCP: 31 way Deutsch Inline connector HDP24-24-31PE

Connector C50_TCP Pin out information:

© 2025 Enter your company name

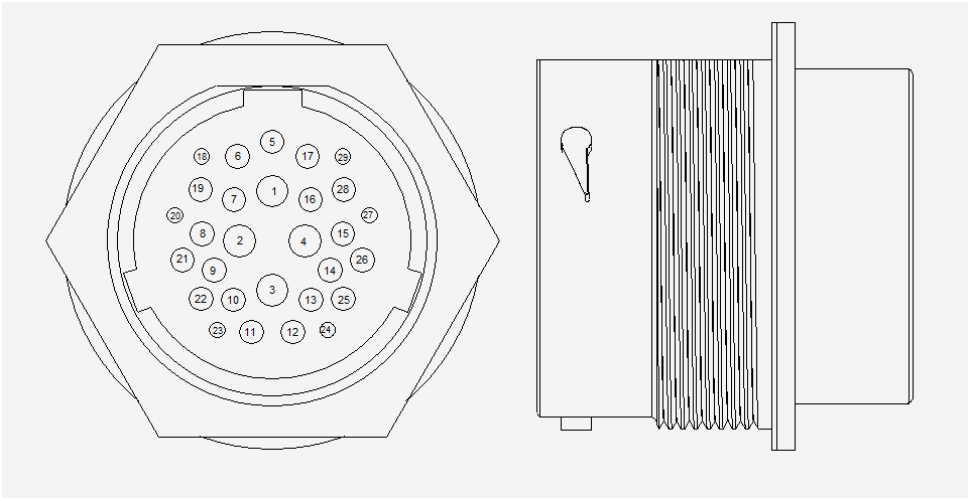

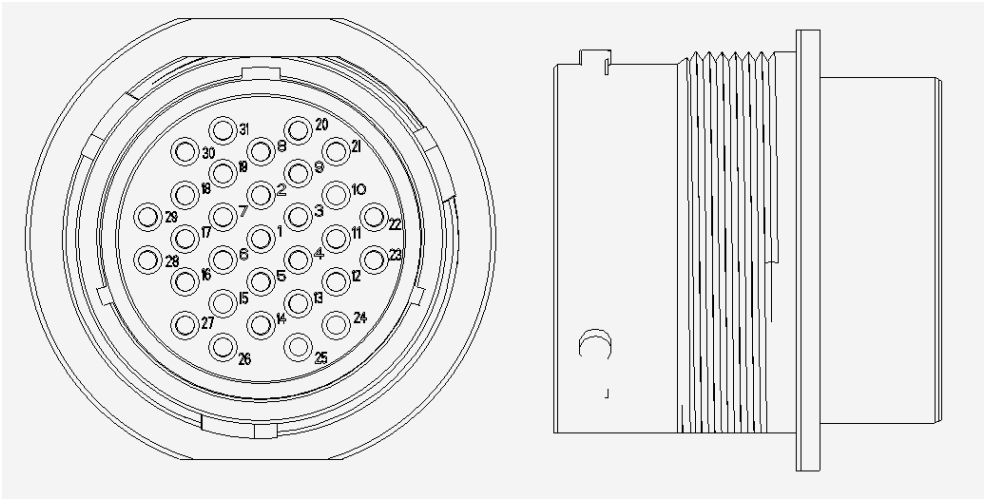

© 2025 Enter your company name

	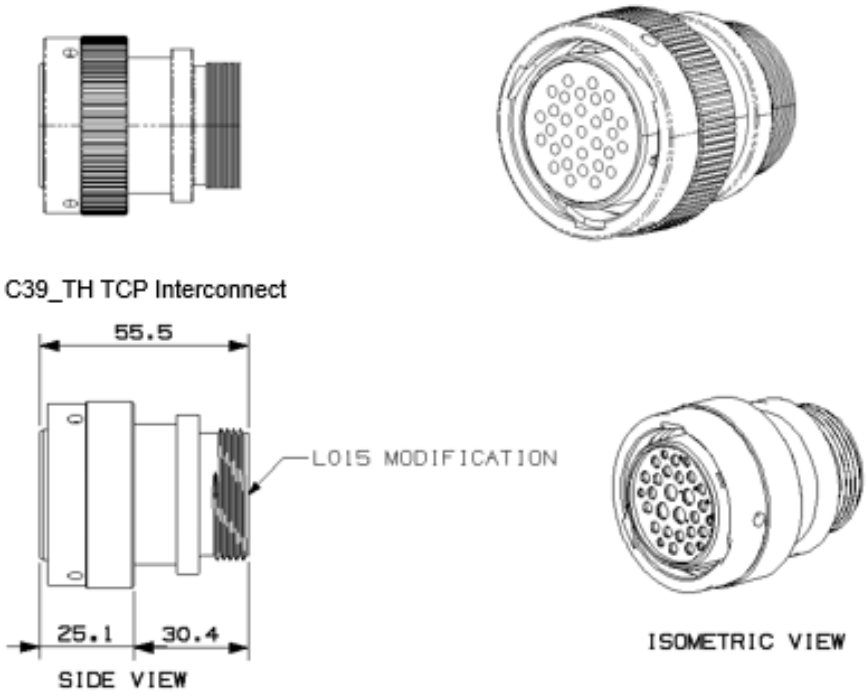
Internal Electrical Schematic:	Important: Use the multi-meter on the harness connector pins. DO NOT USE the meter on the ECU pins. 1. Check all the wire and connecter are fitted correctly. No wire should be backed out 2.Check male & female connector are mating properly.
Testing:	
Expected Values:	
Related Fault Codes:	

© 2025 Enter your company name

This page is intentionally left blank.
Remove this text from the manual
template if you want it completely blank.

Machine Fault Codes

5 Machine Fault Codes

5.1 DTC ERROR CODE

DTC Error Codes

Diagnostic Code (DC)	Fault Description
B1001 - 17 324	E-stop turntable button - Signal plausibility failure
B1005 - 24 325	Controls enable switch turntable enable function - Circuit short to high (10v)
B1006 - 16 326	Controls enable switch platform enable function - Circuit short to high (10v)
B1007 - 16 327	Controls enable switch both functions - Signal plausibility failure (10v)
B1008 - 16 328	Controls enable switch turntable enable function - Circuit short to low
B1009 - 16 329	Controls enable switch both functions - Signal plausibility failure (Circuit open)
B1010 - 13 330	Controls enable switch both functions - Signal plausibility failure (Circuit open)
B1011 - 17 332	Artic boom position switch 1 - Circuit short to high (12v)
B1012 - 17 333	Artic boom position switch 2 - Circuit short to high (12v)
B1013 - 16 335	Artic boom position switch 1 - Circuit short to low
B1014 - 13 336	Artic boom position switch - Signal plausibility failure (Circuit open)
B1015 - 16 337	Artic boom position switch 2 - Circuit short to low
B1016 - 92 338	Artic boom
B1018 - 16 340	Tilt Sensor short circuit to low
B1019 - 17 341	Slew position switch 1 - Circuit short to high (12v)
B1020 - 17 342	Slew position switch 2 - Circuit short to high (12v)
B1021 - 16 343	Slew position switch 1 - Circuit short to low
B1022 - 13 345	Slew position switch - Signal plausibility failure (Circuit open)
B1023 - 16 346	Slew position switch 2 - Circuit short to low
B1024 - 92 347	Slew position switch - Signal plausibility failure (12v)
B1025 - 13 348	Crush protection position switch - Signal plausibility failure
B1026 - 17 349	Crush protection position switch 1 - Circuit short to high (5v)
B1027 - 16 350	Crush protection position switch 1 - Circuit short to low
B1028 - 16 351	Crush protection position switch 2 - Circuit short to low
B1029 - 17 352	Crush protection position switch 2 - Circuit short to high (10v)
B1030 - 17 354	FORWARD OR REVERSE Proportional Solenoid Valve High Side Short Circuit to High
B1031 - 16 355	FORWARD OR REVERSE Proportional Solenoid Valve High Side Short Circuit to Low
B1032 - 13 356	FORWARD OR REVERSE Proportional Solenoid Valve High Side Open Circuit

© 2025 Enter your company name

B1033 - 17 357	FORWARD OR REVERSE Proportional Solenoid Valve Low Side Short Circuit to High
B1034 - 16 358	FORWARD OR REVERSE Proportional Solenoid Valve Low Side Short Circuit to Low
B1035 - 13 359	FORWARD OR REVERSE Proportional Solenoid Valve Low Side Open Circuit
B1036 - 17 360	Public proportional output solenoid short circuit to high (>10.5V)
B1037 - 16 361	Public proportional output solenoid short circuit to low.
B1038 - 13 362	PUBLIC Proportional Solenoid Valve High Side & Low Side Open Circuit
B1039 - 17 363	PLATFORM LEVELING DIRECTIONAL Solenoid Valve Raise High Side Short Circuit to High OR Open Circuit
B1040 - 16 364	PLATFORM LEVELING DIRECTIONAL Solenoid Valve Raise High Side Short Circuit to Low
B1041 - 17 365	PLATFORM LEVELING DIRECTIONAL Solenoid Valve Lower High Side Short Circuit to High OR Open Circuit
B1042 - 16 366	PLATFORM LEVELING DIRECTIONAL Solenoid Valve Lower High Side Short Circuit to Low
B1043 - 17 367	Oscillating axle solenoid high side - Circuit short to high (12v)
B1044 - 16 368	Oscillating axle solenoid high side - Circuit short to low
B1045 - 13 369	Oscillating axle solenoid high - Circuit open
B1046 - 17 370	HIGH TORQUE/LOW SPEED Solenoid Valve Short Circuit to High or Open Circuit
B1047 - 16 371	HIGH TORQUE/LOW SPEED Solenoid Valve Short Circuit to Low
B1048 - 17 372	Brakes solenoid front function - Circuit open or short to high (12v)
B1049 - 16 373	Brakes solenoid front function - Circuit short to low
B1050 - 17 375	Engine start / stop turntable button - Circuit short to high (10v)
B1051 - 16 376	Engine start / stop turntable button - Circuit short to low
B1052 - 24 377	Engine start / stop turntable button - Signal stuck high
B1053 - 17 378	Foot pedal - Circuit short to high (12v)
B1054 - 16 379	Foot pedal - Circuit short to low
B1055 - 17 380	AUX / Overload override button pressed condition - Circuit short to high (10v)
B1056 - 16 381	AUX / Overload override button pressed condition - Circuit short to low
B1058 - 17 382	Override switch pressed short circuit to high
B1059 - 16 383	Override switch pressed state - Circuit short to low
B1060 - 13 384	Override switch - Signal plausibility failure (Circuit open)
B1061 - 17 386	Override switch unpressed short circuit to high
B1062 - 16 387	Override switch unpressed state - Circuit short to low
B1063 - 92 388	Override switch - Signal plausibility failure (12v)
B1064 - 17 389	Slew acknowledgment button - Circuit short to high (10v)
B1065 - 16 390	Slew acknowledgment button - Circuit short to low
B1066 - 24 391	Slew acknowledgment button - Signal stuck high
B1067 - 17 392	Potentiometer - Circuit short to high (5.5v)
B1069 - 17 393	Drive joystick - Circuit short to high (5v)
B1070 - 16 394	Drive joystick - Circuit open or short to low

© 2025 Enter your company name

B1071 - 17 395	Platform level turntable switch raise function - Circuit short to high (10v)
B1072 - 17 397	Platform level turntable switch lower function - Circuit short to high (10v)
B1073 - 92 398	Platform level turntable switch both functions - Signal plausibility failure (10v)
B1074 - 16 399	Platform level turntable switch raise function - Circuit short to low
B1075 - 16 400	Platform level turntable switch lower function - Circuit short to low
B1076 - 17 401	Main boom solenoid high side both functions - Circuit short to high (12v)
B1077 - 16 402	Main boom solenoid high side both functions - Circuit short to low
B1078 - 13 403	Main boom solenoid high side both functions - Circuit open
B1079 - 17 404	Main boom solenoid both functions - Valve fault
B1080 - 17 405	Slew solenoid high side both functions - Circuit short to high (12v)
B1081 - 16 406	Slew solenoid high side both functions - Circuit short to low
B1082 - 13 407	Slew solenoid high side both functions - Circuit open
B1083 - 17 408	Slew solenoid both functions - Valve fault.
B1084 - 17 409	MAIN BOOM EXTEND OR RETRACT DIRECTIONAL Solenoid Valve High Side Short Circuit to High OR Short Circuit to Low
B1086 - 13 410	MAIN BOOM EXTEND OR RETRACT DIRECTIONAL Solenoid Valve High Side & Low Side Open Circuit
B1087 - 17 410	MAIN BOOM EXTEND OR RETRACT DIRECTIONAL Solenoid Valve Fault
B1088 - 17 411	Steer solenoid high side both functions - Circuit short to high (12v)
B1089 - 16 412	Steer solenoid high side both functions - Circuit short to low
B1090 - 13 413	Steer solenoid high side and low side both functions - Circuit open
B1091 - 17 414	Steer solenoid both functions - Valve fault
B1092 - 17 415	Artic boom solenoid high side both functions - Circuit short to high (12v)
B1093 - 16 416	Artic boom solenoid high side both functions - Circuit short to low
B1094 - 13 417	Artic boom solenoid high and low side both functions - Circuit open
B1095 - 92 418	Artic boom solenoid both functions - Valve fault
B1096 - 17 419	Artic boom turntable switch raise function - Circuit short to high (10v)
B1097 - 17 420	Artic boom turntable switch lower function - Circuit short to high (10v)
B1098 - 92 421	Artic boom turntable switch - Signal plausibility failure (10v)
B1099 - 16 422	Artic boom turntable switch raise function - Circuit short to low
B1100 - 16 423	Artic boom turntable switch lower function - Circuit short to low
B1101 - 17 424	MAIN BOOM EXTEND Switch Short Circuit to High
B1102 - 17 425	MAIN BOOM RETRACT Switch Short Circuit to High
B1103 - 92 426	MAIN BOOM EXTEND & RETRACT Switches both activated (5 - 10V)
B1104 - 16 427	MAIN BOOM EXTEND Switch Short Circuit to Low
B1105 - 16 428	MAIN BOOM RETRACT Switch Short Circuit to Low
B1106 - 17 430	Platform rotate turntable switch right function - Circuit short to high (10v)
B1107 - 17 431	Platform rotate turntable switch left function - Circuit short to high (10v)
B1108 - 92 432	Platform rotate turntable switch both functions - Signal plausibility failure (10v)
B1109 - 16 433	Platform rotate turntable switch right function - Circuit short to low
B1110 - 16 435	Platform rotate turntable switch left function - Circuit short to low
B1111 - 17 436	Jib boom turntable switch raise function - Circuit short to high (10v)

© 2025 Enter your company name

B1112 - 17	437	Jib boom turntable switch lower function - Circuit short to high (10v)
B1113 - 92	438	Jib boom turntable switch both functions - Signal plausibility failure (10v)
B1114 - 16	440	Jib boom turntable switch raise function - Circuit short to low
B1115 - 16	441	Jib boom turntable switch lower function - Circuit short to low
B1116 - 17	442	Main boom turntable switch raise function - Circuit short to high (10v)
B1117 - 17	443	Main boom turntable switch lower function - Circuit short to high (10v)
B1118 - 92	445	Main boom turntable switch both functions - Signal plausibility failure (10v)
B1119 - 16	446	Main boom turntable switch raise function - Circuit short to low
B1120 - 16	447	Main boom turntable switch lower function - Circuit short to low
B1121 - 17	449	Slew turntable switch right function - Circuit short to high (10v)
B1122 - 17	450	Slew turntable switch left function - Circuit short to high (10v)
B1123 - 92	451	Slew turntable switch both functions - Circuit short to high (10v)
B1124 - 16	453	Slew turntable switch right function - Circuit short to low
B1125 - 16	454	Slew turntable switch left function - Circuit short to low
B1126 - 17	455	Main boom position switch 1 - Circuit short to high (10v)
B1127 - 17	456	Main boom position switch 2 - Circuit short to high (10v)
B1128 - 16	457	Main boom position switch 1 - Circuit short to low
B1129 - 13	458	Main boom position switch - Signal plausibility failure (Circuit open)
B1130 - 16	459	Main boom position switch 2 - Circuit short to low
B1131 - 2F	461	Main boom position switch - Signal plausibility failure (10v)
B1133 - 17	462	JIB/PLATFORM FLOW High Side Solenoid Short Circuit to High
B1134 - 16	463	JIB/PLATFORM FLOW High Side Solenoid Short Circuit to Low
B1135 - 13	464	Beacon 2 - Circuit open or short to high (12v)
B1136 - 16	465	Beacon 2 - Circuit short to low
B1138 - 17	466	Main boom telescopic retract limit switch 1 short circuit to high
B1139 - 17	467	Main boom telescopic retract limit switch 2 short circuit to high
B1140 - 16	468	Main boom telescopic retract limit switch 1 short circuit to low
B1141 - 13	469	Main boom telescopic retract limit switch 1 and 2 are both open circuit
B1142 - 16	470	Main boom telescopic retract limit switch 2 short circuit to Low
B1143 - 92	471	Main boom telescopic retract limit switch 1 and 2 Short to 10V
B1144 - 17	472	10v Feed turntable system - Circuit short to high (>10v)
B1145 - 16	473	10v Feed turntable system - Circuit short to low
B1146 - 17	474	Steer joystick - Circuit short to high (5v)
B1147 - 16	475	Steer joystick - Circuit open or short to low
B1148 - 17	476	Main boom joystick - Circuit short to high (5v)
B1149 - 16	478	Main boom joystick - Circuit open or short to low
B1150 - 17	479	Slew joystick - Circuit short to high (5v)
B1151 - 16	480	Slew joystick - Circuit open or short to low
B1154 - 16	481	SLEW JOYSTICK Short Circuit to Low (<0.25V) or Open Circuit
B1167 - 13	482	Platform rotate solenoid left function - Circuit open or short to high (12v)
B1168 - 16	483	Platform rotate solenoid left function - Circuit short to low

© 2025 Enter your company name

B1169 - 13 484	Platform rotate solenoid right function - Circuit open or short to high (12v)
B1170 - 16 485	Platform rotate solenoid right function - Circuit short to low
B1171 - 13 486	Jib boom solenoid raise function - Circuit open or short to high (12v)
B1172 - 16 487	Jib boom solenoid raise function - Circuit short to low
B1173 - 13 488	Jib boom solenoid lower function - Circuit open or short to high (12v)
B1174 - 16 489	Jib boom solenoid lower function - Circuit open or short to low
B1175 - 13 490	MAIN BOOM LIFT/SLEW DIRECTIONAL Solenoid Valve Short Circuit to High or Open Circuit
B1176 - 16 491	MAIN BOOM LIFT/SLEW DIRECTIONAL Solenoid Valve Short Circuit to Low
B1177 - 16 492	Buzzer turntable - Circuit short to low
B1178 - 13 493	Buzzer turntable - Circuit open or short to high (12v)
B1179 - 13 494	Beacon 1 - Circuit open or short to high (12v)
B1180 - 16 495	Beacon 1 - Circuit short to low
B1181 - 16 496	Horn relay - Circuit short to low
B1182 - 13 497	Horn relay - Circuit open
B1183 - 19 498	White noise alarm - Circuit short to low
B1184 - 13 499	White noise alarm - Circuit open or short to high (12v)
B1186 - 16 500	HYDRAULIC GENERATOR LED Short Circuit to Low
B1187 - 13 501	HYDRAULIC GENERATOR LED Open Circuit
B1188 - 16 502	Caution LED short circuit to low
B1189 - 13 503	Caution LED open circuit
B1190 - 16 504	Fault LED - Circuit short to low
B1191 - 17 506	Fault LED - Circuit short to high (12v)
B1192 - 16 507	Tilt LED short circuit to low
B1193 - 13 508	Tilt LED open circuit
B1194 - 16 509	Overload LED short circuit to low
B1195 - 13 510	Overload LED open circuit
B1196 - 16 511	Low fuel LED short circuit to low
B1197 - 13 512	Low fuel LED open circuit
B1198 - 16 513	Slew acknowledgment LED - Circuit short to low
B1199 - 17 514	Slew acknowledgment LED - Circuit short to high (12v)
B1202 - 16 515	High torque LED output short circuit to low
B1203 - 13 516	High torque LED output open circuit
B1204 - 16 517	High Engine Speed LED output short circuit to low
B1205 - 13 518	High Engine Speed LED output open circuit
B1206 - 17 519	Horn turntable button - Circuit short to high (10v)
B1207 - 16 520	Horn turntable button - Circuit short to low
B1208 - 24 521	Horn turntable button - Signal stuck high
B1209 - 17 522	High engine speed platform button - Circuit short to high (10v)
B1210 - 16 523	High engine speed platform button - Circuit short to low
B1211 - 24 524	High engine speed platform button - Signal stuck high

© 2025 Enter your company name

B1212 - 17 525	High Torque - High Torque Button Short Circuit to High.
B1213 - 16 526	High Torque - High Torque Button Short Circuit to Low.
B1214 - 24 527	High Torque - High Torque Button Stuck >10s.
B1215 - 17 528	Hydraulic generator button - Circuit short to high (10v)
B1216 - 16 529	Hydraulic generator button - Circuit short to low
B1217 - 24 530	Hydraulic generator button - signal stuck high
B1221 - 17 531	Overload sensor 1 - Out of range (High)
B1222 - 16 533	Overload sensor 1 - Circuit open or out of range (Low)
B1223 - 17 534	Overload sensor 2 - Out of range (High)
B1224 - 16 535	Overload sensor 2 - Circuit open or out of range (Low)
B1225 - 2F 536	Overload sensor - Signal erratic
B1227 - 17 538	Oscillating axle lock pressure sensor - Circuit short to high (12v)
B1228 - 16 539	Oscillating axle lock pressure sensor - Circuit open or short to low
B1232 - 17 540	Fuel level - Signal above allowable range
B1233 - 16 541	Fuel level - Signal below allowable range
B1235 - 17 542	E-stop platform button - Signal plausibility failure
B1236 - 2F 543	Oscillating axle lock pressure sensor - Failure
B1238 - 2F 545	Oscillating axle lock pressure sensor - Output is less than 1v when it should be greater than 1v
B1239 - 17 546	Engine start / stop platform button - Circuit short to high (10v)
B1240 - 16 547	Engine start / stop platform button - Circuit short to low
B1241 - 24 548	Engine start / stop platform button - signal stuck high
B1242 - 17 549	Platform level platform switch raise function - Circuit short to high (10v)
B1243 - 17 550	Platform level platform switch lower function - Circuit short to high (10v)
B1244 - 92 551	Platform level platform switch both functions - Signal plausibility failure (10v)
B1245 - 16 552	Platform level platform switch raise function - Circuit short to low
B1246 - 16 553	Platform level platform switch lower function - Circuit short to low
B1247 - 17 554	Artic boom platform switch raise function - Circuit short to high (10v)
B1248 - 17 555	Artic boom platform switch lower function - Circuit short to high (10v)
B1249 - 92 556	Artic boom platform switch - Signal plausibility failure (10v)
B1250 - 16 557	Artic boom platform switch raise function - Circuit short to low
B1251 - 16 557	Artic boom platform switch lower function - Circuit short to low
B1252 - 17 558	MAIN BOOM TELESCOPE EXTEND Switch SC to High.
B1253 - 17 559	MAIN BOOM TELESCOPE RETRACT Switch SC to High.
B1254 - 92 560	MAIN BOOM TELESCOPE EXTEND & RETRACT Switches both activated (5 - 10V).
B1255 - 16 561	MAIN BOOM TELESCOPE EXTEND Switch SC to Low.
B1256 - 16 562	MAIN BOOM TELESCOPE RETRACT Switch SC to Low.
B1257 - 17 563	Platform rotate platform switch right function - Circuit short to high (10v)
B1258 - 17 564	Platform rotate platform switch left function - Circuit short to high (10v)
B1259 - 92 565	Platform rotate platform switch both functions - Signal plausibility failure (10v)
B1260 - 16 566	Platform rotate platform switch right function - Circuit short to low

© 2025 Enter your company name

B1261 - 16 568	Platform rotate platform switch left function - Circuit short to low
B1262 - 17 569	Jib boom platform switch raise function - Circuit short to high (10v)
B1263 - 17 570	Jib boom platform switch lower function - Circuit short to high (10v)
B1264 - 92 571	Jib boom platform switch both functions - Signal plausibility failure (10v)
B1265 - 16 572	Jib boom platform switch raise function - Circuit short to low
B1266 - 16 573	Jib boom platform switch lower function - Circuit short to low
B1267 - 17 574	10v Feed platform system - Circuit short to high (>10v)
B1268 - 16 575	10v Feed platform system - Circuit short to low
B1269 - 16 577	Buzzer platform - Circuit short to low
B1270 - 17 578	Buzzer platform - Circuit open or short to high (12v)
B1273 - 17 579	Horn platform button - Circuit short to high (10v)
B1274 - 16 580	Horn platform button - Circuit short to low
B1275 - 24 581	Horn platform button - Signal stuck high
B1276 - 24 582	Startlock failure - Turntable ECU Power supply less than 8.5v
B1277 - 24 583	Startlock failure - Platform ECU Power supply less than 8.5v
B1278 - 17 585	Brakes solenoid rear function - Circuit open or short to high (12v)
B1279 - 16 586	Brakes solenoid rear function - Circuit short to low
B1281 - 16 588	Startlock failure - VSS2 Low Voltage less than 9.5v
B1283 - 16 589	Startlock failure - VSS1 Low Voltage less then 4.5v
B1284 - 16 590	Startlock failure - VSS2 Low Voltage less than 9.5v
B1285 - 16 591	Startlock failure - VSS3 Low Voltage less than 4.5v
B1287 - 2F 592	Fuel level - Erratic signal
B1288 - 2F 593	OSCILLATING AXLE PRESSURE SENSOR SOFTWARE Failure
B1300 - 2F 594	ALTERNATOR FAULT - Plausibility fault between low oil pressure input & Alternator input (SCH) 0
B1301 - 2F 596	Oscillating axle lock pressure sensor - Failure
B1302 - 2F 597	CAN RC CONFIG - Signal plausibility failure
B1303 - 2F 598	CAN RC CONFIG - Signal plausibility failure
B1304 - 24 599	Startlock failure - Turntable ECU Internal 5v voltage supply (VSS_1) circuit short to low
B1305 - 24 600	Startlock failure - Turntable ECU Internal 10v voltage supply (VSS_2) circuit short to low
B1307 - 24 600	Startlock failure - Turntable ECU Internal hardware monitor 1 fault
B1308 - 24 601	Startlock failure - Turntable ECU Proportional outputs circuit short to high (12v)
B1309 - 24 602	Startlock failure - Turntable ECU Switch outputs circuit short to high (12v)
B1310 - 24 603	Startlock failure - Controls enable switch input enabled during startup
B1312 - 24 604	Startlock failure - Turntable ECU 10v input enabled during startup
B1314 - 24 605	Startlock failure - Platform ECU Internal 10v voltage supply (VSS_2) circuit short to low
B1316 - 24 606	Startlock failure - Platform ECU Internal hardware monitor 1 fault
B1317 - 24 607	Startlock failure - Platform ECU Proportional outputs circuit short to high
B1318 - 24 608	Startlock failure - Platform ECU Switch outputs circuit short to high

© 2025 Enter your company name

B1319 - 24	610	Startlock failure - Foot pedal input enabled during startup
B1320 - 24	611	Startlock failure - Platform ECU Internal hardware monitor 2 fault
B1321 - 24	612	Startlock failure - Platform ECU 10v input enabled during startup
B1329 - 13	614	Jib boom / Platform rotate flow solenoid - Circuit open or short to high (12v)
B1330 - 16	615	Jib boom / Platform rotate flow solenoid - Circuit short to low
B1331 - 13	616	FORWARD OR REVERSE Proportional Solenoid Valve Fault
B1332 - 17	618	PUBLIC Proportional Solenoid Valve Low Side Short Circuit to High
B1333 - 16	618	PUBLIC Proportional Solenoid Valve Low Side Short Circuit to Low
B1334 - 13	619	PUBLIC Proportional Solenoid Valve Fault
B1335 - 17	620	Main boom solenoid low side both functions - Circuit short to high (12v)
B1336 - 16	621	Main boom solenoid low side both functions - Circuit short to low
B1337 - 13	622	Main boom solenoid low side both functions - Circuit open
B1338 - 17	623	Slew solenoid low side both functions - Circuit short to high (12v)
B1339 - 16	625	Slew solenoid low side both functions - Circuit short to low
B1340 - 13	626	Slew solenoid low side both functions - Circuit open
B1341 - 17	627	MAIN BOOM EXTEND OR RETRACT DIRECTIONAL Solenoid Valve Low Side Short Circuit to High
B1342 - 16	628	MAIN BOOM EXTEND OR RETRACT DIRECTIONAL Solenoid Valve Low Side Short Circuit to Low
B1344 - 17	629	Steer solenoid low side both functions - Circuit short to high (12v)
B1345 - 16	630	Steer solenoid low side both functions - Circuit short to low
B1347 - 17	631	Oscillating axle solenoid low side - Circuit short to high (12v)
B1348 - 16	632	Oscillating axle solenoid low side - Circuit short to low
B1349 - 13	633	Oscillating axle solenoid - Valve fault
B1350 - 17	634	Artic boom solenoid low side both functions - Circuit short to high (12v)
B1351 - 16	635	Artic boom solenoid low side both functions - Circuit short to low
B1353 - 16	636	Engine ignition - Circuit short to low
B1354 - 13	637	Engine ignition - Circuit open or short to high (12v)
B1355 - 16	638	Hydraulic generator solenoid - Circuit short to low
B1356 - 13	639	Hydraulic generator solenoid high side - Circuit open or short to high (12v)
B1357 - 16	?	Engine crank signal - Circuit short to low
B1358 - 13	641	Engine crank signal - Circuit open or short to high (12v)
U0411 - 87	642	EGR no transmission/not received failure (for CAN)
U1293 - 87	643	CAN CAN TIME OUT ERROR
U1294 - 56	?	CAN CAN RC ERROR - Rolling counter for platform input signal1 message
U1295 - 41	?	CAN CAN CHECK SUM ERROR
U1296 - 87	647	CAN CAN TIME OUT ERROR
U1298 - 41	?	CAN CAN CHECK SUM ERROR
U1299 - 87	?	CAN Signal pairing failure
U1323 - 56	?	CAN CAN RC ERROR - Rolling counter for platform output signal1 message
U1324 - 56	?	CAN CAN RC ERROR
U1325 - 56	?	CAN CAN RC ERROR

© 2025 Enter your company name

U1326 - 41	CAN CAN CHECK SUM ERROR
U1327 - 41	CAN CAN CHECK SUM ERROR
U1328 - 41	CAN CAN CHECK SUM ERROR

5.1.1 B1001-17

Error code:	B1001-17
ECU	Base ECU
Description:	E-Stop & Base Override - E-Stop Plausibility Check
Component:	E-Stop(s)
Vehicle reaction:	Disable all outputs except CAN (Emergency stop pressed) Default to E-Stop pressed condition
Possible Cause:	1. A short circuit within the wiring harness 2. A poor connection or damaged terminal within the connector(s) 3. A damaged or broken wire within the wiring harness 4. Component is damaged
Service Action:	1. Check no short in wiring harness between E-STOP SWITCH +VE to GND or E-STOP -VE to GND on Base E-Stop terminals. 2. Check terminals for damage at E-stop terminals, -C50_TCP(terminals 24/31 and 25/31), -C50_TH(terminals 24/31 and 25/31) and on Base Bosch ECU Connector (-C27-XC1_TH, Pin 14/96 and -C27-XC2_TH, Pin 28/58). 3. Check Continuity of wire #4005-#3049 and #6006 between Bosch Base ECU and E-Stop terminals. 4. Check operation of E-Stop switch to ensure correct switching. Contacts should be normally closed during normal operation (Unpressed) and Open contacts when switch is pressed. Switch terminal attached to wire #3049 should be 12V (unpressed) and 0V (pressed). Switch terminal attached to wire #6006 should be 0V (GND) (Unpressed) and open circuit to GND when pressed. IF fault found, check operation of switch with multimeter, checking the closed and open conditions.

© 2025 Enter your company name



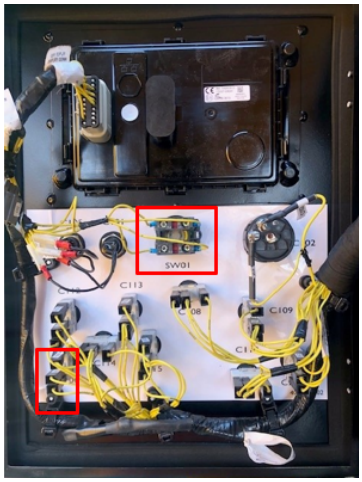

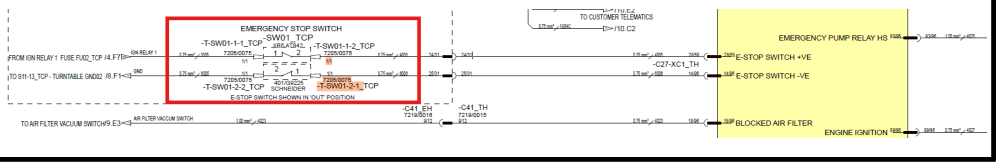

5.1.2 B1005-17

Error code:	B1005-17
ECU	Base ECU
Description:	E-Stop & Base Override - Base Enable Switch Short Circuit to High
Component:	Base Enable Switch
Vehicle reaction:	Before operation: Default to platform controls Allow base override After operation: Refer to 10V System Short Circuit Fault reaction
Possible Cause:	1. A short circuit within the wiring harness 2. A short circuit within the harness connectors 3. Water damage/ingress within the harness connectors 4. Damaged component
Service Action:	1. Check wiring between Override Switch and Base Bosch ECU. Check interconnect connector. Check wiring and diode between override switch and e-stop switch. 2. Disconnect connector to Bosch ECU, check continuity between override switch terminals -C200-3 & -C200-1. This should be 'Open Circuit'. Investigate if testing does not concur.

© 2025 Enter your company name

	3. Check connectors are dry and free of any debris. Check for damaged pins on the Bosch connectors. 4. Check operation of Override Switch.  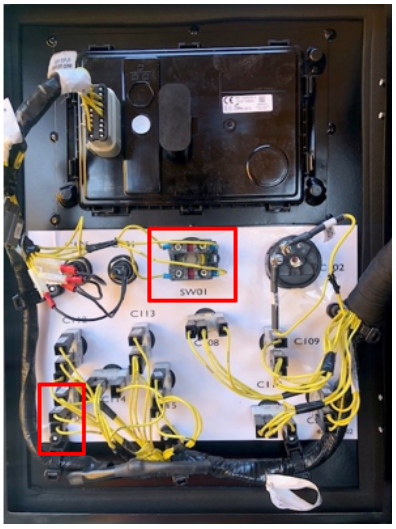 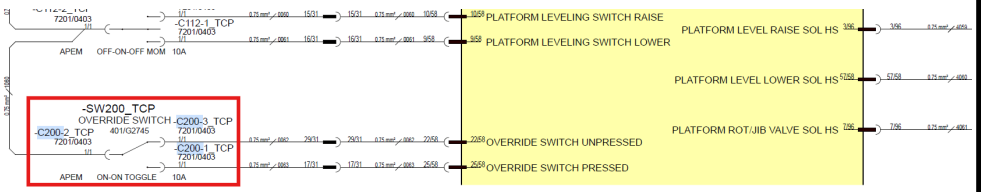

5.1.3 B1006-17

Error code:	B1006-17
ECU	Platform ECU
Description:	Platform AUX/Override - Platform AUX/Override Button Short Circuit to High
Component:	Platform AUX/Override Button
Vehicle reaction:	Before operation: Disable engine and default to platform controls Allow base override After operation: Refer to 10V System Short Circuit Fault reaction
Possible Cause:	1. A short circuit within the wiring harness 2. A short circuit within the harness connectors 3. Water damage/ingress within the harness connectors 4. Damaged component

© 2025 Enter your company name

Service Action:	1. Check wiring between Platform Override Switch and Platform Bosch ECU. 2. Disconnect connector to Bosch ECU, check continuity between override switch terminals -C209-1 & -C209-2. This should be 'Open Circuit'. Investigate if testing does not concur. 3. Check connectors are dry and free of any debris. Check for damaged pins on the Bosch connectors. 4. Check operation of Override Switch. 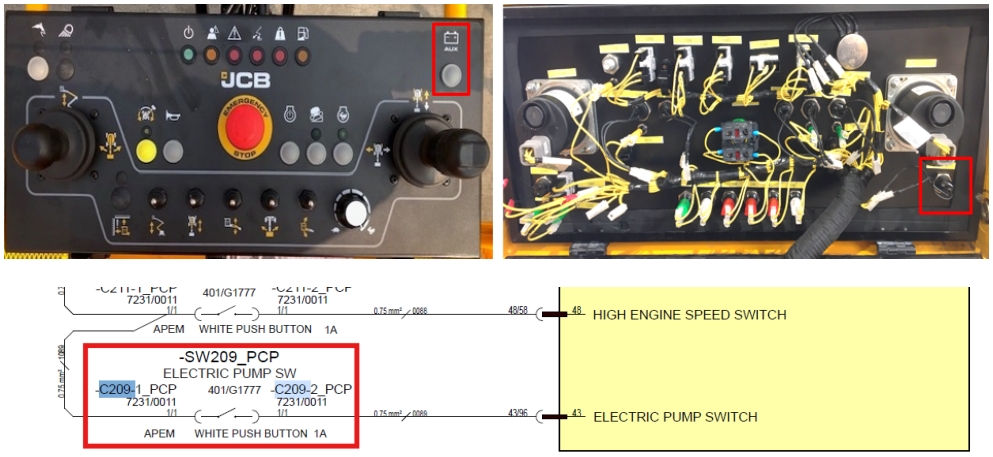

5.1.4 **B1007- 16**

Error code:	**B1007-16**
ECU	Base ECU
Description :	Platform Enable & Base Enable Selector both activated (5 - 10V)
Component :	Base Enable Switch
Vehicle reaction:	Disable engine and default to platform controls Allow base override
Possible Cause:	1. A short circuit within the wiring harness 2. A short circuit within the harness connectors 3. Water damage/ingress within the harness connectors 4. Damaged component
Service Action:	1. Check wiring between Platform Electric Pump Switch and Platform Bosch ECU. 2. Disconnect connector to Bosch ECU, check continuity between Electric Pump Switch terminals -C209-3 & -C209-1. This should be 'Open Circuit'.

© 2025 Enter your company name

	Investigate if testing does not concur. 3. Check connectors are dry and free of any debris. Check for damaged pins on the Bosch connectors. 4. Check operation of Electric Pump Switch. 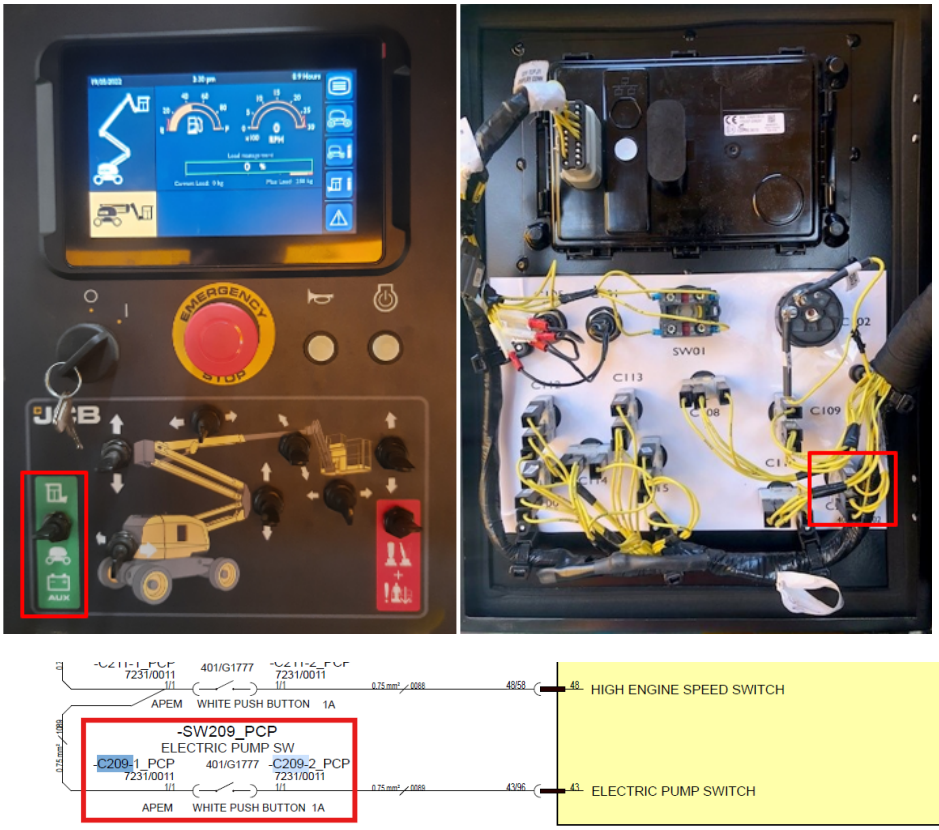

5.1.5 B1008-16

Error code:	B1008-16
ECU	Base ECU
Description:	E-Stop & Base Override - Base Enable Switch Short Circuit to Low
Component:	Base Enable Switch
Vehicle reaction:	Before operation: Disable engine and default to platform controls Allow base override After operation: Refer to 10V System Short Circuit Fault reaction

© 2025 Enter your company name

Possible Cause:	1. A short circuit within the wiring harness 2. A short circuit to the chassis 3. A short circuit within the harness connectors 4. Water damage/ingress within the harness connectors 5. Damaged component
Service Action:	1. Check wiring between Override Switch and Base Bosch ECU. Check interconnect connector. Check wiring and diode between override switch and e-stop switch. 2. Check the wiring has not been shorted to the chassis of the vehicle (caused perhaps by pinching or abrasion). 3. Disconnect connector to Bosch ECU, check continuity between override switch terminals -C200-3 & -C200-1. This should be 'Open Circuit'. Investigate if testing does not concur. 4. Check connectors are dry and free of any debris. Check for damaged pins on the Bosch connectors. 5. Check operation of Override Switch. Check for any physical damage to the switch, connectors or harness components.



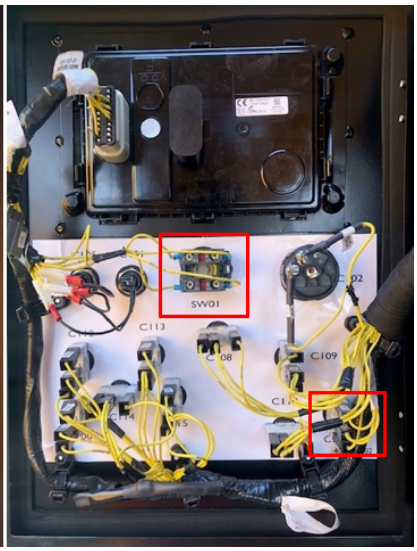

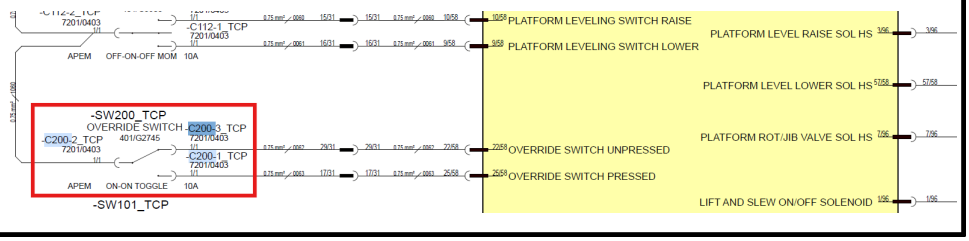

5.1.6 B1009-16

Error code:	**B1009-16**
ECU	Platform ECU

© 2025 Enter your company name

Description :	Platform AUX/Override - Platform AUX/Override Switch Short Circuit to Low
Component :	Platform AUX/Override Button
Vehicle reaction:	Before operation: Disable engine and default to platform controls Allow base override After operation: Refer to 10V System Short Circuit Fault reaction
Possible Cause:	1. A short circuit within the wiring harness 2. A short circuit to the chassis 3. A short circuit within the harness connectors 4. Water damage/ingress within the harness connectors 5. Damaged component
Service Action:	1. Check wiring between Platform Electric Pump Switch and Platform Bosch ECU. 2. Check the wiring has not been shorted to the chassis of the vehicle (caused perhaps by pinching or abrasion). 3. Disconnect connector to Bosch Platform ECU, check continuity between Electric Pump switch terminals -C209-3 & -C209-1. This should be 'Open Circuit'. Investigate if testing does not concur. 4. Check connectors are dry and free of any debris. Check for damaged pins on the Bosch connectors. 5. Check operation of Electric Pump Switch. Check for any physical damage to the switch, connectors or harness components.



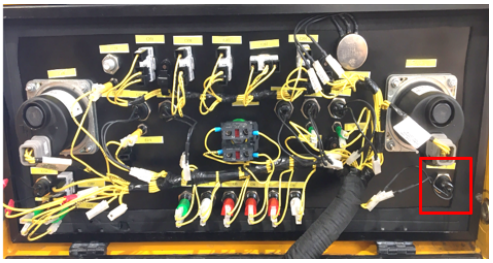

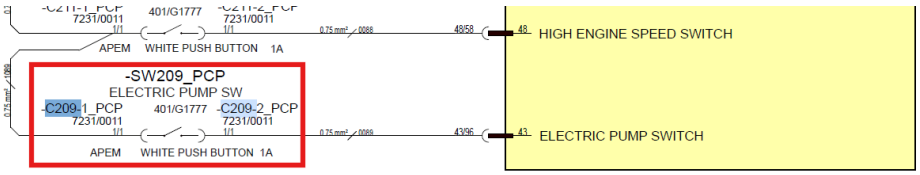

5.1.7 B1010-13

Error code:	**B1010-13**

© 2025 Enter your company name

ECU	Base ECU
Description:	Base Enable Switch Open Circuit AND Platform Enable Switch Open Circuit
Component:	Base Enable Switch
Vehicle reaction:	Disable engine and default to platform controls. Allow base override
Possible Cause:	1. A poor connection or damaged terminal within the connector(s) 2. A damaged or broken wire within the wiring harness 3. Component is damaged
Service Action:	1. At Base Control Panel, measure voltage at Base/Platform Enable Switch Terminal -C201-2_TCP (Measure between Terminal and Turntable Ground). If voltage is not present, Check interconnect -C50_TH (31-way HDP). Measure Voltage at pin 30/31 (Wire #1046). If voltage not present, Check continuity from -C50_TH Pin 30 to Bosch Base ECU Pin 32/58 (Wire #1046A) (Disengage Bosch ECU connector to perform this test). If no continuity - Check Continuity from Bosch Base ECU Pin 32/58 to -C50_TH pin 31/31 (Wire #1065). Note, this should be the same voltage and continuity as Pin 30/31. If Pin -C50_TH Pin 31 has continuity and voltage is present, Consider wire break of Wire #1046 between Splice -S07_TH and -C50 Pin 30/31. 2. Check Interconnects -C50_TH and -C50_TCP. Check for backed out pins or wire damage to pins. Check interconnects -C50_TCP Pins 18/31 and 19/31. Check Continuity from Base/Platform Enable Switch -C201-3 to Base Bosch ECU Pin 51/58 and also from -S201-1 to Base Bosch ECU Pin 36/96. 3. Confirm correct operation of Base/Platform Enable Switch -SW201_TCP. Check all wiring is intact.

© 2025 Enter your company name



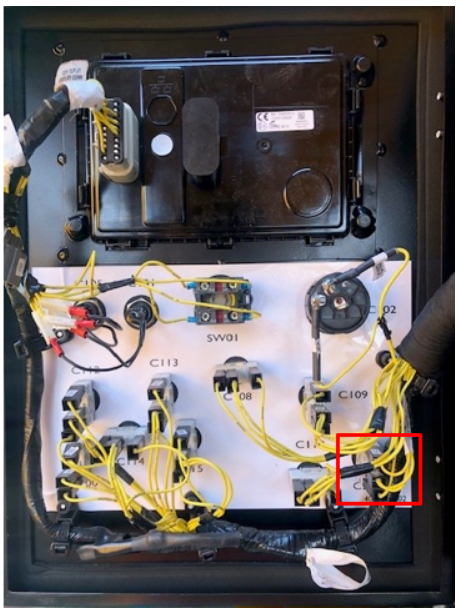

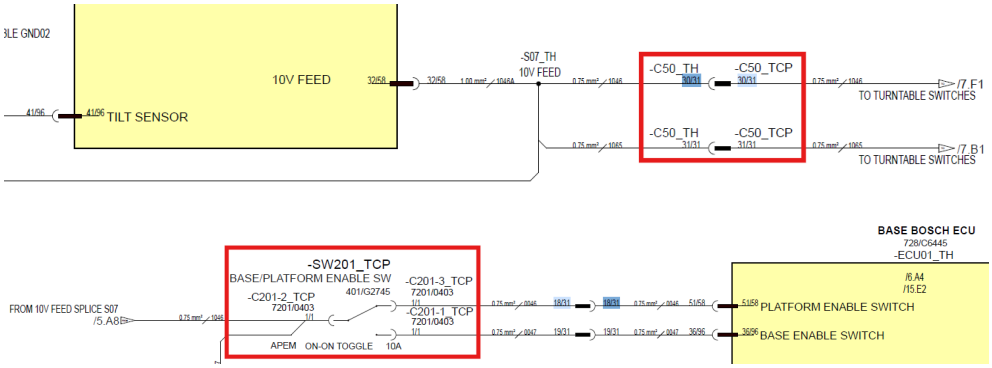

5.1.8 B1011-17

Error code:	B1011-17
ECU	Base ECU
Description:	Artic Boom Lower Limit Switch 1 Short Circuit to High
Component:	Artic Boom Lower Limit Switch
Vehicle reaction:	Default to raised position so machine is at slow speed, prevent main boom raise, articulated boom raise and telescopic extend functions
Possible Cause:	1. A short circuit within the wiring harness 2. A short circuit within the harness connectors

© 2025 Enter your company name

	3. Water damage/ingress within the harness connectors 4. Damaged component
Service Action:	1. Remove switch cover lid. 2. Check for water ingress/corrosion. 3. Check inputs on pin 13 and 21 for 10volt input. 4. Check Ground cable 1046C for and cut or damage. 5. Check Base ECU pin 37/96 and 24/58 for bent or loose connection. 6. Check wire from limit switch to Base ECU connector 4009 and 4011. 7. Check if valve is mechanically jammed 8. Check switch function with multi-meter. 9. Turn machine ignition on and off to clear code.   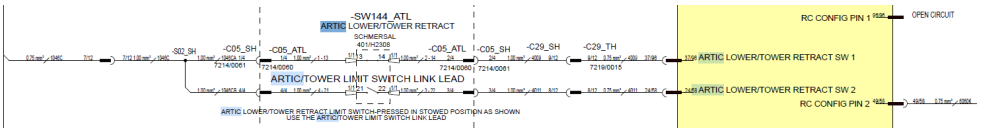

5.1.9 **B1012-17**

Error code:	**B1012-17**
ECU	Base ECU
Description:	Artic Boom Lower Limit Switch 2 Short Circuit to High

© 2025 Enter your company name

Component :	Artic Boom Lower Limit Switch
Vehicle reaction:	Default to raised position so machine is at slow speed, prevent main boom raise, articulated boom raise and telescopic extend functions
Possible Cause:	1. A short circuit within the wiring harness 2. A short circuit within the harness connectors 3. Water damage/ingress within the harness connectors 4. Damaged component
Service Action:	1. Remove switch cover lid. 2. Check for water ingress/corrosion. 3. Check inputs on pin 13 and 21 for 10volt input. 4. Check Ground cable 1046C for and cut or damage. 5. Check Base ECU pin 37/96 and 24/58 for bent or loose connection. 6. Check wire from limit switch to Base ECU connector 4009 and 4011. 7. Check if valve is mechanically jammed 8. Check switch function with multi-meter. 9. Turn machine ignition on and off to clear code.   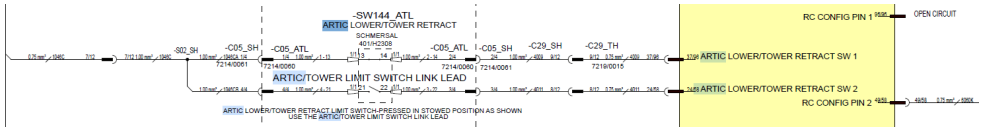

© 2025 Enter your company name

5.1.10 B1013-16

Error code:	B1013-16
ECU	Base ECU
Description:	Artic Boom Lower Limit Switch 1 Short Circuit to Low
Component:	Artic Boom Lower Limit Switch
Vehicle reaction:	Default to raised position so machine is at slow speed, prevent main boom raise, articulated boom raise and telescopic extend functions
Possible Cause:	1. A short circuit within the wiring harness 2. A short circuit within the harness connectors 3. Water damage/ingress within the harness connectors 4. Damaged component
Service Action:	1. Remove switch cover lid. 2. Check for water ingress/corrosion. 3. Check inputs on pin 13 and 21 for 10volt input. 4. Check Ground cable 1046C for and cut or damage. 5. Check Base ECU pin 37/96 and 24/58 for bent or loose connection. 6. Check wire from limit switch to Base ECU connector 4009 and 4011. 7. Check if valve is mechanically jammed 8. Check switch function with multi-meter. 9. Turn machine ignition on and off to clear code.

© 2025 Enter your company name





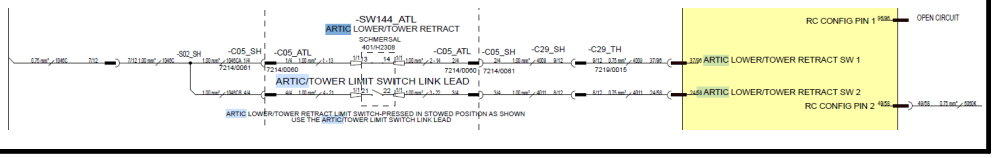

5.1.11 B1014-13

Error code:	B1014-13
ECU	Base ECU
Description:	Artic Boom Lower Limit Switch 1 AND Switch 2 Open Circuit
Component:	Limit Switch
Vehicle reaction:	Default to raised position so machine is at slow speed, prevent main boom raise, articulated boom raise and telescopic extend functions.
Possible Cause:	1. Poor connection 2. Break in wiring 3. Water in switch 4. Broken switch
Service Action:	1. Remove switch cover lid. 2. Check for water ingress/corrosion. 3. Check inputs on pin 13 and 21 for 10volt input. 4. Check Ground cable 1046C for and cut or damage.

© 2025 Enter your company name

	5. Check Base ECU pin 37/96 and 24/58 for bent or loose connection. 6. Check wire from limit switch to Base ECU connector 4009 and 4011. 7. Check if valve is mechanically jammed 8. Check switch function with multi-meter. 9. Turn machine ignition on and off to clear code.   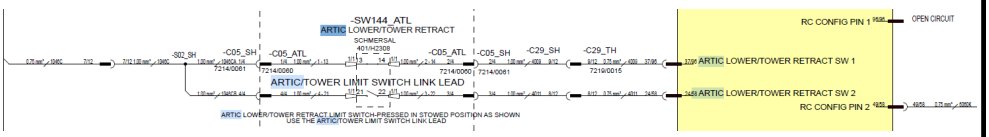

5.1.12 B1015-16

Error code:	**B1014-13**
ECU	Base ECU
Description :	Artic Boom Lower Limit Switch 2 Short Circuit to Low
Component :	Artic Boom Lower Limit Switch
Vehicle reaction:	Default to raised position so machine is at slow speed, prevent main boom raise, articulated boom raise and telescopic extend functions
Possible Cause:	1. A short circuit within the wiring harness 2. A short circuit within the harness connectors

© 2025 Enter your company name

	3. Water damage/ingress within the harness connectors 4. Damaged component
Service Action:	1. Remove switch cover lid. 2. Check for water ingress/corrosion. 3. Remove switch cover, Check if pin 22 as continuity to ground 4. Check inputs on pin 13 and 21 for 10volt input. 5. Check Ground cable 1046C for and cut or damage. 6. Check Base ECU pin 37/96 and 24/58 for bent or loose connection. 7. Check wire from limit switch to Base ECU connector 4009 and 4011. 8. Check if valve is mechanically jammed 9. Check switch function with multi-meter. 10. Turn machine ignition on and off to clear code.   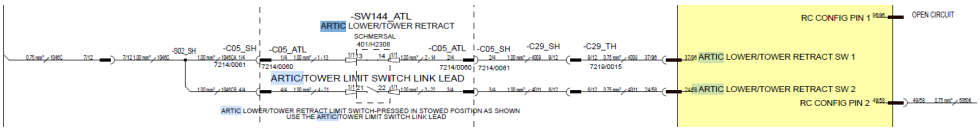

5.1.13 B1016-92

Error code:	**B1016-92**
ECU	Base ECU

© 2025 Enter your company name

Description :	Artic Boom Lower Limit Switch 1 AND Switch 2 short to 10V
Component :	Artic Boom Lower Limit Switch
Vehicle reaction:	default to raised position so machine is at slow speed, prevent main boom raise, articulated boom raise and telescopic extend functions.
Possible Cause:	1. Poor connection 2. Break in wiring 3. Water in switch 4. Broken switch
Service Action:	1. Remove switch cover lid. 2. Check for water ingress/corrosion. 3. Check inputs on pin 13 and 21 for 10volt input. 4. Check Ground cable 1046C for and cut or damage. 5. Check Base ECU pin 37/96 and 24/58 for bent or loose connection. 6. Check wire from limit switch to Base ECU connector 4009 and 4011. 7. Check if valve is mechanically jammed 8. Check switch function with multi-meter. 9. Turn machine ignition on and off to clear code.  

© 2025 Enter your company name

	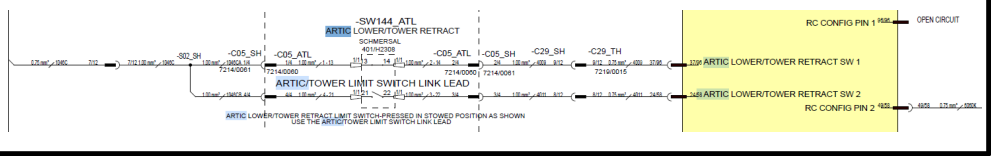

5.1.14 B1018-16

Error code:	B1018-16
ECU	Base ECU
Description:	Tilt Sensor short circuit to low
Component:	Tilt Sensor
Vehicle reaction:	Implement tilt alarm, when in raised position: prevent travel, prevent main boom and articulated boom raise and telescopic extend blocked
Possible Cause:	1. Tilt Sensor not connected correctly 2. A short circuit within the wiring harness 3. A short circuit within the harness connectors 4. Water damage/ingress within the harness connectors 5. Damaged or Faulty component
Service Action:	1. Check connections to tilt sensor 2. Check the voltage at Pin A (should read 12V) if no voltage need to investigate as per schemetic 2. Check wiring at tilt sensor connector 3. Recalibrate Til Sensor 4. Replace the tilt sensor if damage or Faulty

© 2025 Enter your company name



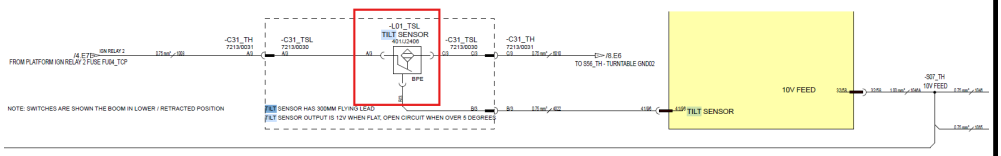

5.1.15 B1019-17

Error code:	B1019-17
ECU	Base ECU
Description:	SLEW POSITION Limit Switch 1 Short Circuit to High
Component:	Slew Limit Switch 1
Vehicle reaction:	Default to Slew position Implement slew acknowledge safety function (SF#10) in all positions Implement axle lock in all positions (axle is locked)
Possible Cause:	1. A short circuit within the wiring harness 2. A short circuit within the harness connectors 3. Water damage/ingress within the harness connectors 4. Damaged component
Service Action:	1. Measure voltage of Slew Position Switch -SW148_SPL Pin 14. Actuate the switch to check that the voltage level changes between 10V and 0V. If this does not happen, check operation of switch. Check Interconnect -C30_SPL / -C30_TH. Check pins at Base Bosch ECU connector. Observe harness, Check for any pinching / damage.

© 2025 Enter your company name

	2. Disconnect terminal from Pin 14, measure voltage of wire. If voltage is high 10V (or Higher) then there is a short circuit to high within the harness. 3. Check for water ingress at the switch terminals, The interconnects and at the Base Bosch ECU connectors. 4. Check the Switch, Interconnects, Base Bosch ECU and harnessing connectors for any damage. Pay particular attention to ECU pins as these could be bent.  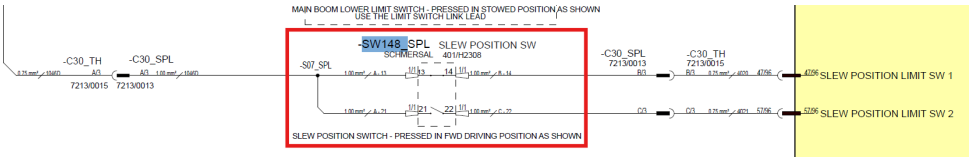

5.1.16 B1020-17

Error code:	B1020-17
ECU	Base ECU
Description:	SLEW POSITION Limit Switch 2 Short Circuit to High
Component:	Slew Limit Switch 2
Vehicle reaction:	Default to Slew position Implement slew acknowledge safety function (SF#10) in all positions Implement axle lock in all positions (axle is locked)

© 2025 Enter your company name

Possible Cause:	1. A short circuit within the wiring harness 2. A short circuit within the harness connectors 3. Water damage/ingress within the harness connectors 4. Damaged component
Service Action:	1. Measure voltage of Slew Position Switch -SW148_SPL Pin 22. Actuate the switch to check that the voltage level changes between 10V and 0V. If this does not happen, check operation of switch. Check Interconnect -C30_SPL / -C30_TH. Check pins at Base Bosch ECU connector. Observe harness, Check for any pinching / damage. 2. Disconnect terminal from Pin 22, measure voltage of wire. If voltage is high 10V (or Higher) then there is a short circuit to high within the harness. 3. Check for water ingress at the switch terminals, The interconnects and at the Base Bosch ECU connectors. 4. Check the Switch, Interconnects, Base Bosch ECU and harnessing connectors for any damage. Pay particular attention to ECU pins as these could be bent.  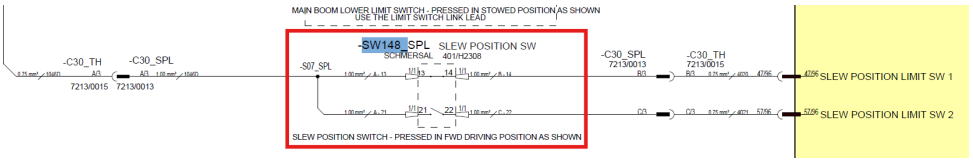

5.1.17 **B1021-16**

Error code:	**B1021-16**
ECU	Base ECU

© 2025 Enter your company name

Description:	SLEW POSITION Limit Switch 1 Short Circuit to Low
Component:	Slew Limit Switch 1
Vehicle reaction:	Default to Slew position Implement slew acknowledge safety function (SF#10) in all positions Implement axle lock in all positions (axle is locked)
Possible Cause:	1. A short circuit within the wiring harness 2. A short circuit to the chassis 3. A short circuit within the harness connectors 4. Water damage/ingress within the harness connectors 5. Damaged component
Service Action:	1. Measure voltage of Slew Position Switch -SW148_SPL Pin 14. Actuate the switch to check that the voltage level changes between 0V and 10V. If this does not happen, check operation of switch. Check Interconnect -C30_SPL / -C30_TH. Check pins at Base Bosch ECU connector. Observe harness, Check for any pinching / damage. 2. Disconnect terminal from Pin 14, measure voltage of switch output at this pin. If voltage remains at 0V when switch is actuated then there is a short circuit to ground within the switch or the input to the switch. 3. Check for water ingress at the switch terminals, The interconnects and at the Base Bosch ECU connectors. 4. Check the Switch, Interconnects, Base Bosch ECU and harnessing connectors for any damage. Pay particular attention to ECU pins as these could be bent. 

© 2025 Enter your company name

	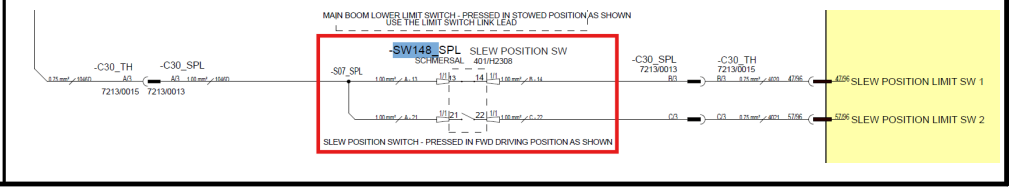

5.1.18 B1022-13

Error code:	B1022-13
ECU	Base ECU
Description:	SLEW POSITION Limit Switch 1 and SLEW POSITION Limit Switch 2 Open Circuit
Component:	Slew Limit Switch(es)
Vehicle reaction:	1. Default to Slew position 2. Implement slew acknowledge safety function (SF#10) in all positions 3. Implement axle lock in all positions (axle is locked)
Possible Cause:	1. A poor connection or damaged terminal within the connector(s) 2. A damaged or broken wire within the wiring harness 3. Component is damaged
Service Action:	1. Check Terminals at Slew Position Switch -SW148_SPL. Check Terminals at interconnects -C30_SPL / -C30_TH. Check terminals at Base Bosch ECU Connectors. Ensure all connectors are fully seated. 2. Check continuity with resistance meter between -C30_TH to Slew Position Switch -SW148_SPL terminals. Check from -C30_TH Pins B and C to Base Bosch ECU Connector Pins 47/96 and 57/96 respectively. 3. Check Operation of Slew Position Switch. Observe all parts for damage. Check terminals no9t backed out in Base Bosch ECU Connector. Check Terminals within -C30_TH and -C30_SPL,

© 2025 Enter your company name



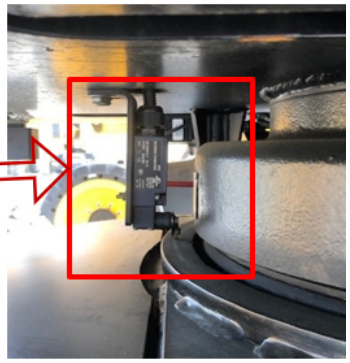

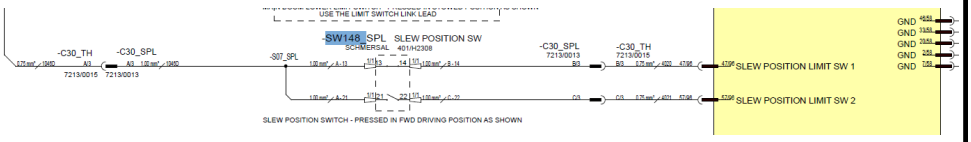

5.1.19 B1023-16

Error code:	B1023-16
ECU	Base ECU
Description:	SLEW POSITION Limit Switch 2 Short Circuit to Low
Component:	Slew Limit Switch 2
Vehicle reaction:	Default to Slew position Implement slew acknowledge safety function (SF#10) in all positions Implement axle lock in all positions (axle is locked)
Possible Cause:	1. A short circuit within the wiring harness 2. A short circuit to the chassis 3. A short circuit within the harness connectors 4. Water damage/ingress within the harness connectors 5. Damaged component
Service Action:	1. Measure voltage of Slew Position Switch -SW148_SPL Pin 22. Actuate the switch to check that the voltage level changes between 0V and 10V. If this does not happen, check operation of switch. Check Interconnect -C30_SPL / -C30_TH. Check pins at Base Bosch ECU connector. Observe harness, Check for any pinching / damage. 2. Disconnect terminal from Pin 22, measure voltage of switch output at this

© 2025 Enter your company name

	pin. If voltage remains at 0V when switch is actuated then there is a short circuit to ground within the switch or the input to the switch. 3. Check for water ingress at the switch terminals, The interconnects and at the Base Bosch ECU connectors. 4. Check the Switch, Interconnects, Base Bosch ECU and harnessing connectors for any damage. Pay particular attention to ECU pins as these could be bent. 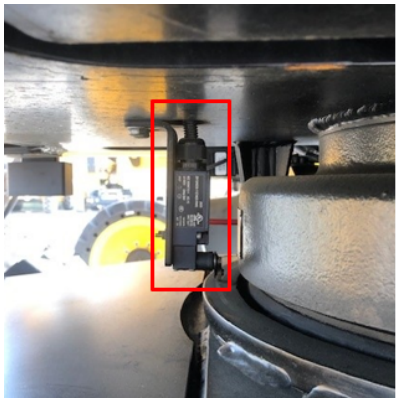  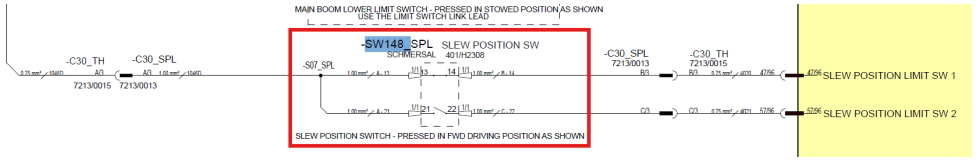

5.1.20 B1024-92

Error code:	B1024-92
ECU	Base ECU
Description:	SLEW POSITION Limit Switch 1 and SLEW POSITION Limit Switch 2 Short Circuit to 10V or 12V
Component:	Slew Limit Switch(es)
Vehicle reaction:	Default to Slew position Implement slew acknowledge safety function (SF#10) in all positions Implement axle lock in all positions (axle is locked)
Possible Cause:	1. A short circuit within the wiring harness 2. A short circuit within the harness connectors 3. Water damage/ingress within the harness connectors 4. Damaged component

© 2025 Enter your company name

Service Action:	1. Disconnect interconnect connectors from each other (-C30_SPL and -C30_TH). Measure continuity on -C30_SPL Terminal B and C. This should be 'Open Circuit'. Actuate the switch, The measurement should remain 'Open Circuit'. If the measurements do not concur with this, then check wiring terminals at Slew Position Switch -SW148_SPL and check wiring from Switch to connector. 2. With Interconnects disconnected from each other, Check wires 4020 and 4021 are not shorted together. 3. Check Bosch Base ECU Connectors for Damage, Bent pins and water ingress. 4. Check Switch or harness for damage.   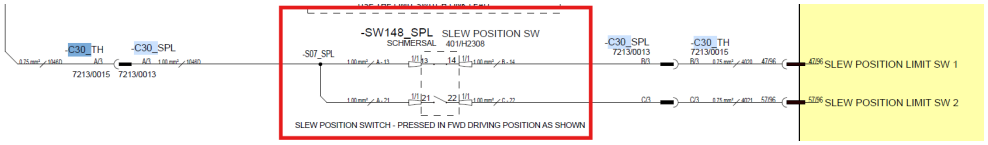

5.1.21 B1025-13

Error code:	**B1025-13**
ECU	Platform ECU
Description:	Crush Protection - Plausibility Check
Component:	Crush Protection Switch(es)
Vehicle reaction:	Detect failure mode and activate Crush protection functionality; Also includes Short Circuit to Low
Possible Cause:	1. A short or open circuit within the wiring harness 2. A short to the Chassis or other signal

© 2025 Enter your company name

	3. Water damage to the component, connectors or harness 4. Damaged component
Service Action:	1. Check voltages at Crush Protection Switch. Pin 21 and 22 should measure 10V. Pin 11 and 12 should measure 5V. 2. Disconnect Crush Protection Connector -C01_CPL from -C10_PH. Check resistance between Pin 22 and Pin 12. Value should be open Circuit.Check operation of switch by actuating the device. Check continuity from Crush Protection switch to Platform Bosch ECU connector, Terminals 47/58 and 36/58. 3. Check for water damage at Crush Protection Connector, Interconnects -C22_PH / -C22_PHP and Platform Bosch ECU connectors 4. Visually inspect wiring harness, Switch and all connectors for any damage or for mis-seated components. Check connectors for bent or backed out terminals.  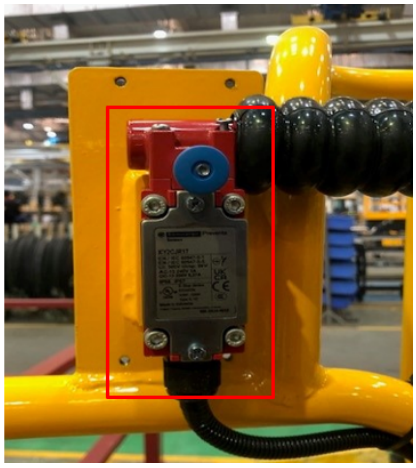 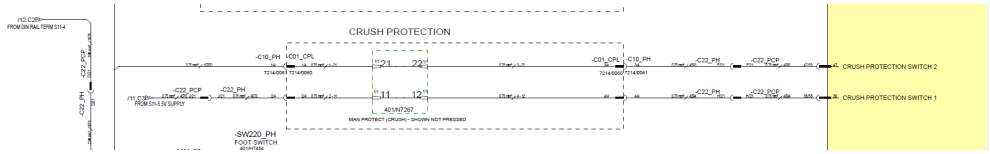

5.1.22 B1026-17

Error code:	**B1026-17**
ECU	Platform ECU
Description:	Crush Protection - Switch 1 Short Circuit to >5v
Component:	Crush Protection Switch 1

© 2025 Enter your company name

Vehicle reaction:	Detect failure mode and activate Crush protection functionality
Possible Cause:	1. A short circuit within the wiring harness 2. A short circuit within the harness connectors 3. Water damage/ingress within the harness connectors 4. Damaged component
Service Action:	1. Check voltages at Crush Protection Switch. Pin 21 and 22 should measure 10V. Pin 11 and 12 should measure 5V. 2. Disconnect Crush Protection Connector -C01_CPL from -C10_PH. Check resistance between Pin 22 and Pin 12. Value should be open Circuit.Check operation of switch by actuating the device. Check continuity from Crush Protection switch to Platform Bosch ECU connector, Terminals 47/58 and 36/58. 3. Check for water damage at Crush Protection Connector, Interconnects -C22_PH / -C22_PHP and platform Bosch ECU connectors 4. Visually inspect wiring harness, Switch and all connectors for any damage or for mis-seated components. Check connectors for bent or backed out terminals. 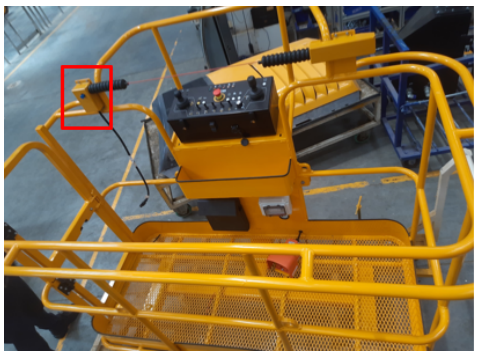   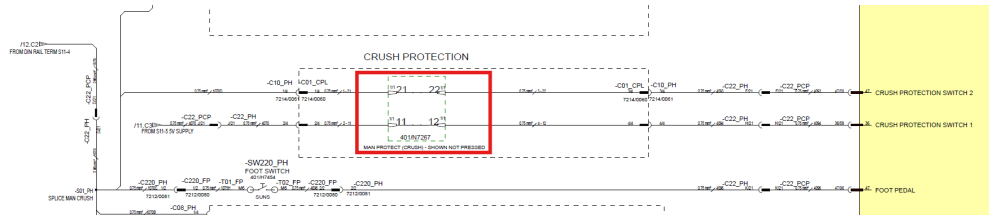

5.1.23 **B1027-16**

Error code:	**B1027-17**
ECU	Platform ECU
Description :	Crush Protection - Switch 1 Short Circuit to Low

© 2025 Enter your company name

Component:	Crush Protection Switch 1
Vehicle reaction:	Detect failure mode and activate Crush protection functionality
Possible Cause:	1. A short circuit within the wiring harness 2. A short circuit within the harness connectors 3. Water damage/ingress within the harness connectors 4. Damaged component
Service Action:	1. Check voltages at Crush Protection Switch. Pin 21 and 22 should measure 10V. Pin 11 and 12 should measure 5V. 2. Disconnect Crush Protection Connector -C01_CPL from -C10_PH. Check resistance between Pin 22 and Pin 12. Value should be open Circuit.Check operation of switch by actuating the device. Check continuity from Crush Protection switch to Platform Bosch ECU connector, Terminals 47/58 and 36/58. 3. Check for water damage at Crush Protection Connector, Interconnects -C22_PH / -C22_PHP and platform Bosch ECU connectors 4. Visually inspect wiring harness, Switch and all connectors for any damage or for mis-seated components. Check connectors for bent or backed out terminals. 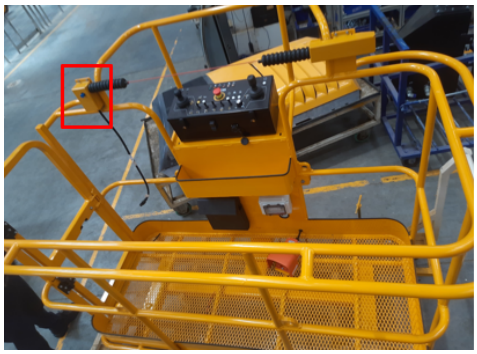   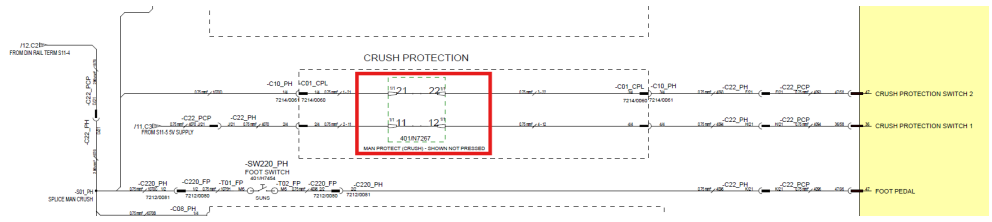

5.1.24 **B1028-16**

Error code:	**B1028-17**
ECU	Platform ECU

© 2025 Enter your company name

Description:	Crush Protection - Switch 2 Short Circuit to Low
Component:	Crush Protection Switch 2
Vehicle reaction:	Detect failure mode and activate Crush protection functionality
Possible Cause:	1. A short circuit within the wiring harness 2. A short circuit within the harness connectors 3. Water damage/ingress within the harness connectors 4. Damaged component
Service Action:	1. Check voltages at Crush Protection Switch. Pin 21 and 22 should measure 10V. Pin 11 and 12 should measure 5V. 2. Disconnect Crush Protection Connector -C01_CPL from -C10_PH. Check resistance between Pin 22 and Pin 12. Value should be open Circuit.Check operation of switch by actuating the device. Check continuity from Crush Protection switch to Platform Bosch ECU connector, Terminals 47/58 and 36/58. 3. Check for water damage at Crush Protection Connector, Interconnects -C22_PH / -C22_PHP and Platform Bosch ECU connectors 4. Visually inspect wiring harness, Switch and all connectors for any damage or for mis-seated components. Check connectors for bent or backed out terminals. 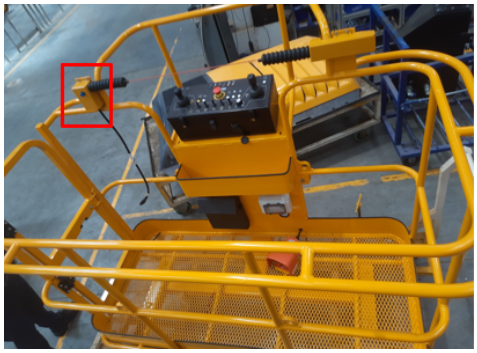   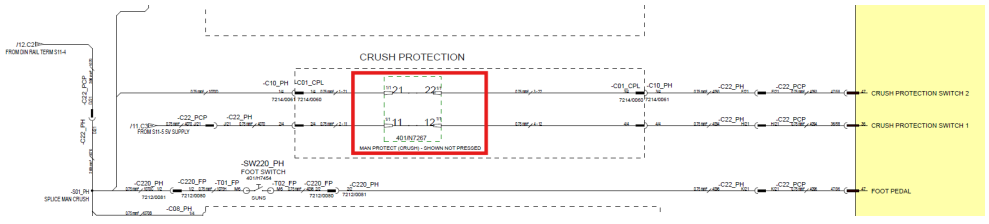

5.1.25 **B1029-17**

Error code:	**B1029-17**

© 2025 Enter your company name

ECU	Platform ECU
Description:	Crush Protection - Switch 2 Short Circuit to >10.5v
Component:	Crush Protection Switch 2
Vehicle reaction:	Detect failure mode and activate Crush protection functionality
Possible Cause:	1. A short circuit within the wiring harness 2. A short circuit within the harness connectors 3. Water damage/ingress within the harness connectors 4. Damaged component
Service Action:	1. Check voltages at Crush Protection Switch. Pin 21 and 22 should measure 10V. Pin 11 and 12 should measure 5V. 2. Disconnect Crush Protection Connector -C01_CPL from -C10_PH. Check resistance between Pin 22 and Pin 12. Value should be open Circuit.Check operation of switch by actuating the device. Check continuity from Crush Protection switch to Platform Bosch ECU connector, Terminals 47/58 and 36/58. 3. Check for water damage at Crush Protection Connector, Interconnects -C22_PH / -C22_PHP and Platform Bosch ECU connectors 4. Visually inspect wiring harness, Switch and all connectors for any damage or for mis-seated components. Check connectors for bent or backed out terminals. 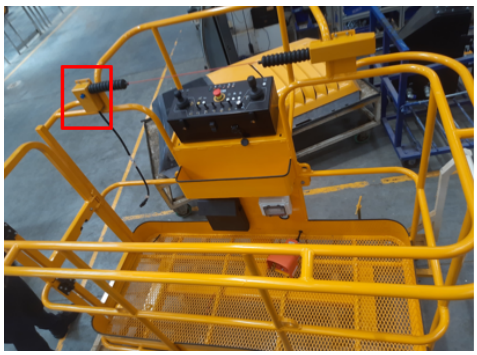   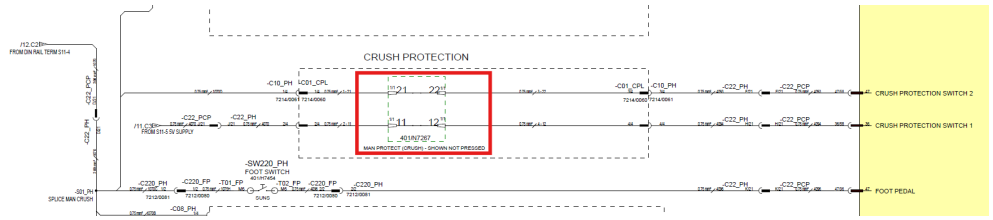

© 2025 Enter your company name

5.1.26 B1030-17

Error code:	B1030-17
ECU	Base ECU
Description :	FORWARD OR REVERSE Proportional Solenoid Valve High Side Short Circuit to High
Component :	Drive Solenoid
Vehicle reaction:	Detect failure mode with Safout method - Switch drive output (but not steer) to off (Brake comes ON automatically) Before Ignition ON, POST Fail (stuck in startup logic) and Generic output fault.
Possible Cause:	1. A short circuit within the wiring harness 2. A short circuit within the harness connectors 3. Water damage/ingress within the harness connectors 4. Damaged component
Service Action:	1. Check harness from Base Bosch ECU through to Transmission Pump connectors -C18_TH and -C19_TH. Disconnect connectors and test for short circuits with multi-meter. 2. Check condition of connectors at Base Bosch ECU and Transmission pump connectors 3. Check for water ingress at connectors including within ECU mounted connector and Solenoid mounted connectors. 4. Check harness for any visible damage such as abrasions and pinching. 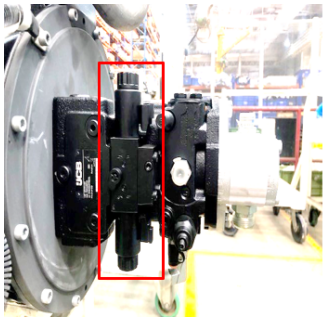 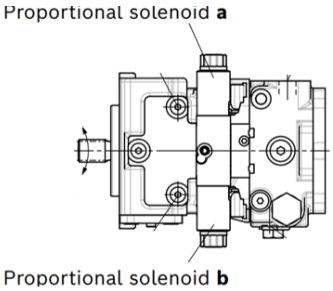 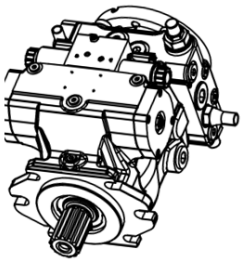

© 2025 Enter your company name

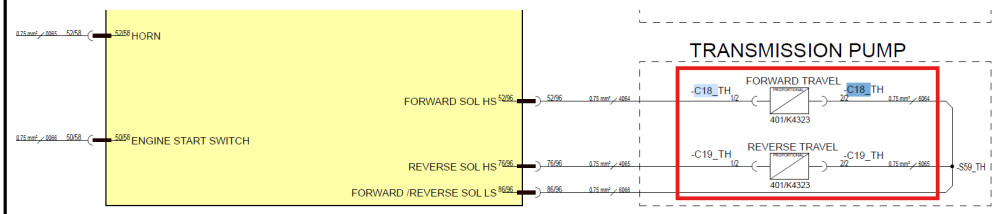

5.1.27 B1031-16

Error code:	B1031-16
ECU	Base ECU
Description:	FORWARD OR REVERSE Proportional Solenoid Valve High Side Short Circuit to Low
Component:	Drive Solenoid
Vehicle reaction:	Detect failure mode with Safout method - Switch drive output (but not steer) to off (Brake comes ON automatically)
Possible Cause:	1. A short circuit within the wiring harness 2. A short circuit to the chassis 3. A short circuit within the harness connectors 4. Water damage/ingress within the harness connectors 5. Damaged component
Service Action:	1. Check harness from Base Bosch ECU through to Transmission Pump connectors -C18_TH and -C19_TH. 2. Disconnect connectors and test for short circuits to GND with multi-meter. 3. Check condition of connectors at Base Bosch ECU and Transmission pump connectors 4. Check for water ingress at connectors including within ECU mounted connector and Solenoid mounted connectors. 5. Check harness for any visible damage such as abrasions and pinching.

© 2025 Enter your company name

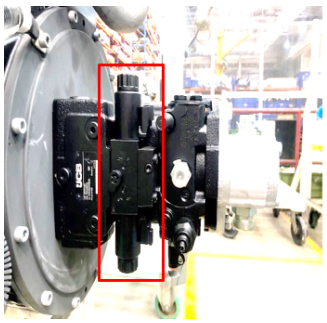

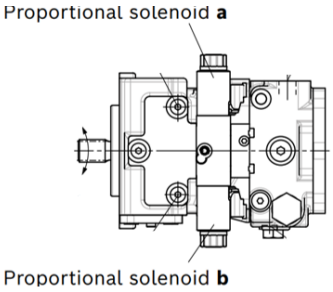

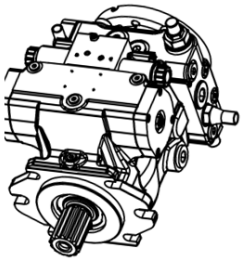

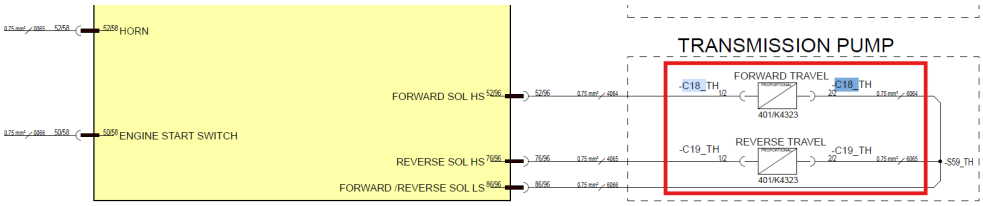

5.1.28 B1032-13

Error code:	B1032-13
ECU	Base ECU
Description :	FORWARD OR REVERSE Proportional Solenoid Valve High Side Open Circuit
Component :	Drive Solenoid
Vehicle reaction:	Detect failure mode with Safout method - Switch drive output (but not steer) to off (Brake comes ON automatically) Note:During operation , refer to FORWARD OR REVERSE Proportional Solenoid Valve Low Side Open Circuit Fault code
Possible Cause:	1. A poor connection or damaged terminal within the connector(s) 2. A damaged or broken wire within the wiring harness 3. Component is damaged
Service Action:	1. Check harness from Base Bosch ECU through to Transmission Pump connectors -C18_TH and -C19_TH. 2. Ensure connectors are fully seated. Check all terminals are present and not backed out inside connectors. Ensure wire is correctly terminated at terminals. Perform continuity tests on the harness. 3. check no damage to Base Bosch ECU connectors, Pump connectors or and visible damage to harness including abrasion and pinching

© 2025 Enter your company name

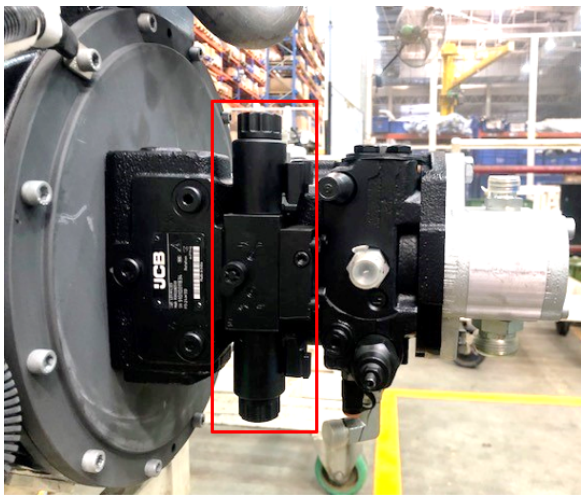

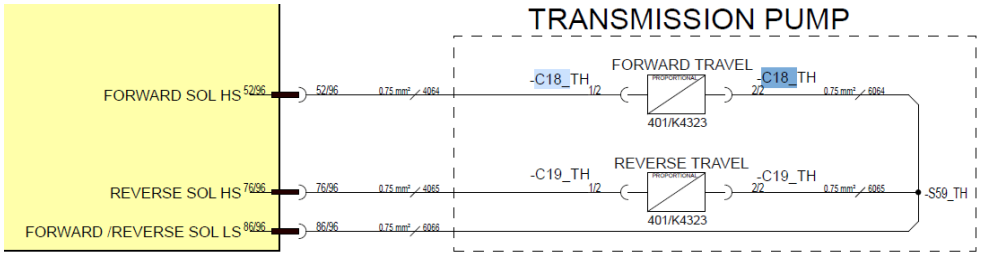

5.1.29 **B1033-17**

Error code:	**B1033-17**
ECU	Base ECU
Description :	FORWARD OR REVERSE Proportional Solenoid Valve Low Side Short Circuit to High
Component :	Drive Solenoid
Vehicle reaction:	Detect failure mode with Safout method - Switch drive output (but not steer) to off (Brake comes ON automatically) Before Ignition ON, POST Fail (stuck in startup logic) and Generic output fault.
Possible Cause:	1. A short circuit within the wiring harness 2. A short circuit within the harness connectors 3. Water damage/ingress within the harness connectors 4. Damaged component

© 2025 Enter your company name

Service Action:	1. Check harness from Base Bosch ECU through to Transmission Pump connectors -C18_TH and -C19_TH. Disconnect connectors and test for short circuits with multi-meter. 2. Check condition of connectors at Base Bosch ECU and TRansmission pump connectors 3. Check for water ingress at connectors including within ECU mounted connector and Solenoid mounted connectors. 4. Check harness for any visible damage such as abrasions and pinching.

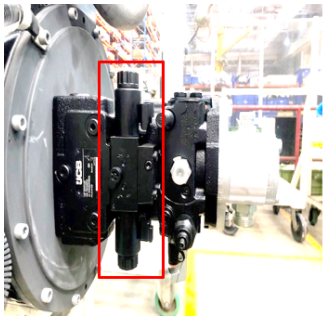

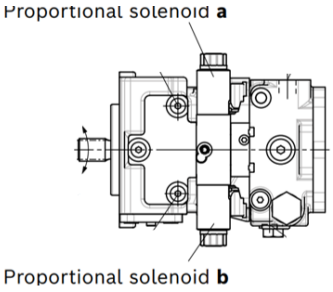

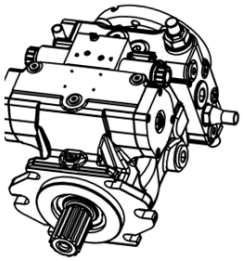

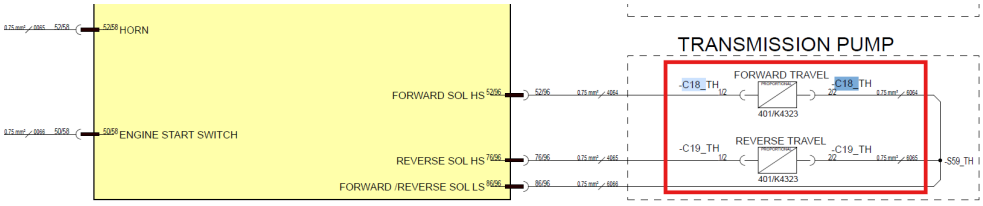

5.1.30 B1034-16

Error code:	**B1034-16**
ECU	Base ECU
Description:	FORWARD OR REVERSE Proportional Solenoid Valve Low Side Short Circuit to Low
Component:	Drive Solenoid
Vehicle reaction:	Detect failure mode with Safout method - Switch drive output (but not steer) to off (Brake comes ON automatically)
Possible Cause:	1. A short circuit within the wiring harness 2. A short circuit to the chassis 3. A short circuit within the harness connectors 4. Water damage/ingress within the harness connectors 5. Damaged component

© 2025 Enter your company name

Service Action:	1. Check harness from Base Bosch ECU through to Transmission Pump connectors -C18_TH and -C19_TH. Disconnect connectors and test for short circuits with multi-meter. 2. Check condition of connectors at Base Bosch ECU and Transmission pump connectors 3. Check for water ingress at connectors including within ECU mounted connector and Solenoid mounted connectors. 4. Check harness for any visible damage such as abrasions and pinching. 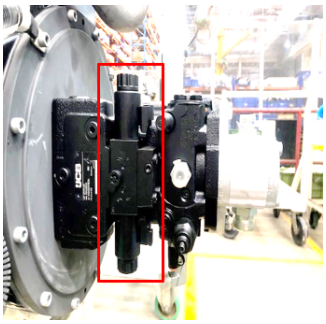 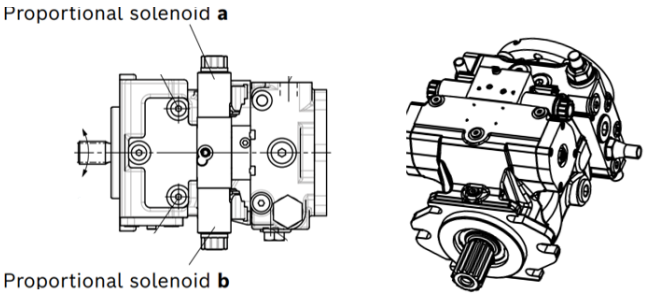 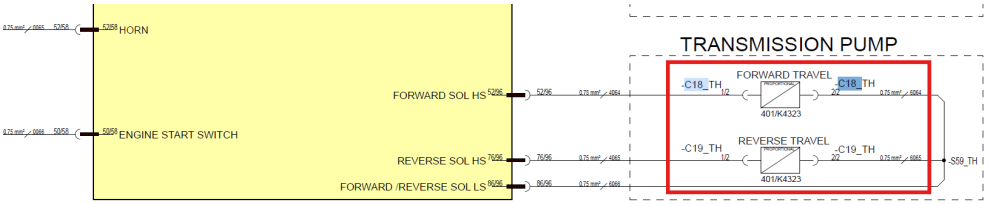

5.1.31 B1035-13

Error code:	**B1035-13**
ECU	Base ECU
Description :	FORWARD OR REVERSE Proportional Solenoid Valve Low Side Open Circuit
Component :	Drive Solenoid
Vehicle reaction:	Detect failure mode with Safe out method - Switch drive output (but not steer) to off (Brake comes ON automatically)
Possible Cause:	1. A poor connection or damaged terminal within the connector(s) 2. A damaged or broken wire within the wiring harness 3. Component is damaged
Service Action:	1. Check harness from Base Bosch ECU through to Transmission Pump connectors -C18_TH and -C19_TH.

© 2025 Enter your company name

	2. Ensure connectors are fully seated. Check all terminals are present and not backed out inside connectors. Ensure wire is correctly terminated at terminals. Perform continuity tests on the harness. 3. check no damage to Base Bosch ECU connectors, Pump connectors or and visible damage to harness including abrasion and pinching 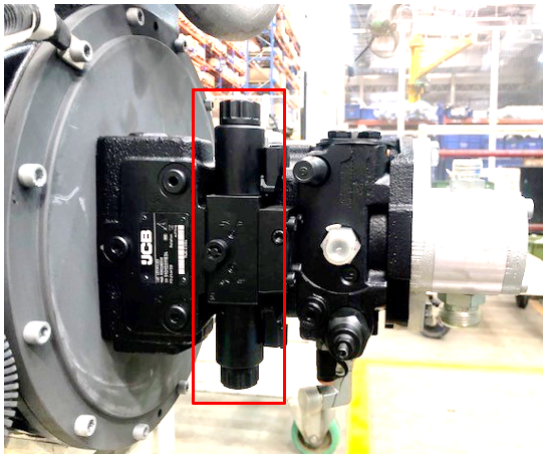 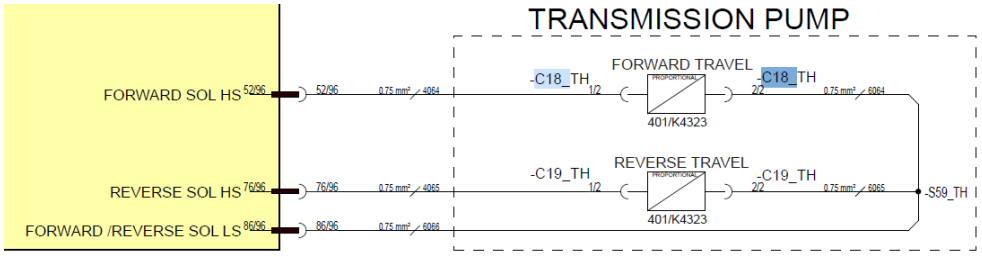

5.1.32 B1036-17

Error code:	B1036-17
ECU	Base ECU
Description:	Public proportional output solenoid short circuit to high (>10.5V)
Component:	Public proportional output solenoid
Vehicle reaction:	Public proportional solenoid will be switched off, this will effect:Articulated boom, steer, leveling, jib, platform rotate, telescopic boom.
Possible Cause:	1. Poor connection 2. Break in wiring

© 2025 Enter your company name

	3. Water in connector 4. Broken pin or connector 5. Damage solenoid
Service Action:	1. Check resistance of the coil 5-10 ohms 2. Check wiring from ECU to the coil 3. Turn machine ignition on/off to clear code 4. Check wire on solenoid connector C11_TH Pin 1 and 2. 5. Check wire no. 4047 and 4058 for any loose connection, cut or any damage. 6. Check if valve is mechanically jammed 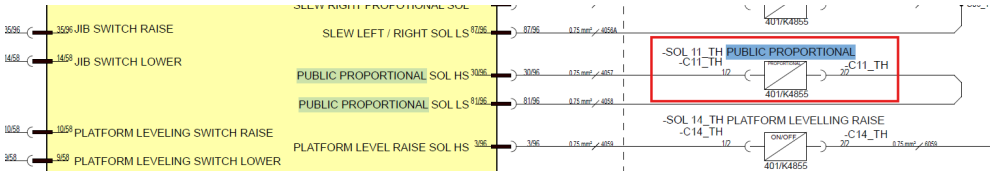

5.1.33 B1037-16

Error code:	**B1037-16**
ECU	Base ECU
Description:	Public proportional output solenoid short circuit to low.
Component:	Public proportional output solenoid
Vehicle reaction:	Public proportional solenoid will be switched off, this will effect:Articulated boom, steer, leveling, jib, platform rotate, telescopic boom.
Possible Cause:	1. Poor connection 2. Break in wiring 3. Water in connector 4. Broken pin or connector

© 2025 Enter your company name

	5. Damage solenoid
Service Action:	1. Check resistance of the coil 5-10 ohms 2. Check wiring from ECU to the coil 3. Turn machine ignition on/off to clear code 4. Check wire on solenoid connector C11_TH Pin 1 and 2. 5. Check wire no. 4047 and 4058 for any loose connection, cut or any damage. 6. Check if valve is mechanically jammed 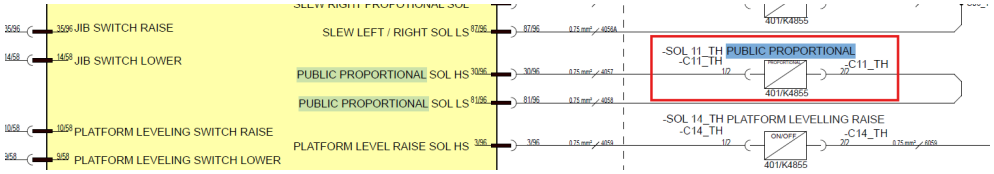

5.1.34 B1038-13

Error code:	**B1038-13**
ECU	Base ECU
Description:	PUBLIC Proportional Solenoid Valve High Side & Low Side Open Circuit
Component:	PUBLIC Proportional Solenoid Valve
Vehicle reaction:	Public proportional solenoid will be switched off, this will effect:Articulated boom, steer, leveling, jib, platform rotate, telescopic boom
Possible Cause:	1. Poor connection 2. Break in wiring 3. Water in connector 4. Broken pin or connector 5. Damage solenoid

© 2025 Enter your company name

Service Action:	1. Check resistance of the coil 5-10 ohms 2. Check wiring from ECU to the coil 3. Turn machine ignition on/off to clear code 4. Check wire on solenoid connector C11_TH Pin 1 and 2. 5. Check wire no. 4047 and 4058 for any loose connection, cut or any damage. 6. Check if valve is mechanically jammed 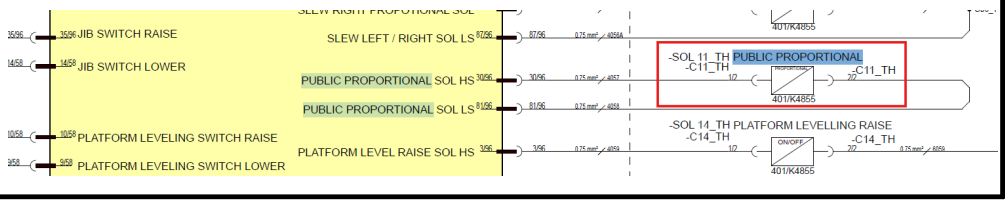

5.1.35 B1039-17

Error code:	**B1039-17**
ECU	Base ECU
Description :	PLATFORM LEVELING DIRECTIONAL Solenoid Valve Raise High Side Short Circuit to High OR Open Circuit
Component :	PLATFORM LEVELING DIRECTIONAL Solenoid Valve
Vehicle reaction:	Detect failure modes. Don’t disable any output and don’t ignore any input Note: Before Ignition ON, POST Fail (stuck in startup logic) and Generic output fault.
Possible Cause:	1. Poor connection 2. Break in wiring 3. Water in connector 4. Broken pin or connector 5. Damage solenoid
Service Action:	1. Check resistance of the coil 5-10 ohms 2. Check wiring from ECU to the coil wire no 4059

© 2025 Enter your company name

	3. Check Ground wire 6059 4. Check wire on solenoid connector C14_TH Pin 1 and 2. 5. Check wire no. 4047 and 4058 for any loose connection, cut or any damage 6. Check Base ECU pin 3/96 for bent or loose connection. 7. Check if valve is mechanically jammed 8. Turn machine ignition on/off to clear code 

5.1.36 B1040-16

Error code:	B1040-16
ECU	Base ECU
Description:	PLATFORM LEVELING DIRECTIONAL Solenoid Valve Raise High Side Short Circuit to Low
Component:	PLATFORM LEVELING DIRECTIONAL Solenoid Valve Raise
Vehicle reaction:	Detect failure modes. Don’t disable any output and don’t ignore any input
Possible Cause:	1. Poor connection 2. Break in wiring 3. Water in connector 4. Broken pin or connector 5. Damage solenoid
Service Action:	1. Check resistance of the coil 5-10 ohms 2. Check wiring from ECU to the coil wire no 4059 3. Check Ground wire 6059 4. Check wire on solenoid connector C14_TH Pin 1 and 2. 5. Check Base ECU pin 3/96 for bent or loose connection.

© 2025 Enter your company name

	6. Check if valve is mechanically jammed 7. Turn machine ignition on/off to clear code 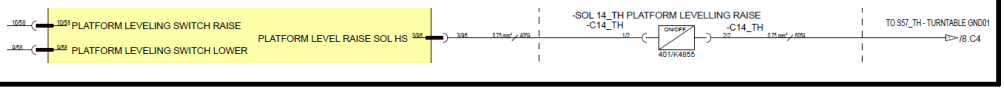

5.1.37 B1041-17

Error code:	**B1041-17**
ECU	Base ECU
Description :	PLATFORM LEVELING DIRECTIONAL Solenoid Valve Lower High Side Short Circuit to High OR Open Circuit
Component :	PLATFORM LEVELING DIRECTIONAL Solenoid Valve
Vehicle reaction:	Detect failure modes. Don’t disable any output and don’t ignore any input Note: Before Ignition ON, POST Fail (stuck in startup logic) and Generic output fault.
Possible Cause:	1. Poor connection 2. Break in wiring 3. Water in connector 4. Broken pin or connector 5. Damage solenoid
Service Action:	1. Check resistance of the coil 5-10 ohms 2. Check wiring from ECU to the coil wire no 4060 3. Check Ground wire 6060 4. Check wire on solenoid connector C15_TH Pin 1 and 2. 5. Check Base ECU pin 57/58 for bent or loose connection. 6. Check if valve is mechanically jammed 7. Turn machine ignition on/off to clear code

© 2025 Enter your company name

	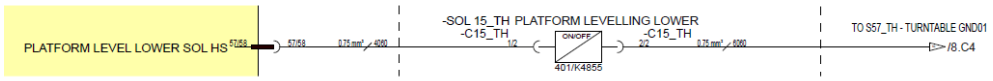

5.1.38 **B1042-16**

Error code:	**B1042-16**
ECU	Base ECU
Description :	PLATFORM LEVELING DIRECTIONAL Solenoid Valve Lower High Side Short Circuit to Low
Component :	PLATFORM LEVELING DIRECTIONAL Solenoid Valve
Vehicle reaction:	Detect failure modes. Don't disable any output and don't ignore any input
Possible Cause:	1. Poor connection 2. Break in wiring 3. Water in connector 4. Broken pin or connector 5. Damage solenoid
Service Action:	1. Check resistance of the coil 5-10 ohms 2. Check wiring from ECU to the coil wire no 4060 3. Check Ground wire 6060 4. Check wire on solenoid connector C15_TH Pin 1 and 2. 5. Check Base ECU pin 57/58 for bent or loose connection. 6. Check if valve is mechanically jammed 7. Turn machine ignition on/off to clear code 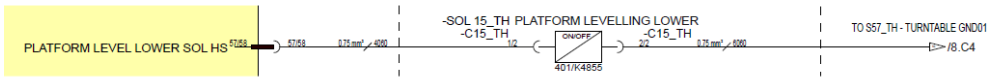

© 2025 Enter your company name

5.1.39 B1043-17

Error code:	B1043-17
ECU	Base ECU
Description :	OSCILLATING AXLE Solenoid Valve High Side Short Circuit to High
Component :	Oscillating Axle Solenoid
Vehicle reaction:	Detect failure mode with Safout method - Switch Axle Lock output to off; Before Ignition ON, POST Fail (stuck in startup logic) and Generic output fault
Possible Cause:	1. A short circuit within the wiring harness 2. A short circuit within the harness connectors 3. Water damage/ingress within the harness connectors 4. Damaged component
Service Action:	1. Check harness from Base Bosch ECU through interconnect -C24_TH / -C24_TH and through to -C02_CH (Axle Lock Solenoid connector). Disconnect connectors and check for short circuit to high (12V) 2. Check condition of all connectors, especially for bent pins and shorts within the connectors. 3. Check for any water ingress inside the connector housings, ECU built in connector and Solenoid connector. 4. check harness for damage, especially abrasions and pinching and check all connectors, solenoid valve and ECU for any visual defects. 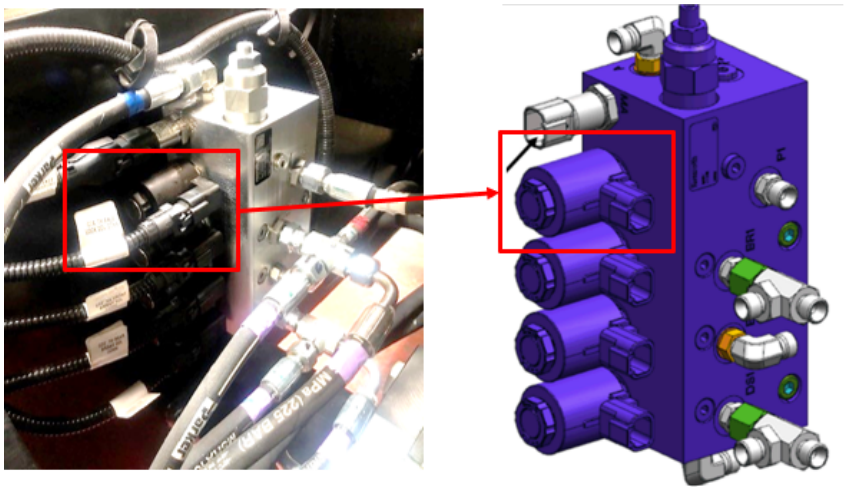

© 2025 Enter your company name

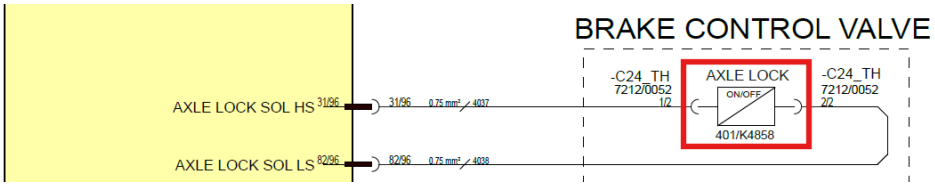

5.1.40 B1044-16

Error code:	B1044-16
ECU	Base ECU
Description:	OSCILLATING AXLE Solenoid Valve High Side Short Circuit to Low
Component:	Oscillating Axle Solenoid
Vehicle reaction:	Detect failure mode with Safout method - Switch Axle Lock output to off;
Possible Cause:	1. A short circuit within the wiring harness 2. A short circuit to the chassis 3. A short circuit within the harness connectors 4. Water damage/ingress within the harness connectors 5. Damaged component
Service Action:	1. Check harness from Base Bosch ECU through interconnect -C24_TH / -C24_TH and through to -C02_CH (Axle Lock Solenoid connector). 2. Disconnect connectors and check for short circuit to GND 3. Check condition of all connectors, especially for bent pins and shorts within the connectors. 4. Check for any water ingress inside the connector housings, ECU built in connector and Solenoid connector. 5. check harness for damage, especially abrasions and pinching and check all connectors, solenoid valve and ECU for any visual defects.

© 2025 Enter your company name

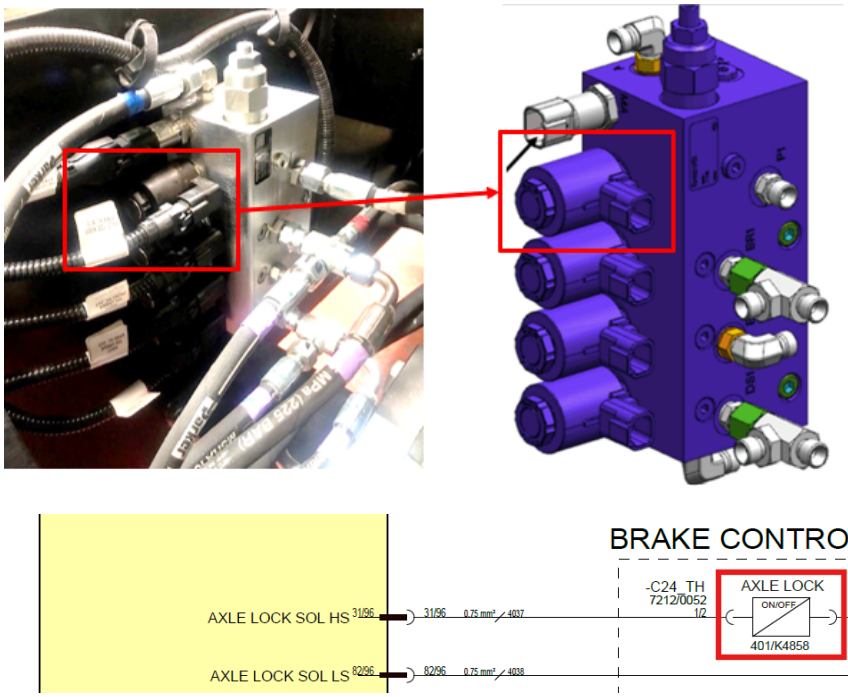

5.1.41 **B1045-13**

Error code:	**B1045-13**
ECU	Base ECU
Description :	OSCILLATING AXLE Solenoid Valve High Side & Low Side Open Circuit
Component :	Oscillating Axle Solenoid
Vehicle reaction:	Detect failure mode with Safe out method - Switch Axle Lock output to off;
Possible Cause:	1. A poor connection or damaged terminal within the connector(s) 2. A damaged or broken wire within the wiring harness 3. Component is damaged
Service Action:	1. Check harness from Base Bosch ECU through to Brake Control Valve - C24_TH and -C24_TH(Wire 4037 and 4038). 2. Ensure connectors are fully seated. Check all terminals are present and not backed out inside connectors. Ensure wire is correctly terminated at terminals. Perform continuity tests on the harness. 3. check no damage to Base Bosch ECU connectors, Brake Control Valve connectors or and visible damage to harness including abrasion and pinching

© 2025 Enter your company name

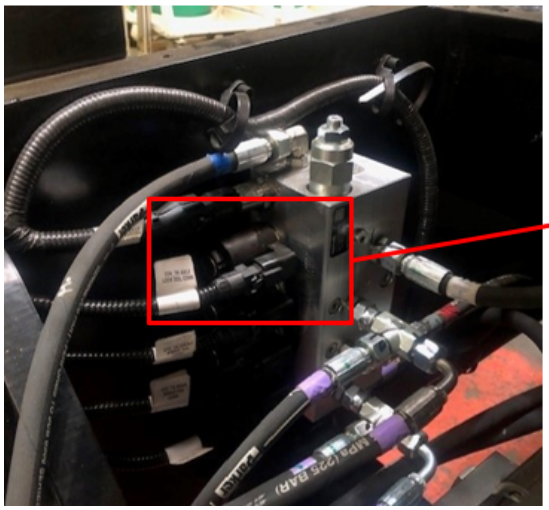

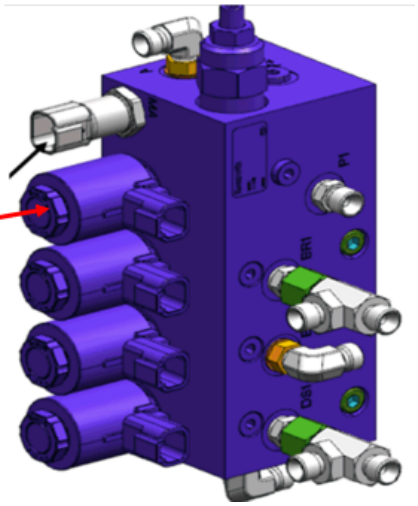

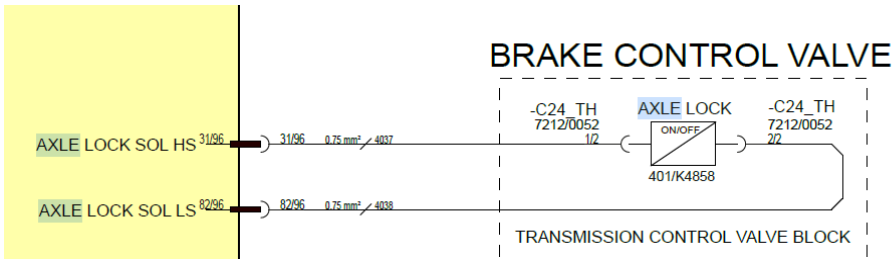

5.1.42 B1046-17

Error code:	B1046-17
ECU	Base ECU
Description:	HIGH TORQUE/LOW SPEED Solenoid Valve Short Circuit to High or Open Circuit
Component:	High Torque Solenoid
Vehicle reaction:	Detect failure mode. Disable High torque solenoid
Possible Cause:	1. A short circuit within the wiring harness 2. A short circuit within the harness connectors 3. Water damage/ingress within the harness connectors 4. Damaged component
Service Action:	1. Check connector -C23_TH at High Torque Solenoid, Ensure it is seated firmly. Check Interconnect -C23_TH / -C23_TH, terminal 5/12. Check Terminal at Base Bosch ECU Connector, terminal 42/58.

© 2025 Enter your company name

	2. Inspect wiring from ECU to High Torque Solenoid connector. Check Continuity from -C23_TH pin 1 to ECU Connector 42/58. Check continuity from -C23_TH Pin 2 to GND. 3. Check all connectors for water ingress 4. Check harness especially for abrasions and pinching. Check condition of Connectors, checking especially for backed out or bent pins. 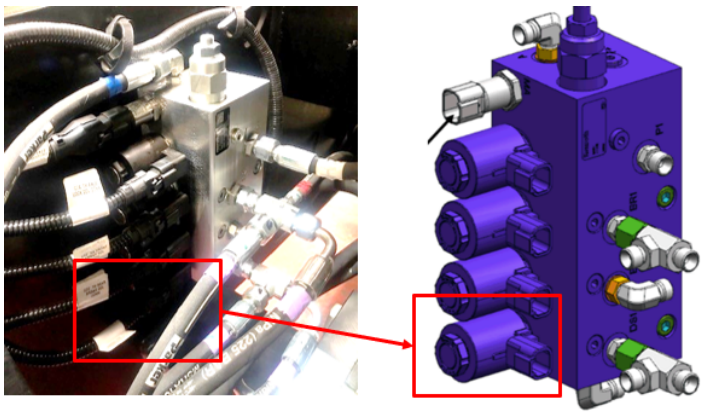 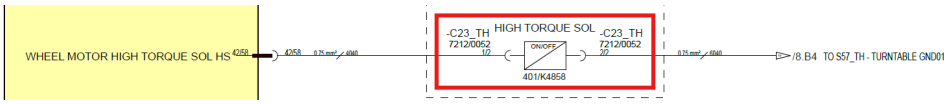

5.1.43 **B1047-16**

Error code:	**B1047-16**
ECU	Base ECU
Description :	HIGH TORQUE/LOW SPEED Solenoid Valve Short Circuit to Low
Component :	High Torque Solenoid
Vehicle reaction:	Detect failure mode. Disable High torque solenoid
Possible Cause:	1. A short circuit within the wiring harness 2. A short circuit to the chassis 3. A short circuit within the harness connectors 4. Water damage/ingress within the harness connectors 5. Damaged component
Service Action:	1. Check connector -C23_TH at High Torque Solenoid, Ensure it is seated firmly. Check Interconnect -C23_TH / -C23_TH, terminal 5/12. Check Terminal at Base Bosch ECU Connector, terminal 42/58.

© 2025 Enter your company name

	2. With Solenoid connector disconnected, Measure resistance from -C23_TH Pin 1 to Pin 2. This should be open circuit. 3. Inspect wiring from ECU to High Torque Solenoid connector. Check Continuity from -C23_TH pin 1 to ECU Connector 42/58. Check continuity from -C23_TH Pin 2 to GND. 4. Check all connectors for water ingress 5. Check harness especially for abrasions and pinching. Check condition of Connectors, checking especially for backed out or bent pins. 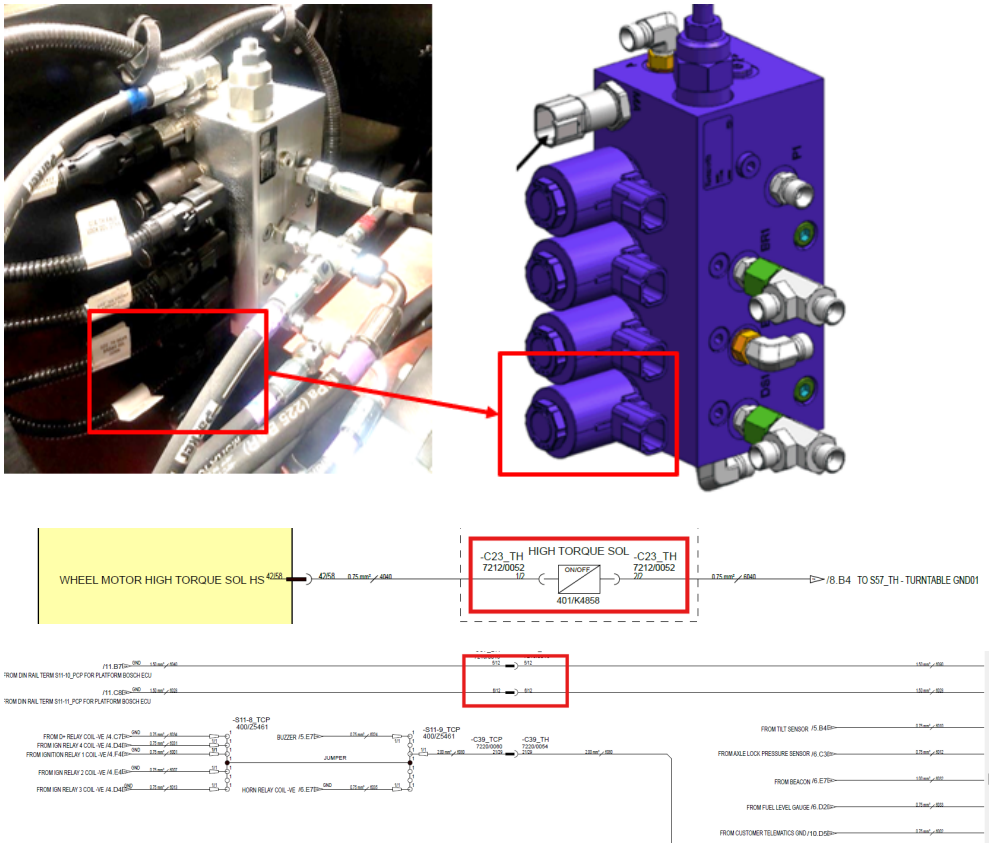

5.1.44 B1048-17

Error code:	B1048-17
ECU	Base ECU
Description:	FRONT BRAKE Solenoid Valve Short Circuit to High or Open Circuit
Component:	Front Brakes Solenoid
Vehicle reaction:	Detect failure modes. Don't disable any output and don't ignore any input

© 2025 Enter your company name

Possible Cause:	1. A short circuit within the wiring harness 2. A short circuit within the harness connectors 3. Water damage/ingress within the harness connectors 4. Damaged component
Service Action:	1. Check connector -C12_TH at Front Brake Solenoid, Ensure it is seated firmly. Check Interconnect -C12_TH / -C12_TH, terminal 4/12. Check Terminal at Base Bosch ECU Connector, terminal 26/96. 2. Inspect wiring from ECU to Front Brake Solenoid connector. Check Continuity from -C12 pin 1 to ECU Connector 26/96. Check continuity from -C12_CH Pin 2 to GND. 3. Check all connectors for water ingress 4. Check harness especially for abrasions and pinching. Check condition of Connectors, checking especially for backed out or bent pins. 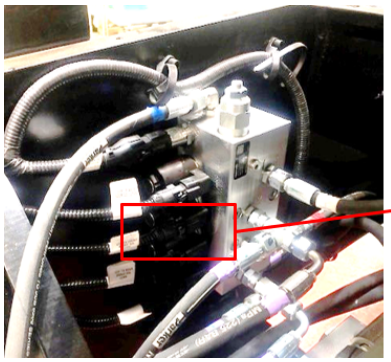 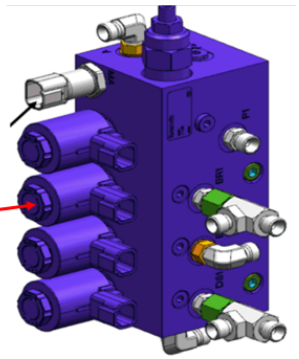 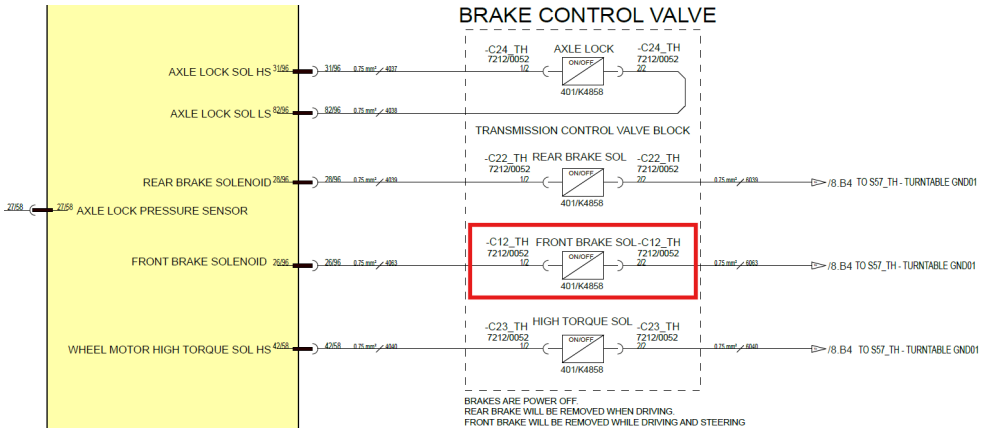

5.1.45 B1049-16

Error code:	**B1049-16**
ECU	Base ECU
Description:	FRONT BRAKE Solenoid Valve Raise Short Circuit to Low

© 2025 Enter your company name

Component :	Front Brakes Solenoid
Vehicle reaction:	Detect failure modes. Don’t disable any output and don’t ignore any input
Possible Cause:	1. A short circuit within the wiring harness 2. A short circuit to the chassis 3. A short circuit within the harness connectors 4. Water damage/ingress within the harness connectors 5. Damaged component
Service Action:	1. Check connector -C12_TH at Front Brake Solenoid, Ensure it is seated firmly. Check Interconnect -C12_TH / -C12_TH, terminal 4/12. Check Terminal at Base Bosch ECU Connector, terminal 26/96. 2. With Solenoid connector disconnected, Measure resistance from -C12_TH Pin 1 to Pin 2. This should be open circuit. 3. Inspect wiring from ECU to Front Brake Solenoid connector. Check Continuity from -C12_TH pin 1 to ECU Connector 26/96. Check continuity from -C12_TH Pin 2 to GND. 4. Check all connectors for water ingress 5. Check harness especially for abrasions and pinching. Check condition of Connectors, checking especially for backed out or bent pins. 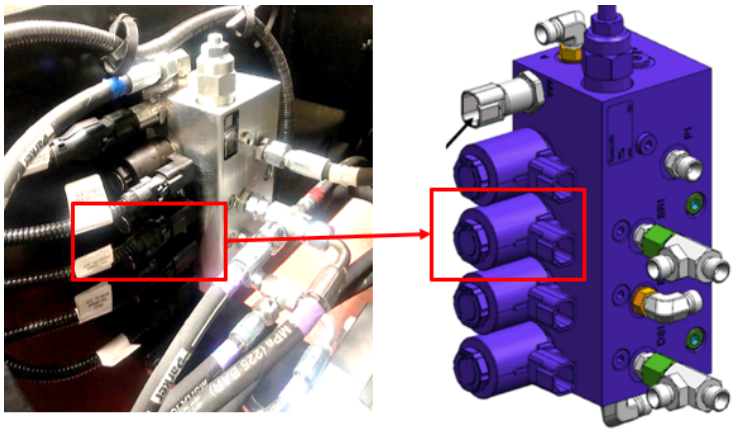 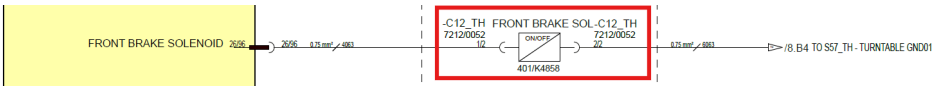

© 2025 Enter your company name

	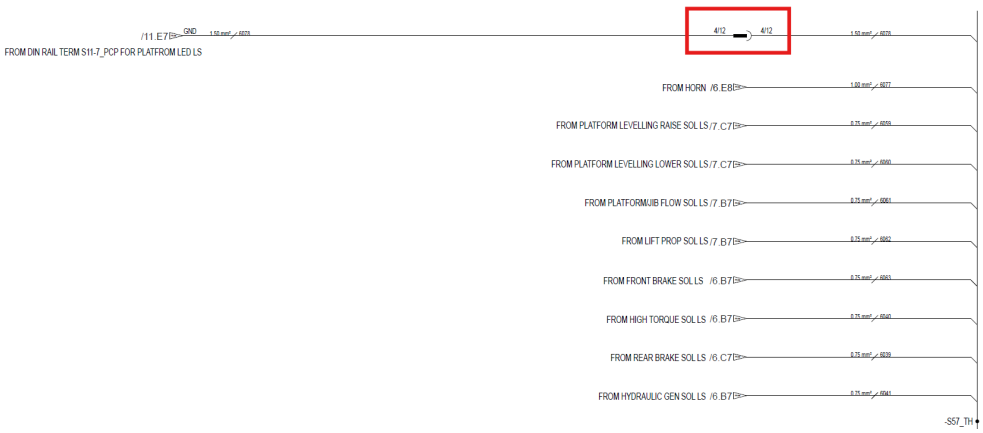

5.1.46 B1050-17

Error code:	B1050-17
ECU	Base ECU
Description:	Engine Start/Stop - Base Engine Start/Stop Button Short Circuit to High.
Component:	Engine Start/Stop Button
Vehicle reaction:	Detect failure mode; Ignore input (switch off engine)
Possible Cause:	1. A short circuit within the wiring harness 2. A short circuit within the harness connectors 3. Water damage/ingress within the harness connectors 4. Damaged component
Service Action:	1. Inspect Engine Start Switch -SW105_TCP. Inspect wiring to Switch. With switch unpressed - Pin 1 should measure +10V, Pin 2 should measure 0V. Check wire #0066 from switch to interconnects -C50_TCP pin 21/31, -C50_TH Pin 21/31 and through to the Base Bosch ECU pin 50/58. 2. Check Interconnect terminals and Bosch ECU terminals for damage or bent pins. Check wire connections to terminals. 3. Check all connectors for water ingress. 4. Check harness especially for abrasions and pinching. Check condition of connectors, checking especially for backed out or bent pins.

© 2025 Enter your company name





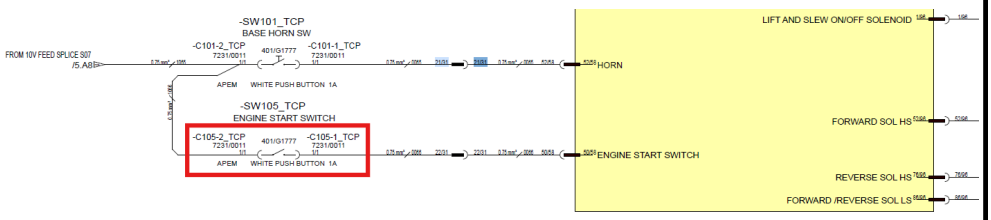

5.1.47 B1051-16

Error code:	B1051-16
ECU	Base ECU
Description:	Engine Start/Stop - Base Engine Start/Stop Button Short Circuit to Low.
Component:	Engine Start/Stop Button
Vehicle reaction:	Detect failure mode; Ignore input (switch off engine)
Possible Cause:	1. A short circuit within the wiring harness 2. A short circuit to the chassis 3. A short circuit within the harness connectors 4. Water damage/ingress within the harness connectors 5. Damaged component
Service Action:	1. Inspect Engine Start Switch -SW105_TCP. Inspect wiring to Switch. With switch unpressed - Pin 1 should measure +10V, Pin 2 should measure 0V. When pressed, Pin 2 should measure +10V. Check wire #0066 from switch to interconnects -C50_TCP pin 21/31, -C50_TH Pin 21/31 and through to the Base Bosch ECU pin 50/58.

© 2025 Enter your company name

	2. Check wire #0066 is not shorted to GND 3. Check Interconnect terminals and Bosch ECU terminals for damage or bent pins. Check wire connections to terminals. 4. Check all connectors for water ingress. 5. Check harness especially for abrasions and pinching. Check condition of connectors, checking especially for backed out or bent pins.   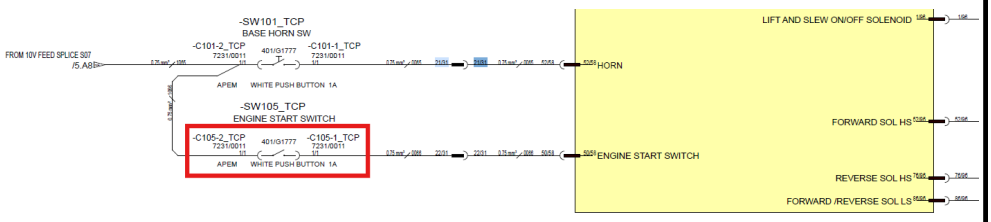

5.1.48 B1052-24

Error code:	B1052-24
ECU	Base ECU
Description:	Engine Start/Stop - Base Engine Start/Stop Button Stuck for >10s.
Component:	Engine Start/Stop Button
Vehicle reaction:	Detect failure mode; Ignore input (switch off engine)
Possible Cause:	1. Button failure / Damage 2. Short circuit within the harness 3. Water damage/ingress within the harness connectors 4. Damaged component

© 2025 Enter your company name

Service Action:	1. Disconnect connectors -C105-1_TCP and -C105-2_TCP from the Engine Start Switch -SW105_TCP. Use a multimeter to test the operation of the switch. 2. Check wire #0066 is not shorted to +10V. Check wire #0066 from switch to interconnects -C50_TCP pin 22/31, -C50_TH Pin 22/31 and through to the Base Bosch ECU pin 50/58. 3. Check all connectors for water ingress. 4. Check harness especially for abrasions and pinching. Check condition of connectors, checking especially for backed out or bent pins  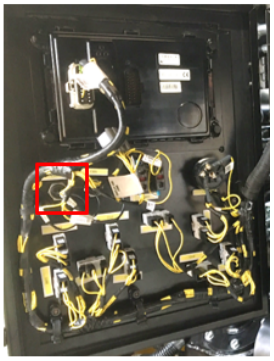 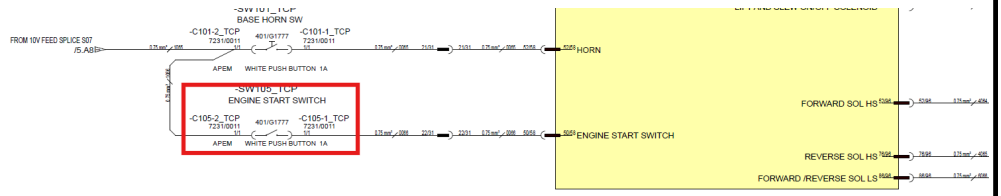

5.1.49 B1053-17

Error code:	**B1053-17**
ECU	Platform ECU
Description:	Platform 10v Output - Foot Pedal Short Circuit to High
Component:	Foot Pedal
Vehicle reaction:	Before operation: Detect fault and ignore the input (allow base operation) After operation: Refer to 10V System Short Circuit Fault reaction
Possible Cause:	1. A short circuit within the wiring harness 2. A short circuit within the harness connectors

© 2025 Enter your company name

	3. Water damage/ingress within the harness connectors 4. Damaged component
Service Action:	1. Disconnect the foot switch connector from the platform harness connector -C220_PH. Measure voltage at -C220_PH Pin 2. Voltage should read 2.5 - 3.0V. If voltage is above 10V then there is a short to High (12VDC) in wire #4096. Check wiring through interconnects-C22_PH / -C22_PCP pin K back to the Platform ECU pin 47/96. 2. Check no shorts exist within the Foot switch connector, Interconnects and Platform ECU Connector. Check ECU for bent pins. 3. Check no water ingress in any of the connectors. 4. check operation of the switch pedal. Check all connectors and harness for visible damage, especially abrasions and pinching.  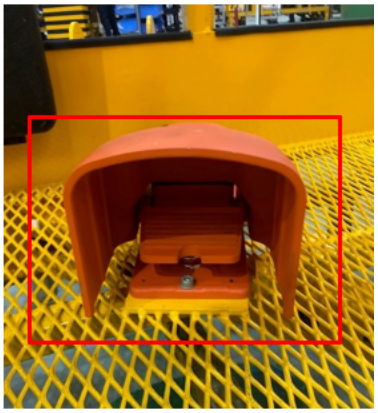 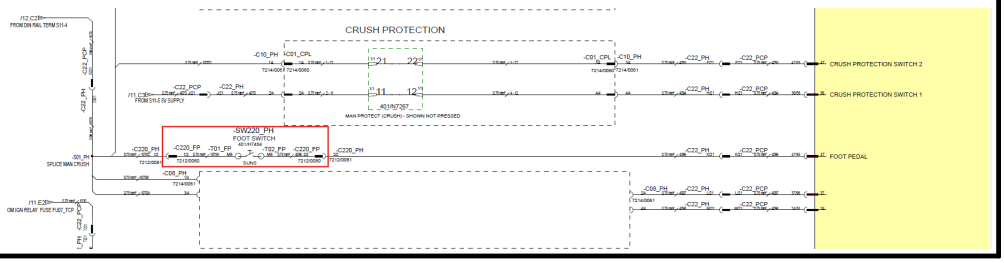

5.1.50 B1054-16

Error code:	**B1054-16**
ECU	Platform ECU
Description:	Platform 10v Output - Foot Pedal Short Circuit to Low
Component:	Foot Pedal

© 2025 Enter your company name

Vehicle reaction:	Before operation: Detect fault and ignore the input (allow base operation) After operation: Refer to 10V System Short Circuit Fault reaction
Possible Cause:	1. A short circuit within the wiring harness 2. A short circuit to the chassis 3. A short circuit within the harness connectors 4. Water damage/ingress within the harness connectors 5. Damaged component
Service Action:	1. Disconnect the foot switch connector from the platform harness connector -C220_PH. Measure voltage at -C220_PH Pin 2. Voltage should read 2.5 - 3.0V. If voltage is 0V (or close to 0V compared to 2.5V) then there is a short to GND in wire #4096. Check wiring through interconnects-C22_PH / -C22_PCP pin K back to the Platform ECU pin 47/96. 2. Check no shorts exist within the Foot switch connector, Interconnects and Platform ECU Connector. Check ECU for bent pins. 3. Check no water ingress in any of the connectors. 4. check operation of the switch pedal, ensuring no short exists between the foot switch connector terminals and GND. Check all connectors and harness for visible damage, especially abrasions and pinching.   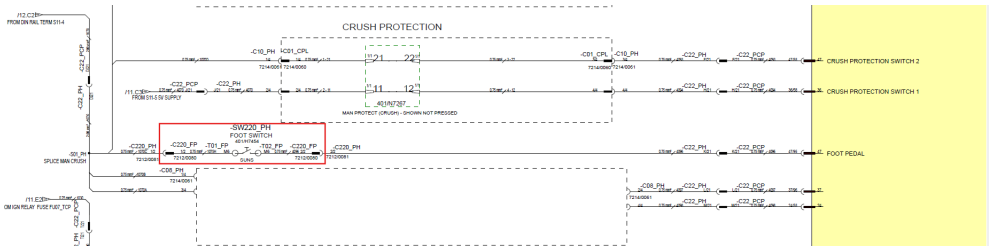

5.1.51 **B1055-17**

Error code:	**B1055-17**

© 2025 Enter your company name

ECU	Platform ECU
Description :	Aux Pump Switch - Unpressed - Short Circuit to High
Component :	Platform Aux Switch
Vehicle reaction:	Detect failure mode; Ignore input
Possible Cause:	1. A short circuit within the wiring harness 2. A short circuit within the harness connectors 3. Water damage/ingress within the harness connectors 4. Damaged component
Service Action:	1. Check switch Aux Pump Switch -SW209_PCP. Check Wire #0088 from Aux Switch connector -C209-2_PCP to Platform Bosch ECU Pin 43/96. Voltage should be +10V 2. Check Voltage a Aux Pump Switch Pin 2 at -C209-2_PCP. This should be +10V 3. Check Operation of switch 4. Check all connectors for water ingress. 5 Check harness especially for abrasions and pinching. Check condition of connectors, checking especially for backed out or bent pins 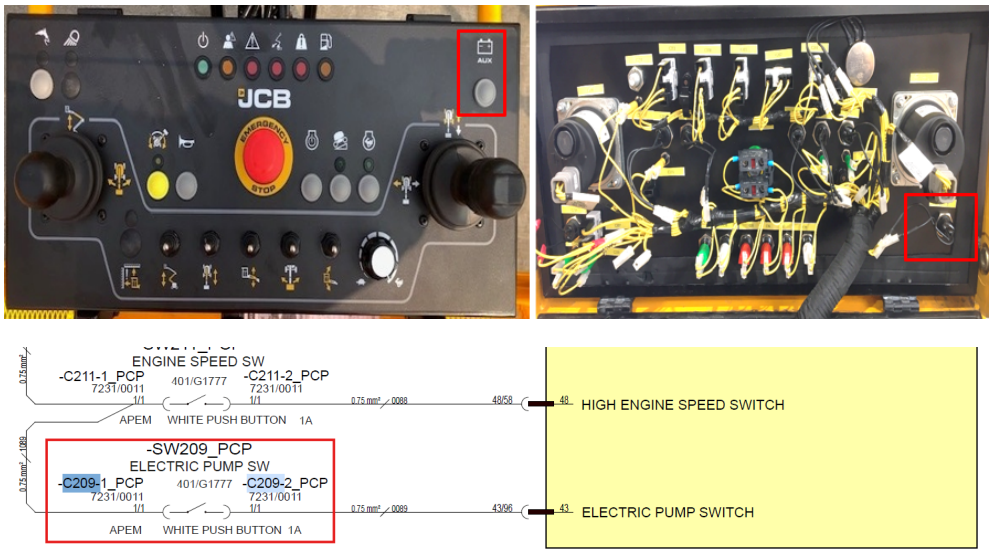

5.1.52 **B1056-16**

Error code:	**B1056-16**

© 2025 Enter your company name

ECU	Platform ECU
Description:	Aux Pump Switch - Unpressed - Short Circuit to Low
Component:	Platform Aux Switch
Vehicle reaction:	Detect failure mode; Ignore input
Possible Cause:	1. A short circuit within the wiring harness 2. A short circuit to the chassis 3. A short circuit within the harness connectors 4. Water damage/ingress within the harness connectors 5. Damaged component
Service Action:	1. Check switch Aux Pump Switch -SW209_PCP. Check Wire #0089 from Aux Switch connector -C209-3_PCP to Platform Bosch ECU Pin 49/96. Voltage should be +0V 2. Check Voltage a Aux Pump Switch Pin 2 at -C209-2_PCP. This should be +10V 3. Check Operation of switch 4. Check all connectors for water ingress. 5. Check harness especially for abrasions and pinching. Check condition of connectors, checking especially for backed out or bent pins  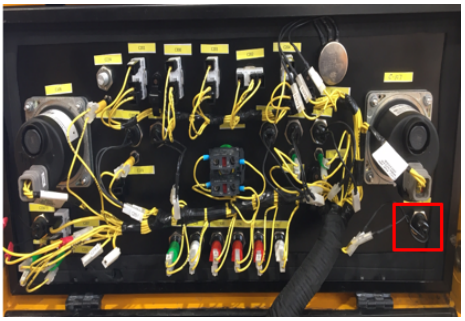 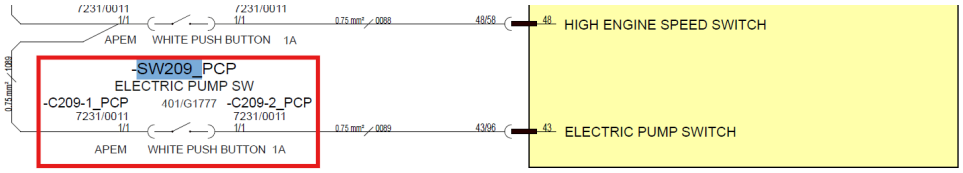

5.1.53 B1058-17

Error code:	**B1058-17**
ECU	Base ECU

© 2025 Enter your company name

Description:	Override switch pressed short circuit to high
Component:	Override switch
Vehicle reaction:	Input will be ignored
Possible Cause:	1. A short circuit within the wiring harness 2. A short circuit within the harness connectors 3. Water damage/ingress within the harness connectors 4. Damaged component
Service Action:	1. Check wiring between Override Switch and Base Bosch ECU for Voltage greater than 10.5 volts. Check interconnect connector. Check wiring and diode between override switch and e-stop switch. 2. Disconnect connector to Bosch ECU, check continuity between override switch terminals -C200-3 & -C200-1. This should be 'Open Circuit'. Investigate if testing does not concur. 3. Check connectors are dry and free of any debris. Check for damaged pins on the Bosch connectors. 4. Check operation of Override Switch. 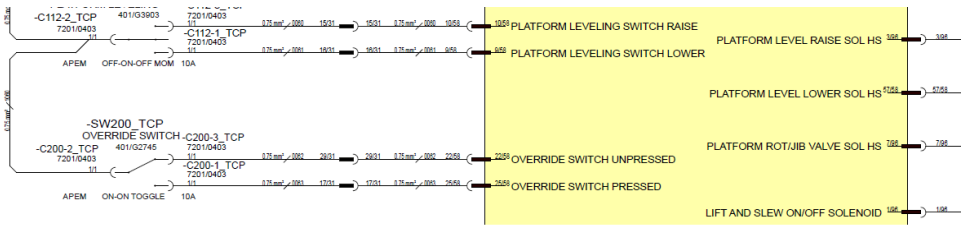

5.1.54 B1059-16

Error code:	**B1059-16**
ECU	Base ECU
Description:	E-Stop & Base Override - Override Switch Pressed Short Circuit to Low
Component:	Base Override Switch
Vehicle reaction:	Detect failure mode; Ignore input Default to Override unpressed state

© 2025 Enter your company name

Possible Cause:	1. A short circuit within the wiring harness 2. A short circuit to the chassis 3. A short circuit within the harness connectors 4. Water damage/ingress within the harness connectors 5. Damaged component
Service Action:	1. Check wiring between Override Switch and Base Bosch ECU. Check interconnect connector. Check wiring and diode between override switch and e-stop switch. 2. Check the wiring has not been shorted to the chassis of the vehicle (caused perhaps by pinching or abrasion). 3. Disconnect connector to Bosch ECU, check continuity between override switch terminals -C200-3 & -C200-1. This should be 'Open Circuit'. Investigate if testing does not concur. 4. Check connectors are dry and free of any debris. Check for damaged pins on the Bosch connectors. 5. Check operation of Override Switch. Check for any physical damage to the switch, connectors or harness components.



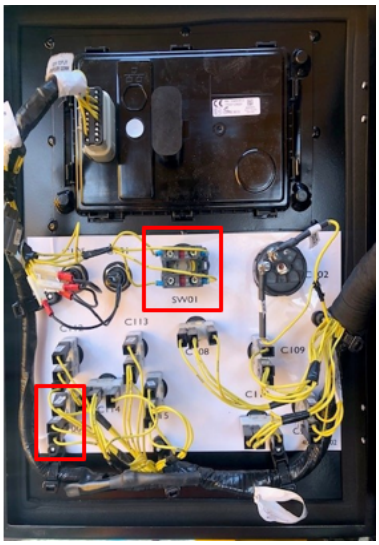

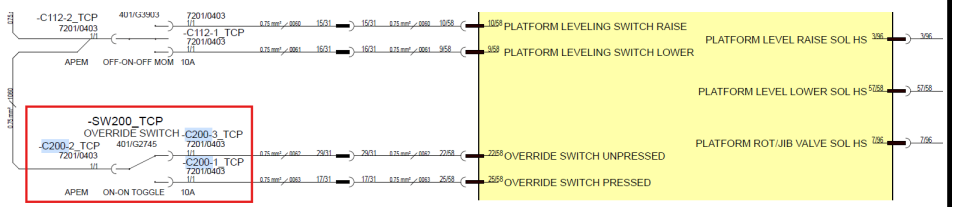

5.1.55 B1060-13

Error code:	**B1060-13**
ECU	Base ECU

© 2025 Enter your company name

Description:	E-Stop & Base Override - Override Switch Pressed and Override Switch Unpressed Open Circuit
Component:	Base Override Switch
Vehicle reaction:	1. Detect failure mode; Ignore input 2. Default to Override unpressed state
Possible Cause:	1. A poor connection or damaged terminal within the connector(s) 2. A damaged or broken wire within the wiring harness 3. Component is damaged
Service Action:	1. Check for broken wires at terminals of Override switch, Interconnect and Base Bosch ECU connectors. Check for 'backed out' terminals on Bosch connectors. Check Connectors were engaged or plugged in correctly. 2. Check continuity from Override switch to interconnect and from interconnect to Bosch ECU. 3. Check operation of Override Switch. Check for any physical damage to the switch, connectors or harness components.  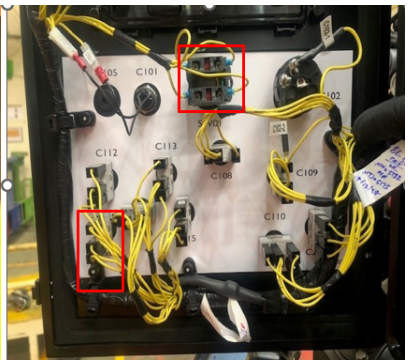 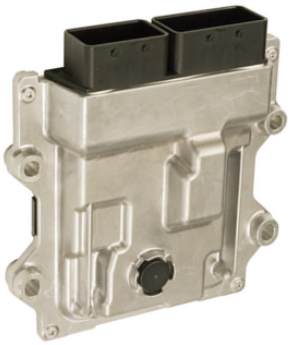 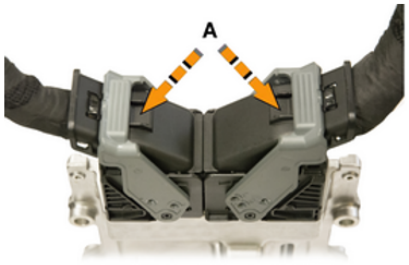

© 2025 Enter your company name

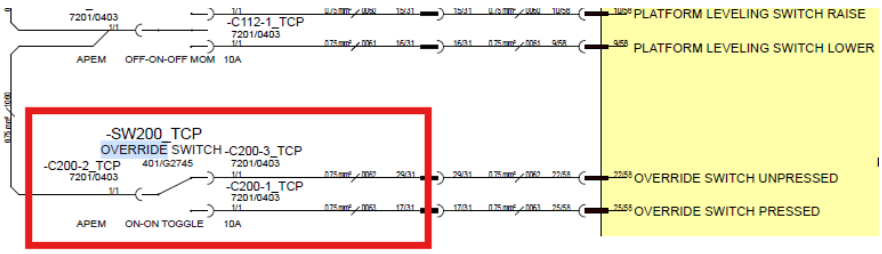

5.1.56 **B1061-17**

Error code:	**B1061-17**
ECU	Base ECU
Description:	Override switch unpressed short circuit to high
Component:	Override switch
Vehicle reaction:	Input will be ignored
Possible Cause:	1. A short circuit within the wiring harness 2. A short circuit within the harness connectors 3. Water damage/ingress within the harness connectors 4. Damaged component
Service Action:	1. Check wiring between Override Switch and Base Bosch ECU for Voltage greater than 10.5 volts. Check interconnect connector. Check wiring and diode between override switch and e-stop switch. 2. Disconnect connector to Bosch ECU, check continuity between override switch terminals -C200-3 & -C200-1. This should be 'Open Circuit'. Investigate if testing does not concur. 3. Check connectors are dry and free of any debris. Check for damaged pins on the Bosch connectors. 4. Check operation of Override Switch. 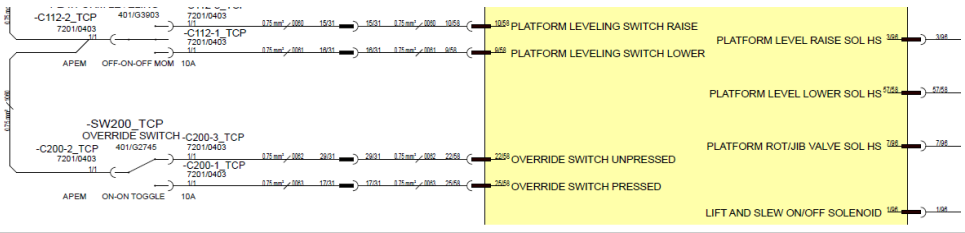

© 2025 Enter your company name

5.1.57 B1062-16

Error code:	B1062-16
ECU	Base ECU
Description:	E-Stop & Base Override - Override Switch Unpressed Short Circuit to Low
Component:	Base Override Switch
Vehicle reaction:	Detect failure mode; Ignore input Default to Override unpressed state
Possible Cause:	1. A short circuit within the wiring harness 2. A short circuit to the chassis 3. A short circuit within the harness connectors 4. Water damage/ingress within the harness connectors 5. Damaged component
Service Action:	1. Check wiring between Override Switch and Base Bosch ECU. Check interconnect connector. Check wiring and diode between override switch and e-stop switch. Disconnect Bosch Base ECU and check continuity between override switch terminals -C200-3 & -C200-1 2. Check the wiring has not been shorted to the chassis of the vehicle (caused perhaps by pinching or abrasion). 3. Disconnect connector to Bosch ECU, check continuity between override switch terminals -C200-3 & -C200-1. This should be 'Open Circuit'. Investigate if testing does not concur. 4. Check connectors are dry and free of any debris. Check for damaged pins on the Bosch connectors. 5. Check operation of Override Switch. Check for any physical damage to the switch, connectors or harness components.

© 2025 Enter your company name



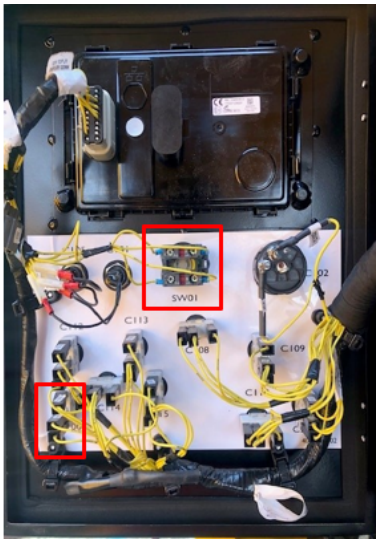

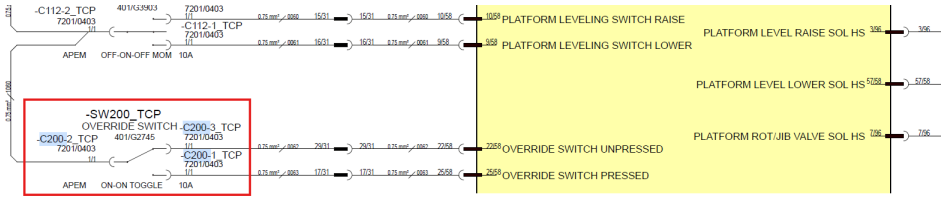

5.1.58 B1063-92

Error code:	B1063-92
ECU	Base ECU
Description:	E-Stop & Base Override - Override Switch Pressed and Override Switch Unpressed Both activated (5-10V)
Component:	Base Override Switch
Vehicle reaction:	Detect failure mode; Ignore input Default to Override unpressed state
Possible Cause:	1. A short circuit within the wiring harness 2. A short circuit within the harness connectors 3. Water damage/ingress within the harness connectors 4. Damaged component
Service Action:	1. Check wiring between Override Switch and Base Bosch ECU. Check interconnect connector. Check wiring and diode between override switch and e-stop switch. 2. Disconnect connector to Bosch ECU, check continuity between override

© 2025 Enter your company name

	switch terminals -C200-3 & -C200-1. This should be 'Open Circuit'. Investigate if testing does not concur. 3. Check connectors are dry and free of any debris. Check for damaged pins on the Bosch connectors. 4. Check operation of Override Switch.  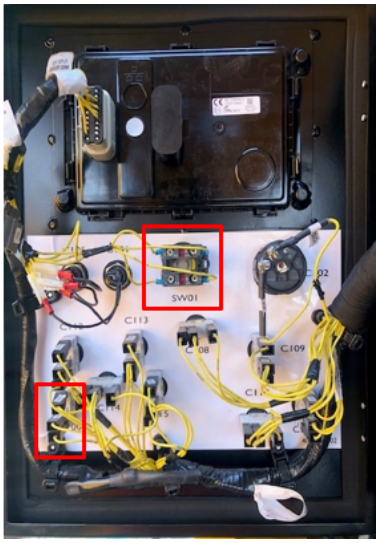 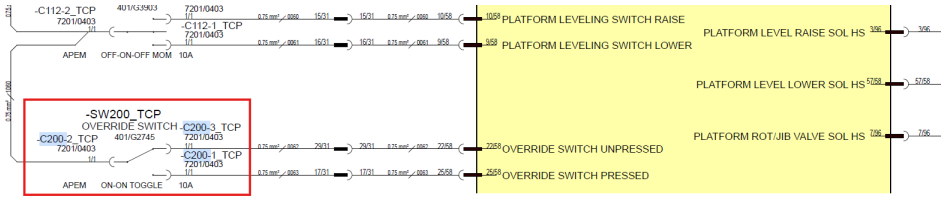

5.1.59 B1064-17

Error code:	B1064-17
ECU	Platform ECU
Description:	SLEW ACK SWITCH Short Circuit to High
Component:	Slew Acknowledgment Button
Vehicle reaction:	Detect failure mode; Ignore input
Possible Cause:	1. A short circuit within the wiring harness 2. A short circuit within the harness connectors 3. Water damage/ingress within the harness connectors 4. Damaged component

© 2025 Enter your company name

Service Action:	1. Disconnect -C205-2_PCP from the Slew Acknowledgment Switch. Measure voltage at -C205-2_PCP. If voltage is high (>5V) then there is a short circuit to high between the wiring from the terminal to the Platform Bosch ECU pin 51/58. 2. Check Platform Bosch ECU Connectors for any bent terminals or stray wiring. 3. Check all connectors / terminals for any water ingress. 4. Check operation of the Slew Acknowledgment switch. Check wiring for damage, especially abrasion or pinching.  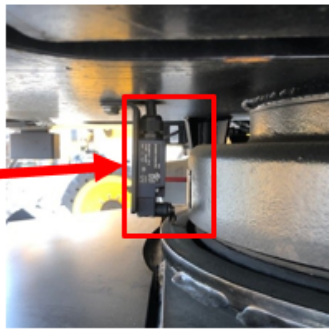 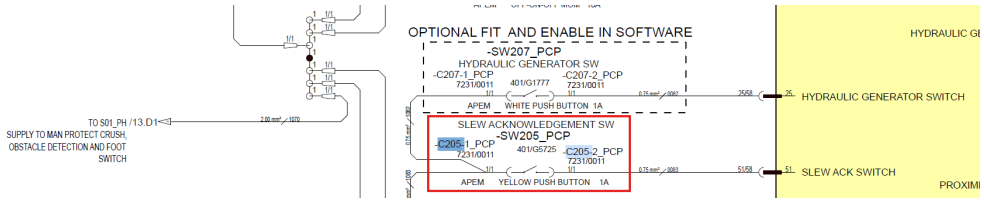

5.1.60 B1065-16

Error code:	**B1065-16**
ECU	Platform ECU
Description:	SLEW ACK SWITCH Short Circuit to Low
Component:	Slew Acknowledgment Button
Vehicle reaction:	Detect failure mode; Ignore input
Possible Cause:	1. A short circuit within the wiring harness 2. A short circuit to the chassis 3. A short circuit within the harness connectors

© 2025 Enter your company name

	4. Water damage/ingress within the harness connectors 5. Damaged component
Service Action:	1. Disconnect -C205-2_PCP from the Slew Acknowledgment Switch. Measure voltage at -C205-2_PCP. If voltage is Low (<2V) then there is a short circuit to Low between the wiring from the terminal to the Platform Bosch ECU pin 51/58. 2. Check no exposed wiring near switch that may be touching metalwork. 3. Check Platform Bosch ECU Connectors for any bent terminals or stray wiring. 4. Check all connectors / terminals for any water ingress. 5. Check operation of the Slew Acknowledgment switch. Check wiring for damage, especially abrasion or pinching.  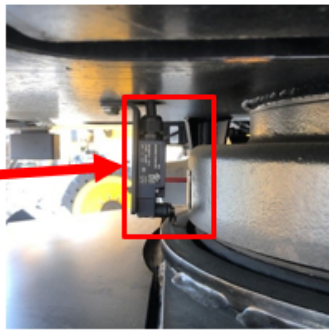 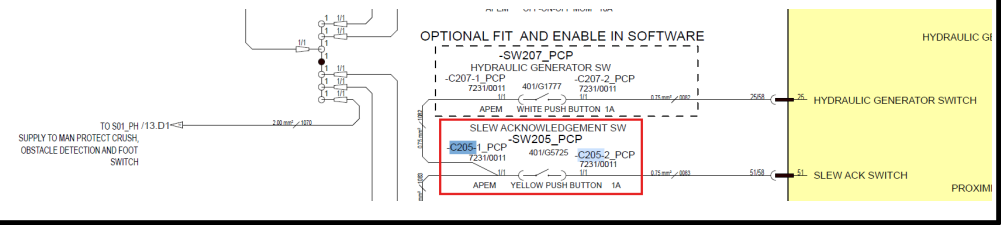

5.1.61 B1066-24

Error code:	**B1066-24**
ECU	Platform ECU
Description:	SLEW ACK SWITCH Short Circuit Stuck for >= 10 seconds
Component:	Slew Acknowledgment Button
Vehicle reaction:	Detect failure mode; Ignore input

© 2025 Enter your company name

Possible Cause:	1. A short circuit within the wiring harness 2. A short circuit within the harness connectors 3. Water damage/ingress within the harness connectors 4. Damaged component
Service Action:	1. Disconnect connectors -C205-1_PCP and -C205-2_PCP from the Slew Acknowledgment Switch. Use a multimeter to test the operation of the switch. 2. Check wire #0083 is not shorted to +10V. 3. Check all connectors for water ingress. 4. Check harness especially for abrasions and pinching. Check condition of connectors, checking especially for backed out or bent pins 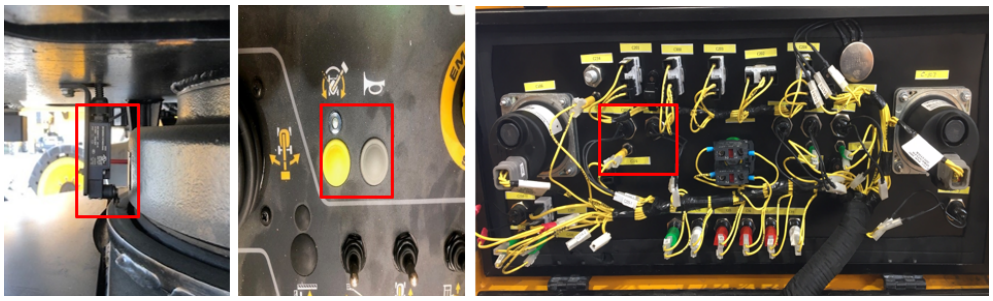 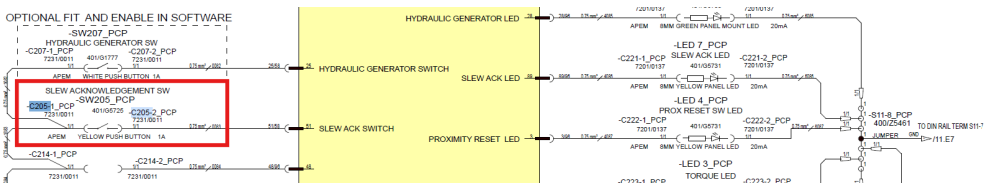

5.1.62 **B1067-17**

Error code:	**B1067-17**
ECU	Platform ECU
Description:	Potentiometer Selector Short Circuit to High (>5.5V)
Component:	Potentiometer
Vehicle reaction:	Detect failure mode - Set Potentiometer to 10%
Possible Cause:	1. A short circuit within the wiring harness 2. A short circuit within the harness connectors 3. Water damage/ingress within the harness connectors 4. Damaged component

© 2025 Enter your company name

Service Action:	1. Measure voltage at pin 2 of speed selector potentiometer. The voltage should range from 0V - 5V as the knob is turned. If voltage stays at 5V, then it is likely the potentiometer has failed. If the voltage is above 5.5V then it is likely to be a short circuit to high within the wiring from potentiometer to Platform Bosch ECU pin 39/96. 2. Check wire #4075 from Potentiometer to Platform Bosch ECU pin 39/96. 3. Check for water ingress at Platform Bosch ECU Connectors. 4. Check Wiring for any abrasions or pinching. Check function of potentiometer. Resistance value from pin 1 to pin 3 = 5000ohms. Check resistance from pin 1 to pin 2 - should change value from 0 to 5000 ohms depending on knob position.  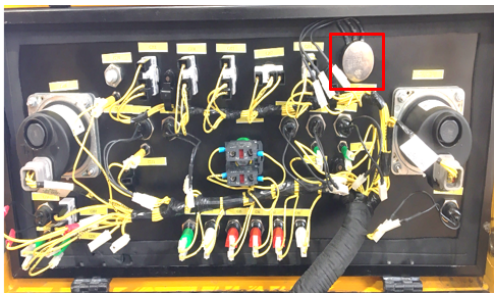 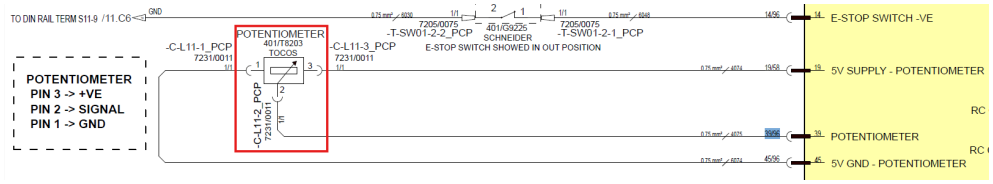

5.1.63 B1069-17

Error code:	**B1069-17**
ECU	Platform ECU
Description:	Drive JOYSTICK Short Circuit to High (>4.75V)
Component:	Drive Joystick
Vehicle reaction:	Detect failure mode - Ignore drive & Steer input (machine stops immediately)
Possible Cause:	1. A short circuit within the wiring harness 2. A short circuit within the harness connectors 3. Water damage/ingress within the harness connectors 4. Damaged component

© 2025 Enter your company name

Service Action:	1. Measure voltage between pin 1/6 (GND) and pin 4/6 (Drive) on joystick connector. Voltage should measure between 0.25 - 4.75V depending on position of Joystick. If value is above 4.75V then there is likely a short circuit to high either within the joystick or wiring back to the Platform Bosch ECU Pin 26/58. 2. Check Connectors at joystick and Platform Bosch ECU, check for bent pins or stray wires potentially causing a short circuit. 3. Check Connectors at joystick and Platform Bosch ECU for water ingress. 4. Check joystick for damage. Check all wiring for potential damage, especially abrasions and pinching.  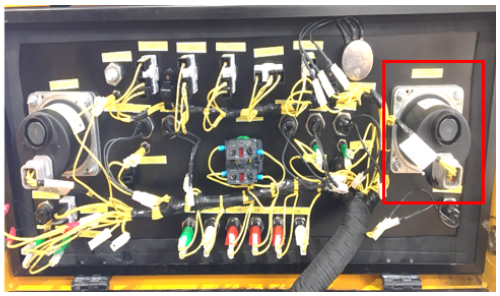 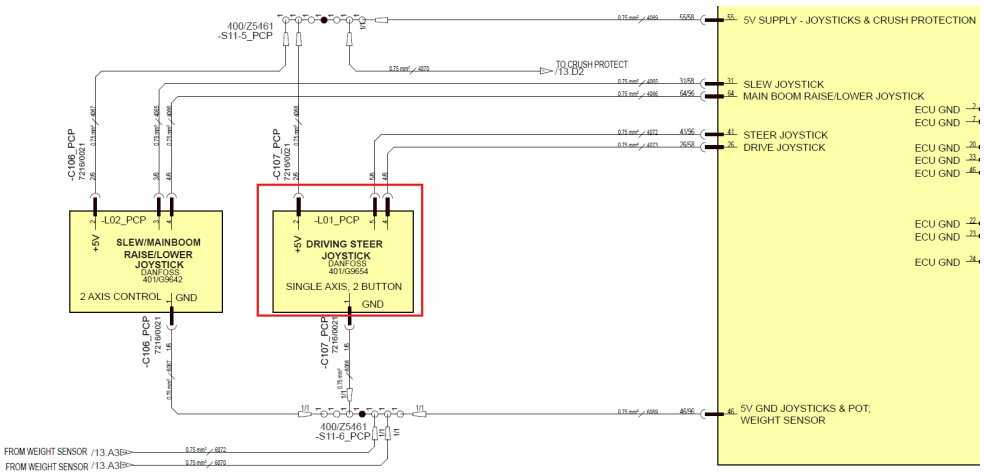

5.1.64 B1070-16

Error code:	B1070-16
ECU	Platform ECU
Description:	Drive JOYSTICK Short Circuit to Low (<0.25V) or Open Circuit
Component:	Drive Joystick

© 2025 Enter your company name

Vehicle reaction:	Detect failure mode - Ignore drive & Steer input (machine stops immediately)
Possible Cause:	1. A short circuit within the wiring harness 2. A short circuit to the chassis 3. A short circuit within the harness connectors 4. Water damage/ingress within the harness connectors 5. Damaged component 6. A damaged or broken wire within the wiring harness
Service Action:	1. Measure voltage between pin 1/6 (GND) and pin 4/6 (Drive) on joystick connector. Voltage should measure between 0.25 - 4.75V depending on position of Joystick. If value is below 0.25V then there is likely a short circuit to GND either within the joystick or wiring back to the Platform Bosch ECU Pin 26/58. 2. Check Connectors at joystick and Platform Bosch ECU, check for bent pins or stray wires potentially causing a short circuit. 3. Check Connectors at joystick and Platform Bosch ECU for water ingress. 4. Check joystick for damage. Check all wiring for potential damage, especially abrasions and pinching.



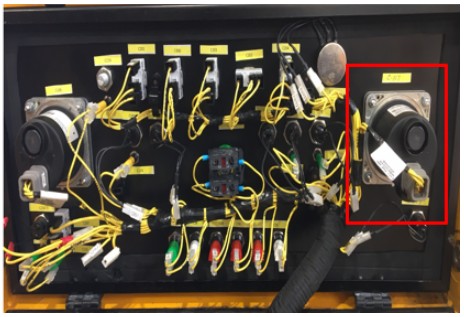

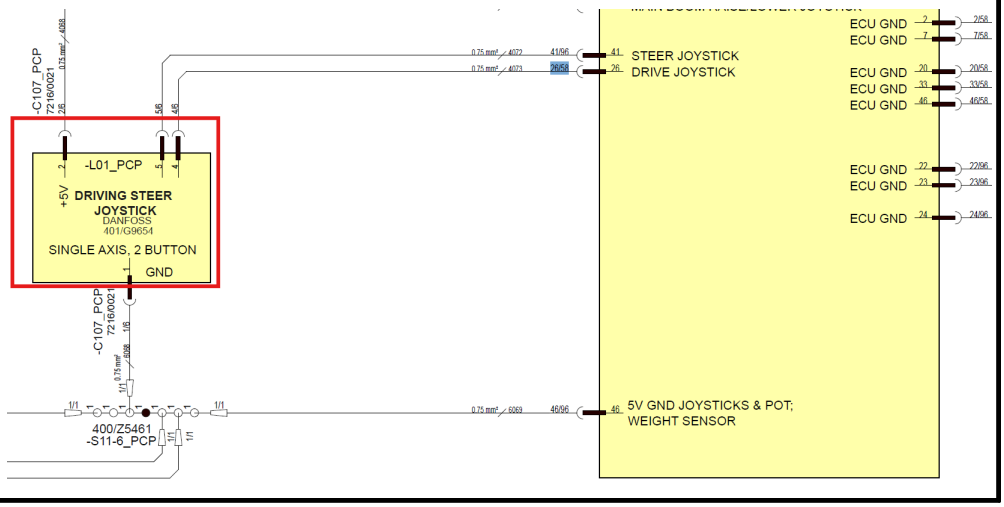

5.1.65 B1071-17

Error code:	**B1071-17**

© 2025 Enter your company name

ECU	Base ECU
Description :	PLATFORM LEVELING RAISE Switch Short Circuit to High
Component :	Platform Level Switch
Vehicle reaction:	Before operation: Ignore the input (but not o/p as it can be operated from where there is no fault) After operation (in case of STto12V): Refer to 10V System Short Circuit Fault reaction
Possible Cause:	1. A short circuit within the wiring harness 2. A short circuit within the harness connectors 3. Water damage/ingress within the harness connectors 4. Damaged component
Service Action:	1. Measure voltage at Platform Leveling Raise terminal, -C204-1_PCP. With switch not pressed, terminal voltage should be approx 2.5-3.0V. With switch pressed, voltage should rise to 10V. If Voltage at terminal is constant 10V or higher, then there is a short to high either at the switch, wiring harness or at the Platform Bosch ECU connectors. If voltage is high, remove -C204-2_PCP, if voltage now drops, then switch is faulty, else, the fault is at the harness to the Bosch ECU. 2. Check Platform Bosch ECU Connectors for bent pins or stray wires that are potentially causing a short circuit. 3. Check connectors for any sign of water ingress. 4. Check function of switch, check wiring from switch to ECU, checking for abrasions and pinching or any form of damage.  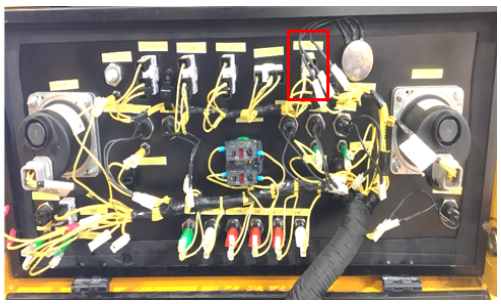 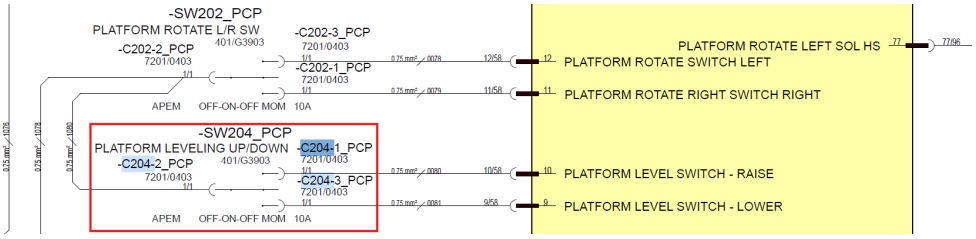

© 2025 Enter your company name

5.1.66 **B1072-17**

Error code:	**B1072-17**
ECU	Base ECU
Description :	PLATFORM LEVELING LOWER Switch Short Circuit to High
Component :	Platform Level Switch
Vehicle reaction:	Before operation: Ignore the input (but not output as it can be operated from where there is no fault) After operation: Refer to 10V System Short Circuit Fault reaction
Possible Cause:	1. A short circuit within the wiring harness 2. A short circuit within the harness connectors 3. Water damage/ingress within the harness connectors 4. Damaged component
Service Action:	1. Measure voltage at Platform Leveling Lower terminal, -C204-3_PCP. With switch not pressed, terminal voltage should be approx 2.5-3.0V. With switch pressed, voltage should rise to 10V. If Voltage at terminal is constant 10V or higher, then there is a short to high either at the switch, wiring harness or at the Platform Bosch ECU connectors. If voltage is high, remove -C204-2_PCP, if voltage now drops, then switch is faulty, else, the fault is at the harness to the Bosch ECU. 2. Check Platform Bosch ECU Connectors for bent pins or stray wires that are potentially causing a short circuit. 3. Check connectors for any sign of water ingress. 4. Check function of switch, check wiring from switch to ECU, checking for abrasions and pinching or any form of damage.  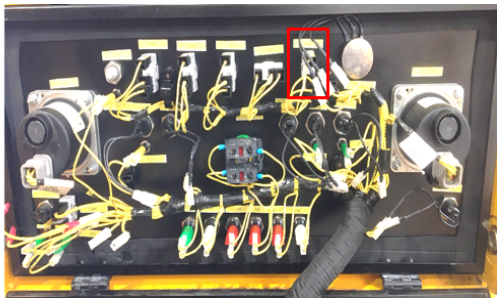

© 2025 Enter your company name

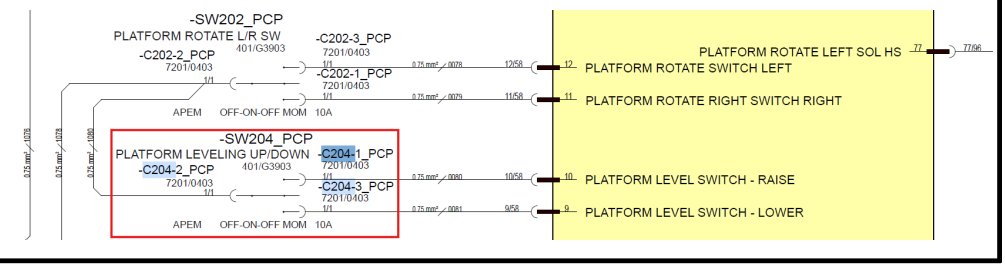

5.1.67 B1073-92

Error code:	B1073-92
ECU	Base ECU
Description:	PLATFORM LEVELING RAISE and LOWER Switches both activated (5 - 10V)
Component:	Platform Level Switch
Vehicle reaction:	Ignore the input (but not output as it can be operated from where there is no fault)
Possible Cause:	1. A short circuit within the wiring harness 2. A short circuit within the harness connectors 3. Water damage/ingress within the harness connectors 4. Damaged component
Service Action:	1. Measure voltage at Platform Leveling Raise &Lower terminals, -C204-1_PCP & -C204-3_PCP. With switch not pressed, terminal voltage should be approx 2.5-3.0V. With switch pressed, voltage should rise to 10V. If Voltage at terminal is constant 10V or higher, then there is a short to high either at the switch, wiring harness or at the Platform Bosch ECU connectors (Pins 9/58 & 10/58). If voltage is high, remove -C204-2_PCP, if voltage now drops, then switch is faulty, else, the fault is at the harness to the Bosch ECU. 2. Check Platform Bosch ECU Connectors for bent pins or stray wires that are potentially causing a short circuit. 3. Check connectors for any sign of water ingress. 4. Check function of switch, check wiring from switch to ECU, checking for abrasions and pinching or any form of damage.

© 2025 Enter your company name



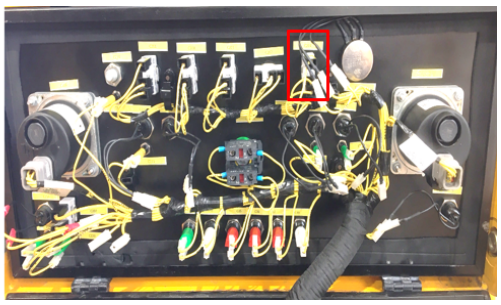

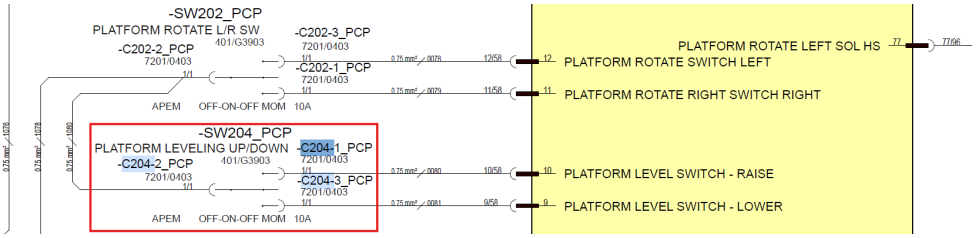

5.1.68 B1074-16

Error code:	B1074-16
ECU	Base ECU
Description:	PLATFORM LEVELING RAISE Switch Short Circuit to Low
Component:	Platform Level Switch
Vehicle reaction:	Before operation: Ignore the input (but not output as it can be operated from where there is no fault) After operation: Refer to 10V System Short Circuit Fault reaction
Possible Cause:	1. A short circuit within the wiring harness 2. A short circuit to the chassis 3. A short circuit within the harness connectors 4. Water damage/ingress within the harness connectors 5. Damaged component
Service Action:	1. Measure voltage at Platform Leveling Raise terminal, -C204-1_PCP. With switch not pressed, terminal voltage should be approx 2.5-3.0V. With switch pressed, voltage should rise to 10V. If Voltage at terminal is constantly <2.4V or lower, then there is a short to GND either at the switch, wiring harness or at the Platform Bosch ECU connectors. If voltage is Low, remove -C204-2_PCP, if voltage now rises to ~2.5V, then switch is faulty, else, the fault is at the harness to the Bosch ECU. 2. Check there are no visible defects in the wiring causing a short circuit to

© 2025 Enter your company name

	chassis / GND 3. Check Platform Bosch ECU Connectors for bent pins or stray wires that are potentially causing a short circuit. 4. Check connectors for any sign of water ingress. 5. Check function of switch, check wiring from switch to ECU, checking for abrasions and pinching or any form of damage.  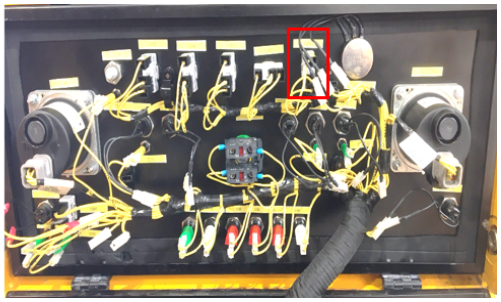 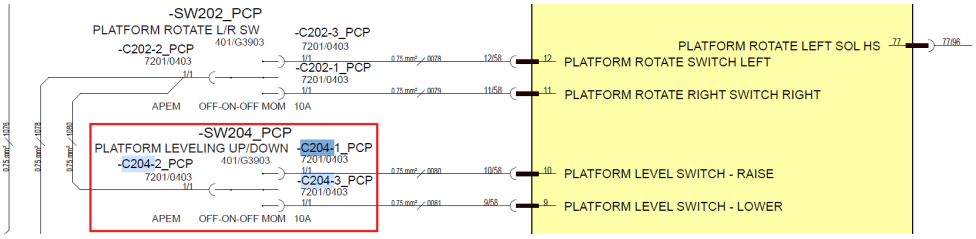

5.1.69 B1075-16

Error code:	B1075-16
ECU	Base ECU
Description:	PLATFORM LEVELING LOWER Switch Short Circuit to Low
Component:	Platform Level Switch
Vehicle reaction:	Before operation: Ignore the input (but not output as it can be operated from where there is no fault) After operation: Refer to 10V System Short Circuit Fault reaction
Possible Cause:	1. A short circuit within the wiring harness 2. A short circuit to the chassis 3. A short circuit within the harness connectors 4. Water damage/ingress within the harness connectors 5. Damaged component

© 2025 Enter your company name

Service Action:	1. Measure voltage at Platform Leveling Lower terminal, -C204-3_PCP. With switch not pressed, terminal voltage should be approx 2.5-3.0V. With switch pressed, voltage should rise to 10V. If Voltage at terminal is constantly <2.4V or lower, then there is a short to GND either at the switch, wiring harness or at the Platform Bosch ECU connectors. If voltage is Low, remove -C204-2_PCP, if voltage now rises to ~2.5V, then switch is faulty, else, the fault is at the harness to the Bosch ECU. 2. Check there are no visible defects in the wiring causing a short circuit to chassis / GND 3. Check Platform Bosch ECU Connectors for bent pins or stray wires that are potentially causing a short circuit. 4. Check connectors for any sign of water ingress. 5. Check function of switch, check wiring from switch to ECU, checking for abrasions and pinching or any form of damage.  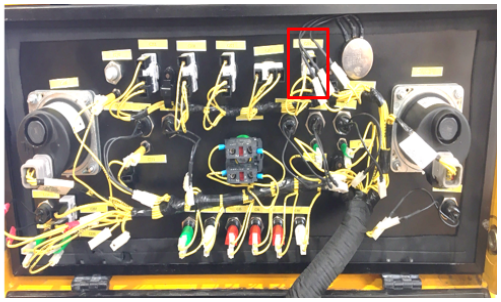 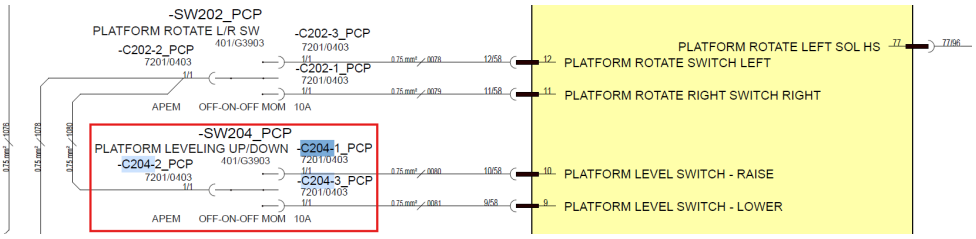

5.1.70 B1076-17

Error code:	**B1076-17**
ECU	Base ECU
Description:	MAIN BOOM RAISE OR LOWER PROPORTIONAL Solenoid Valve High Side Short Circuit to High
Component:	MAIN BOOM RAISE OR LOWER PROPORTIONAL Solenoid Valve
Vehicle reaction:	Disable main-boom raise and lower outputs

© 2025 Enter your company name

Possible Cause:	1. Poor connection 2. Break in wiring 3. Water in connector 4. Broken pin or connector 5. Damage solenoid
Service Action:	1. Check resistance of the coil 5-10 ohms 2. Check wiring from coil to ECU wire 4045,4046 & 4047A, 4047B, 4047C for cut, pinch or and damage. 3. Check ECU Pin 54/96, 78/96, 84/96 for bend or back out or any damage. 4. Check solenoid connector C05_TH and C06_TH for loose connection or any damage. 5. Check if valve is mechanically jammed 6. Turn machine ignition on/off to clear code. 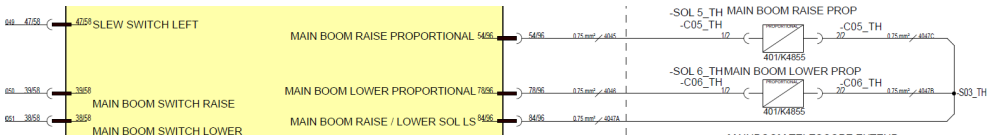

5.1.71 B1077-16

Error code:	**B1077-16**
ECU	Base ECU
Description:	MAIN BOOM RAISE OR LOWER PROPORTIONAL Solenoid Valve High Side Short Circuit to Low
Component:	MAIN BOOM RAISE OR LOWER PROPORTIONAL Solenoid Valve
Vehicle reaction:	Disable main-boom raise and lower outputs
Possible Cause:	1. Poor connection 2. Break in wiring 3. Water in connector

© 2025 Enter your company name

	4. Broken pin or connector 5. Damage solenoid
Service Action:	1. Check resistance of the coil 5-10 ohms 2. Check wiring from coil to ECU wire 4045,4046 & 4047A, 4047B, 4047C for cut, pinch or and damage. 3. Check ECU Pin 54/96, 78/96, 84/96 for bend or back out or any damage. 4. Check solenoid connector C05_TH and C06_TH for loose connection or any damage. 5. Check if valve is mechanically jammed 6. Turn machine ignition on/off to clear code. 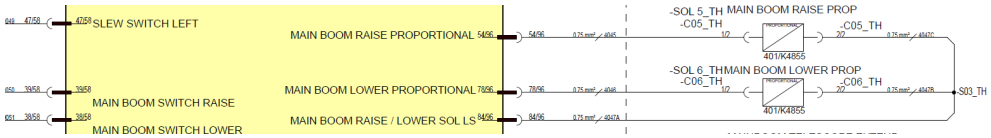

5.1.72 B1078-13

Error code:	**B1078-13**
ECU	Base ECU
Description:	MAIN BOOM RAISE OR LOWER PROPORTIONAL Solenoid Valve High Side Open Circuit
Component:	MAIN BOOM RAISE OR LOWER PROPORTIONAL Solenoid Valve
Vehicle reaction:	Disable main-boom raise and lower outputs
Possible Cause:	1. Poor connection 2. Break in wiring 3. Water in connector 4. Broken pin or connector 5. Damage solenoid

© 2025 Enter your company name

Service Action:	1. Check resistance of the coil 5-10 ohms 2. Check wiring from coil to ECU wire 4045,4046 & 4047A, 4047B, 4047C for cut, pinch or and damage. 3. Check ECU Pin 54/96, 78/96, 84/96 for bend or back out or any damage. 4. Check solenoid connector C05_TH and C06_TH for loose connection or any damage. 5. Check if valve is mechanically jammed 6. Turn machine ignition on/off to clear code.

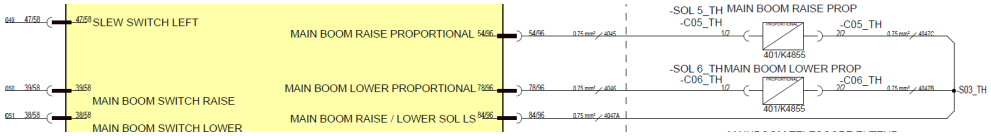

5.1.73 B1079-17

Error code:	**B1079-17**
ECU	Base ECU
Description:	MAIN BOOM RAISE OR LOWER PROPORTIONAL Solenoid Valve Fault
Component:	MAIN BOOM RAISE OR LOWER PROPORTIONAL Solenoid Valve
Vehicle reaction:	Disable main boom lower solenoid
Possible Cause:	1. Poor connection 2. Break in wiring 3. Water in connector 4. Broken pin or connector 5. Damage solenoid
Service Action:	1. Check resistance of the coil 5-10 ohms 2. Check wiring from coil to ECU wire 4045,4046 & 4047A, 4047B, 4047C for cut, pinch or and damage. 3. Check ECU Pin 54/96, 78/96, 84/96 for bend or back out or any damage.

© 2025 Enter your company name

	4. Check solenoid connector C05_TH and C06_TH for loose connection or any damage. 5. Check if valve is mechanically jammed 6. Turn machine ignition on/off to clear code. 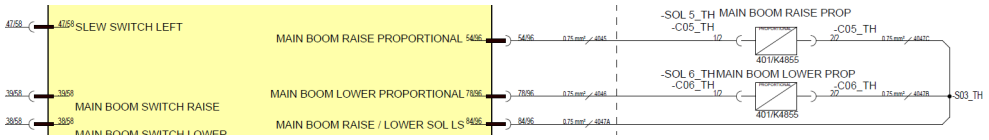

5.1.74 B1080-17

Error code:	B1080-17
ECU	Base ECU
Description:	SLEW RIGHT OR LEFT PROPORTIONAL Solenoid Valve High Side Short Circuit to High
Component:	SLEW RIGHT OR LEFT PROPORTIONAL Solenoid Valve
Vehicle reaction:	Disable slew outputs
Possible Cause:	1. Poor connection 2. Break in wiring 3. Water in connector 4. Broken pin or connector 5. Damage solenoid
Service Action:	1. Check harness connector is fully inserted into solenoid connector 2. Check resistance of coil 5-10 ohms. 3. Check no shorts to GND, check for abrasions and pinching in harness and stray wires 4. Check wiring from coil to ECU wire 4054,4055 & 4056A, 4056B, 4056C for cut, pinch or and damage. 5. Check ECU Pin 73/96, 49/96, 87/96 for bend or back out or any damage.

© 2025 Enter your company name

	6. Measure continuity at Pin 1 to GND of both connectors to determine which wire is shorted to GND. 7. Check solenoid connector C07_TH and C08_TH for loose connection or any damage. 8. Check if valve is mechanically jammed 9. Turn machine ignition on/off to clear code. 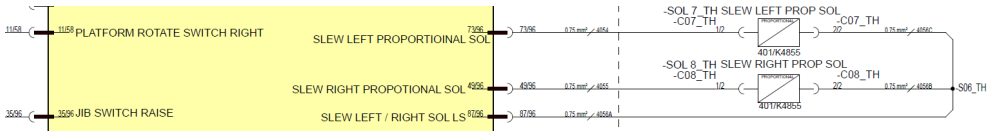

5.1.75 **B1081-16**

Error code:	**B1081-16**
ECU	Base ECU
Description :	SLEW RIGHT OR LEFT PROPORTIONAL Solenoid Valve High Side Short Circuit to Low
Component :	SLEW RIGHT OR LEFT PROPORTIONAL Solenoid Valve
Vehicle reaction:	Disable slew outputs
Possible Cause:	1. Poor connection 2. Break in wiring 3. Water in connector 4. Broken pin or connector 5. Damage solenoid
Service Action:	1. Check harness connector is fully inserted into solenoid connector 2. Check resistance of coil 5-10 ohms. 3. Check no shorts to GND, check for abrasions and pinching in harness and stray wires 4. Check wiring from coil to ECU wire 4054,4055 & 4056A, 4056B, 4056C for cut, pinch or and damage.

© 2025 Enter your company name

	5. Check ECU Pin 73/96, 49/96, 87/96 for bend or back out or any damage. 6. Measure continuity at Pin 1 to GND of both connectors to determine which wire is shorted to GND. 7. Check solenoid connector C07_TH and C08_TH for loose connection or any damage. 8. Check if valve is mechanically jammed 9. Turn machine ignition on/off to clear code. 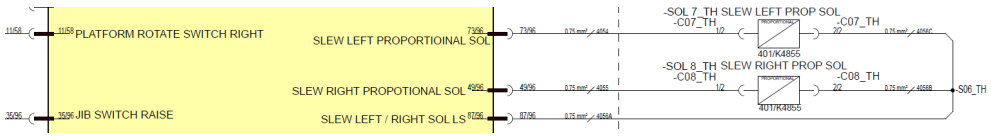

5.1.76 B1082-13

Error code:	B1082-13
ECU	Base ECU
Description:	SLEW RIGHT OR LEFT PROPORTIONAL Solenoid Valve High Side Open Circuit
Component:	SLEW RIGHT OR LEFT PROPORTIONAL Solenoid Valve
Vehicle reaction:	Disable the slew outputs
Possible Cause:	1. Poor or loose connection 2. Break in wiring 3. Water in connector 4. Broken pin or connector 5. Faulty or Damage solenoid
Service Action:	1. Check resistance of coil 5-10 ohms 2. Check wiring from coil to ECU wire 4054,4055 & 4056A, 4056B, 4056C for cut, pinch or and damage. 3. Check ECU Pin 73/96, 49/96, 87/96 for bend or back out or any damage.

© 2025 Enter your company name

	4. Check solenoid connector C07_TH and C08_TH for loose connection or any damage. 5. Check if valve is mechanically jammed 6. Turn machine ignition on/off to clear code. 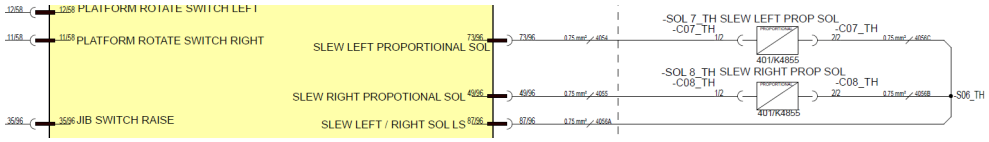

5.1.77 **B1083-17**

Error code:	**B1083-17**
ECU	Base ECU
Description:	SLEW RIGHT OR LEFT PROPORTIONAL Solenoid Valve Fault
Component:	SLEW RIGHT OR LEFT PROPORTIONAL Solenoid Valve
Vehicle reaction:	Disable slew outputs
Possible Cause:	1. Poor connection 2. Break in wiring 3. Water in connector 4. Broken pin or connector 5. Damage solenoid
Service Action:	1. Check harness connector is fully inserted into solenoid connector 2. Check resistance of coil 5-10 ohms 3. Check wiring from coil to ECU wire 4054,4055 & 4056A, 4056B, 4056C for cut, pinch or and damage. 4. Check ECU Pin 73/96, 49/96, 87/96 for bend or back out or any damage. 5. Check solenoid connector C07_TH and C08_TH for loose connection or any damage. 6. Check if valve is mechanically jammed

© 2025 Enter your company name

	7. Turn machine ignition on/off to clear code. 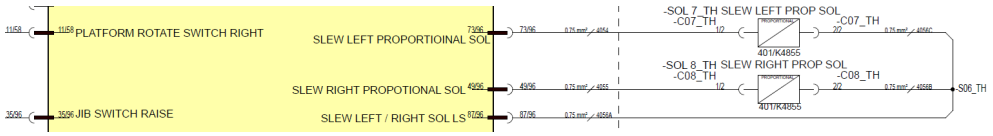

5.1.78 **B1084-17**

Error code:	**B1084-17**
ECU	Base ECU
Description :	MAIN BOOM EXTEND OR RETRACT DIRECTIONAL Solenoid Valve High Side Short Circuit to High OR Short Circuit to Low
Component :	MAIN BOOM EXTEND OR RETRACT DIRECTIONAL Solenoid Valve
Vehicle reaction:	Detect failure mode with Safout method - Switch this output to off Before Ignition ON, POST Fail (stuck in startup logic) and Generic output fault
Possible Cause:	1. A short circuit within the wiring harness 2. A short circuit within the harness connectors 3. Water damage/ingress within the harness connectors 4. Damaged component
Service Action:	1. Check wiring between ECU and solenoid for voltage greater than 10.5 volts. 2. check for continuity to ground. 3. Check wiring from coil to ECU wire 4048,4049 & 4050A, 4050B, 4050C for cut, pinch or and damage. 4. Check ECU Pin 73/96, 49/96, 87/96 for bend or back out or any damage. 5. Check solenoid connector C04_TH and C03_TH for loose connection or any damage. 6. Check if valve is mechanically jammed 2. Turn machine ignition on/off to clear code. 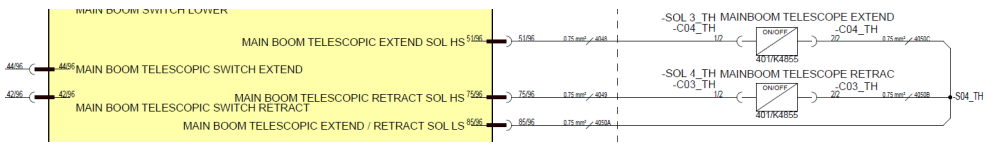

© 2025 Enter your company name

5.1.79 B1086-13

Error code:	B1086-13
ECU	Base ECU
Description :	MAIN BOOM EXTEND OR RETRACT DIRECTIONAL Solenoid Valve High Side & Low Side Open Circuit
Component :	MAIN BOOM EXTEND OR RETRACT DIRECTIONAL Solenoid Valve
Vehicle reaction:	Disable main boom outputs
Possible Cause:	1. A short circuit within the wiring harness 2. A short circuit within the harness connectors 3. Water damage/ingress within the harness connectors 4. Damaged component. 5. Break in wiring, poor connection at solenoids
Service Action:	1. Check wiring between ECU and solenoid for voltage greater than 10.5 volts. 2. check for continuity to ground. 3. Check wiring from coil to ECU wire 4048,4049 & 4050A, 4050B, 4050C for cut, pinch or and damage. 4. Check ECU Pin 73/96, 49/96, 87/96 for bend or back out or any damage. 5. Check solenoid connector C04_TH and C03_TH for loose connection or any damage. 6. Check if valve is mechanically jammed 7. Turn machine ignition on/off to clear code.

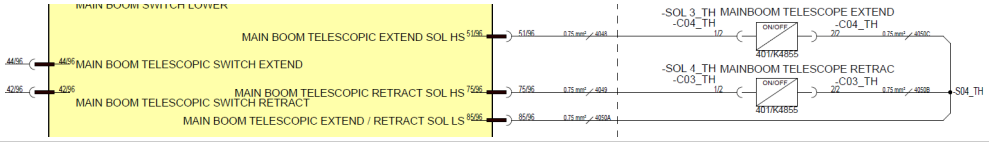

5.1.80 B1087-17

Error code:	B1087-17
ECU	Base ECU

Description:	MAIN BOOM EXTEND OR RETRACT DIRECTIONAL Solenoid Valve Fault
Component:	MAIN BOOM EXTEND OR RETRACT DIRECTIONAL Solenoid Valve
Vehicle reaction:	Detect failure mode with Safout method - Switch Main Boom output to off (High Side & Low Side Short Circuit to Low or Open Circuit)
Possible Cause:	1. Poor or loose connection 2. Break in wiring 3. Water in connector 4. Broken pin or connector 5. Faulty or Damage solenoid
Service Action:	1. Check wiring between ECU and solenoid for voltage greater than 10.5 volts. 2. Check wiring from coil to ECU wire 4048,4049 & 4050A, 4050B, 4050C for cut, pinch or and damage. 3. Check ECU Pin 51/96, 75/96, 85/96 for bend or back out or any damage. 4. Check solenoid connector C04_TH and C03_TH for loose connection or any damage. 5. Check if valve is mechanically jammed 6. Turn ignition on off to clear code 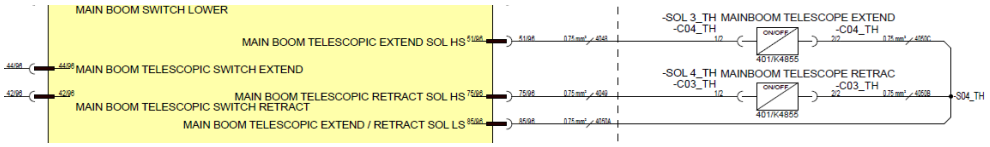

5.1.81 B1088-17

Error code:	**B1088-17**
ECU	Base ECU
Description:	STEER RIGHT OR LEFT DIRECTIONAL Solenoid Valve High Side Short Circuit to High

© 2025 Enter your company name

Component :	STEER RIGHT OR LEFT DIRECTIONAL Solenoid Valve
Vehicle reaction:	Detect failure mode with Safout method - Switch Steer output to off
Possible Cause:	1. Poor or loose connection 2. Break in wiring 3. Water in connector 4. Broken pin or connector 5. Faulty or Damage solenoid
Service Action:	1.Check coil resistance 5-10 ohms 2. Check wiring from coil to ECU wire 4051,4052 & 4053A, 4053B, 4053C for cut, pinch or and damage. 3. Check ECU Pin 74/96, 50/96, 80/96 for bend or back out or any damage. 4. Check solenoid connector C09_TH and C10_TH for loose connection or any damage. 5. Check if valve is mechanically jammed. 6 Turn ignition on off to clear code. 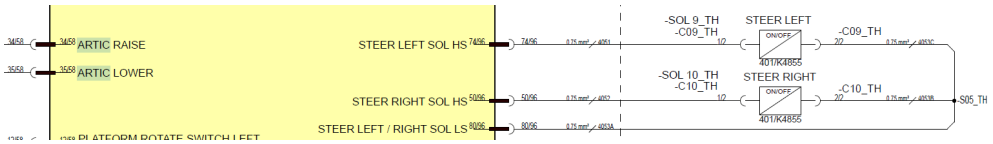

5.1.82 B1089-16

Error code:	**B1089-16**
ECU	Base ECU
Description :	STEER RIGHT OR LEFT DIRECTIONAL Solenoid Valve High Side Short Circuit to Low
Component :	STEER RIGHT OR LEFT DIRECTIONAL Solenoid Valve

© 2025 Enter your company name

Vehicle reaction:	Detect failure mode with Safout method - Switch Steer output to off
Possible Cause:	1. Poor or loose connection 2. Break in wiring 3. Water in connector 4. Broken pin or connector 5. Faulty or Damage solenoid
Service Action:	1.Check coil resistance 5-10 ohms 2. Check wiring from coil to ECU wire 4051,4052 & 4053A, 4053B, 4053C for cut, pinch or and damage. 3. Check ECU Pin 74/96, 50/96, 80/96 for bend or back out or any damage. 4. Check solenoid connector C09_TH and C10_TH for loose connection or any damage. 5. Check if valve is mechanically jammed. 6 Turn ignition on off to clear code. 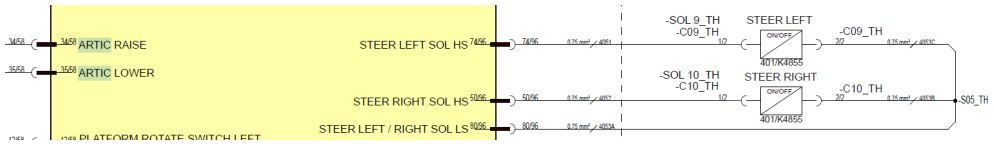

5.1.83 B1090-13

Error code:	**B1090-13**
ECU	Base ECU
Description:	STEER RIGHT OR LEFT DIRECTIONAL Solenoid Valve High Side & Low Side Open Circuit
Component:	STEER RIGHT OR LEFT DIRECTIONAL Solenoid Valve
Vehicle reaction:	Detect failure mode with Safout method - Switch Steer output to off

© 2025 Enter your company name

Possible Cause:	1. Poor or loose connection 2. Break in wiring 3. Water in connector 4. Broken pin or connector 5. Faulty or Damage solenoid
Service Action:	1.Check coil resistance 5-10 ohms 2. Check wiring from coil to ECU wire 4051,4052 & 4053A, 4053B, 4053C for cut, pinch or and damage. 3. Check ECU Pin 74/96, 50/96, 80/96 for bend or back out or any damage. 4. Check solenoid connector C09_TH and C10_TH for loose connection or any damage. 5. Check if valve is mechanically jammed. 6 Turn ignition on off to clear code. 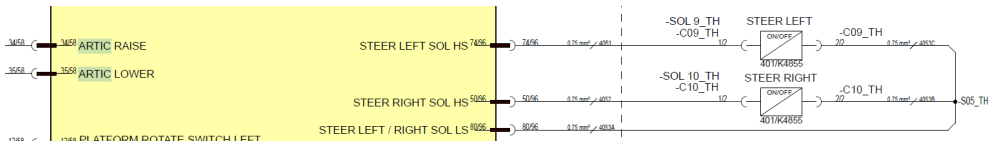

5.1.84 B1091-17

Error code:	**B1091-17**
ECU	Base ECU
Description:	STEER RIGHT OR LEFT DIRECTIONAL Solenoid Valve Fault.
Component:	STEER RIGHT OR LEFT DIRECTIONAL Solenoid Valve
Vehicle reaction:	Detect failure mode with Safout method - Switch Steer output to off
Possible Cause:	1. Poor or loose connection 2. Break in wiring

© 2025 Enter your company name

	3. Water in connector 4. Broken pin or connector 5. Faulty or Damage solenoid
Service Action:	1.Check coil resistance 5-10 ohms 2. Check wiring from coil to ECU wire 4051,4052 & 4053A, 4053B, 4053C for cut, pinch or and damage. 3. Check ECU Pin 74/96, 50/96, 80/96 for bend or back out or any damage. 4. Check solenoid connector C09_TH and C10_TH for loose connection or any damage. 5. Check if valve is mechanically jammed. 6 Turn ignition on off to clear code. 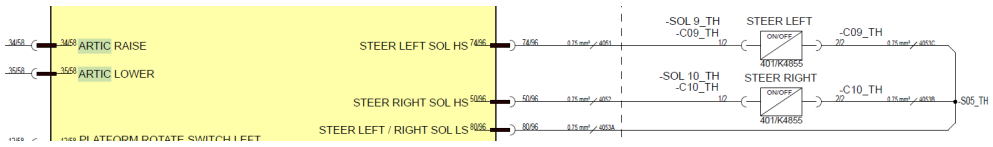

5.1.85 B1092-17

Error code:	**B1092-17**
ECU	Base ECU
Description:	ARTICULATED BOOM RAISE OR LOWER DIRECTIONAL Solenoid Valve High Side Short Circuit to High
Component:	ARTICULATED BOOM RAISE OR LOWER DIRECTIONAL Solenoid Valve
Vehicle reaction:	Disable articulated boom outputs
Possible Cause:	1. Poor or loose connection 2. Break in wiring 3. Water in connector

© 2025 Enter your company name

	4. Broken pin or connector 5. Faulty or Damage solenoid
Service Action:	1. Check coil resistance 5-10 ohms 2. Check wiring from coil to ECU wire 4042,4043 & 4044A, 4044B, 4044C for cut, pinch or and damage. 3. Check ECU Pin 53/96, 77/96, 88/96 for bend or back out or any damage. 4. Check solenoid connector C01_TH and C02_TH for loose connection or any damage. 5. Check if valve is mechanically jammed 6.Turn ignition on off to clear code 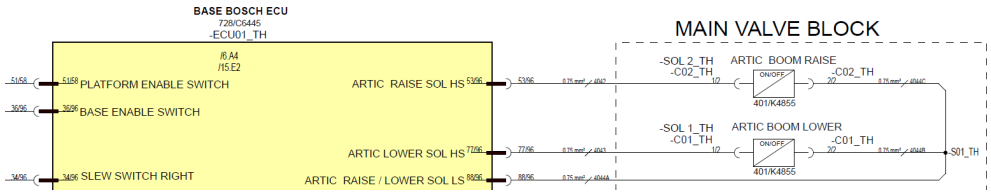

5.1.86 **B1093-16**

Error code:	**B1093-16**
ECU	Base ECU
Description :	ARTICULATED BOOM RAISE OR LOWER DIRECTIONAL Solenoid Valve High Side Short Circuit to Low
Component :	ARTICULATED BOOM RAISE OR LOWER DIRECTIONAL Solenoid Valve
Vehicle reaction:	Disable articulated boom outputs
Possible Cause:	1. Poor or loose connection 2. Break in wiring 3. Water in connector 4. Broken pin or connector 5. Faulty or Damage solenoid

© 2025 Enter your company name

Service Action:	1. Check coil resistance 5-10 ohms 2. Check wiring from coil to ECU wire 4042,4043 & 4044A, 4044B, 4044C for cut, pinch or and damage. 3. Check ECU Pin 53/96, 77/96, 88/96 for bend or back out or any damage. 4. Check solenoid connector C01_TH and C02_TH for loose connection or any damage. 5. Check if valve is mechanically jammed 6.Turn ignition on off to clear code 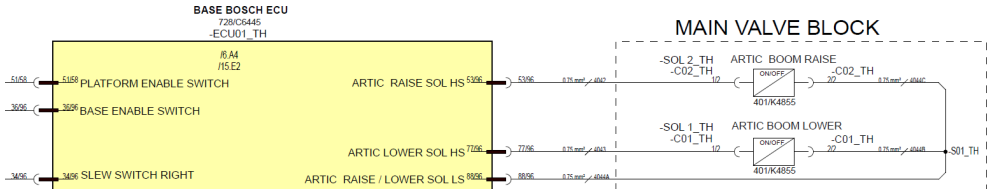

5.1.87 **B1094-13**

Error code:	**B1094-13**
ECU	Base ECU
Description :	ARTICULATED BOOM RAISE OR LOWER DIRECTIONAL Solenoid Valve High Side & Low Side Open Circuit
Component :	ARTICULATED BOOM RAISE OR LOWER DIRECTIONAL Solenoid Valve
Vehicle reaction:	Disable articulated boom outputs
Possible Cause:	1. Poor or loose connection 2. Break in wiring 3. Water in connector 4. Broken pin or connector 5. Faulty or Damage solenoid
Service Action:	1. Check coil resistance 5-10 ohms

© 2025 Enter your company name

	2. Check wiring from coil to ECU wire 4042,4043 & 4044A, 4044B, 4044C for cut, pinch or and damage. 3. Check ECU Pin 53/96, 77/96, 88/96 for bend or back out or any damage. 4. Check solenoid connector C01_TH and C02_TH for loose connection or any damage. 5. Check if valve is mechanically jammed 6.Turn ignition on off to clear code 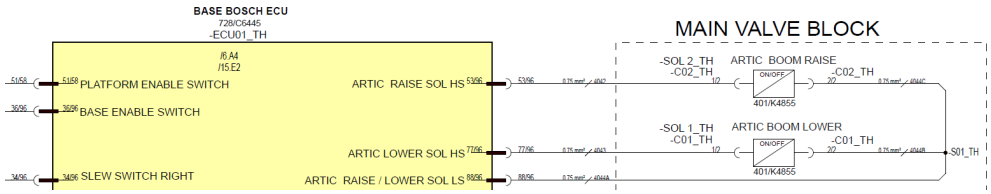

5.1.88 B1095-92

Error code:	B1095-17
ECU	Base ECU
Description :	ARTICULATED BOOM RAISE OR LOWER DIRECTIONAL Solenoid Valve Fault
Component :	ARTICULATED BOOM RAISE OR LOWER DIRECTIONAL Solenoid Valve
Vehicle reaction:	Disable articulated boom outputs
Possible Cause:	1. Poor or loose connection 2. Break in wiring 3. Water in connector 4. Broken pin or connector 5. Faulty or Damage solenoid
Service Action:	1. Check coil resistance 5-10 ohms 2. Check wiring from coil to ECU wire 4042,4043 & 4044A, 4044B, 4044C for cut, pinch or and damage.

© 2025 Enter your company name

	3. Check ECU Pin 53/96, 77/96, 88/96 for bend or back out or any damage. 4. Check solenoid connector C01_TH and C02_TH for loose connection or any damage. 5. Check if valve is mechanically jammed 6.Turn ignition on off to clear code 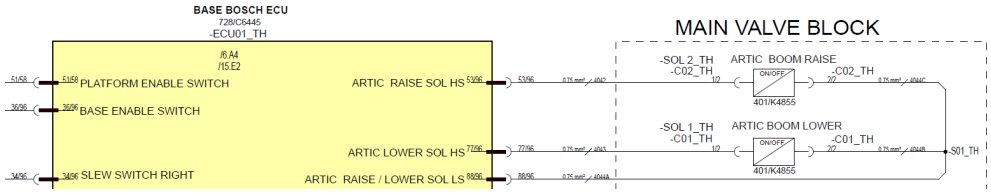

5.1.89 B1096-17

Error code:	B1096-17
ECU	Base ECU
Description:	ARTICULATED BOOM RAISE Switch Short Circuit to High
Component:	ARTICULATED BOOM RAISE Switch
Vehicle reaction:	Input from base control station will be disabled, output can still be operated from platform control station.
Possible Cause:	1. A short circuit within the wiring harness 2. A short circuit to the chassis 3. A short circuit within the harness connectors 4. Water damage/ingress within the harness connectors 5. Damaged component
Service Action:	1. Disconnect connector -C115-2_TCP from the rear of the ARTICULATED BOOM RAISE Switch on the Base Control Panel. Measure resistance from Terminal to GND. If a short exists, check wire #0054 to Base Bosch ECU pin 34/58. 2. Check Wire #0054 is not shorted to GND / Chassis. Check for abrasions and pinching. 3. Check condition of pins in Platform Bosch ECU. Check for Bent pins, debris or stray wires causing a short. 4. Check for water ingress in the Platform Bosch ECU Connectors. 5. Check Switch for damage or shorting to connector -C115-1_TCP

© 2025 Enter your company name

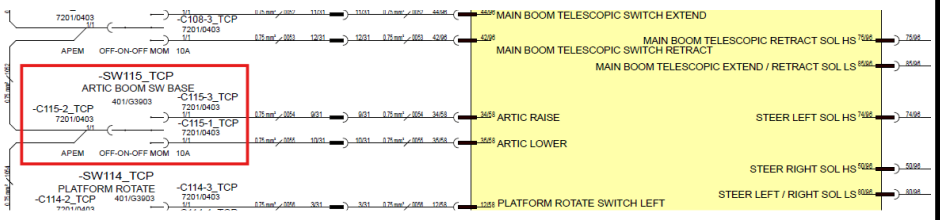

5.1.90 B1097-17

Error code:	B1097-17
ECU	Base ECU
Description:	ARTICULATED BOOM LOWER Switch Short Circuit to High
Component:	ARTICULATED BOOM LOWER Switch
Vehicle reaction:	Input from base control station will be disabled, output can still be operated from platform control station.
Possible Cause:	1. A short circuit within the wiring harness 2. A short circuit to the chassis 3. A short circuit within the harness connectors 4. Water damage/ingress within the harness connectors 5. Damaged component
Service Action:	1. Disconnect connector -C115-2_TCP from the rear of the ARTICULATED BOOM RAISE Switch on the Base Control Panel. Measure resistance from Terminal to GND. If a short exists, check wire #0055 to Base Bosch ECU pin 35/58. 2. Check Wire #0055 is not shorted to GND / Chassis. Check for abrasions and pinching. 3. Check condition of pins in Platform Bosch ECU. Check for Bent pins, debris or stray wires causing a short. 4. Check for water ingress in the Platform Bosch ECU Connectors. 5. Check Switch for damage or shorting to connector -C115-3_TCP

© 2025 Enter your company name

	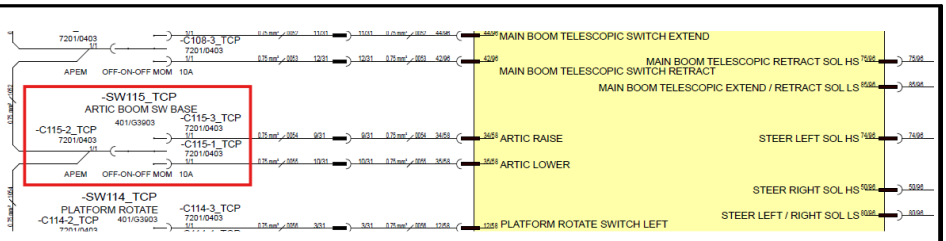

5.1.91 B1098-92

Error code:	B1098-92
ECU	Base ECU
Description:	ARTICULATED BOOM RAISE & LOWER Switches both activated (5 - 10V)
Component:	ARTICULATED BOOM RAISE & LOWER Switches
Vehicle reaction:	Input from base control station will be disabled, output can still be operated from platform control station.
Possible Cause:	1. A short circuit within the wiring harness 2. A short circuit to the chassis 3. A short circuit within the harness connectors 4. Water damage/ingress within the harness connectors 5. Damaged component
Service Action:	1. Disconnect connector -C115-2_TCP from the rear of the ARTICULATED BOOM RAISE Switch on the Base Control Panel. Measure resistance from Terminal to GND. If a short exists, check wire #0054 to Base Bosch ECU pin 34/58. 2. Check Wire #0054 is not shorted to GND / Chassis. Check for abrasions and pinching. 3. Disconnect connector -C115-2_TCP from the rear of the ARTICULATED BOOM RAISE Switch on the Base Control Panel. Measure resistance from Terminal to GND. If a short exists, check wire #0055 to Base Bosch ECU pin 35/58. 4. Check Wire #0055 is not shorted to GND / Chassis. Check for abrasions and pinching. 5. Check condition of pins in Base Bosch ECU. Check for Bent pins, debris or stray wires causing a short.

© 2025 Enter your company name

	6. Check for water ingress in the Base Bosch ECU Connectors. 7. Check Switch for damage or shorting to connector -C115-1_TCP 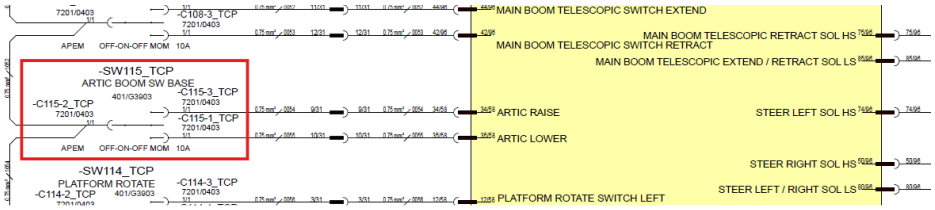

5.1.92 B1099-16

Error code:	B1099-16
ECU	Base ECU
Description:	ARTICULATED BOOM RAISE Switch Short Circuit to Low
Component:	ARTICULATED BOOM RAISE Switch
Vehicle reaction:	Input from base control station will be disabled, output can still be operated from platform control station.
Possible Cause:	1. A short circuit within the wiring harness 2. A short circuit to the chassis 3. A short circuit within the harness connectors 4. Water damage/ingress within the harness connectors 5. Damaged component
Service Action:	1. Disconnect connector -C115-2_TCP from the rear of the ARTICULATED BOOM RAISE Switch on the Base Control Panel. Measure resistance from Terminal to GND. If a short exists, check wire #0054 to Base Bosch ECU pin 34/58. 2. Check Wire #0054 is not shorted to GND / Chassis. Check for abrasions and pinching. 3. Check condition of pins in Base Bosch ECU. Check for Bent pins, debris or stray wires causing a short. 4. Check for water ingress in the Base Bosch ECU Connectors. 5. Check Switch for damage or shorting to connector -C115-1_TCP

© 2025 Enter your company name

	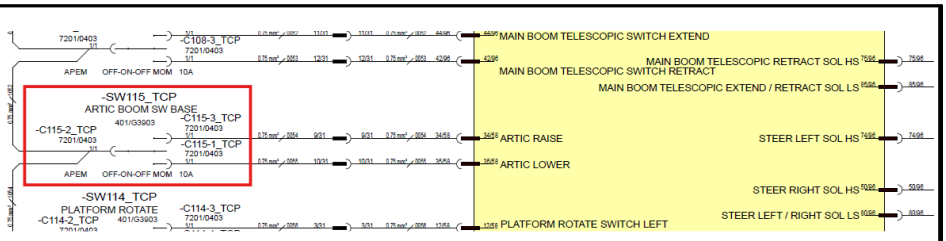

5.1.93 B1100-16

Error code:	**B1100-16**
ECU	Base ECU
Description:	ARTICULATED BOOM LOWER Switch Short Circuit to Low
Component:	ARTICULATED BOOM LOWER Switch
Vehicle reaction:	Input from base control station will be disabled, output can still be operated from platform control station.
Possible Cause:	1. A short circuit within the wiring harness 2. A short circuit to the chassis 3. A short circuit within the harness connectors 4. Water damage/ingress within the harness connectors 5. Damaged component
Service Action:	1. Disconnect connector -C115-2_TCP from the rear of the ARTICULATED BOOM RAISE Switch on the Base Control Panel. Measure resistance from Terminal to GND. If a short exists, check wire #0055 to Base Bosch ECU pin 35/58. 2. Check Wire #0055 is not shorted to GND / Chassis. Check for abrasions and pinching. 3. Check condition of pins in Base Bosch ECU. Check for Bent pins, debris or stray wires causing a short. 4. Check for water ingress in the Base Bosch ECU Connectors. 5. Check Switch for damage or shorting to connector -C115-3_TCP

© 2025 Enter your company name

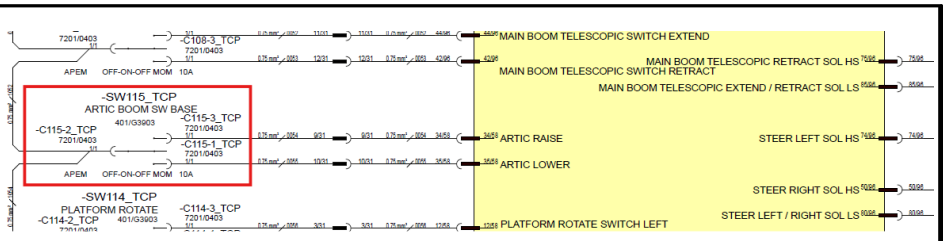

5.1.94 B1101-17

Error code:	B1101-17
ECU	Base ECU
Description:	MAIN BOOM EXTEND Switch Short Circuit to High
Component:	Telescopic Switch
Vehicle reaction:	Before operation: Ignore the input (but not output as it can be operated from where there is no fault) After operation: Refer to 10V System Short Circuit Fault reaction
Possible Cause:	1. A short circuit within the wiring harness 2. A short circuit within the harness connectors 3. Water damage/ingress within the harness connectors 4. Damaged component
Service Action:	1. Measure voltage at Base Main Boom Telescope Extend terminal, -C108-1_TCP. With switch not pressed, terminal voltage should be approx 2.5-3.0V. With switch pressed, voltage should rise to 10V. If Voltage at terminal is constant 10V or higher, then there is a short to high either at the switch, wiring harness or at the Base Bosch ECU connectors. If voltage is high, remove -C108-2_TCP, if voltage now drops, then switch is faulty, else, the fault is at the harness to the Bosch ECU. 2. Check Base Bosch ECU Connectors for bent pins or stray wires that are potentially causing a short circuit. 3. Check connectors for any sign of water ingress. 4. Check function of switch, check wiring from switch to ECU, checking for abrasions and pinching or any form of damage.

© 2025 Enter your company name



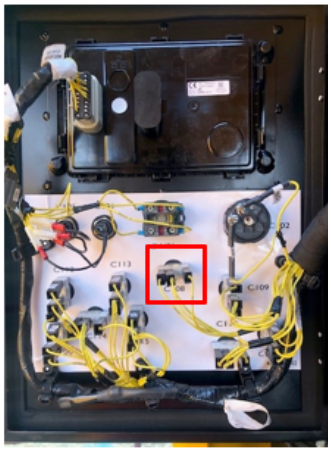

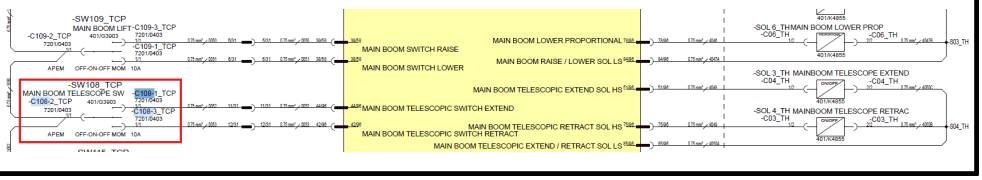

5.1.95 B1102-17

Error code:	B1102-17
ECU	Base ECU
Description:	MAIN BOOM RETRACT Switch Short Circuit to High
Component:	Telescopic Switch
Vehicle reaction:	Before operation: Ignore the input (but not output as it can be operated from where there is no fault) After operation: Refer to 10V System Short Circuit Fault reaction
Possible Cause:	1. A short circuit within the wiring harness 2. A short circuit within the harness connectors 3. Water damage/ingress within the harness connectors 4. Damaged component
Service Action:	1. Measure voltage at Base Main Boom Telescope Retract terminal, -C108-3_TCP. With switch not pressed, terminal voltage should be approx 2.5-3.0V. With switch pressed, voltage should rise to 10V. If Voltage at terminal is constant 10V or higher, then there is a short to high either at the switch, wiring harness or at the Base Bosch ECU connectors. If voltage is high,

© 2025 Enter your company name

	remove -C108-2_TCP, if voltage now drops, then switch is faulty, else, the fault is at the harness to the Bosch ECU. 2. Check Base Base Bosch ECU Connectors for bent pins or stray wires that are potentially causing a short circuit. 3. Check connectors for any sign of water ingress. 4. Check function of switch, check wiring from switch to ECU, checking for abrasions and pinching or any form of damage.  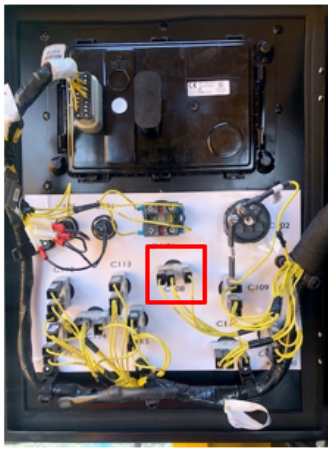 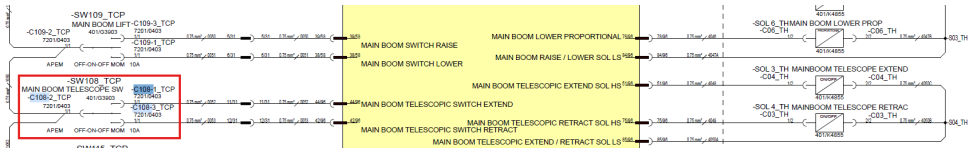

5.1.96 **B1103-92**

Error code:	**B1103-92**
ECU	Base ECU
Description:	MAIN BOOM EXTEND & RETRACT Switches both activated (5 - 10V)
Component:	Telescopic Switch
Vehicle reaction:	Ignore the input (but not output as it can be operated from where there is no fault)
Possible Cause:	1. A short circuit within the wiring harness 2. A short circuit within the harness connectors 3. Water damage/ingress within the harness connectors 4. Damaged component

© 2025 Enter your company name

Service Action:	1. Measure voltage at Base Main Boom Telescope Extend/Retract &Lower terminals, -C108-1_TCP & -C108-3_TCP. With switch not pressed, terminal voltage should be approx 2.5-3.0V. With switch pressed, voltage should rise to 10V. If Voltage at terminal is constant 10V or higher, then there is a short to high either at the switch, wiring harness or at the Base Bosch ECU connectors (Pins 9/58 & 10/58). If voltage is high, remove -C108-2_TCP, if voltage now drops, then switch is faulty, else, the fault is at the harness to the Bosch ECU. 2. Check Base Base Bosch ECU Connectors for bent pins or stray wires that are potentially causing a short circuit. 3. Check connectors for any sign of water ingress. 4. Check function of switch, check wiring from switch to ECU, checking for abrasions and pinching or any form of damage.  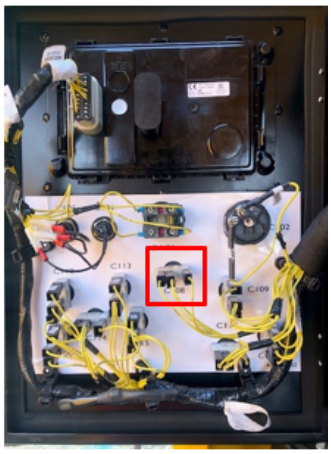 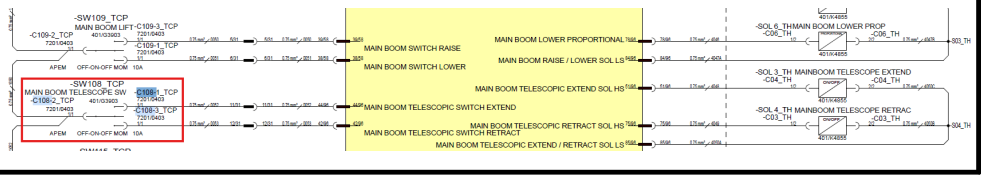

5.1.97 B1104-16

Error code:	**B1104-16**
ECU	Base ECU
Description:	MAIN BOOM EXTEND Switch Short Circuit to Low
Component:	Telescopic Switch

© 2025 Enter your company name

Vehicle reaction:	Before operation: Ignore the input (but not output as it can be operated from where there is no fault) After operation: Refer to 10V System Short Circuit Fault reaction
Possible Cause:	1. A short circuit within the wiring harness 2. A short circuit to the chassis 3. A short circuit within the harness connectors 4. Water damage/ingress within the harness connectors 5. Damaged component
Service Action:	1. Measure voltage at Base Main Boom Telescope Extend terminal, -C108-1_TCP. With switch not pressed, terminal voltage should be approx 2.5-3.0V. With switch pressed, voltage should rise to 10V. If Voltage at terminal is constantly <2.4V or lower, then there is a short to GND either at the switch, wiring harness or at the Base Bosch ECU connectors. If voltage is Low, remove -C108-2_TCP, if voltage now rises to ~2.5V, then switch is faulty, else, the fault is at the harness to the Bosch ECU. 2. Check there are no visible defects in the wiring causing a short circuit to chassis / GND 3. Check Base Base Bosch ECU Connectors for bent pins or stray wires that are potentially causing a short circuit. 4. Check connectors for any sign of water ingress. 5. Check function of switch, check wiring from switch to ECU, checking for abrasions and pinching or any form of damage.  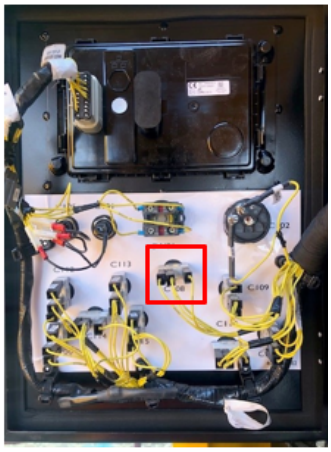 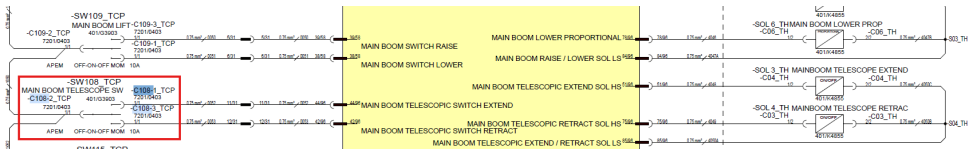

5.1.98 **B1105-16**

Error code:	**B1105-16**

© 2025 Enter your company name

ECU	Base ECU
Description :	MAIN BOOM RETRACT Switch Short Circuit to Low
Component :	Telescopic Switch
Vehicle reaction:	Before operation: Ignore the input (but not output as it can be operated from where there is no fault) After operation: Refer to 10V System Short Circuit Fault reaction
Possible Cause:	1. A short circuit within the wiring harness 2. A short circuit to the chassis 3. A short circuit within the harness connectors 4. Water damage/ingress within the harness connectors 5. Damaged component
Service Action:	1. Measure voltage at Base Main Boom Telescope Retract terminal, -C108-3_TCP. With switch not pressed, terminal voltage should be approx 2.5-3.0V. With switch pressed, voltage should rise to 10V. If Voltage at terminal is constantly <2.4V or lower, then there is a short to GND either at the switch, wiring harness or at the Base Bosch ECU connectors. If voltage is Low, remove -C108-2_TCP, if voltage now rises to ~2.5V, then switch is faulty, else, the fault is at the harness to the Bosch ECU. 2. Check there are no visible defects in the wiring causing a short circuit to chassis / GND 3. Check Base Base Bosch ECU Connectors for bent pins or stray wires that are potentially causing a short circuit. 4. Check connectors for any sign of water ingress. 5. Check function of switch, check wiring from switch to ECU, checking for abrasions and pinching or any form of damage.  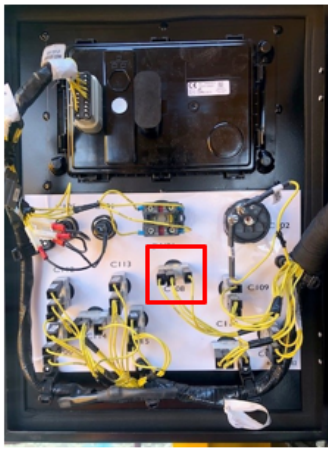

© 2025 Enter your company name

	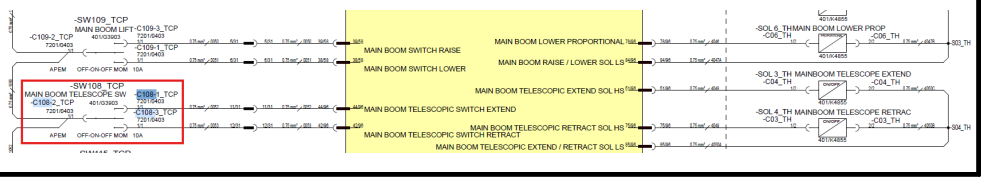

5.1.99 B1106-17

Error code:	B1106-17
ECU	Base ECU
Description:	PLATFORM ROTATE RIGHT Switch Short Circuit to High
Component:	Platform Rotate Switch
Vehicle reaction:	Before operation: Ignore the input (but not output as it can be operated from where there is no fault) After operation: Refer to 10V System Short Circuit Fault reaction
Possible Cause:	1. A short circuit within the wiring harness 2. A short circuit within the harness connectors 3. Water damage/ingress within the harness connectors 4. Damaged component
Service Action:	1. Measure voltage at Base Platform Rotate terminal, -C114-1_TCP. With switch not pressed, terminal voltage should be approx 2.5-3.0V. With switch pressed, voltage should rise to 10V. If Voltage at terminal is constant 10V or higher, then there is a short to high either at the switch, wiring harness or at the Base Bosch ECU connectors. If voltage is high, remove -C114-2_TCP, if voltage now drops, then switch is faulty, else, the fault is at the harness to the Bosch ECU. 2. Check Base Bosch ECU Connectors for bent pins or stray wires that are potentially causing a short circuit. 3. Check connectors for any sign of water ingress. 4. Check function of switch, check wiring from switch to ECU, checking for abrasions and pinching or any form of damage.

© 2025 Enter your company name



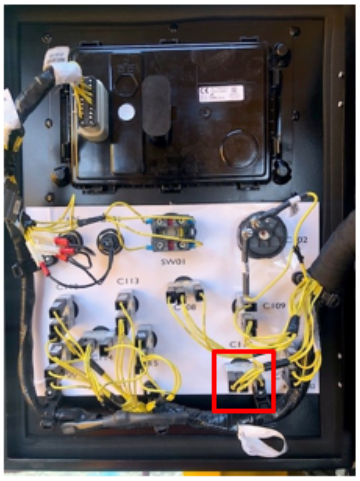

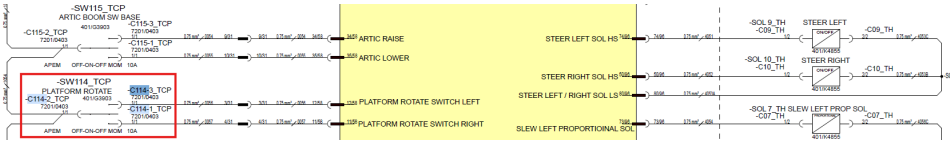

5.1.100 **B1107-17**

Error code:	**B1107-17**
ECU	Base ECU
Description:	PLATFORM ROTATE LEFT Switch Short Circuit to High
Component:	Platform Rotate Switch
Vehicle reaction:	Before operation: Ignore the input (but not output as it can be operated from where there is no fault) After operation: Refer to 10V System Short Circuit Fault reaction
Possible Cause:	1. A short circuit within the wiring harness 2. A short circuit within the harness connectors 3. Water damage/ingress within the harness connectors 4. Damaged component
Service Action:	1. Measure voltage at Base Platform Rotate terminal, -C114-3_TCP. With switch not pressed, terminal voltage should be approx 2.5-3.0V. With switch pressed, voltage should rise to 10V. If Voltage at terminal is constant 10V or

© 2025 Enter your company name

	higher, then there is a short to high either at the switch, wiring harness or at the Base Bosch ECU connectors. If voltage is high, remove -C114-2_TCP, if voltage now drops, then switch is faulty, else, the fault is at the harness to the Bosch ECU. 2. Check Base Base Bosch ECU Connectors for bent pins or stray wires that are potentially causing a short circuit. 3. Check connectors for any sign of water ingress. 4. Check function of switch, check wiring from switch to ECU, checking for abrasions and pinching or any form of damage.  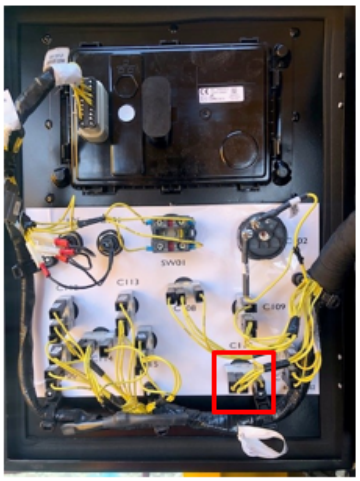 

5.1.101 B1108-92

Error code:	B1108-92
ECU	Base ECU
Description:	PLATFORM ROTATE RIGHT & LEFT Switches both activated (5 - 10V)
Component:	Platform Rotate Switch
Vehicle reaction:	Ignore the input (but not output as it can be operated from where there is no fault)

© 2025 Enter your company name

Possible Cause:	1. A short circuit within the wiring harness 2. A short circuit within the harness connectors 3. Water damage/ingress within the harness connectors 4. Damaged component
Service Action:	1. Measure voltage at Base Platform Rotate terminals, -C114-1_TCP & -C114-3_TCP. With switch not pressed, terminal voltage should be approx 2.5-3.0V. With switch pressed, voltage should rise to 10V. If Voltage at terminal is constant 10V or higher, then there is a short to high either at the switch, wiring harness or at the Base Bosch ECU connectors (Pins 11/58 & 12/58). If voltage is high, remove -C114-2_TCP, if voltage now drops, then switch is faulty, else, the fault is at the harness to the Bosch ECU. 2. Check Base Base Bosch ECU Connectors for bent pins or stray wires that are potentially causing a short circuit. 3. Check connectors for any sign of water ingress. 4. Check function of switch, check wiring from switch to ECU, checking for abrasions and pinching or any form of damage.  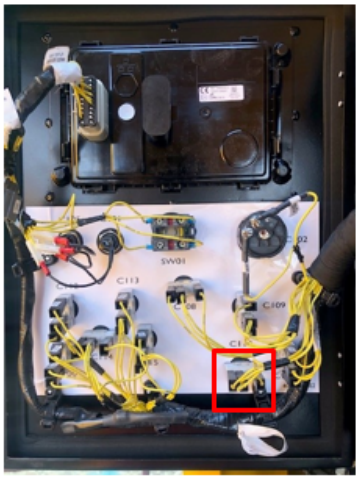 

5.1.102 **B1109-16**

Error code:	**B1109-16**
ECU	Base ECU
Description:	PLATFORM ROTATE RIGHT Switch Short Circuit to Low

© 2025 Enter your company name

Component :	Platform Rotate Switch
Vehicle reaction:	Before operation: Ignore the input (but not output as it can be operated from where there is no fault) After operation: Refer to 10V System Short Circuit Fault reaction
Possible Cause:	1. A short circuit within the wiring harness 2. A short circuit to the chassis 3. A short circuit within the harness connectors 4. Water damage/ingress within the harness connectors 5. Damaged component
Service Action:	1. Measure voltage at Base Platform Rotate terminal, -C114-1_TCP. With switch not pressed, terminal voltage should be approx 2.5-3.0V. With switch pressed, voltage should rise to 10V. If Voltage at terminal is constantly <2.4V or lower, then there is a short to GND either at the switch, wiring harness or at the Base Bosch ECU connectors. If voltage is Low, remove -C114-2_TCP, if voltage now rises to ~2.5V, then switch is faulty, else, the fault is at the harness to the Bosch ECU. 2. Check there are no visible defects in the wiring causing a short circuit to chassis / GND 3. Check Base Base Bosch ECU Connectors for bent pins or stray wires that are potentially causing a short circuit. 4. Check connectors for any sign of water ingress. 5. Check function of switch, check wiring from switch to ECU, checking for abrasions and pinching or any form of damage.  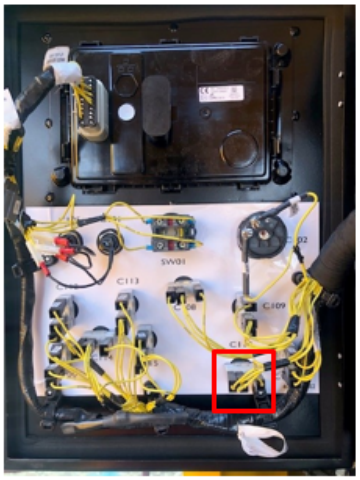 

© 2025 Enter your company name

5.1.103 B1110-16

Error code:	B1110-16
ECU	Base ECU
Description:	PLATFORM ROTATE LEFT Switch Short Circuit to Low
Component:	Platform Rotate Switch
Vehicle reaction:	Before operation: Ignore the input (but not output as it can be operated from where there is no fault) After operation: Refer to 10V System Short Circuit Fault reaction
Possible Cause:	1. A short circuit within the wiring harness 2. A short circuit to the chassis 3. A short circuit within the harness connectors 4. Water damage/ingress within the harness connectors 5. Damaged component
Service Action:	1. Measure voltage at Base Platform Rotate terminal, -C114-3_TCP. With switch not pressed, terminal voltage should be approx 2.5-3.0V. With switch pressed, voltage should rise to 10V. If Voltage at terminal is constantly <2.4V or lower, then there is a short to GND either at the switch, wiring harness or at the Base Bosch ECU connectors. If voltage is Low, remove -C114-2_TCP, if voltage now rises to ~2.5V, then switch is faulty, else, the fault is at the harness to the Bosch ECU. 2. Check there are no visible defects in the wiring causing a short circuit to chassis / GND 3. Check Base Base Bosch ECU Connectors for bent pins or stray wires that are potentially causing a short circuit. 4. Check connectors for any sign of water ingress. 5. Check function of switch, check wiring from switch to ECU, checking for abrasions and pinching or any form of damage.

© 2025 Enter your company name



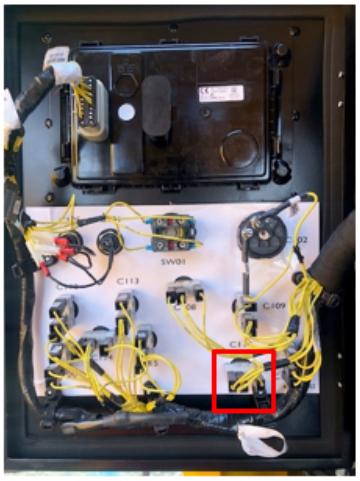



5.1.104 B1111-17

Error code:	B1111-17
ECU	Base ECU
Description:	JIB RAISE Switch Short Circuit to High
Component:	Jib Switch
Vehicle reaction:	Before operation: Ignore the input (but not output as it can be operated from where there is no fault) After operation: Refer to 10V System Short Circuit Fault reaction
Possible Cause:	1. A short circuit within the wiring harness 2. A short circuit within the harness connectors 3. Water damage/ingress within the harness connectors 4. Damaged component
Service Action:	1. Measure voltage at Base Jib Raise terminal, -C113-1_TCP. With switch not pressed, terminal voltage should be approx 2.5-3.0V. With switch pressed, voltage should rise to 10V. If Voltage at terminal is constant 10V or higher, then there is a short to high either at the switch, wiring harness or at the Base Bosch ECU connectors. If voltage is high, remove -C113-2_TCP, if

© 2025 Enter your company name

	voltage now drops, then switch is faulty, else, the fault is at the harness to the Bosch ECU. 2. Check Base Bosch ECU Connectors for bent pins or stray wires that are potentially causing a short circuit. 3. Check connectors for any sign of water ingress. 4. Check function of switch, check wiring from switch to ECU, checking for abrasions and pinching or any form of damage.  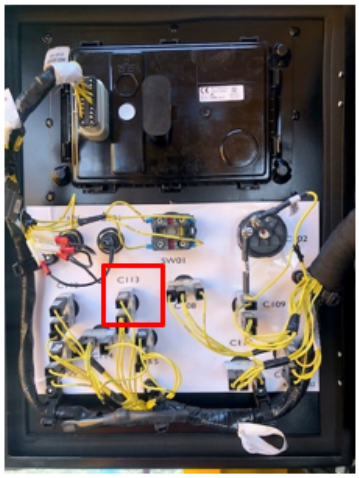 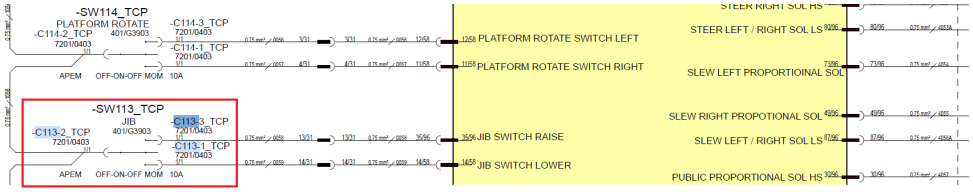

5.1.105 B1112-17

Error code:	B1112-17
ECU	Base ECU
Description:	Jib Lower Switch Short Circuit to High
Component:	Jib Switch
Vehicle reaction:	Before operation: Ignore the input (but not output as it can be operated from where there is no fault) After operation: Refer to 10V System Short Circuit Fault reaction

© 2025 Enter your company name

Possible Cause:	1. A short circuit within the wiring harness 2. A short circuit within the harness connectors 3. Water damage/ingress within the harness connectors 4. Damaged component
Service Action:	1. Measure voltage at Base Jib Lower terminal, -C113-3_TCP. With switch not pressed, terminal voltage should be approx 2.5-3.0V. With switch pressed, voltage should rise to 10V. If Voltage at terminal is constant 10V or higher, then there is a short to high either at the switch, wiring harness or at the Base Bosch ECU connectors. If voltage is high, remove -C113-2_TCP, if voltage now drops, then switch is faulty, else, the fault is at the harness to the Bosch ECU. 2. Check Base Base Bosch ECU Connectors for bent pins or stray wires that are potentially causing a short circuit. 3. Check connectors for any sign of water ingress. 4. Check function of switch, check wiring from switch to ECU, checking for abrasions and pinching or any form of damage  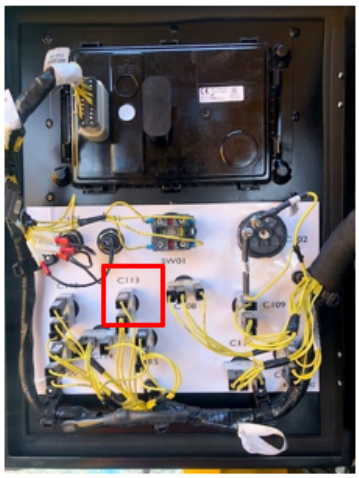 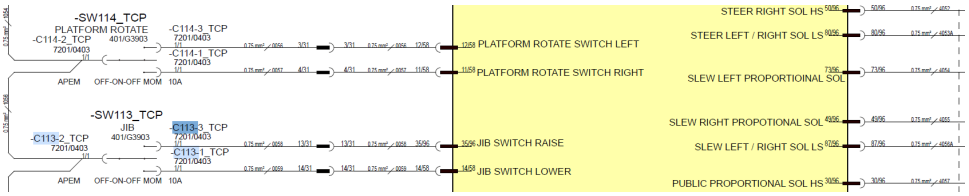

5.1.106 B1113-92

Error code:	**B1113-92**
ECU	Base ECU

© 2025 Enter your company name

Description :	JIB RAISE & LOWER Switches both activated (5 - 10V)
Component :	Jib Switch
Vehicle reaction:	Ignore the input (but not output as it can be operated from where there is no fault)
Possible Cause:	1. A short circuit within the wiring harness 2. A short circuit within the harness connectors 3. Water damage/ingress within the harness connectors 4. Damaged component
Service Action:	1. Measure voltage at Base Jib Switch terminals, -C113-1_TCP & -C113-3_TCP. With switch not pressed, terminal voltage should be approx 2.5-3.0V. With switch pressed, voltage should rise to 10V. If Voltage at terminal is constant 10V or higher, then there is a short to high either at the switch, wiring harness or at the Base Bosch ECU connectors (Pins 35/96 & 14/58). If voltage is high, remove -C113-2_TCP, if voltage now drops, then switch is faulty, else, the fault is at the harness to the Bosch ECU. 2. Check Base Base Bosch ECU Connectors for bent pins or stray wires that are potentially causing a short circuit. 3. Check connectors for any sign of water ingress. 4. Check function of switch, check wiring from switch to ECU, checking for abrasions and pinching or any form of damage.  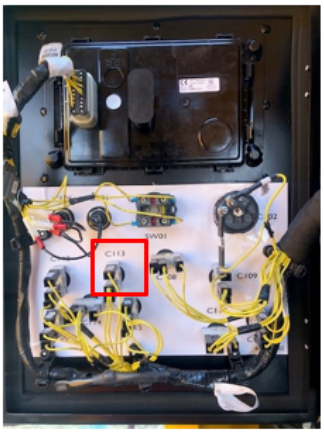 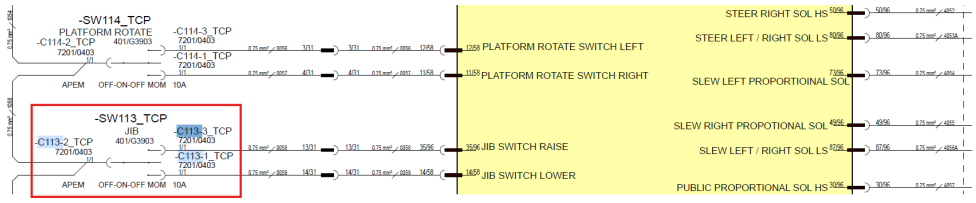

© 2025 Enter your company name

5.1.107 B1114-16

Error code:	B1114-16
ECU	Base ECU
Description:	Jib Raise Switch Short Circuit to Low
Component:	Jib Switch
Vehicle reaction:	Before operation: Ignore the input (but not output as it can be operated from where there is no fault) After operation: Refer to 10V System Short Circuit Fault reaction
Possible Cause:	1. A short circuit within the wiring harness 2. A short circuit to the chassis 3. A short circuit within the harness connectors 4. Water damage/ingress within the harness connectors 5. Damaged component
Service Action:	1. Measure voltage at Base Jib Raise terminal, -C113-1_TCP. With switch not pressed, terminal voltage should be approx 2.5-3.0V. With switch pressed, voltage should rise to 10V. If Voltage at terminal is constantly <2.4V or lower, then there is a short to GND either at the switch, wiring harness or at the Base Bosch ECU connectors. If voltage is Low, remove -C113-2_TCP, if voltage now rises to ~2.5V, then switch is faulty, else, the fault is at the harness to the Bosch ECU. 2. Check there are no visible defects in the wiring causing a short circuit to chassis / GND 3. Check Base Base Bosch ECU Connectors for bent pins or stray wires that are potentially causing a short circuit. 4. Check connectors for any sign of water ingress. 5. Check function of switch, check wiring from switch to ECU, checking for abrasions and pinching or any form of damage.

© 2025 Enter your company name



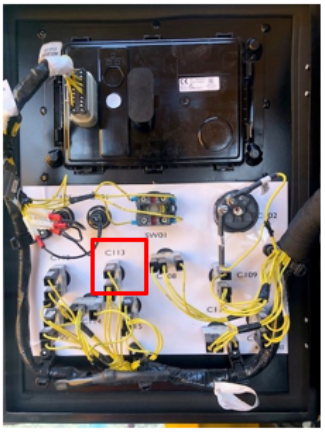

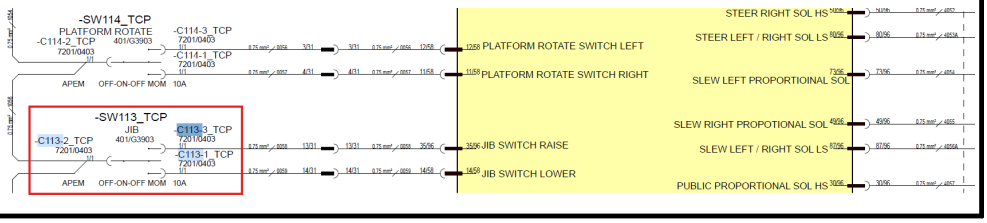

5.1.108 B1115-16

Error code:	B1115-16
ECU	Base ECU
Description:	Jib Lower Switch Short Circuit to Low
Component:	Jib Switch
Vehicle reaction:	Before operation: Ignore the input (but not output as it can be operated from where there is no fault) After operation: Refer to 10V System Short Circuit Fault reaction
Possible Cause:	1. A short circuit within the wiring harness 2. A short circuit to the chassis 3. A short circuit within the harness connectors 4. Water damage/ingress within the harness connectors 5. Damaged component
Service Action:	1. Measure voltage at Base Jib Lower terminal, -C113-3_TCP. With switch not pressed, terminal voltage should be approx 2.5-3.0V. With switch pressed, voltage should rise to 10V. If Voltage at terminal is constantly <2.4V or lower, then there is a short to GND either at the switch, wiring harness or

© 2025 Enter your company name

	at the Base Bosch ECU connectors. If voltage is Low, remove -C113-2_TCP, if voltage now rises to ~2.5V, then switch is faulty, else, the fault is at the harness to the Bosch ECU. 2. Check there are no visible defects in the wiring causing a short circuit to chassis / GND 3. Check Base Base Bosch ECU Connectors for bent pins or stray wires that are potentially causing a short circuit. 4. Check connectors for any sign of water ingress. 5. Check function of switch, check wiring from switch to ECU, checking for abrasions and pinching or any form of damage.  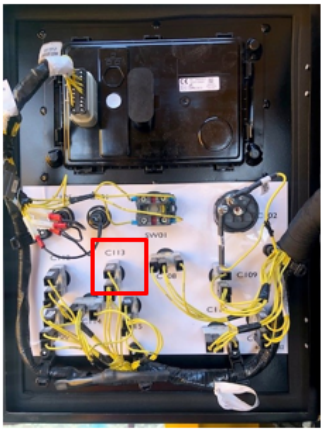 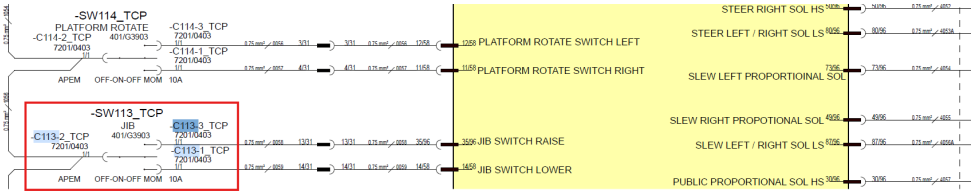

5.1.109 B1116-17

Error code:	B1116-17
ECU	Base ECU
Description:	MAIN BOOM RAISE (BASE) Switch Short Circuit to High
Component:	Main Boom Switch
Vehicle reaction:	Before operation: Ignore the input (but not output as it can be operated from where there is no fault) After operation: Refer to 10V System Short Circuit Fault reaction

© 2025 Enter your company name

Possible Cause:	1. A short circuit within the wiring harness 2. A short circuit within the harness connectors 3. Water damage/ingress within the harness connectors 4. Damaged component
Service Action:	1. Measure voltage at Base Main Boom Raise terminal, -C109-1_TCP. With switch not pressed, terminal voltage should be approx 2.5-3.0V. With switch pressed, voltage should rise to 10V. If Voltage at terminal is constant 10V or higher, then there is a short to high either at the switch, wiring harness or at the Base Bosch ECU connectors. If voltage is high, remove -C109-2_TCP, if voltage now drops, then switch is faulty, else, the fault is at the harness to the Bosch ECU. 2. Check Base Bosch ECU Connectors for bent pins or stray wires that are potentially causing a short circuit. 3. Check connectors for any sign of water ingress. 4. Check function of switch, check wiring from switch to ECU, checking for abrasions and pinching or any form of damage.  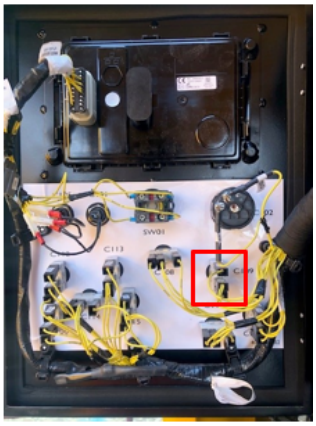 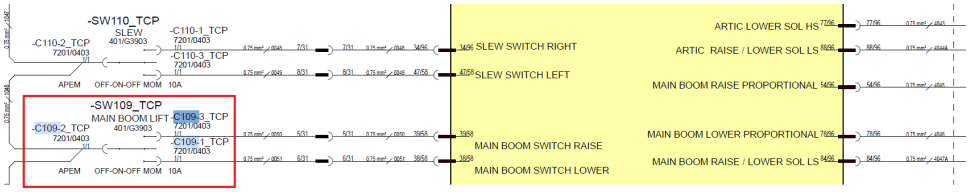

5.1.110 B1117-17

Error code:	**B1117-17**
ECU	Base ECU
Description :	MAIN BOOM LOWER (BASE) Switch Short Circuit to High

© 2025 Enter your company name

Component:	Main Boom Switch
Vehicle reaction:	Before operation: Ignore the input (but not output as it can be operated from where there is no fault) After operation: Refer to 10V System Short Circuit Fault reaction
Possible Cause:	1. A short circuit within the wiring harness 2. A short circuit within the harness connectors 3. Water damage/ingress within the harness connectors 4. Damaged component
Service Action:	1. Measure voltage at Base Main Boom Lower terminal, -C109-3_TCP. With switch not pressed, terminal voltage should be approx 2.5-3.0V. With switch pressed, voltage should rise to 10V. If Voltage at terminal is constant 10V or higher, then there is a short to high either at the switch, wiring harness or at the Base Bosch ECU connectors. If voltage is high, remove -C109-2_TCP, if voltage now drops, then switch is faulty, else, the fault is at the harness to the Bosch ECU. 2. Check Base Base Bosch ECU Connectors for bent pins or stray wires that are potentially causing a short circuit. 3. Check connectors for any sign of water ingress. 4. Check function of switch, check wiring from switch to ECU, checking for abrasions and pinching or any form of damage  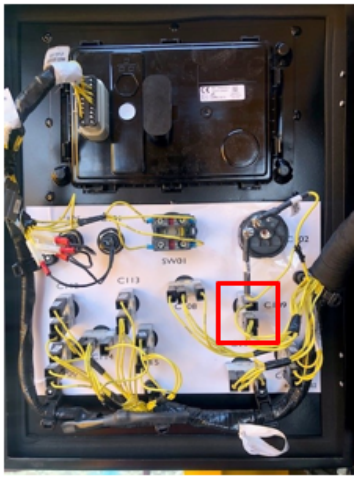 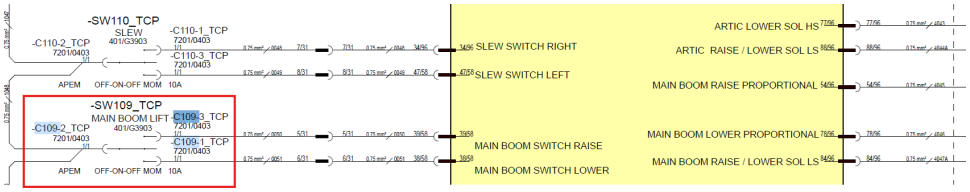

© 2025 Enter your company name

5.1.111 B1118-92

Error code:	B1118-92
ECU	Base ECU
Description:	MAIN BOOM RAISE & LOWER (BASE) Switches both activated (5 - 10V)
Component:	Main Boom Switch
Vehicle reaction:	Ignore the input (but not output as it can be operated from where there is no fault)
Possible Cause:	1. A short circuit within the wiring harness 2. A short circuit within the harness connectors 3. Water damage/ingress within the harness connectors 4. Damaged component
Service Action:	1. Measure voltage at Base Main Boom Raise/Lower Switch terminals, -C109-1_TCP & -C109-3_TCP. With switch not pressed, terminal voltage should be approx 2.5-3.0V. With switch pressed, voltage should rise to 10V. If Voltage at terminal is constant 10V or higher, then there is a short to high either at the switch, wiring harness or at the Base Bosch ECU connectors (Pins 39/58 & 38/58). If voltage is high, remove -C109-2_TCP, if voltage now drops, then switch is faulty, else, the fault is at the harness to the Bosch ECU. 2. Check Base Base Bosch ECU Connectors for bent pins or stray wires that are potentially causing a short circuit. 3. Check connectors for any sign of water ingress. 4. Check function of switch, check wiring from switch to ECU, checking for abrasions and pinching or any form of damage.

© 2025 Enter your company name





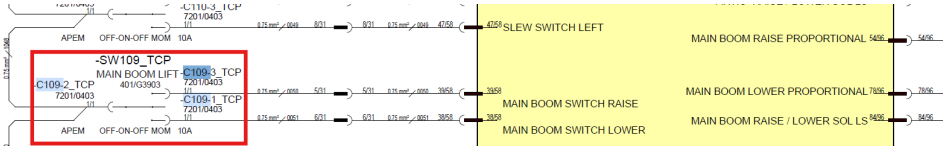

5.1.112 B1119-16

Error code:	B1119-16
ECU	Base ECU
Description:	MAIN BOOM RAISE (BASE) Switch Short Circuit to Low
Component:	Main Boom Switch
Vehicle reaction:	Before operation: Ignore the input (but not output as it can be operated from where there is no fault) After operation: Refer to 10V System Short Circuit Fault reaction
Possible Cause:	1. A short circuit within the wiring harness 2. A short circuit to the chassis 3. A short circuit within the harness connectors 4. Water damage/ingress within the harness connectors 5. Damaged component

© 2025 Enter your company name

Service Action:	1. Measure voltage at Base Main Boom Raise terminal, -C109-1_TCP. With switch not pressed, terminal voltage should be approx 2.5-3.0V. With switch pressed, voltage should rise to 10V. If Voltage at terminal is constantly <2.4V or lower, then there is a short to GND either at the switch, wiring harness or at the Base Bosch ECU connectors. If voltage is Low, remove -C109-2_TCP, if voltage now rises to ~2.5V, then switch is faulty, else, the fault is at the harness to the Bosch ECU. 2. Check there are no visible defects in the wiring causing a short circuit to chassis / GND 3. Check Base Base Bosch ECU Connectors for bent pins or stray wires that are potentially causing a short circuit. 4. Check connectors for any sign of water ingress. 5. Check function of switch, check wiring from switch to ECU, checking for abrasions and pinching or any form of damage  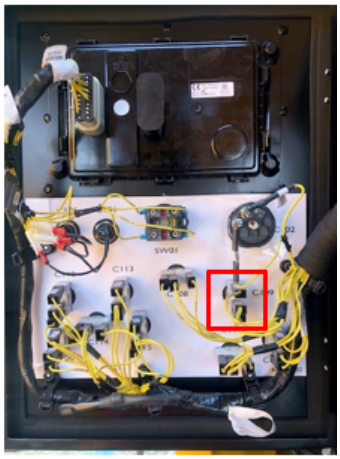 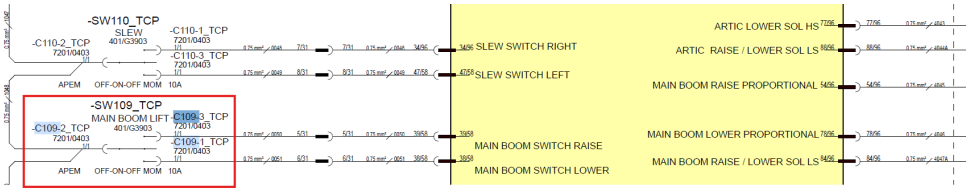

5.1.113 B1120-16

Error code:	**B1120-16**
ECU	Base ECU
Description:	MAIN BOOM LOWER (BASE) Switch Short Circuit to Low
Component:	Main Boom Switch

© 2025 Enter your company name

Vehicle reaction:	Before operation: Ignore the input (but not output as it can be operated from where there is no fault) After operation: Refer to 10V System Short Circuit Fault reaction
Possible Cause:	1. A short circuit within the wiring harness 2. A short circuit to the chassis 3. A short circuit within the harness connectors 4. Water damage/ingress within the harness connectors 5. Damaged component
Service Action:	1. Measure voltage at Base Main Boom Raise terminal, -C109-1_TCP. With switch not pressed, terminal voltage should be approx 2.5-3.0V. With switch pressed, voltage should rise to 10V. If Voltage at terminal is constantly <2.4V or lower, then there is a short to GND either at the switch, wiring harness or at the Base Bosch ECU connectors. If voltage is Low, remove -C109-2_TCP, if voltage now rises to ~2.5V, then switch is faulty, else, the fault is at the harness to the Bosch ECU. 2. Check there are no visible defects in the wiring causing a short circuit to chassis / GND 3. Check Base Base Bosch ECU Connectors for bent pins or stray wires that are potentially causing a short circuit. 4. Check connectors for any sign of water ingress. 5. Check function of switch, check wiring from switch to ECU, checking for abrasions and pinching or any form of damage.  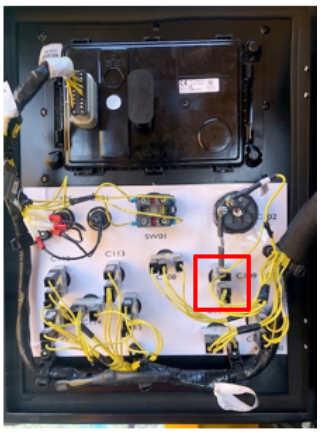 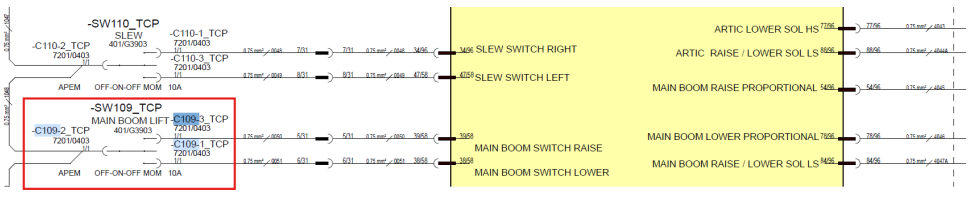 </td>

© 2025 Enter your company name

5.1.114 B1121-17

Error code:	B1121-17
ECU	Base ECU
Description:	SLEW RIGHT (BASE) Switch Short Circuit to High
Component:	Slew Switch
Vehicle reaction:	Before operation: Ignore the input (but not output as it can be operated from where there is no fault) After operation: Refer to 10V System Short Circuit Fault reaction
Possible Cause:	1. A short circuit within the wiring harness 2. A short circuit within the harness connectors 3. Water damage/ingress within the harness connectors 4. Damaged component
Service Action:	1. Measure voltage at Base Slew Right terminal, -C110-1_TCP. With switch not pressed, terminal voltage should be approx 2.5-3.0V. With switch pressed, voltage should rise to 10V. If Voltage at terminal is constant 10V or higher, then there is a short to high either at the switch, wiring harness or at the Base Bosch ECU connectors. If voltage is high, remove -C110-2_TCP, if voltage now drops, then switch is faulty, else, the fault is at the harness to the Bosch ECU. 2. Check Base Bosch ECU Connectors for bent pins or stray wires that are potentially causing a short circuit. 3. Check connectors for any sign of water ingress. 4. Check function of switch, check wiring from switch to ECU, checking for abrasions and pinching or any form of damage.

© 2025 Enter your company name



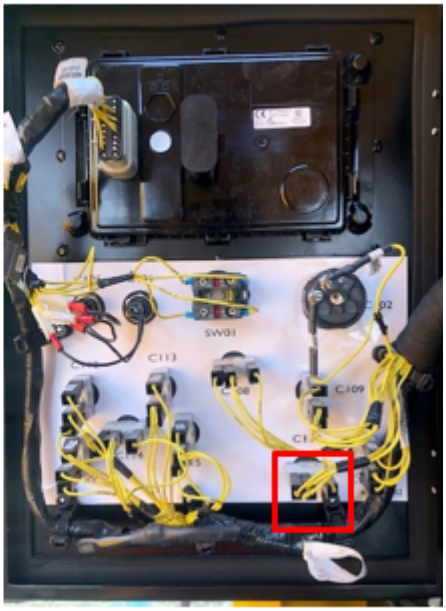

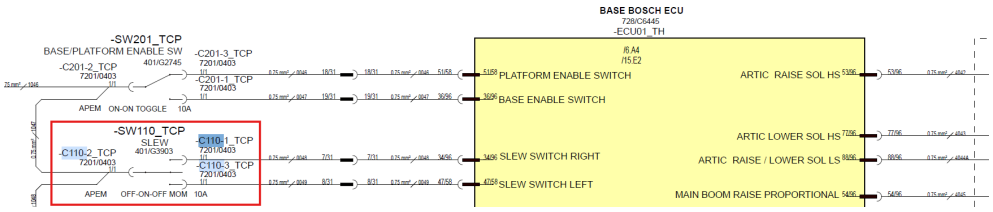

5.1.115 B1122-17

Error code:	B1122-17
ECU	Base ECU
Description:	SLEW LEFT (BASE) Switch Short Circuit to High
Component:	Slew Switch
Vehicle reaction:	Before operation: Ignore the input (but not output as it can be operated from where there is no fault) After operation: Refer to 10V System Short Circuit Fault reaction
Possible Cause:	1. A short circuit within the wiring harness 2. A short circuit within the harness connectors

© 2025 Enter your company name

	3.Water damage/ingress within the harness connectors 4. Damaged component
Service Action:	1. Measure voltage at Base Slew Left terminal, -C110-3_TCP. With switch not pressed, terminal voltage should be approx 2.5-3.0V. With switch pressed, voltage should rise to 10V. If Voltage at terminal is constant 10V or higher, then there is a short to high either at the switch, wiring harness or at the Base Bosch ECU connectors. If voltage is high, remove -C110-2_TCP, if voltage now drops, then switch is faulty, else, the fault is at the harness to the Bosch ECU. 2. Check Base Base Bosch ECU Connectors for bent pins or stray wires that are potentially causing a short circuit. 3. Check connectors for any sign of water ingress. 4. Check function of switch, check wiring from switch to ECU, checking for abrasions and pinching or any form of damage.  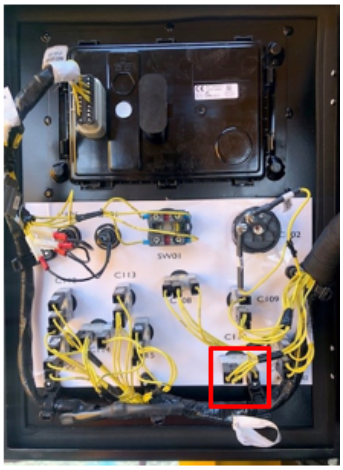 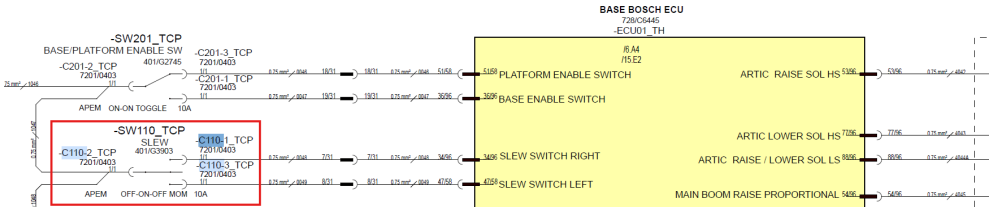

5.1.116 B1123-92

Error code:	**B1123-92**
ECU	Base ECU
Description:	SLEW RIGHT & LEFT (BASE) Switches both activated (5 - 10V)

© 2025 Enter your company name

Component:	Slew Switch
Vehicle reaction:	Ignore the input (but not output as it can be operated from where there is no fault)
Possible Cause:	1. A short circuit within the wiring harness 2. A short circuit within the harness connectors 3. Water damage/ingress within the harness connectors 4. Damaged component
Service Action:	1. Measure voltage at Base Slew Right/Left Switch terminals, -C110-1_TCP & -C110-3_TCP. With switch not pressed, terminal voltage should be approx 2.5-3.0V. With switch pressed, voltage should rise to 10V. If Voltage at terminal is constant 10V or higher, then there is a short to high either at the switch, wiring harness or at the Base Bosch ECU connectors (Pins 34/58 & 47/58). If voltage is high, remove -C110-2_TCP, if voltage now drops, then switch is faulty, else, the fault is at the harness to the Bosch ECU. 2. Check Base Base Bosch ECU Connectors for bent pins or stray wires that are potentially causing a short circuit. 3. Check connectors for any sign of water ingress. 4. Check function of switch, check wiring from switch to ECU, checking for abrasions and pinching or any form of damage.  

© 2025 Enter your company name

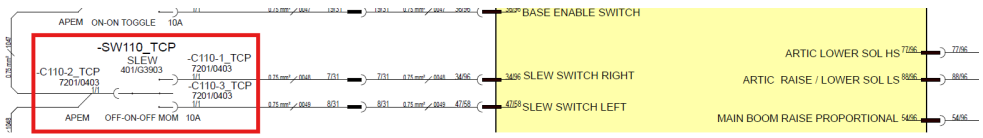

5.1.117 B1124-16

Error code:	B1124-16
ECU	Base ECU
Description:	SLEW RIGHT (BASE) Switch Short Circuit to Low
Component:	Slew Switch
Vehicle reaction:	Before operation: Ignore the input (but not output as it can be operated from where there is no fault) After operation: Refer to 10V System Short Circuit Fault reaction)
Possible Cause:	1. A short circuit within the wiring harness 2. A short circuit to the chassis 3. A short circuit within the harness connectors 4. Water damage/ingress within the harness connectors 5. Damaged component
Service Action:	1. Measure voltage at Base Slew Right terminal, -C110-1_TCP. With switch not pressed, terminal voltage should be approx 2.5-3.0V. With switch pressed, voltage should rise to 10V. If Voltage at terminal is constantly <2.4V or lower, then there is a short to GND either at the switch, wiring harness or at the Base Bosch ECU connectors. If voltage is Low, remove -C110-2_TCP, if voltage now rises to ~2.5V, then switch is faulty, else, the fault is at the harness to the Bosch ECU. 2. Check there are no visible defects in the wiring causing a short circuit to chassis / GND 3. Check Base Base Bosch ECU Connectors for bent pins or stray wires that are potentially causing a short circuit. 4. Check connectors for any sign of water ingress. 5. Check function of switch, check wiring from switch to ECU, checking for abrasions and pinching or any form of damage.

© 2025 Enter your company name



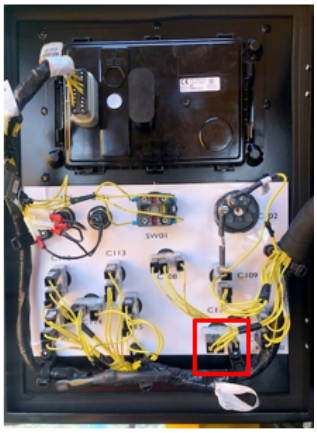

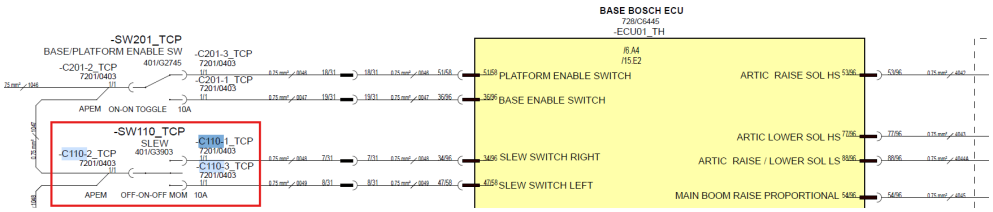

5.1.118 B1125-16

Error code:	B1125-16
ECU	Base ECU
Description:	SLEW LEFT (BASE) Switch Short Circuit to Low
Component:	Slew Switch
Vehicle reaction:	Before operation: Ignore the input (but not output as it can be operated from where there is no fault) After operation: Refer to 10V System Short Circuit Fault reaction
Possible Cause:	1. A short circuit within the wiring harness 2. A short circuit to the chassis 3. A short circuit within the harness connectors 4. Water damage/ingress within the harness connectors 5. Damaged component
Service Action:	1. Measure voltage at Base Slew Left terminal, -C110-3_TCP. With switch not pressed, terminal voltage should be approx 2.5-3.0V. With switch pressed, voltage should rise to 10V. If Voltage at terminal is constantly <2.4V

© 2025 Enter your company name

	or lower, then there is a short to GND either at the switch, wiring harness or at the Base Bosch ECU connectors. If voltage is Low, remove -C110-2_TCP, if voltage now rises to ~2.5V, then switch is faulty, else, the fault is at the harness to the Bosch ECU. 2. Check there are no visible defects in the wiring causing a short circuit to chassis / GND 3. Check Base Base Bosch ECU Connectors for bent pins or stray wires that are potentially causing a short circuit. 4. Check connectors for any sign of water ingress. 5. Check function of switch, check wiring from switch to ECU, checking for abrasions and pinching or any form of damage.  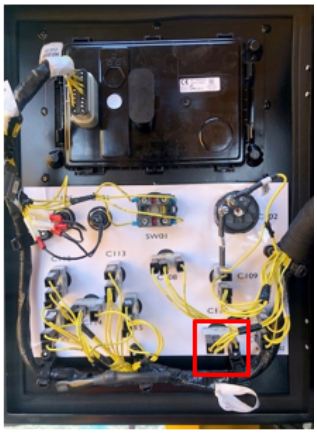 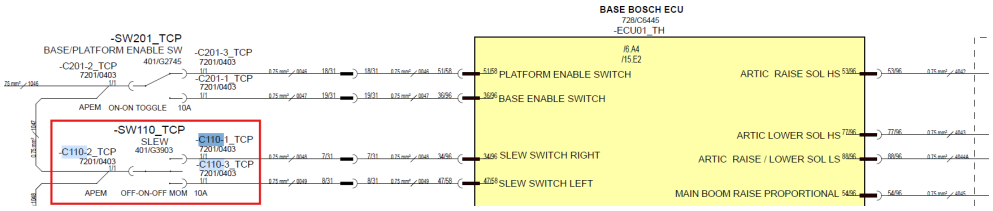

5.1.119 B1126-17

Error code:	B1126-17
ECU	Base ECU
Description:	MAIN BOOM Lower Limit Switch 1 Short Circuit to High
Component:	Main Boom Limit Switch 1
Vehicle reaction:	Default to raised position

© 2025 Enter your company name

	Prevent main boom raise & extend
Possible Cause:	1. A short circuit within the wiring harness 2. A short circuit within the harness connectors 3. Water damage/ingress within the harness connectors 4. Damaged component
Service Action:	1. Measure voltage of Boom Down Limit Switch -SW142_MBL Pin 2. Actuate the switch to check that the voltage level changes between 10V and 0V. If this does not happen, check operation of switch. Check pins at Base Bosch ECU connector. Observe harness, Check for any pinching / damage. 2. Disconnect terminal from Pin 2, measure voltage of wire. If voltage is high 10V (or Higher) then there is a short circuit to high within the harness. 3. Check for water ingress at the switch terminals, The interconnects and at the Base Bosch ECU connectors. 4. Check the Switch,Base Bosch ECU and harnessing connectors for any damage. Pay particular attention to ECU pins as these could be bent. 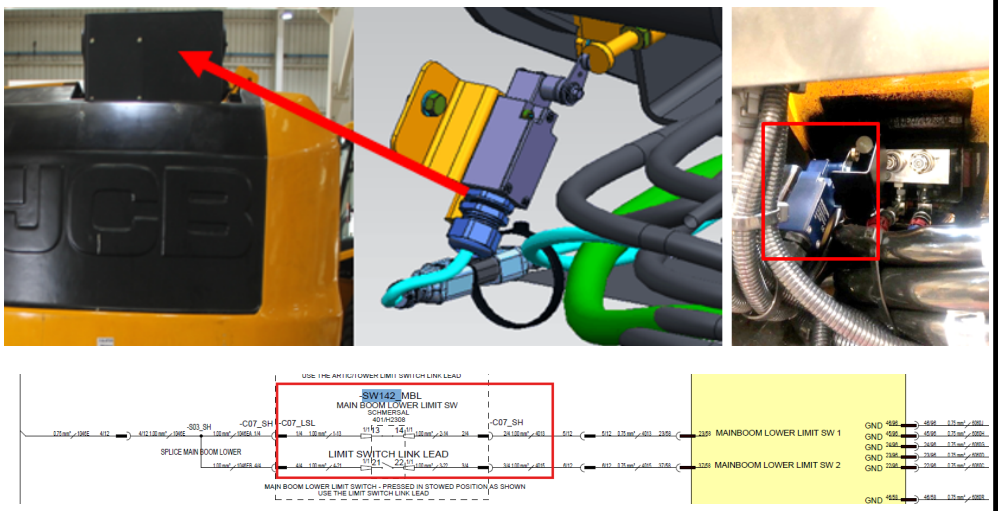

5.1.120 B1127-17

Error code:	**B1127-17**
ECU	Base ECU
Description:	MAIN BOOM Lower Limit Switch 2 Short Circuit to High
Component:	Main Boom Limit Switch 2
Vehicle reaction:	Default to raised position Prevent main boom raise & extend

© 2025 Enter your company name

Possible Cause:	1. A short circuit within the wiring harness 2. A short circuit within the harness connectors 3. Water damage/ingress within the harness connectors 4. Damaged component
Service Action:	1. Measure voltage of Boom Down Limit Switch -SW142_MBL Pin 4. Actuate the switch to check that the voltage level changes between 10V and 0V. If this does not happen, check operation of switch. Check pins at Base Bosch ECU connector. Inspect harness, check for any pinching / damage. 2. Disconnect terminal from Pin 4, measure voltage of wire. If voltage is high 10V (or Higher) then there is a short circuit to high within the harness. 3. Check for water ingress at the switch terminals and at the Base Bosch ECU connectors. 4. Check the Switch, Base Bosch ECU and harnessing connectors for any damage. Pay particular attention to ECU pins as these could be bent. 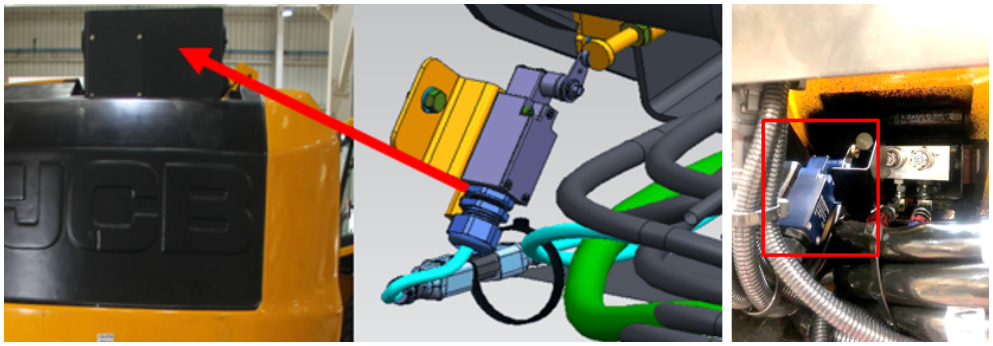 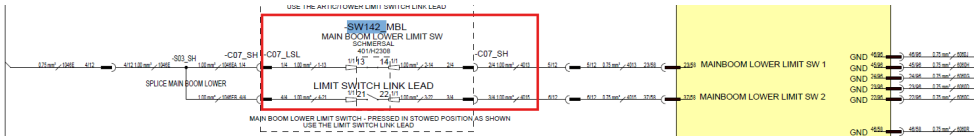

5.1.121 **B1128-16**

Error code:	**B1128-16**
ECU	Base ECU
Description:	MAIN BOOM Lower Limit Switch 1 Short Circuit to Low
Component:	Main Boom Limit Switch 1
Vehicle reaction:	Default to raised position Prevent main boom raise & extend

© 2025 Enter your company name

Possible Cause:	1. A short circuit within the wiring harness 2. A short circuit to the chassis 3. A short circuit within the harness connectors 4. Water damage/ingress within the harness connectors 5. Damaged component
Service Action:	1. Measure voltage of Boom Down Limit Switch -SW142_MBL Pin 2. Actuate the switch to check that the voltage level changes between 0V and 10V. If this does not happen, check operation of switch. Check pins at Base Bosch ECU connector. Inspect harness, Check for any pinching / damage. 2. Disconnect terminal from Pin 2, measure voltage of switch output at this pin. If voltage remains at 0V when switch is actuated then there is a short circuit to ground within the switch or the input to the switch. 3. Check for water ingress at the switch terminals and at the Base Bosch ECU connectors. 4. Check the Switch, Base Bosch ECU and harnessing connectors for any damage. Pay particular attention to ECU pins as these could be bent. 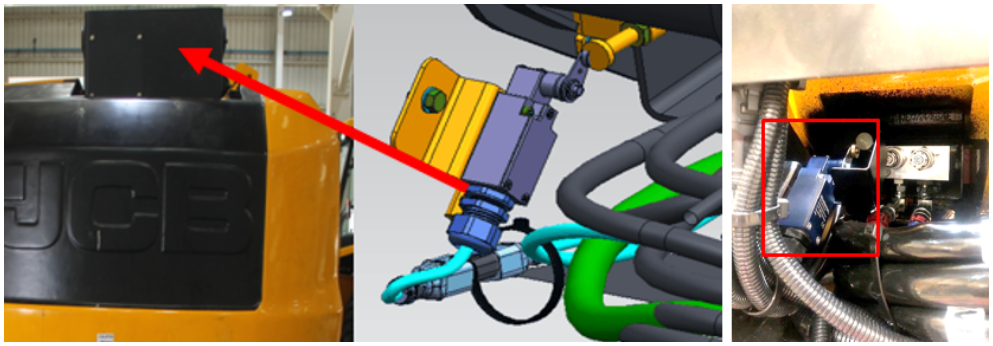 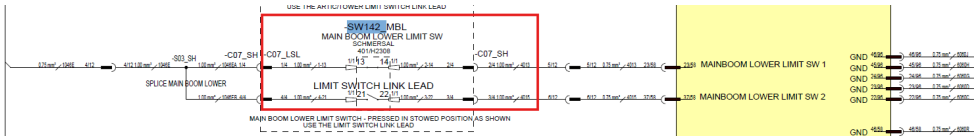

5.1.122 **B1129-13**

Error code:	**B1129-13**
ECU	Base ECU
Description:	MAIN BOOM Lower Limit Switch 1 AND Switch 2 Open Circuit
Component:	Main Boom Limit Switch(es)
Vehicle reaction:	Default to raised position Prevent main boom raise & extend

© 2025 Enter your company name

Possible Cause:	1. A poor connection or damaged terminal within the connector(s) 2. A damaged or broken wire within the wiring harness 3. Component is damaged
Service Action:	1. Check Terminals at Boom Down Limit Switch -SW221_MBT. Check terminals at Base Bosch ECU Connectors. Ensure all connectors are fully seated. 2. Check continuity with resistance meter between ECU to Boom Down Limit Switch -SW221_MBT terminals. 3. Check Operation of Main Boom Limit Switch. Observe all parts for damage. Check terminals not backed out in Base Bosch ECU Connector. 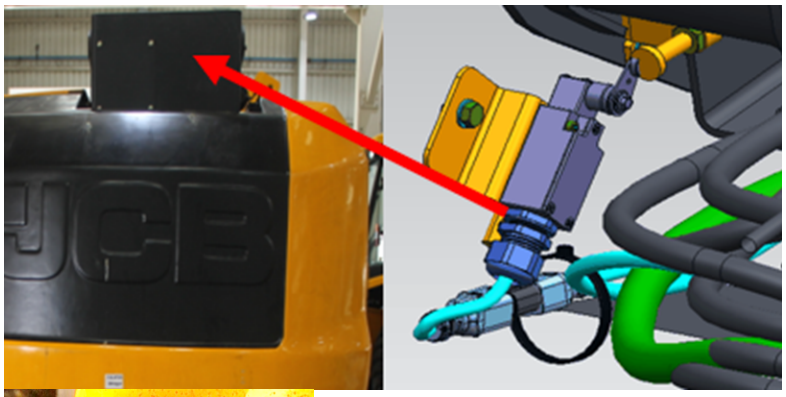 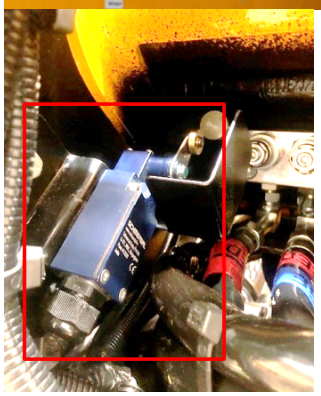 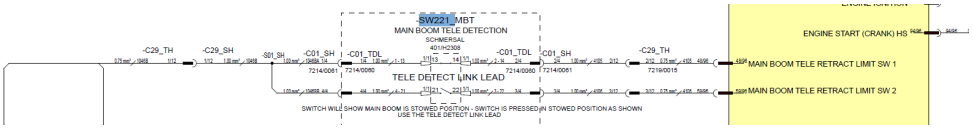

5.1.123 B1130-16

Error code:	**B1130-16**
ECU	Base ECU

© 2025 Enter your company name

Description:	MAIN BOOM Lower Limit Switch Short Circuit to Low
Component:	Main Boom Limit Switch
Vehicle reaction:	Default to raised position Prevent main boom raise & extend
Possible Cause:	1. A short circuit within the wiring harness 2. A short circuit to the chassis 3. A short circuit within the harness connectors 4. Water damage/ingress within the harness connectors 5. Damaged component
Service Action:	1. Measure voltage of Boom Down Limit Switch -SW142_MBL Pin 4. Actuate the switch to check that the voltage level changes between 0V and 10V. If this does not happen, check operation of switch. Check pins at Base Bosch ECU connector. Observe harness, Check for any pinching / damage. 2. Disconnect terminal from Pin 4, measure voltage of switch output at this pin. If voltage remains at 0V when switch is actuated then there is a short circuit to ground within the switch or the input to the switch. 3. Check for water ingress at the switch terminals and at the Base Bosch ECU connectors. 4. Check the Switch, Base Bosch ECU and harnessing connectors for any damage. Pay particular attention to ECU pins as these could be bent. 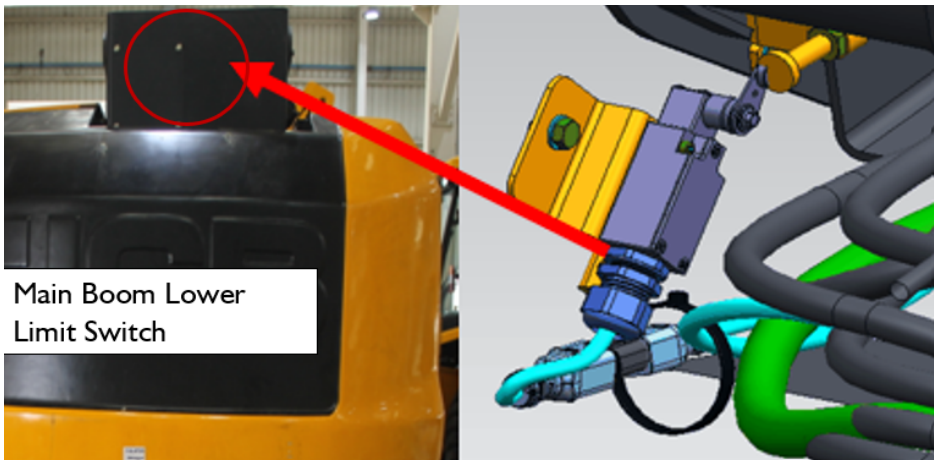 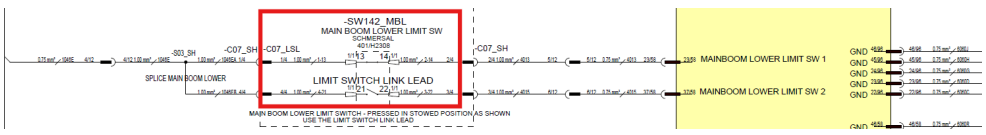

© 2025 Enter your company name

5.1.124 B1131-2F

Error code:	B1131-2F
ECU	Base ECU
Description:	Position Control - Main Boom Lower Limit Switch Short Circuit to High
Component:	Main Boom Limit Switch
Vehicle reaction:	Default to raised position Prevent main boom raise & extend
Possible Cause:	1. A short circuit within the wiring harness 2. A short circuit within the harness connectors 3. Water damage/ingress within the harness connectors 4. Damaged component
Service Action:	1. Check wiring terminals at Boom Down Limit Switch -SW142_MBL and check wiring from Switch to connector. 2. Check none of the wires to the switch connector are not shorted together 3. Check Bosch Base ECU Connectors for Damage, Bent pins and water ingress. 4. Check Switch or harness for damage. 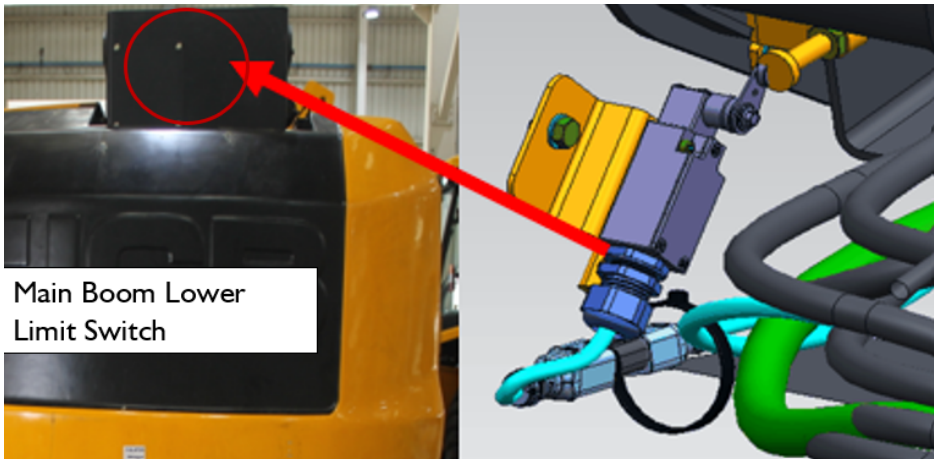 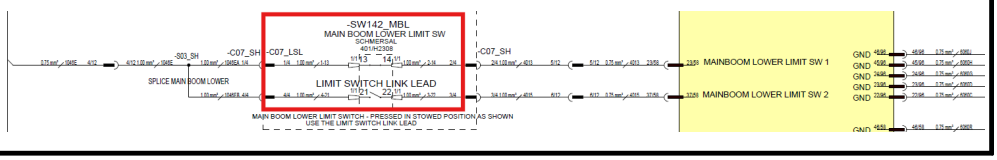

© 2025 Enter your company name

5.1.125 B1133-17

Error code:	B1133-17
ECU	Base ECU
Description:	JIB/PLATFORM FLOW High Side Solenoid Short Circuit to High
Component:	JIB/PLATFORM FLOW Solenoid
Vehicle reaction:	Detect failure mode for Short Circuit to High and disable platform rotate and allow Jib functions Note: Before Ignition ON, POST Fail (stuck in startup logic for Short Circuit to High only) and Generic output fault.
Possible Cause:	1. A short circuit within the wiring harness 2. A short circuit within the harness connectors 3. Water damage/ingress within the harness connectors 4. Damaged component
Service Action:	1. Locate Jib Up / Platform Right solenoid connector -C16_TH. Disconnect connector and measure voltage at pin 1/2. If voltage is high, check harness and Base Bosch ECU Connector terminal 7/96 for short to high. 2. Measure voltage at -C16_TH pin 2/2. If voltage is high, check return path for short to high. 3. Check -C16_TH and Base Bosch ECU Connector for water ingress, damage, debris or stray wires that may cause short circuit. 4. Check for any damage to the harness or components that may cause short circuit.

© 2025 Enter your company name

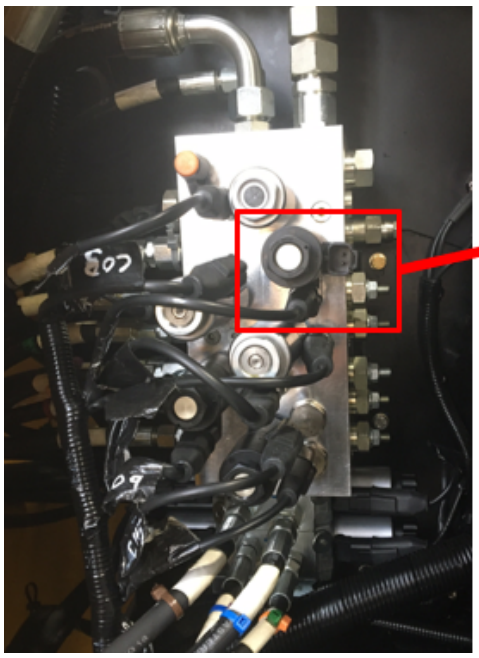

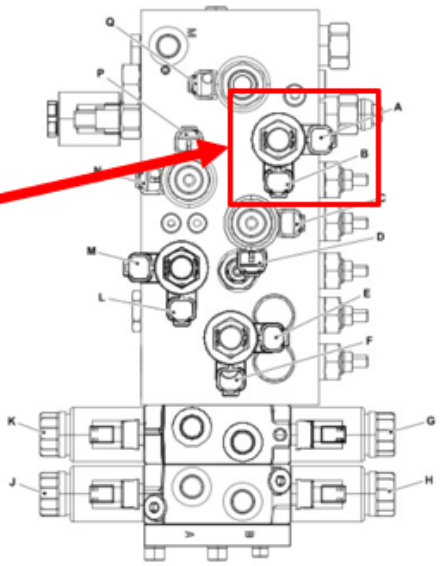

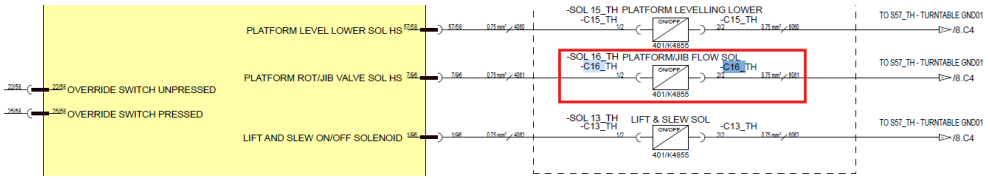

5.1.126 B1134-16

Error code:	B1134-16
ECU	Base ECU
Description:	JIB/PLATFORM FLOW High Side Solenoid Short Circuit to Low
Component:	JIB/PLATFORM FLOW Solenoid
Vehicle reaction:	Detect failure mode for Short Circuit to Low and disable platform rotate and allow Jib functions
Possible Cause:	1. A short circuit within the wiring harness 2. A short circuit to the chassis 3. A short circuit within the harness connectors 4. Water damage/ingress within the harness connectors 5. Damaged component

© 2025 Enter your company name

Service Action:	1. Locate Jib Up / Platform Right solenoid connector -C16_TH. Disconnect connector and test pin 1/2 for short to GND. Check harness and Base Bosch ECU Connector terminal 7/96 for short to GND. 2. Test for short to GND at -C16_TH pin 2/2. Check return path for short to GND. 3. Check -C16_TH and Base Bosch ECU Connector for water ingress, damage, debris or stray wires that may cause short circuit. 4. Check for any damage to the harness or components that may cause short circuit. 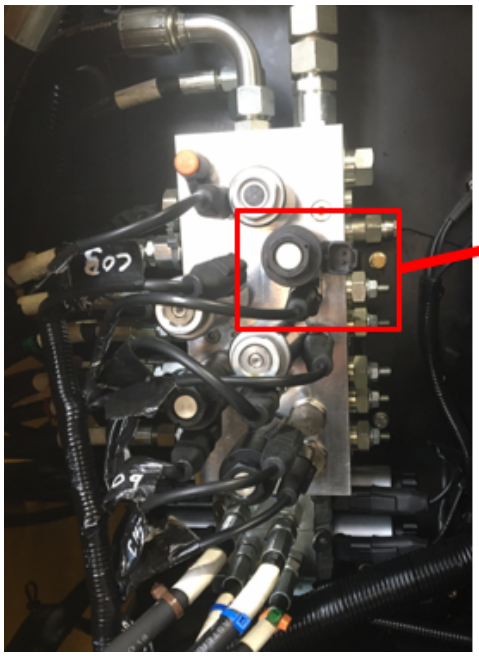 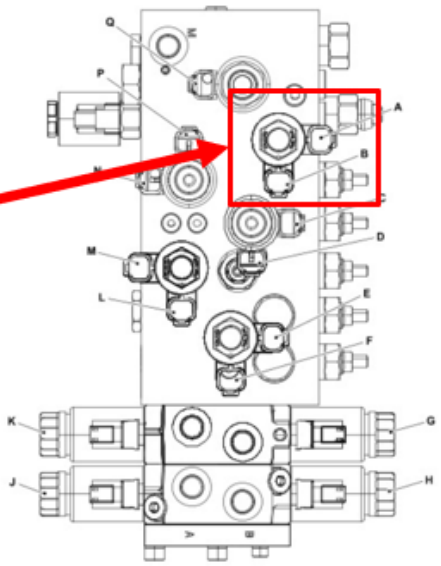 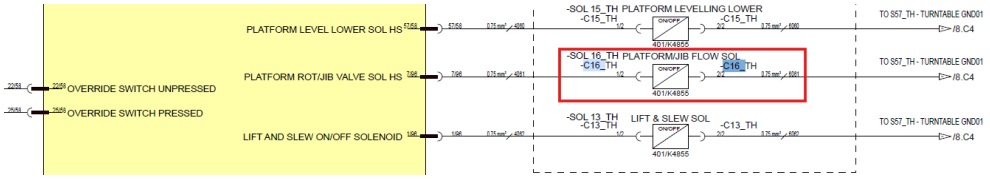

5.1.127 B1135-13

Error code:	**B1135-13**
ECU	Base ECU
Description:	Beacon(s) - Beacon 2 Open Circuit or Short Circuit to High(12v)
Component:	Beacon 2

© 2025 Enter your company name

Vehicle reaction:	Detect failure mode.
Possible Cause:	1. A short or open circuit within the wiring harness 2. A short circuit within the harness connectors 3. Water damage/ingress within the harness connectors 4. Damaged component
Service Action:	1. Check continuity between Beacon 1 connector -C20_TH pin 1/2 and Base Bosch ECU -C26-XC2_TH Pin 43/58 (Wire #4032). Check Wire #4032 not short circuit to high. 2. Check Beacon connector and ECU Connectors. Ensure no bent pins or stray wire causing short circuit. Ensure wires correctly terminated. 3. Check Beacon connector and ECU Connectors for any water ingress. 4. Check Beacon for any damage.  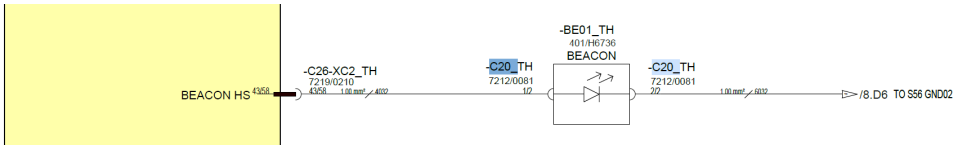

5.1.128 B1136-16

Error code:	**B1136-16**
ECU	Base ECU
Description:	Beacon(s) - Beacon 2 Short Circuit to Low.
Component:	Beacon 2
Vehicle reaction:	Detect failure mode.

© 2025 Enter your company name

Possible Cause:	1. A short circuit within the wiring harness 2. A short circuit to the chassis 3. A short circuit within the harness connectors 4. Water damage/ingress within the harness connectors 5. Damaged component
Service Action:	1. Check continuity between Beacon 1 connector -C20_TH pin 1/2 and Base Bosch ECU -C26-XC2_TH Pin 43/58 (Wire #4032). 2. Check Wire #4032 not short circuit to GND. Check for abrasions and pinching of the harness. 3. Check Beacon connector and ECU Connectors. Ensure no bent pins or stray wire causing short circuit. Ensure wires correctly terminated. 4. Check Beacon connector and ECU Connectors for any water ingress. 5. Check Beacon for any damage.  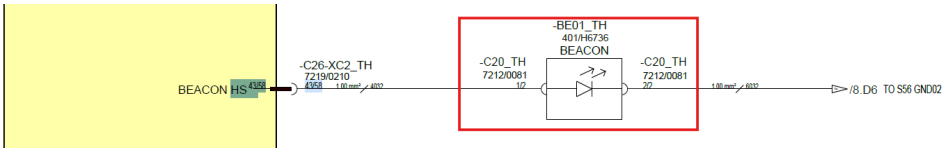

5.1.129 B1138-17

Error code:	**B1138-17**
ECU	Base ECU
Description:	Main boom telescopic retract limit switch 1 short circuit to high
Component:	Main boom telescopic retract limit switch

© 2025 Enter your company name

Vehicle reaction:	Default to raised position Prevent main boom raise & extend, and articulated boom raise Allow main boom retract at cushioning speed only Allow slew speed * 50%
Possible Cause:	1. A short circuit within the wiring harness 2. A short circuit to the chassis 3. A short circuit within the harness connectors 4. Water damage/ingress within the harness connectors 5. Damaged component
Service Action:	1. Measure voltage of Boom telescopic retract Limit Switch -SW221_MBT Pin 2. Actuate the switch to check that the voltage level changes between 10V and 0V. If this does not happen, check operation of switch. Check pins at Base Bosch ECU connector. Observe harness, Check for any pinching / damage. 2. Disconnect terminal from Pin 2, measure voltage of wire. If voltage is high 10V (or Higher) then there is a short circuit to high within the harness. 3. Check for water ingress at the switch terminals, The interconnects and at the Base Bosch ECU connectors. 4. Check the Switch,Base Bosch ECU and harnessing connectors for any damage. Pay particular attention to ECU pins as these could be bent. 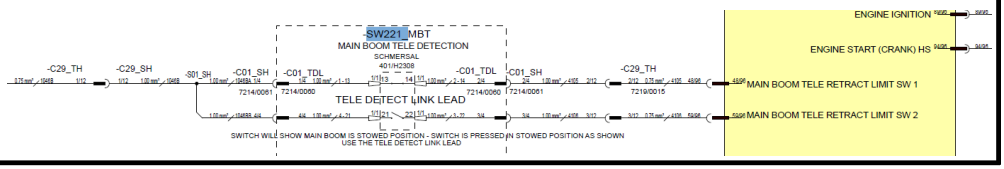

5.1.130 **B1139-17**

Error code:	**B1139-17**
ECU	Base ECU
Description:	Main boom telescopic retract limit switch 2 short circuit to high
Component:	Main boom telescopic retract limit switch
Vehicle reaction:	Default to raised position Prevent main boom raise & extend, and articulated boom raise Allow main boom retract at cushioning speed only

© 2025 Enter your company name

	Allow slew speed * 50%
Possible Cause:	1. A short circuit within the wiring harness 2. A short circuit to the chassis 3. A short circuit within the harness connectors 4. Water damage/ingress within the harness connectors 5. Damaged component
Service Action:	1. Measure voltage of Boom telescopic retract Limit Switch -SW221_MBT Pin 4. Actuate the switch to check that the voltage level changes between 10V and 0V. If this does not happen, check operation of switch. Check pins at Base Bosch ECU connector. Inspect harness, check for any pinching / damage. 2. Disconnect terminal from Pin 4, measure voltage of wire. If voltage is high 10V (or Higher) then there is a short circuit to high within the harness. 3. Check for water ingress at the switch terminals and at the Base Bosch ECU connectors. 4. Check the Switch, Base Bosch ECU and harnessing connectors for any damage. Pay particular attention to ECU pins as these could be bent. 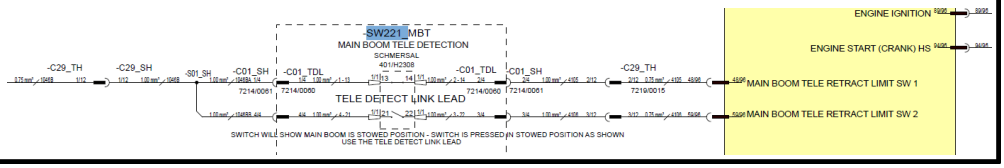

5.1.131 B1140-16

Error code:	**B1140-16**
ECU	Base ECU
Description:	Main boom telescopic retract limit switch 1 short circuit to low
Component:	Main boom telescopic retract limit switch
Vehicle reaction:	Default to raised position Prevent main boom raise & extend, and articulated boom raise Allow main boom retract at cushioning speed only Allow slew speed * 50%
Possible Cause:	1. A short circuit within the wiring harness 2. A short circuit to the chassis 3. A short circuit within the harness connectors

© 2025 Enter your company name

	4. Water damage/ingress within the harness connectors 5. Damaged component
Service Action:	1. Measure voltage of Boom telescopic retract Limit Switch -SW221_MBT Pin 2. Actuate the switch to check that the voltage level changes between 10V and 0V. If this does not happen, check operation of switch. Check pins at Base Bosch ECU connector. Observe harness, Check for any pinching / damage. 2. Disconnect terminal from Pin 2, measure voltage of wire. If voltage is high 10V (or Higher) then there is a short circuit to high within the harness. 3. Check for water ingress at the switch terminals, The interconnects and at the Base Bosch ECU connectors. 4. Check the Switch,Base Bosch ECU and harnessing connectors for any damage. Pay particular attention to ECU pins as these could be bent. 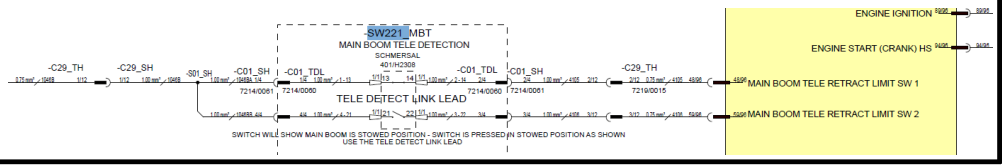

5.1.132 B1141-13

Error code:	**B1141-13**
ECU	Base ECU
Description:	Main boom telescopic retract limit switch 1 and 2 are both open circuit
Component:	Main boom telescopic retract limit switch
Vehicle reaction:	Default to raised position • Prevent main boom raise & extend, and articulated boom raise • Allow main boom retract at cushioning speed only • Allow slew speed * 50%
Possible Cause:	1. Poor connection 2. Break in wiring 3. Water in switch 4. Broken switch

© 2025 Enter your company name

Service Action:	1. Check wiring between switch and ECU for continuity 2. Check switch function with multi-meter. 3.Check switch functionality 4.Check for water ingress 5. Check for water ingress/corrosion. 6. Check wire from limit switch to Base ECU connector 4105 and 4016. 7. Check inputs on pin 13 and 21 for 10volt input. 8. Check wire 1046B for and cut or damage. 9. Check Base ECU pin 48/96 and 59/96 for bent or loose connection. 10. Check connector C29_TH and C01_TH for loose connection or any damage. 11.Turn ignition on off to clear code 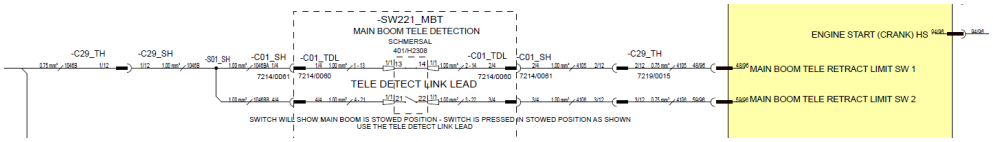

5.1.133 B1142-16

Error code:	**B1139-17**
ECU	Base ECU
Description:	Main boom telescopic retract limit switch 2 short circuit to Low
Component:	Main boom telescopic retract limit switch
Vehicle reaction:	Default to raised position Prevent main boom raise & extend, and articulated boom raise Allow main boom retract at cushioning speed only Allow slew speed * 50%

© 2025 Enter your company name

Possible Cause:	1. A short circuit within the wiring harness 2. A short circuit to the chassis 3. A short circuit within the harness connectors 4. Water damage/ingress within the harness connectors 5. Damaged component
Service Action:	1. Measure voltage of Boom telescopic retract Limit Switch -SW221_MBT Pin 4. Actuate the switch to check that the voltage level changes between 10V and 0V. If this does not happen, check operation of switch. Check pins at Base Bosch ECU connector. Inspect harness, check for any pinching / damage. 2. Disconnect terminal from Pin 4, measure voltage of wire. If voltage is high 10V (or Higher) then there is a short circuit to high within the harness. 3. Check for water ingress at the switch terminals and at the Base Bosch ECU connectors. 4. Check the Switch, Base Bosch ECU and harnessing connectors for any damage. Pay particular attention to ECU pins as these could be bent. 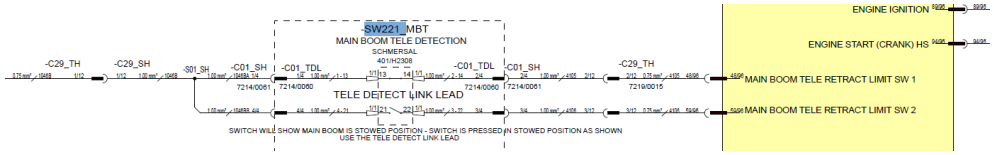

5.1.134 B1143-92

Error code:	**B1143-92**
ECU	Base ECU
Description:	Main boom telescopic retract limit switch 1 and 2 Short to 10V
Component:	Main boom telescopic retract limit switch
Vehicle reaction:	Default to raised position • Prevent main boom raise & extend, and articulated boom raise • Allow main boom retract at cushioning speed only • Allow slew speed * 50%
Possible Cause:	1. Poor connection 2. Break in wiring 3. Water in switch

© 2025 Enter your company name

	4. Broken switch
Service Action:	1.Check wiring between switch and ECU for continuity 2. Check switch function with multi-meter. 3.Check switch functionality 4.Check for water ingress 5. Check for water ingress/corrosion. 6. Check wire from limit switch to Base ECU connector 4105 and 4016. 7. Check inputs on pin 13 and 21 for 10volt input. 8. Check wire 1046B for and cut or damage. 9. Check Base ECU pin 48/96 and 59/96 for bent or loose connection. 10. Check connector C29_TH and C01_TH for loose connection or any damage. 11.Turn ignition on off to clear code 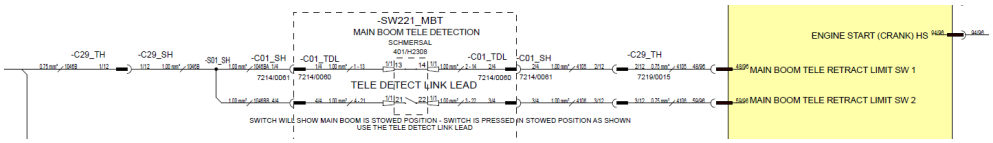

5.1.135 B1144-17

Error code:	**B1144-17**
ECU	Base ECU
Description:	Base 10v Output - 10v Input System Short Circuit to High
Component:	Base ECU
Vehicle reaction:	Block all inputs connected to 10V present on the respective control panel.
Possible Cause:	1. A short circuit within the wiring harness 2. A short circuit within the harness connectors

© 2025 Enter your company name

	3. Water damage/ingress within the harness connectors 4. Damaged component
Service Action:	1. Fault indicates the 10V output from the Base Bosch ECU (Terminal 32/58) has shorted to +12V. To narrow down fault location, Disconnect Interconnection HDP Connector -C50_TH. Measure Voltage at pin 30 and 31 of -C50_TH. If voltage is +10V, then fault is within Turntable Control Panel (else, it is the feed to the turntable limit switches). The 10V feed runs to terminal 1 on all Control Panel Switches. Check Wiring and look for shorts, abrasions and pinching within harness. 2. Check for any damage or wiring faults either at the Base Bosch ECU, Turntable Control Panel, Boom Down Limit Switch or Slew Position Switch. Check all wiring and interconnects (Control Panel Only). 3. Check all connectors above for water damage 4. Check operation of switches and all connectors for any damage. 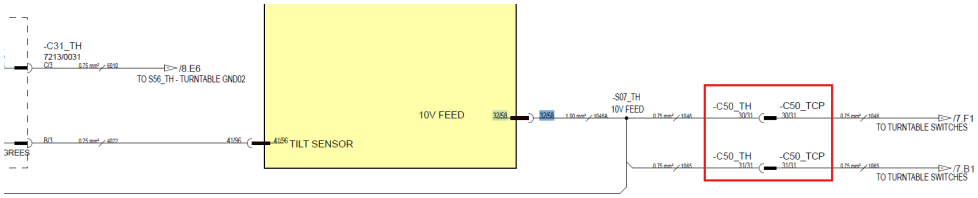

5.1.136 **B1145-16**

Error code:	**B1145-16**
ECU	Base ECU
Description:	Base 10v Output - 10v Input System Short Circuit to Low
Component:	Base ECU
Vehicle reaction:	Block all inputs connected to 10V present on the respective control panel.
Possible Cause:	1. A short circuit within the wiring harness 2. A short circuit to the chassis 3. A short circuit within the harness connectors 4. Water damage/ingress within the harness connectors 5. Damaged component
Service Action:	1. Fault indicates the 10V output from the Base Bosch ECU (Terminal 32/58) has shorted to GND. To narrow down fault location, Disconnect Interconnection HDP Connector -C50_TH. Measure resistance to GND on -C50_TCP (Control Panel mounted connector). If a short to GND exists, them

© 2025 Enter your company name

	fault lies within Turntable Control Panel (Else, check the Turntable Harness to the Limit switches). The 10V feed runs to terminal 1 on all Control Panel Switches. Check Wiring and look for shorts, abrasions and pinching within harness. 2. Check for any damage or wiring faults either at the Base Bosch ECU, Turntable Control Panel, Boom Down Limit Switch or Slew Position Switch. Check all wiring and interconnects (Control Panel Only). 3. Check all connectors above for water damage 4. Check operation of switches and all connectors for any damage. 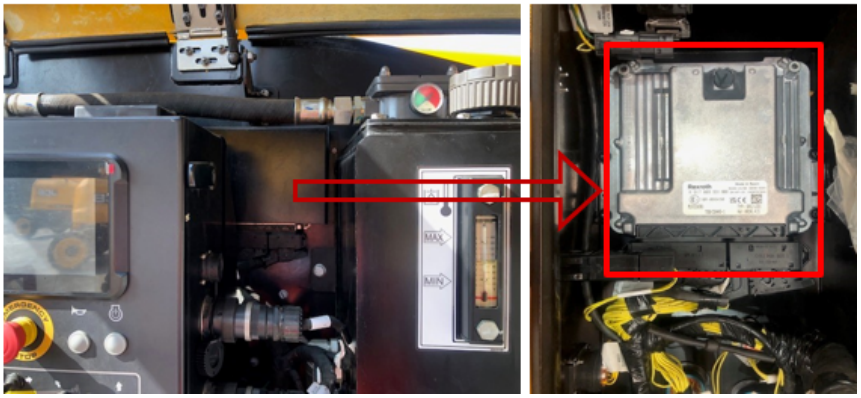 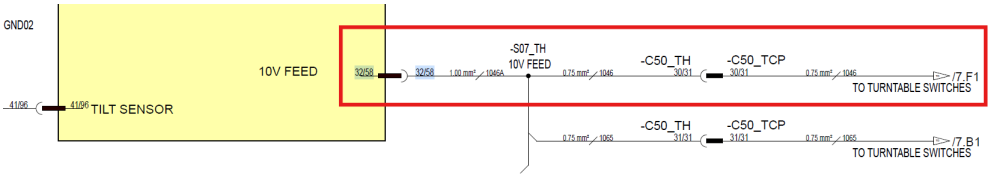

5.1.137 B1146-17

Error code:	B1146-17
ECU	Platform ECU
Description:	STEER JOYSTICK Short Circuit to High (>4.75V)
Component:	Steer Joystick
Vehicle reaction:	Detect failure mode - Ignore steer input (machine stops immediately)
Possible Cause:	1. A short circuit within the wiring harness 2. A short circuit within the harness connectors 3. Water damage/ingress within the harness connectors 4. Damaged component

© 2025 Enter your company name

Service Action:	1. Measure voltage between pin 1/6 (GND) and pin 5/6 (Steer) on joystick connector. Voltage should measure between 0.25 - 4.75V depending on position of Joystick. If value is above 4.75V then there is likely a short circuit to high either within the joystick or wiring back to the Platform Bosch ECU Pin 41/96. 2. Check Connectors at joystick and Platform Bosch ECU, check for bent pins or stray wires potentially causing a short circuit. 3. Check Connectors at joystick and Platform Bosch ECU for water ingress. 4. Check joystick for damage. Check all wiring for potential damage, especially abrasions and pinching.  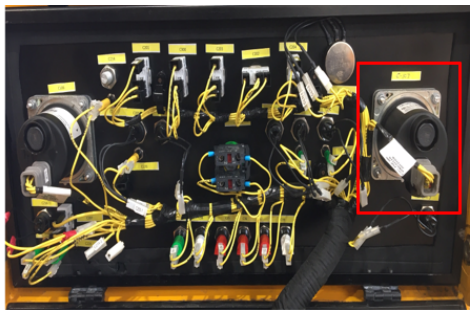 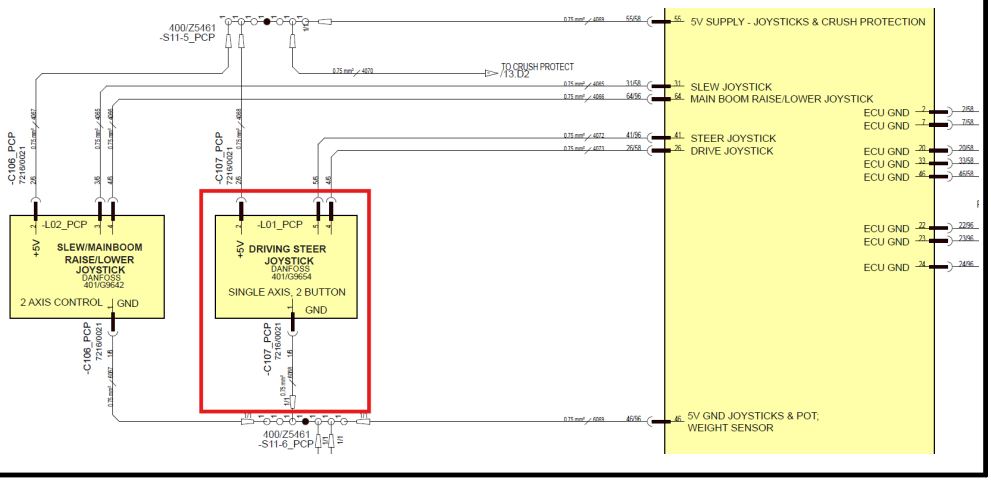

5.1.138 B1147-16

Error code:	**B1147-16**
ECU	Platform ECU
Description:	STEER JOYSTICK Short Circuit to Low (<0.25V) or Open Circuit
Component:	Steer Joystick

© 2025 Enter your company name

Vehicle reaction:	Detect failure mode - Ignore steer input (machine stops immediately)
Possible Cause:	1. A short circuit within the wiring harness 2. A short circuit to the chassis 3. A short circuit within the harness connectors 4. Water damage/ingress within the harness connectors 5. Damaged component 6. A damaged or broken wire within the wiring harness
Service Action:	1. Measure voltage between pin 1/6 (GND) and pin 5/6 (Steer) on joystick connector. Voltage should measure between 0.25 - 4.75V depending on position of Joystick. If value is below 0.25V then there is likely a short circuit to GND either within the joystick or wiring back to the Platform Bosch ECU Pin 41/96. 2. Check Connectors at joystick and Platform Bosch ECU, check for bent pins or stray wires potentially causing a short circuit. 3. Check Connectors at joystick and Platform Bosch ECU for water ingress. 4. Check joystick for damage. Check all wiring for potential damage, especially abrasions and pinching.



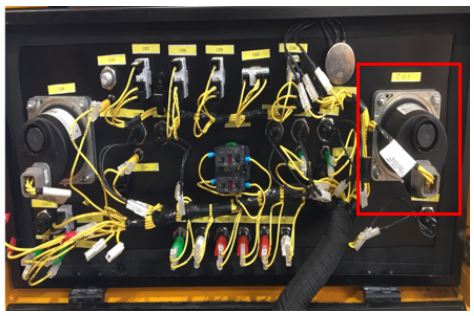

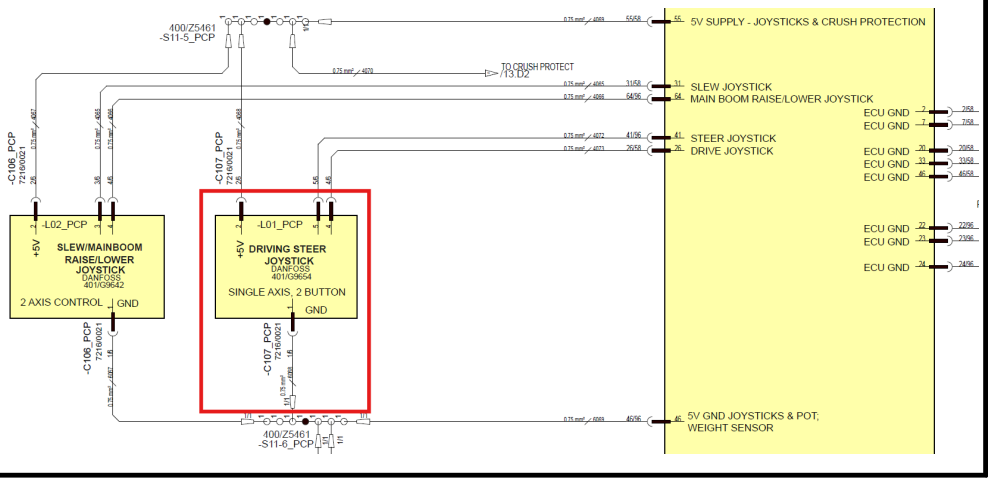

5.1.139 **B1148-17**

Error code:	**B1148-17**

© 2025 Enter your company name

ECU	Platform ECU
Description:	Joystick Boom Raise/Lower Short Circuit to High (>4.75V)
Component:	Main Boom Joystick
Vehicle reaction:	Detect failure mode - Ignore lift input
Possible Cause:	1. A short circuit within the wiring harness 2. A short circuit within the harness connectors 3. Water damage/ingress within the harness connectors 4. Damaged component
Service Action:	1. Measure voltage between pin 1/6 (GND) and pin 4/6 (Main Boom Raise/Lower) on joystick connector. Voltage should measure between 0.25 - 4.75V depending on position of Joystick. If value is above 4.75V then there is likely a short circuit to high either within the joystick or wiring back to the Platform Bosch ECU Pin 64/96. 2. Check Connectors at joystick and Platform Bosch ECU, check for bent pins or stray wires potentially causing a short circuit. 3. Check Connectors at joystick and Platform Bosch ECU for water ingress. 4. Check joystick for damage. Check all wiring for potential damage, especially abrasions and pinching.  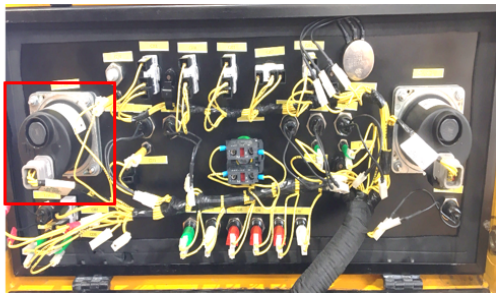 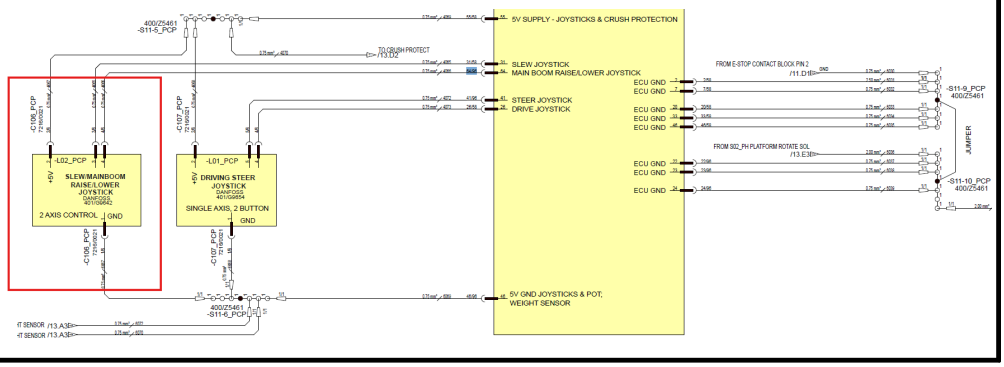

© 2025 Enter your company name

5.1.140 B1149-16

Error code:	B1149-16
ECU	Platform ECU
Description:	Joystick Boom Raise/Lower Short Circuit to Low (<0.25V) or Open Circuit
Component:	Main Boom Joystick
Vehicle reaction:	Detect failure mode - Ignore lift input
Possible Cause:	1. A short circuit within the wiring harness 2. A short circuit to the chassis 3. A short circuit within the harness connectors 4. Water damage/ingress within the harness connectors 5. Damaged component 6. A damaged or broken wire within the wiring harness
Service Action:	1. Measure voltage between pin 1/6 (GND) and pin 4/6 (Main Boom Raise/Lower) on joystick connector. Voltage should measure between 0.25 - 4.75V depending on position of Joystick. If value is below 0.25V then there is likely a short circuit to GND either within the joystick or wiring back to the Platform Bosch ECU Pin 64/96. 2. Check Connectors at joystick and Platform Bosch ECU, check for bent pins or stray wires potentially causing a short circuit. 3. Check Connectors at joystick and Platform Bosch ECU for water ingress. 4. Check joystick for damage. Check all wiring for potential damage, especially abrasions and pinching.  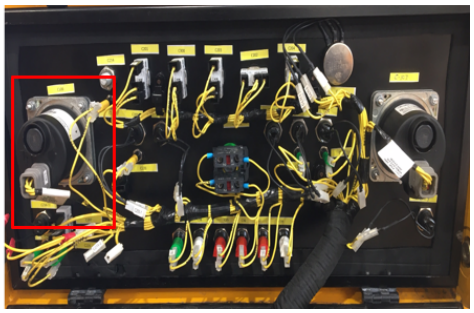

© 2025 Enter your company name

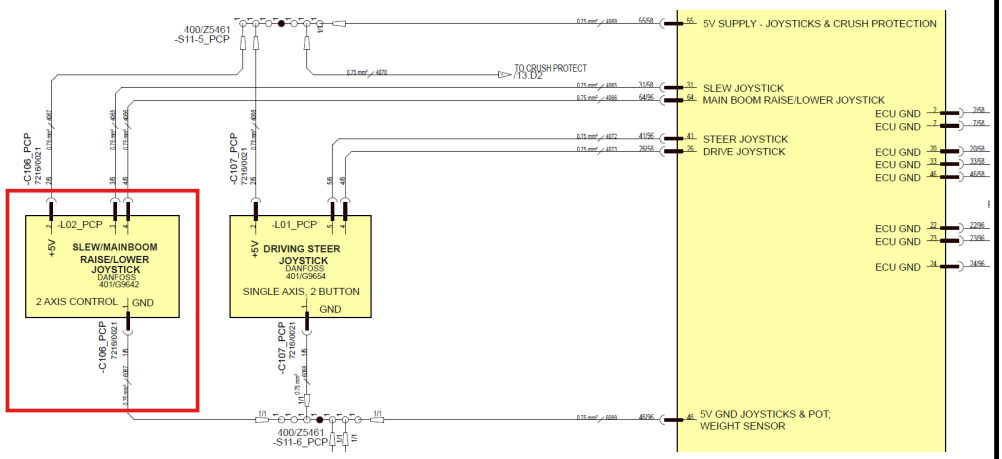

5.1.141 B1150-17

Error code:	B1150-17
ECU	Platform ECU
Description:	SLEW JOYSTICK Short Circuit to High (>4.75V)
Component:	Slew Joystick
Vehicle reaction:	Detect failure mode - Ignore slew input
Possible Cause:	1. A short circuit within the wiring harness 2. A short circuit within the harness connectors 3. Water damage/ingress within the harness connectors 4. Damaged component
Service Action:	1. Measure voltage between pin 1/6 (GND) and pin 3/6 (Slew) on joystick connector. Voltage should measure between 0.25 - 4.75V depending on position of Joystick. If value is above 4.75V then there is likely a short circuit to high either within the joystick or wiring back to the Platform Bosch ECU Pin 31/58. 2. Check Connectors at joystick and Platform Bosch ECU, check for bent pins or stray wires potentially causing a short circuit. 3. Check Connectors at joystick and Platform Bosch ECU for water ingress. 4. Check joystick for damage. Check all wiring for potential damage, especially abrasions and pinching.

© 2025 Enter your company name

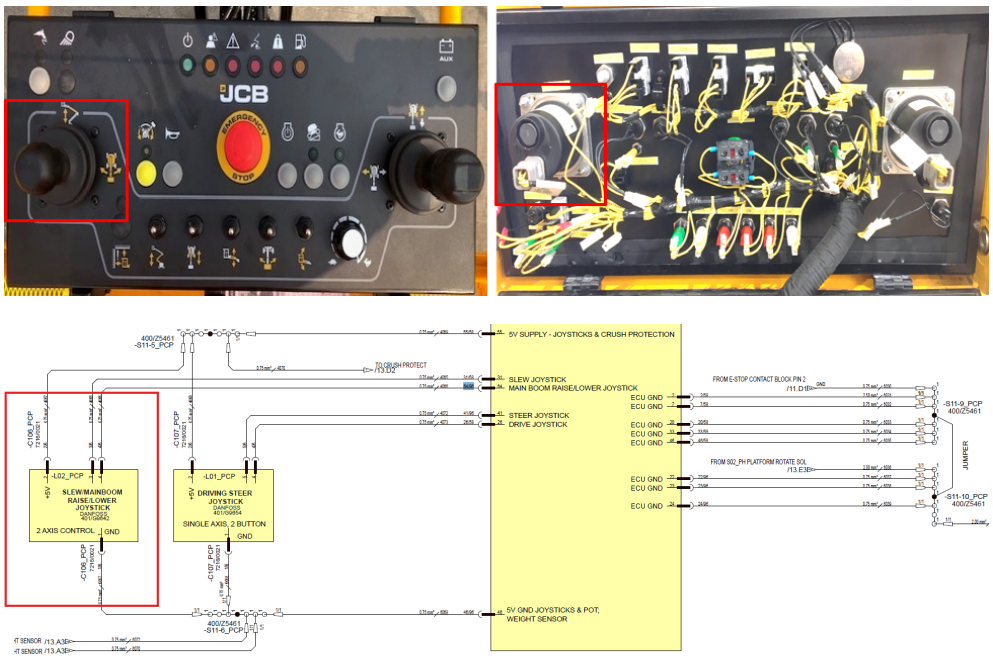

5.1.142 B1151-16

Error code:	B1151-16
ECU	Platform ECU
Description:	SLEW JOYSTICK Short Circuit to Low (<0.25V) or Open Circuit
Component:	Slew Joystick
Vehicle reaction:	Detect failure mode - Ignore slew input
Possible Cause:	1. A short circuit within the wiring harness 2. A short circuit to the chassis 3. A short circuit within the harness connectors 4. Water damage/ingress within the harness connectors 5. Damaged component 6. A damaged or broken wire within the wiring harness
Service Action:	1. Measure voltage between pin 1/6 (GND) and pin 3/6 (Slew) on joystick connector. Voltage should measure between 0.25 - 4.75V depending on position of Joystick. If value is below 0.25V then there is likely a short circuit to GND either within the joystick or wiring back to the Platform Bosch ECU Pin 31/58.

© 2025 Enter your company name

	2. Check Connectors at joystick and Platform Bosch ECU, check for bent pins or stray wires potentially causing a short circuit. 3. Check Connectors at joystick and Platform Bosch ECU for water ingress. 4. Check joystick for damage. Check all wiring for potential damage, especially abrasions and pinching. 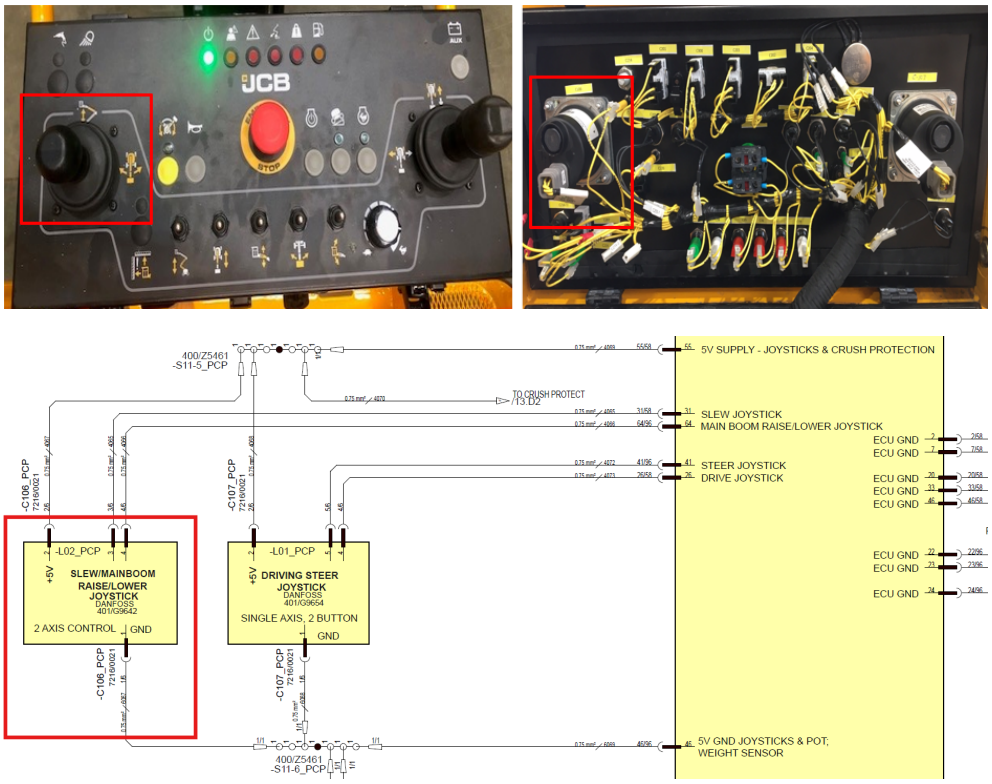

5.1.143 B1154-16

Error code:	B1154-16
ECU	Platform ECU
Description:	SLEW JOYSTICK Short Circuit to Low (<0.25V) or Open Circuit
Component:	Slew Joystick
Vehicle reaction:	Detect failure mode - Ignore slew input
Possible Cause:	1. A short circuit within the wiring harness 2. A short circuit to the chassis 3. A short circuit within the harness connectors

© 2025 Enter your company name

	4. Water damage/ingress within the harness connectors 5. Damaged component 6. A damaged or broken wire within the wiring harness
Service Action:	1. Measure voltage between pin 1/6 (GND) and pin 3/6 (Slew) on joystick connector. Voltage should measure between 0.25 - 4.75V depending on position of Joystick. If value is below 0.25V then there is likely a short circuit to GND either within the joystick or wiring back to the Platform Bosch ECU Pin 31/58. 2. Check Connectors at joystick and Platform Bosch ECU, check for bent pins or stray wires potentially causing a short circuit. 3. Check Connectors at joystick and Platform Bosch ECU for water ingress. 4. Check joystick for damage. Check all wiring for potential damage, especially abrasions and pinching.  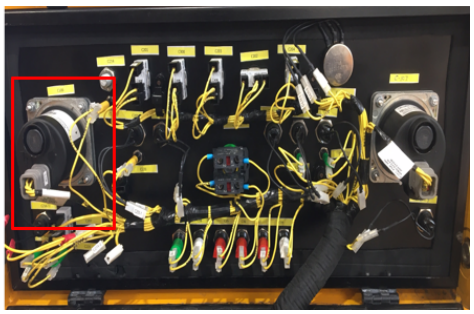 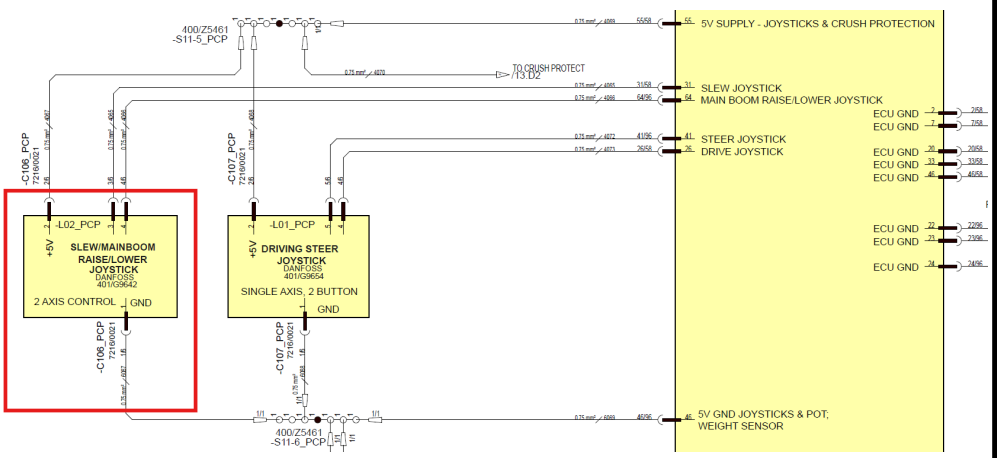

5.1.144 B1167-13

Error code:	**B1167-13**
ECU	Platform ECU
Description :	Platform rotate left output solenoid short circuit to high or open circuit

© 2025 Enter your company name

Component:	Platform rotate left output solenoid
Vehicle reaction:	Detect failure modes. Don't disable any output and don't ignore any input
Possible Cause:	1. A short circuit within the wiring harness 2. A short circuit to the chassis 3. A short circuit within the harness connectors 4. Water damage/ingress within the harness connectors 5. Damaged component
Service Action:	1. Fault indicates short to high or open circuit to Platform rotate left Solenoid. Check voltage at solenoid connector -C04_PH pin 1/2 greater than 10.5 volt and check coil resistance.. 2. Check continuity of GND path from Solenoid connector -C04_PH pin 2/2 to Turntable GND & Check Ground wire 6084. 3. Check Interconnect -C22_PCP / -C22_PH pin S/21. Check bent / backed out pins, debris, shorts or water ingress. 4. Check Platform ECU terminal 77/96. Check Connector for bent / backed out pins, debris, shorts or water ingress. 5. Check wire #4084 for continuity from Platform ECU pin 77/96 to Platform rotate left Solenoid connector -C04_PH pin 1/2. 6. Check the harness for any abrasions, pinching or any other damage that may lead to a fault. 7. Check if valve is mechanically jammed 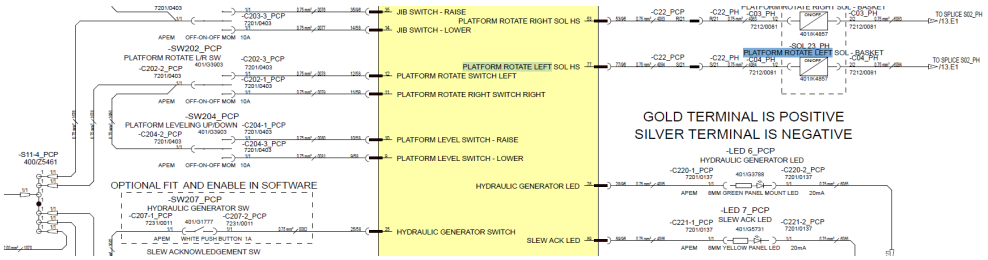

5.1.145 B1168-16

Error code:	**B1168-16**
ECU	Platform ECU
Description:	PLATFORM ROTATE LEFT Solenoid Valve Short Circuit to Low
Component:	Platform rotate left solenoid

© 2025 Enter your company name

Vehicle reaction:	Detect failure modes. Don’t disable any output and don’t ignore any input
Possible Cause:	1. A short circuit within the wiring harness 2. A short circuit to the chassis 3. A short circuit within the harness connectors 4. Water damage/ingress within the harness connectors 5. Damaged component
Service Action:	1. Fault indicates short to high or open circuit to Platform rotate left Solenoid. Check voltage at solenoid connector -C04_PH pin 1/2 greater than 10.5 volt and check coil resistance.. 2. Check continuity of GND path from Solenoid connector -C04_PH pin 2/2 to Turntable GND & Check Ground wire 6084. 3. Check Interconnect -C22_PCP / -C22_PH pin S/21. Check bent / backed out pins, debris, shorts or water ingress. 4. Check Platform ECU terminal 77/96. Check Connector for bent / backed out pins, debris, shorts or water ingress. 5. Check wire #4084 for continuity from Platform ECU pin 77/96 to Platform rotate left Solenoid connector -C04_PH pin 1/2. 6. Check the harness for any abrasions, pinching or any other damage that may lead to a fault. 7. Check if valve is mechanically jammed 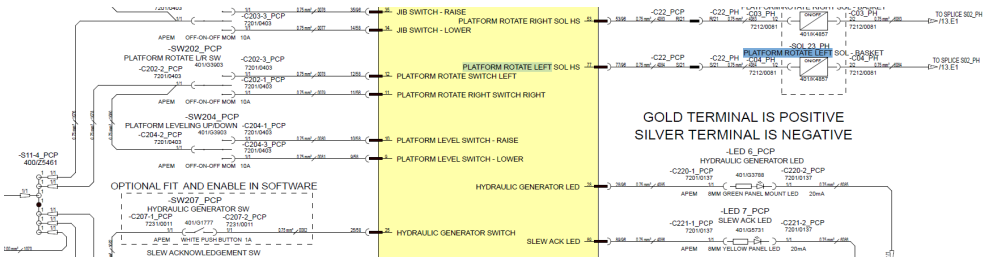

5.1.146 B1169-13

Error code:	**B1169-13**
ECU	Platform ECU
Description:	Platform rotate right output solenoid short circuit to high or open circuit
Component:	Platform rotate right output solenoid
Vehicle reaction:	Detect failure modes. Don’t disable any output and don’t ignore any input

© 2025 Enter your company name

Possible Cause:	1 A short circuit within the wiring harness 2. A short circuit to the chassis 3. A short circuit within the harness connectors 4. Water damage/ingress within the harness connectors 5. Damaged component
Service Action:	1. Fault indicates short to high or open circuit to Platform rotate right Solenoid. Check voltage at solenoid connector -C03_PH pin 1/2 greater than 10.5 volt and check coil resistance. 2. Check continuity of GND path from Solenoid connector -C03_PH pin 2/2 to Turntable GND & Check Ground wire 6083. 3. Check Interconnect -C22_PCP / -C22_PH pin R/21. Check bent / backed out pins, debris, shorts or water ingress. 4. Check Platform ECU terminal 53/96. Check Connector for bent / backed out pins, debris, shorts or water ingress. 5. Check wire #4083 for continuity from Platform ECU pin 53/96 to Platform rotate right Solenoid connector -C03_PH pin 1/2. 6. Check the harness for any abrasions, pinching or any other damage that may lead to a fault. 7. Check if valve is mechanically jammed 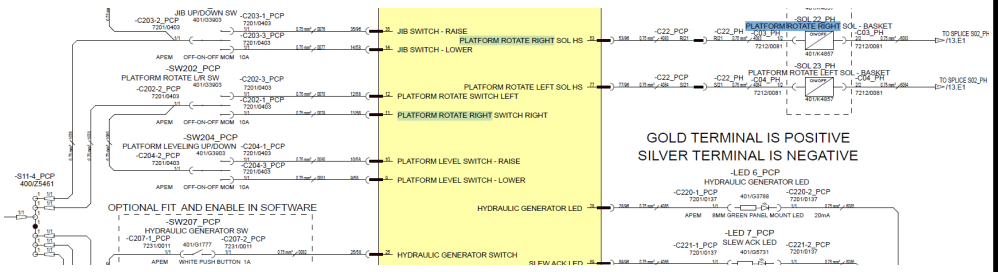

5.1.147 B1170-16

Error code:	**B1170-16**
ECU	Platform ECU
Description:	PLATFORM ROTATE RIGHT Solenoid Valve Short Circuit to Low
Component:	Platform rotate right solenoid
Vehicle reaction:	Detect failure modes. Don’t disable any output and don’t ignore any input
Possible Cause:	1 A short circuit within the wiring harness 2. A short circuit to the chassis

© 2025 Enter your company name

	3. A short circuit within the harness connectors 4. Water damage/ingress within the harness connectors 5. Damaged component
Service Action:	1. Fault indicates short to high or open circuit to Platform rotate right Solenoid. Check voltage at solenoid connector -C03_PH pin 1/2 greater than 10.5 volt and check coil resistance. 2. Check continuity of GND path from Solenoid connector -C03_PH pin 2/2 to Turntable GND & Check Ground wire 6083. 3. Check Interconnect -C22_PCP / -C22_PH pin R/21. Check bent / backed out pins, debris, shorts or water ingress. 4. Check Platform ECU terminal 53/96. Check Connector for bent / backed out pins, debris, shorts or water ingress. 5. Check wire #4083 for continuity from Platform ECU pin 53/96 to Platform rotate right Solenoid connector -C03_PH pin 1/2. 6. Check the harness for any abrasions, pinching or any other damage that may lead to a fault. 7. Check if valve is mechanically jammed 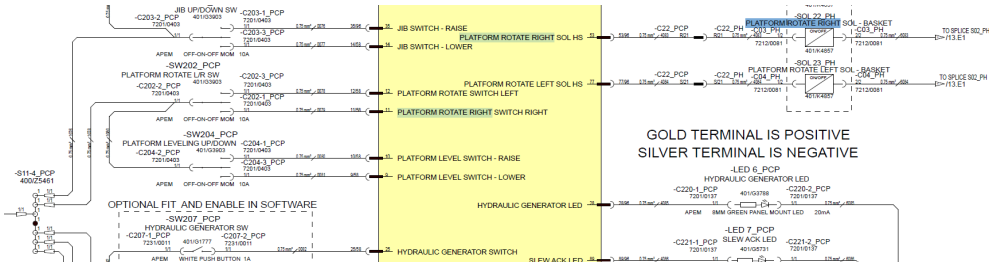

5.1.148 B1171-13

Error code:	**B1171-13**
ECU	Platform ECU
Description:	JIB RAISE Solenoid Valve short circuit to high or open circuit
Component:	JIB RAISE Solenoid Valve
Vehicle reaction:	Detect failure modes. Don't disable any output and don't ignore any input
Possible Cause:	1. A short circuit within the wiring harness 2. A short circuit to the chassis 3. A short circuit within the harness connectors

© 2025 Enter your company name

	4. Water damage/ingress within the harness connectors 5. Damaged component
Service Action:	1. Fault indicates short to high or open circuit to JIB RAISE Solenoid. Check voltage at solenoid connector -C02_PH pin 1/2 greater than 10.5 volt and check coil resistance. 2. Check continuity of GND path from Solenoid connector -C02_PH pin 2/2 to Turntable GND & Check Ground wire 6082. 3. Check Interconnect -C22_PCP / -C22_PH pin P/21. Check bent / backed out pins, debris, shorts or water ingress. 4. Check Platform ECU terminal 78/96. Check Connector for bent / backed out pins, debris, shorts or water ingress. 5. Check wire #4082 for continuity from Platform ECU pin 78/96 to JIB RAISE Solenoid connector -C02_PH pin 1/2. 6. Check the harness for any abrasions, pinching or any other damage that may lead to a fault. 7. Check if valve is mechanically jammed 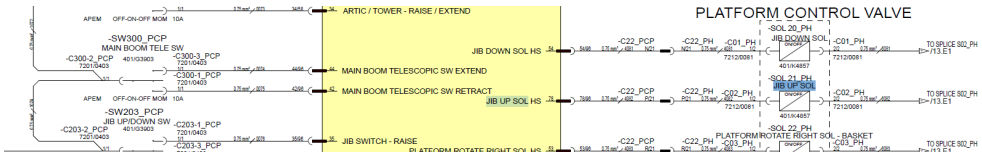

5.1.149 B1172-16

Error code:	**B1172-16**
ECU	Platform ECU
Description:	JIB RAISE Solenoid Valve Short Circuit to Low
Component:	JIB RAISE Solenoid Valve
Vehicle reaction:	Detect failure modes. Don’t disable any output and don’t ignore any input
Possible Cause:	1. A short circuit within the wiring harness 2. A short circuit to the chassis 3. A short circuit within the harness connectors 4. Water damage/ingress within the harness connectors 5. Damaged component

© 2025 Enter your company name

Service Action:	1. Fault indicates short to high or open circuit to JIB RAISE Solenoid. Check voltage at solenoid connector -C02_PH pin 1/2 greater than 10.5 volt and check coil resistance. 2. Check continuity of GND path from Solenoid connector -C02_PH pin 2/2 to Turntable GND & Check Ground wire 6082. 3. Check Interconnect -C22_PCP / -C22_PH pin P/21. Check bent / backed out pins, debris, shorts or water ingress. 4. Check Platform ECU terminal 78/96. Check Connector for bent / backed out pins, debris, shorts or water ingress. 5. Check wire #4082 for continuity from Platform ECU pin 78/96 to JIB RAISE Solenoid connector -C02_PH pin 1/2. 6. Check the harness for any abrasions, pinching or any other damage that may lead to a fault. 7. Check if valve is mechanically jammed 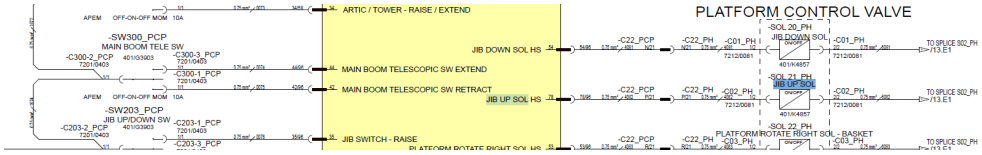

5.1.150 B1173-13

Error code:	**B1173-13**
ECU	Platform ECU
Description:	JIB LOWER Solenoid Valve short circuit to high or open circuit
Component:	JIB LOWER Solenoid Valve
Vehicle reaction:	Detect failure modes. Don't disable any output and don't ignore any input
Possible Cause:	1. A short circuit within the wiring harness 2. A short circuit to the chassis 3. A short circuit within the harness connectors 4. Water damage/ingress within the harness connectors 5. Damaged component
Service Action:	1. Fault indicates short to high or open circuit to JIB LOWER Solenoid. Check voltage at solenoid connector -C01_PH pin 1/2 greater than 10.5 volt and check coil resistance. 2. Check continuity of GND path from Solenoid connector -C01_PH pin 2/2 to Turntable GND & Check Ground wire 6081.

© 2025 Enter your company name

	3. Check Interconnect -C22_PCP / -C22_PH pin N/21. Check bent / backed out pins, debris, shorts or water ingress. 4. Check Platform ECU terminal 54/96. Check Connector for bent / backed out pins, debris, shorts or water ingress. 5. Check wire #4081 for continuity from Platform ECU pin 54/96 to JIB LOWER Solenoid connector -C01_PH pin 1/2. 6. Check the harness for any abrasions, pinching or any other damage that may lead to a fault. 7. Check if valve is mechanically jammed 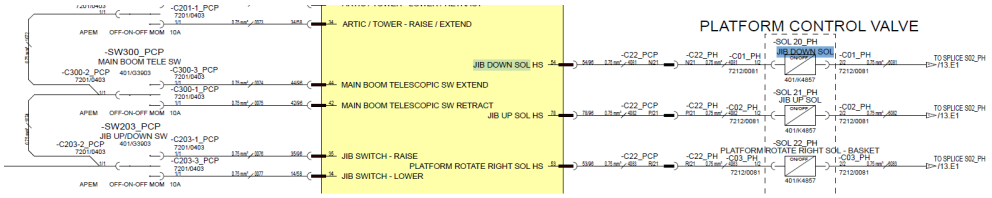

5.1.151 B1174-16

Error code:	B1174-16
ECU	Platform ECU
Description:	JIB LOWER Solenoid Valve Short Circuit to Low
Component:	JIB LOWER Solenoid Valve
Vehicle reaction:	Detect failure modes. Don't disable any output and don't ignore any input
Possible Cause:	1. A short circuit within the wiring harness 2. A short circuit to the chassis 3. A short circuit within the harness connectors 4. Water damage/ingress within the harness connectors 5. Damaged component
Service Action:	1. Fault indicates short to high or open circuit to JIB LOWER Solenoid. Check voltage at solenoid connector -C01_PH pin 1/2 greater than 10.5 volt and check coil resistance. 2. Check continuity of GND path from Solenoid connector -C01_PH pin 2/2 to Turntable GND & Check Ground wire 6081. 3. Check Interconnect -C22_PCP / -C22_PH pin N/21. Check bent / backed out pins, debris, shorts or water ingress. 4. Check Platform ECU terminal 54/96. Check Connector for bent / backed out pins, debris, shorts or water ingress.

© 2025 Enter your company name

	5. Check wire #4081 for continuity from Platform ECU pin 54/96 to JIB LOWER Solenoid connector -C01_PH pin 1/2. 6. Check the harness for any abrasions, pinching or any other damage that may lead to a fault. 7. Check if valve is mechanically jammed 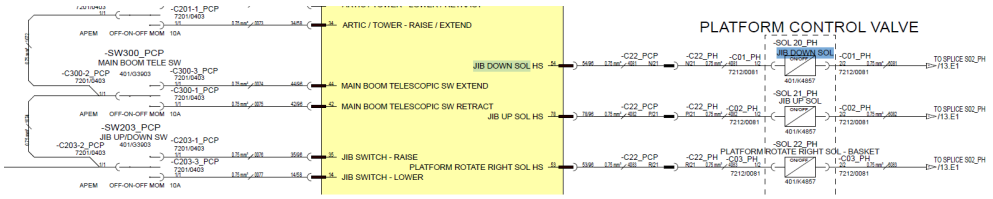

5.1.152 B1175-13

Error code:	B1175-13
ECU	Base ECU
Description:	MAIN BOOM LIFT/SLEW DIRECTIONAL Solenoid Valve Short Circuit to High or Open Circuit
Component:	MAIN BOOM LIFT/SLEW DIRECTIONAL Solenoid Valve
Vehicle reaction:	Detect failure modes. Don't disable any output and don't ignore any input
Possible Cause:	1. A short circuit within the wiring harness 2. A short circuit to the chassis 3. A short circuit within the harness connectors 4. Water damage/ingress within the harness connectors 5. Damaged component
Service Action:	1. Fault indicates short to high or open circuit to MAIN BOOM LIFT/SLEW DIRECTIONAL Solenoid. Check voltage at solenoid connector -C13_TH pin 1/2 greater than 10.5 volt and check coil resistance. 2. Check continuity of GND path from Solenoid connector -C13_TH pin 2/2 to Turntable GND & Check Ground wire 6062. 3. Check bent / backed out pins, debris, shorts or water ingress. 4. Check Base ECU terminal 1/96. Check Connector for bent / backed out pins, debris, shorts or water ingress. 5. Check wire #4062 for continuity from Base ECU pin 1/96 to MAIN BOOM LIFT/SLEW DIRECTIONAL Solenoid connector -C13_PH pin 1/2. 6. Check the harness for any abrasions, pinching or any other damage that may lead to a fault.

© 2025 Enter your company name

	7. Check if valve is mechanically jammed. 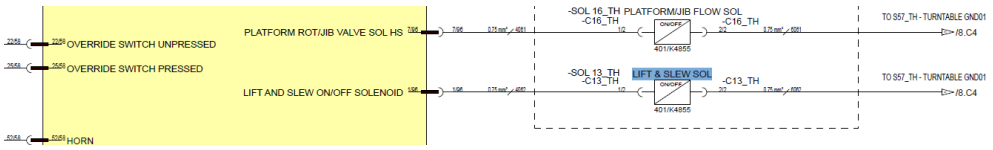

5.1.153 B1176-16

Error code:	B1176-16
ECU	Base ECU
Description:	MAIN BOOM LIFT/SLEW DIRECTIONAL Solenoid Valve Short Circuit to Low
Component:	MAIN BOOM LIFT/SLEW DIRECTIONAL Solenoid Valve
Vehicle reaction:	Detect failure modes. Don't disable any output and don't ignore any input
Possible Cause:	1. A short circuit within the wiring harness 2. A short circuit to the chassis 3. A short circuit within the harness connectors 4. Water damage/ingress within the harness connectors 5. Damaged component
Service Action:	1. Fault indicates short to high or open circuit to MAIN BOOM LIFT/SLEW DIRECTIONAL Solenoid. Check voltage at solenoid connector -C13_TH pin 1/2 greater than 10.5 volt and check coil resistance. 2. Check continuity of GND path from Solenoid connector -C13_TH pin 2/2 to Turntable GND & Check Ground wire 6062. 3. Check bent / backed out pins, debris, shorts or water ingress. 4. Check Base ECU terminal 1/96. Check Connector for bent / backed out pins, debris, shorts or water ingress. 5. Check wire #4062 for continuity from Base ECU pin 1/96 to MAIN BOOM LIFT/SLEW DIRECTIONAL Solenoid connector -C13_PH pin 1/2. 6. Check the harness for any abrasions, pinching or any other damage that may lead to a fault. 7. Check if valve is mechanically jammed. 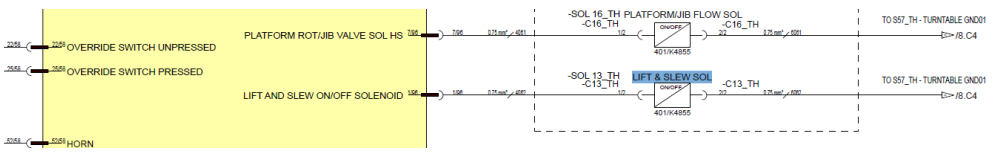

© 2025 Enter your company name

5.1.154 B1177-16

Error code:	B1177-16
ECU	Base ECU
Description :	BUZZER Short Circuit to Low
Component :	Buzzer
Vehicle reaction:	Detect failure mode.
Possible Cause:	1. A short circuit within the wiring harness 2. A short circuit to the chassis 3. A short circuit within the harness connectors 4. Water damage/ingress within the harness connectors 5. Damaged component
Service Action:	1. Check condition of Wire #4024 from Base Bosch ECU Pin 90/96 to Panel Interconnect -C50_TH. Check condition of wire 4024 from Panel interconnect -C50_TCP to Buzzer holder -RB07_TCP pin 1. 2. Check above wires for any shorts to GND / Chassis. Look for damage to harness, especially abrasions and pinching. 3. Check the interconnects for debris or stray wire etc that may cause short circuit. Check Buzzer holder -RB07_TCP. Check Bosch ECU connectors for bent pins or debris / stray wires. 4. Check all above connectors for water damage. 5. Remove buzzer and check wire resistance again, check buzzer for damage.  

© 2025 Enter your company name

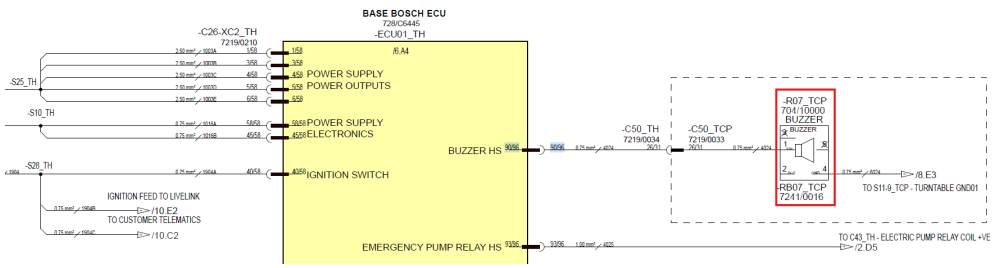

5.1.155 B1178-13

Error code:	B1178-13
ECU	Base ECU
Description:	BUZZER Open Circuit OR Short Circuit to High
Component:	Buzzer
Vehicle reaction:	Detect failure mode.
Possible Cause:	1. A short circuit within the wiring harness 2. A short circuit within the harness connectors 3. Water damage/ingress within the harness connectors 4. Damaged component
Service Action:	1. Check condition of Wire #4024 from Base Bosch ECU Pin 90/96 to Panel Interconnect -C50_TH. Check condition of wire 4024 from Panel interconnect -C50_TCP to Buzzer holder -RB07_TCP pin 1. 2. Check the interconnects for debris or stray wire etc that may cause short circuit. Check Buzzer holder -RB07_TCP. Check Bosch ECU connectors for bent pins or debris / stray wires. 3. Check all above connectors for water damage. 4. Check above wires for any shorts to High (>10V). Look for damage to harness, especially abrasions and pinching. Remove buzzer and check wire resistance again, check buzzer for damage.

© 2025 Enter your company name

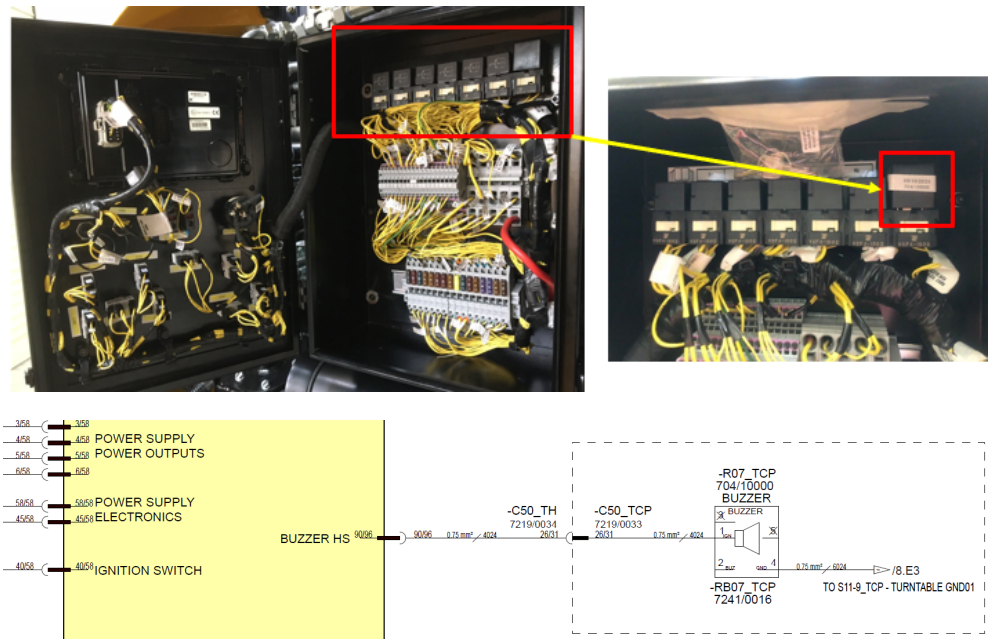

5.1.156 B1179-13

Error code:	B1179-13
ECU	Base ECU
Description:	Beacon(s) - Beacon 1 Open Circuit or Short Circuit to High.
Component:	Beacon 1
Vehicle reaction:	Detect failure mode.
Possible Cause:	1. A short or open circuit within the wiring harness 2. A short circuit within the harness connectors 3. Water damage/ingress within the harness connectors 4. Damaged component
Service Action:	1. Check continuity between Beacon 1 connector -C20_TH pin 1/2 and Base Bosch ECU -C26-XC2_TH Pin 43/58 (Wire #4032). Check Wire #4032 not short circuit to high. 2. Check Beacon connector and ECU Connectors. Ensure no bent pins or stray wire causing short circuit. Ensure wires correctly terminated. 3. Check Beacon connector and ECU Connectors for any water ingress. 4. Check Beacon for any damage.

© 2025 Enter your company name



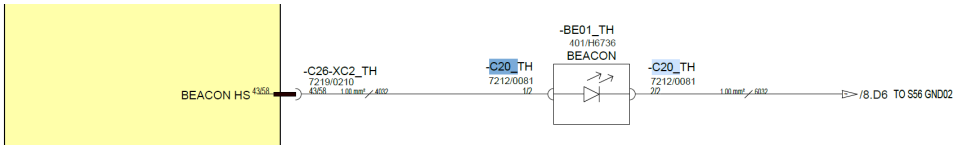

5.1.157 B1180-16

Error code:	B1180-16
ECU	Base ECU
Description:	Beacon(s) - Beacon 1 Short Circuit to Low.
Component:	Beacon 1
Vehicle reaction:	Detect failure mode.
Possible Cause:	1. A short circuit within the wiring harness 2. A short circuit to the chassis 3. A short circuit within the harness connectors 4. Water damage/ingress within the harness connectors 5. Damaged component
Service Action:	1. Check continuity between Beacon 1 connector -C20_TH pin 1/2 and Base Bosch ECU -C26-XC2_TH Pin 43/58 (Wire #4032). 2. Check Wire #4032 not short circuit to GND. Check for abrasions and pinching of the harness. 3. Check Beacon connector and ECU Connectors. Ensure no bent pins or stray wire causing short circuit. Ensure wires correctly terminated. 4. Check Beacon connector and ECU Connectors for any water ingress. 5. Check Beacon for any damage.

© 2025 Enter your company name



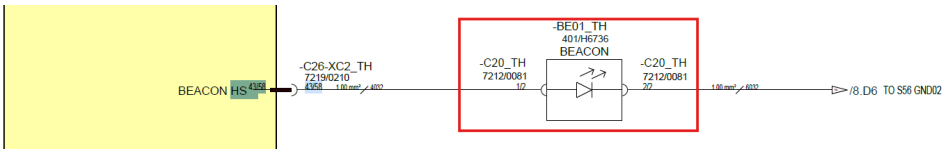

5.1.158 B1181-16

Error code:	B1181-16
ECU	Base ECU
Description:	Horn - Horn High Side Short Circuit to Low.
Component:	Horn Relay
Vehicle reaction:	Detect failure mode.
Possible Cause:	1. A short circuit within the wiring harness 2. A short circuit to the chassis 3. A short circuit within the harness connectors 4. Water damage/ingress within the harness connectors 5. Damaged component
Service Action:	1. Check wiring between 'C26-XC2_TH Pin 44/58 on the Bosch Base ECU Connector' and 'Pin 4 on the Horn Relay Base'. 2. Check the wiring has not shorted to the chassis of the machine (caused perhaps by pinching or abrasion). 3. Disconnect 'C26-XC2_TH Bosch Base ECU Connector' and check terminal 44/58 ensuring that nothing is touching it. Same with Pin 4 at the Horn Relay

© 2025 Enter your company name

	Base. 4. Check connectors are dry and free of debris. Check for damaged pins on the 'C26-XC2_TH Bosch Base ECU Connector'. 5. Check operation of the system. Check for physical damage to the Horn Relay, connectors and other harness components. 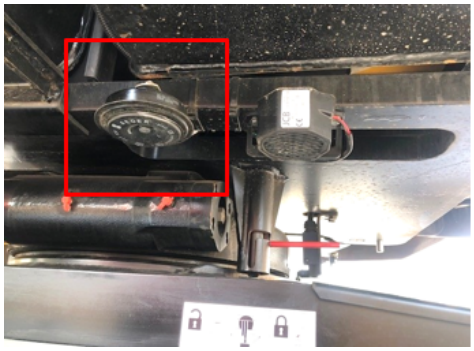 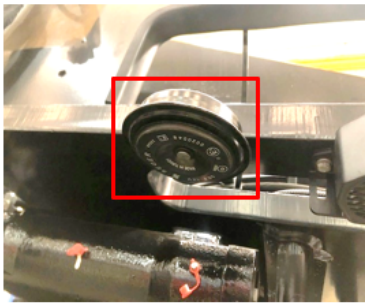 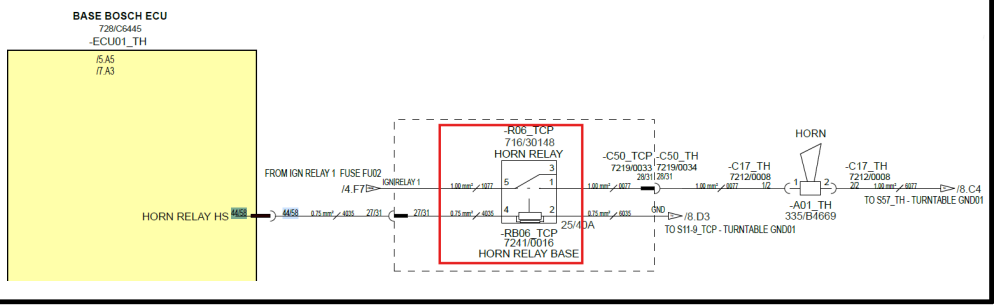

5.1.159 B1182-13

Error code:	B1182-13
ECU	Base ECU
Description:	Horn - Horn High Side Open Circuit.
Component:	Horn Relay
Vehicle reaction:	Detect failure mode.
Possible Cause:	1. A poor connection or damaged terminal within the connector(s) 2. A damaged or broken wire within the wiring harness 3. Component is damaged
Service Action:	1. Ensure all terminals are seated correctly with no damage at 'C26-XC2_TH Pin 44/58 on the Bosch Base ECU Connector' and 'Pin 4 on the Horn Relay Base'.

© 2025 Enter your company name

	2. Check for continuity with a multimeter between 'C26-XC2_TH Pin 44/58 on the Bosch Base ECU Connector' and 'Pin 4 on the Horn Relay Base'. 3. Check operation of the system. Check for physical damage to the Horn Relay, connectors and other harness components.  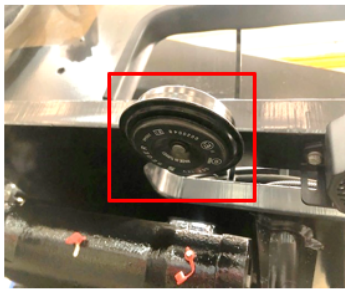 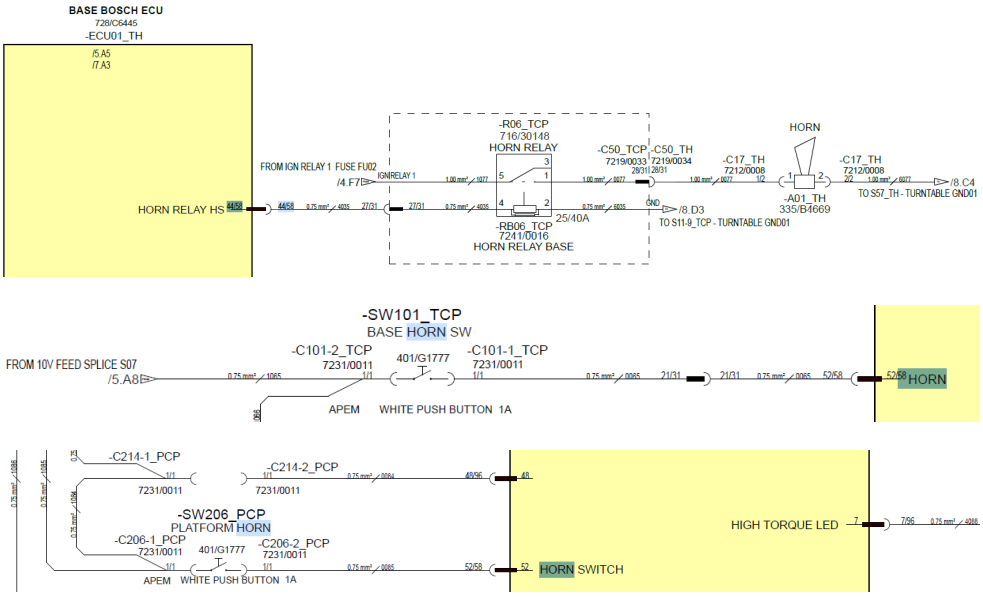

5.1.160 B1183-16

Error code:	B1183-16
ECU	Base ECU
Description:	White Noise Alarm - White Noise Alarm Short Circuit to Low.
Component:	White Noise Alarm

© 2025 Enter your company name

Vehicle reaction:	Detect failure mode.
Possible Cause:	1. A short circuit within the wiring harness 2. A short circuit to the chassis 3. A short circuit within the harness connectors 4. Water damage/ingress within the harness connectors 5. Damaged component
Service Action:	1. Check wiring (#4036) between 'C26-XC2_TH Pin 56/58 on the Bosch Base ECU Connector' and 'C34_TH on the White Noise Alarm'. 2. Check the wiring (#4036) has not shorted to the chassis of the machine (caused perhaps by pinching or abrasion). 3. Disconnect 'C26-XC2_TH Bosch Base ECU Connector' and check terminal 56/58 ensuring that nothing is touching it. Same with 'C34_TH on the White Noise Alarm'. 4. Check connectors are dry and free of debris. Check for damaged pins on the 'C26-XC2_TH Bosch Base ECU Connector'. 5. Check operation of the system. Check for physical damage to the White Noise Alarm, connectors and other harness components. 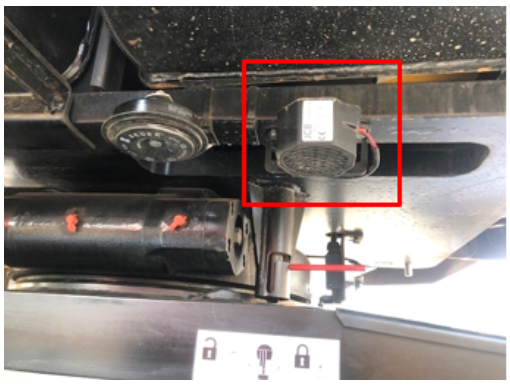 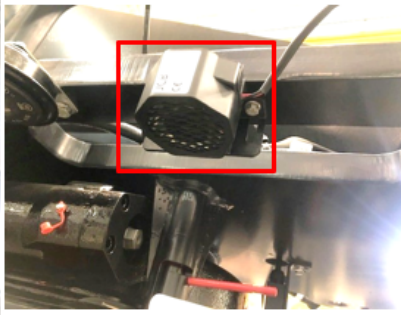 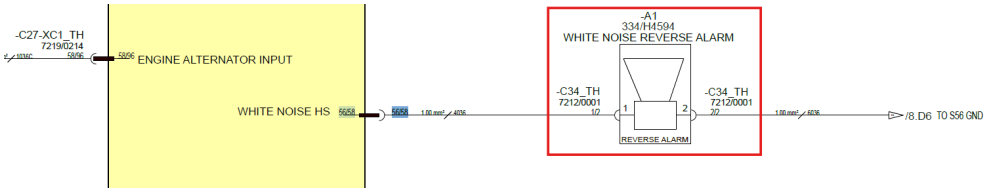

5.1.161 **B1184-13**

Error code:	**B1184-13**
ECU	Base ECU
Description:	White Noise Alarm - White Noise Alarm Open Circuit or Short Circuit to High.

© 2025 Enter your company name

Component :	White Noise Alarm
Vehicle reaction:	Detect failure mode.
Possible Cause:	1. A short or open circuit within the wiring harness 2. A short circuit within the harness connectors 3. Water damage/ingress within the harness connectors 4. Damaged component
Service Action:	1. Check continuity between White Noise Alarm C34_TH pin 1/2 and Base Bosch ECU -C26-XC2_TH Pin 56/58 (Wire #4036). Check Wire #4036 not short circuit to high. 2. Check White Noise Alarm connector and ECU Connectors. Ensure no bent pins or stray wire causing short circuit. Ensure wires correctly terminated. 3. Check White Noise Alarm connector and ECU Connectors for any water ingress. 4. Check White Noise Alarm for any damage. 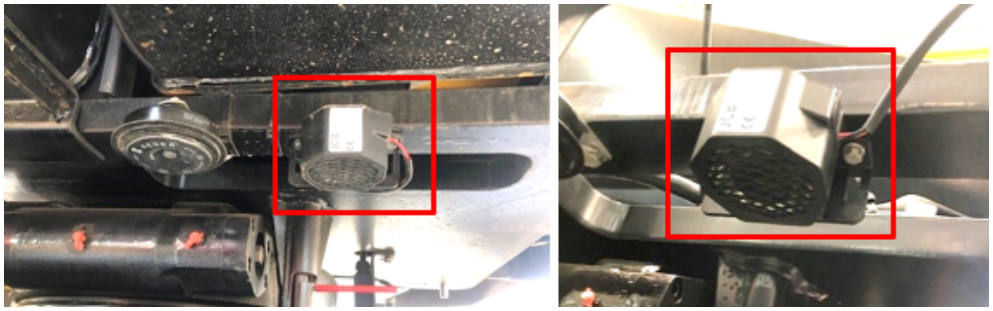 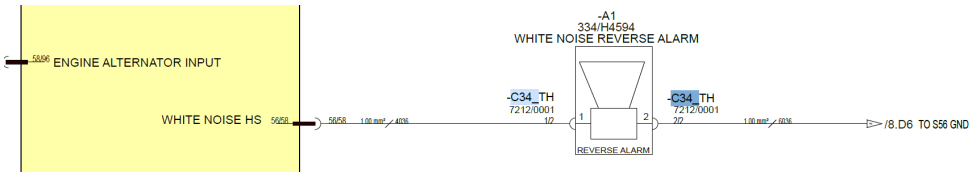

5.1.162 B1186-16

Error code:	**B1186-16**
ECU	Platform ECU
Description :	HYDRAULIC GENERATOR LED Short Circuit to Low

© 2025 Enter your company name

Component :	HYDRAULIC GENERATOR LED
Vehicle reaction:	Detect failure mode.
Possible Cause:	1. A short circuit within the wiring harness 2. A short circuit within the harness connectors 3. Water damage/ingress within the harness connectors 4. Damaged component
Service Action:	1. Check voltage at LED Light connector -C220-1_PCP pin 1/1 greater than 10.5 volt. 2. Check continuity of GND path from LED light connector C-220-2_PCP pin 2/2 to Turntable GND & Check Ground wire 6085. 3. Check bent / backed out pins, debris, shorts or water ingress. 4. Check Platform ECU terminal 28/96. Check Connector for bent / backed out pins, debris, shorts or water ingress. 5. Check wire #4085 for continuity from Platform ECU pin 28/96 to LED light connector -C220-1_PCP pin 1/2. 6. Check the harness for any abrasions, pinching or any other damage that may lead to a fault. 7 .If there is continuity and we are getting 10V supply then it may be internal damage to LED light. 8. If issue still there replace the LED light. 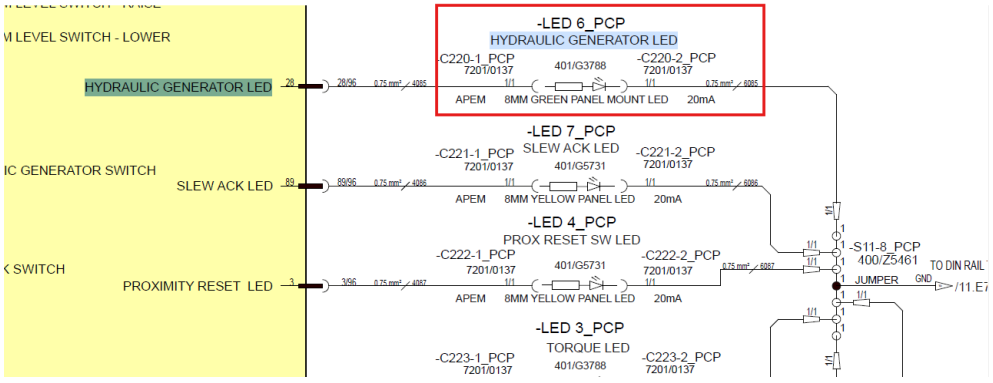

5.1.163 B1187-13

Error code:	**B1187-13**
ECU	Platform ECU

© 2025 Enter your company name

Description :	HYDRAULIC GENERATOR LED Open Circuit
Component :	HYDRAULIC GENERATOR LED
Vehicle reaction:	Detect failure mode.
Possible Cause:	1. A short circuit within the wiring harness 2. A short circuit within the harness connectors 3. Water damage/ingress within the harness connectors 4. Damaged component
Service Action:	1. Check voltage at LED Light connector -C220-1_PCP pin 1/1 greater than 10.5 volt. 2. Check continuity of GND path from LED light connector C-220-2_PCP pin 2/2 to Turntable GND & Check Ground wire 6085. 3. Check bent / backed out pins, debris, shorts or water ingress. 4. Check Platform ECU terminal 28/96. Check Connector for bent / backed out pins, debris, shorts or water ingress. 5. Check wire #4085 for continuity from Platform ECU pin 28/96 to LED light connector -C220-1_PCP pin 1/2. 6. Check the harness for any abrasions, pinching or any other damage that may lead to a fault. 7 .If there is continuity and we are getting 10V supply then it may be internal damage to LED light. 8. If issue still there replace the LED light. 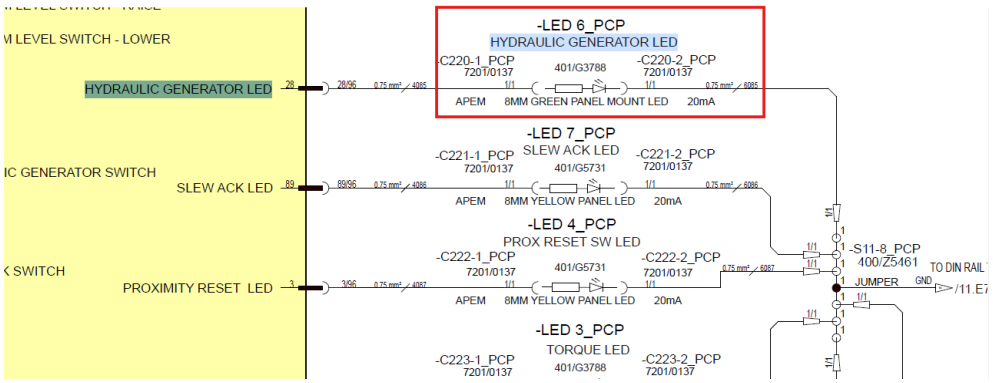

5.1.164 B1188-16

Error code:	**B1188-16**

© 2025 Enter your company name

ECU	Platform ECU
Description :	Caution LED short circuit to low
Component :	Caution LED
Vehicle reaction:	Detect failure mode
Possible Cause:	1. A short circuit within the wiring harness 2. A short circuit within the harness connectors 3. Water damage/ingress within the harness connectors 4. Damaged component
Service Action:	1. Check voltage at LED Light connector -C38-1_PCP pin 1/1 greater than 10.5 volt. 2. Check continuity of GND path from LED light connector C-38-2_PCP pin 2/2 to Turntable GND & Check Ground wire 6077. 3. Check bent / backed out pins, debris, shorts or water ingress. 4. Check Platform ECU terminal 6/96. Check Connector for bent / backed out pins, debris, shorts or water ingress. 5. Check wire #4077 for continuity from Platform ECU pin 6/96 to LED light connector -C38-1_PCP pin 1/2. 6. Check the harness for any abrasions, pinching or any other damage that may lead to a fault. 7 .If there is continuity and we are getting 10V supply then it may be internal damage to LED light. 8. If issue still there replace the LED light. 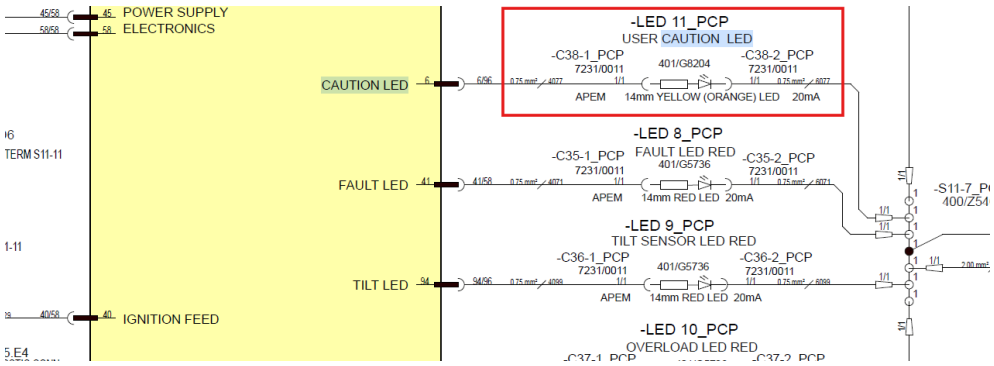

5.1.165 **B1189-13**

Error code:	**B1189-13**

© 2025 Enter your company name

ECU	Platform ECU
Description :	Caution LED open circuit
Component :	Caution LED
Vehicle reaction:	Detect failure mode
Possible Cause:	1. A short circuit within the wiring harness 2. A short circuit within the harness connectors 3. Water damage/ingress within the harness connectors 4. Damaged component
Service Action:	1. Check voltage at LED Light connector -C38-1_PCP pin 1/1 greater than 10.5 volt. 2. Check continuity of GND path from LED light connector C-38-2_PCP pin 2/2 to Turntable GND & Check Ground wire 6077. 3. Check bent / backed out pins, debris, shorts or water ingress. 4. Check Platform ECU terminal 6/96. Check Connector for bent / backed out pins, debris, shorts or water ingress. 5. Check wire #4077 for continuity from Platform ECU pin 6/96 to LED light connector -C38-1_PCP pin 1/2. 6. Check the harness for any abrasions, pinching or any other damage that may lead to a fault. 7 .If there is continuity and we are getting 10V supply then it may be internal damage to LED light. 8. If issue still there replace the LED light. 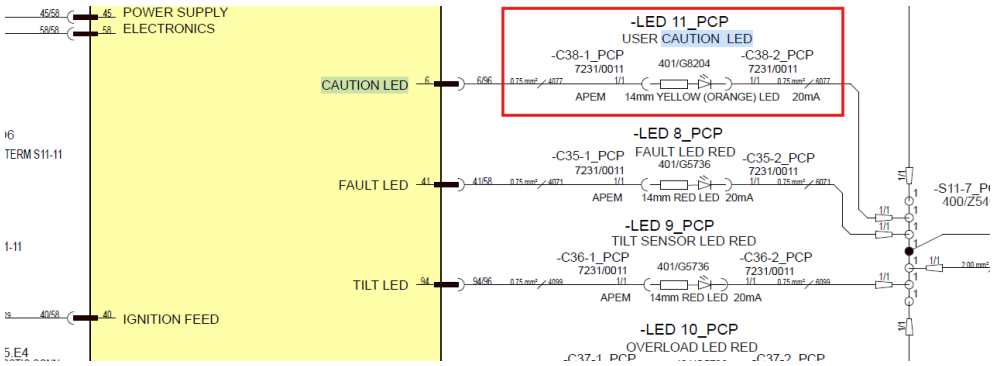

5.1.166 **B1190-16**

Error code:	**B1190-16**

© 2025 Enter your company name

ECU	Platform ECU
Description:	Fault Indicator - Fault LED Short Circuit to Low.
Component:	Fault LED
Vehicle reaction:	Detect failure mode.
Possible Cause:	1. A short circuit within the wiring harness 2. A short circuit to the chassis 3. A short circuit within the harness connectors 4. Water damage/ingress within the harness connectors 5. Damaged component
Service Action:	1. Check wiring between 'C26-XC2_PCP Pin 41/58 on the Bosch Platform ECU Connector' and 'C35-1_PCP on the Fault LED'. 2. Check the wiring has not shorted to the chassis of the machine (caused perhaps by pinching or abrasion). 3. Disconnect 'C26-XC2_PCP Bosch Platform ECU Connector' and check terminal 41/58 ensuring that nothing is touching it. Same with 'C35-1_PCP on the Fault LED'. 4. Check connectors are dry and free of debris. Check for damaged pins on the 'C26-XC2_PCP Bosch Platform ECU Connector'. 5. Check operation of the system. Check for physical damage to the Fault LED, connectors and other harness components.  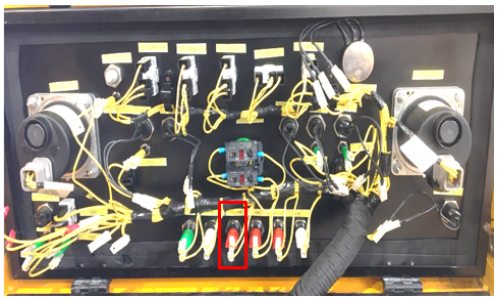

© 2025 Enter your company name

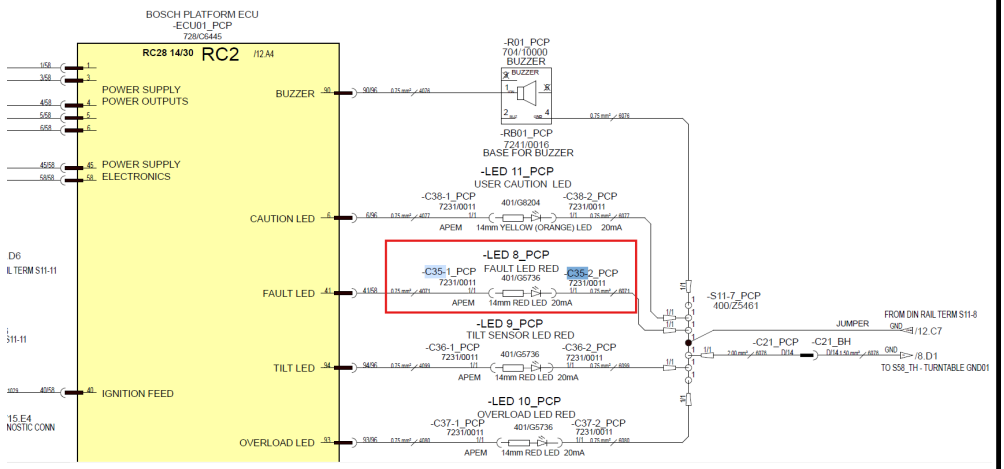

5.1.167 B1191-17

Error code:	B1191-17
ECU	Platform ECU
Description:	Fault Indicator - Fault LED Short Circuit to High.
Component:	Fault LED
Vehicle reaction:	Detect failure mode.
Possible Cause:	1. A short circuit within the wiring harness 2. A short circuit within the harness connectors 3. Water damage/ingress within the harness connectors 4. Damaged component
Service Action:	1. Check wiring between 'C26-XC2_PCP Pin 41/58 on the Bosch Platform ECU Connector' and 'C35-1_PCP on the Fault LED'. 2. Disconnect 'C26-XC2_PCP Bosch Platform ECU Connector' and check terminal 41/58 ensuring that nothing is touching it. Same with 'C35-1_PCP on the Fault LED'. 3. Check connectors are dry and free of debris. Check for damaged terminals on the 'C26-XC2_PCP Bosch Platform ECU Connector'. 4. Check operation of the system. Check for physical damage to the LED, connectors and other harness components.

© 2025 Enter your company name



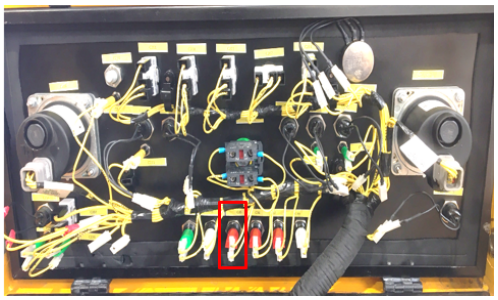

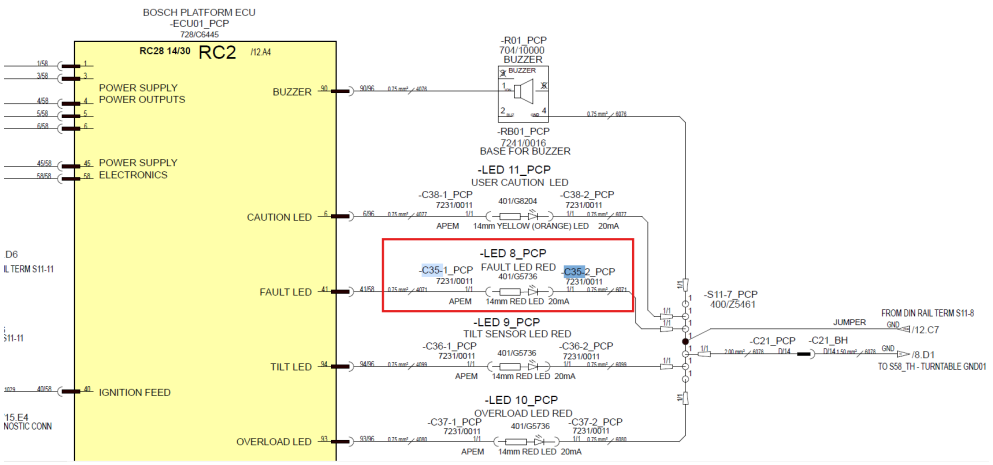

5.1.168 B1192-16

Error code:	B1192-16
ECU	Platform ECU
Description:	Tilt LED short circuit to low
Component:	Tilt LED
Vehicle reaction:	Detect failure mode
Possible Cause:	1. A short circuit within the wiring harness 2. A short circuit within the harness connectors 3. Water damage/ingress within the harness connectors 4. Damaged component
Service Action:	1. Check voltage at LED Light connector -C36-1_PCP pin 1/1 greater than 10.5 volt. 2. Check continuity of GND path from LED light connector C-36-2_PCP pin 2/2 to Turntable GND & Check Ground wire 6099.

© 2025 Enter your company name

	3. Check bent / backed out pins, debris, shorts or water ingress. 4. Check Platform ECU terminal 6/96. Check Connector for bent / backed out pins, debris, shorts or water ingress. 5. Check wire #4099 for continuity from Platform ECU pin 94/96 to LED light connector -C36-1_PCP pin 1/2. 6. Check the harness for any abrasions, pinching or any other damage that may lead to a fault. 7 .If there is continuity and we are getting 10V supply then it may be internal damage to LED light. 8. If issue still there replace the LED light. 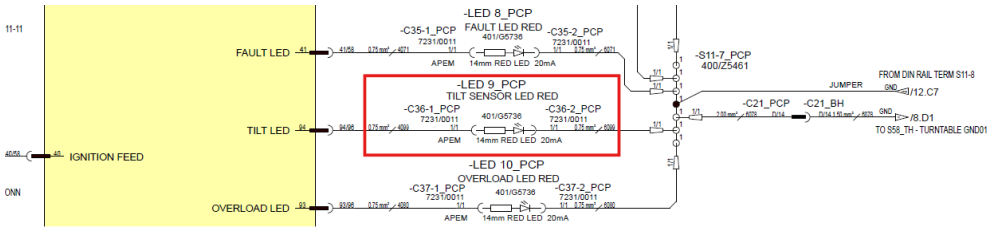

5.1.169 B1193-13

Error code:	**B1193-13**
ECU	Platform ECU
Description :	Tilt LED open circuit
Component :	Tilt LED
Vehicle reaction:	Detect failure mode
Possible Cause:	1. A short circuit within the wiring harness 2. A short circuit within the harness connectors 3. Water damage/ingress within the harness connectors 4. Damaged component
Service Action:	1. Check voltage at LED Light connector -C36-1_PCP pin 1/1 greater than 10.5 volt. 2. Check continuity of GND path from LED light connector C-36-2_PCP pin 2/2 to Turntable GND & Check Ground wire 6099. 3. Check bent / backed out pins, debris, shorts or water ingress. 4. Check Platform ECU terminal 6/96. Check Connector for bent / backed out

© 2025 Enter your company name

	pins, debris, shorts or water ingress. 5. Check wire #4099 for continuity from Platform ECU pin 94/96 to LED light connector -C36-1_PCP pin 1/2. 6. Check the harness for any abrasions, pinching or any other damage that may lead to a fault. 7 .If there is continuity and we are getting 10V supply then it may be internal damage to LED light. 8. If issue still there replace the LED light. 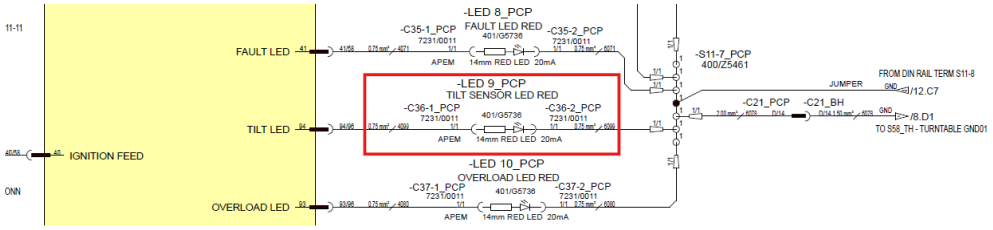

5.1.170 B1194-16

Error code:	B1194-16
ECU	Platform ECU
Description:	Overload LED short circuit to low
Component:	Overload LED
Vehicle reaction:	Detect failure mode
Possible Cause:	1. A short circuit within the wiring harness 2. A short circuit within the harness connectors 3. Water damage/ingress within the harness connectors 4. Damaged component
Service Action:	1. Check voltage at LED Light connector -C37-1_PCP pin 1/1 greater than 10.5 volt. 2. Check continuity of GND path from LED light connector C-37-2_PCP pin 2/2 to Turntable GND & Check Ground wire 6080. 3. Check bent / backed out pins, debris, shorts or water ingress. 4. Check Platform ECU terminal 93/96. Check Connector for bent / backed out pins, debris, shorts or water ingress. 5. Check wire #4080 for continuity from Platform ECU pin 93/96 to LED light

© 2025 Enter your company name

	connector -C37-1_PCP pin 1/2. 6. Check the harness for any abrasions, pinching or any other damage that may lead to a fault. 7 .If there is continuity and we are getting 10V supply then it may be internal damage to LED light. 8. If issue still there replace the LED light. 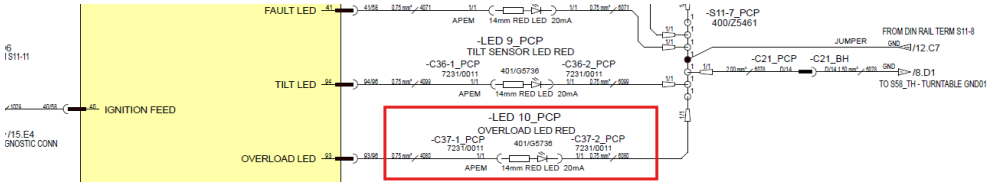

5.1.171 B1195-13

Error code:	**B1195-13**
ECU	Platform ECU
Description :	Overload LED open circuit
Component :	Overload LED
Vehicle reaction:	Detect failure mode
Possible Cause:	1. A short circuit within the wiring harness 2. A short circuit within the harness connectors 3. Water damage/ingress within the harness connectors 4. Damaged component
Service Action:	1. Check voltage at LED Light connector -C37-1_PCP pin 1/1 greater than 10.5 volt. 2. Check continuity of GND path from LED light connector C-37-2_PCP pin 2/2 to Turntable GND & Check Ground wire 6080. 3. Check bent / backed out pins, debris, shorts or water ingress. 4. Check Platform ECU terminal 93/96. Check Connector for bent / backed out pins, debris, shorts or water ingress. 5. Check wire #4080 for continuity from Platform ECU pin 93/96 to LED light connector -C37-1_PCP pin 1/2. 6. Check the harness for any abrasions, pinching or any other damage that may lead to a fault.

© 2025 Enter your company name

	7 .If there is continuity and we are getting 10V supply then it may be internal damage to LED light. 8. If issue still there replace the LED light. 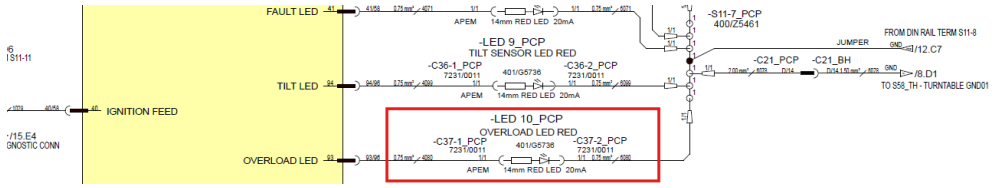

5.1.172 B1196-16

Error code:	B1196-16
ECU	Platform ECU
Description:	Low fuel LED short circuit to low
Component:	Low fuel LED
Vehicle reaction:	Detect failure mode
Possible Cause:	1. A short circuit within the wiring harness 2. A short circuit within the harness connectors 3. Water damage/ingress within the harness connectors 4. Damaged component
Service Action:	1. Check voltage at LED Light connector -C39-1_PCP pin 1/1 greater than 10.5 volt. 2. Check continuity of GND path from LED light connector C-39-2_PCP pin 2/2 to Turntable GND & Check Ground wire 6090. 3. Check bent / backed out pins, debris, shorts or water ingress. 4. Check Platform ECU terminal 42/58. Check Connector for bent / backed out pins, debris, shorts or water ingress. 5. Check wire #4090 for continuity from Platform ECU pin 42/58 to LED light connector -C39-1_PCP pin 1/2. 6. Check the harness for any abrasions, pinching or any other damage that may lead to a fault. 7 .If there is continuity and we are getting 10V supply then it may be internal damage to LED light. 8. If issue still there replace the LED light.

© 2025 Enter your company name

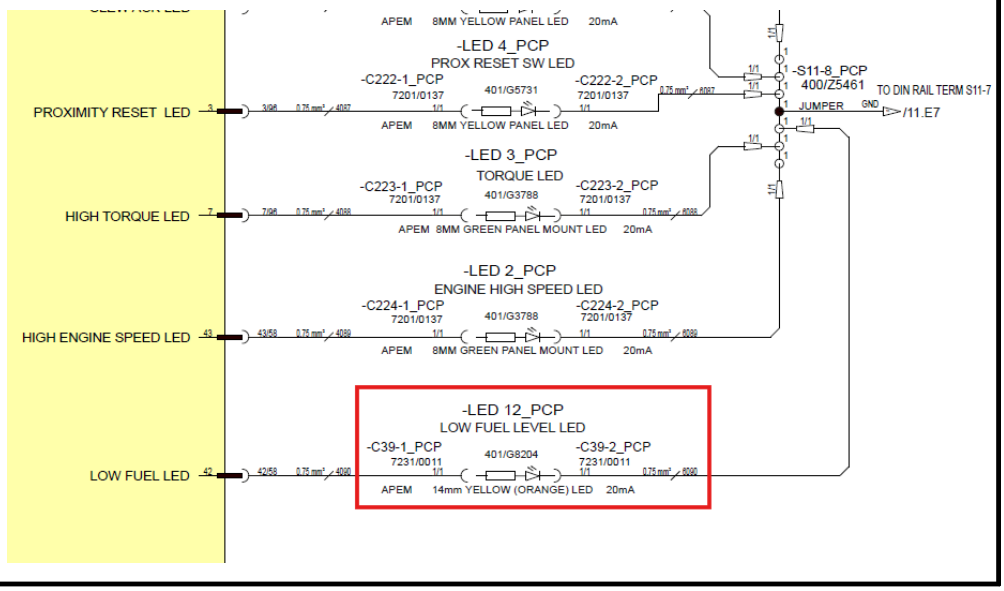

5.1.173 B1197-13

Error code:	B1197-13
ECU	Platform ECU
Description:	Low fuel LED open circuit
Component:	Low fuel LED
Vehicle reaction:	Detect failure mode
Possible Cause:	1. A short circuit within the wiring harness 2. A short circuit within the harness connectors 3. Water damage/ingress within the harness connectors 4. Damaged component
Service Action:	1. Check voltage at LED Light connector -C39-1_PCP pin 1/1 greater than 10.5 volt. 2. Check continuity of GND path from LED light connector C-39-2_PCP pin 2/2 to Turntable GND & Check Ground wire 6090. 3. Check bent / backed out pins, debris, shorts or water ingress. 4. Check Platform ECU terminal 42/58. Check Connector for bent / backed out pins, debris, shorts or water ingress. 5. Check wire #4090 for continuity from Platform ECU pin 42/58 to LED light connector -C39-1_PCP pin 1/2.

© 2025 Enter your company name

	6. Check the harness for any abrasions, pinching or any other damage that may lead to a fault. 7 .If there is continuity and we are getting 10V supply then it may be internal damage to LED light. 8. If issue still there replace the LED light. 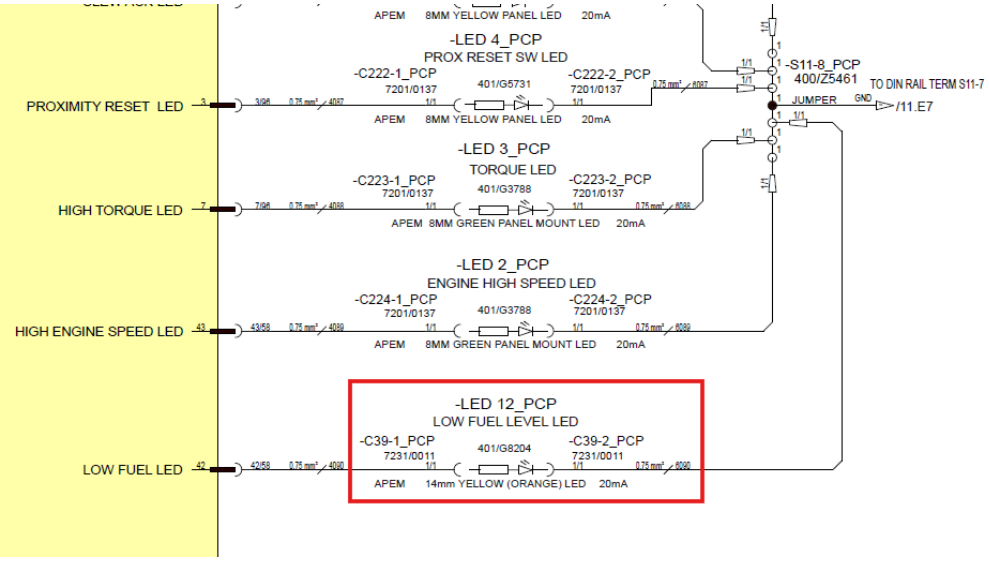

5.1.174 B1198-16

Error code:	B1198-16
ECU	Platform ECU
Description:	Slew Acknowledgment - Slew Acknowledgment LED Short Circuit to Low.
Component:	Slew Acknowledgment LED
Vehicle reaction:	Detect failure mode
Possible Cause:	1. A short circuit within the wiring harness 2. A short circuit to the chassis 3. A short circuit within the harness connectors 4. Water damage/ingress within the harness connectors 5. Damaged component
Service Action:	1. Disconnect connector -C221-1_PCP from the rear of the Slew Acknowledge LED on the Platform Control Panel. Measure resistance from

© 2025 Enter your company name

	Terminal to GND. If a short exists, check wire #4086 to Platform Bosch ECU pin 89/96. 2. Check Wire #4086 is not shorted to GND / Chassis. Check for abrasions and pinching. 3. Check condition of pins in Platform Bosch ECU. Check for Bent pins, debris or stray wires causing a short. 4. Check for water ingress in the Platform Bosch ECU Connectors. 5. Check LED for damage or shorting to connector -C221-2_PCP 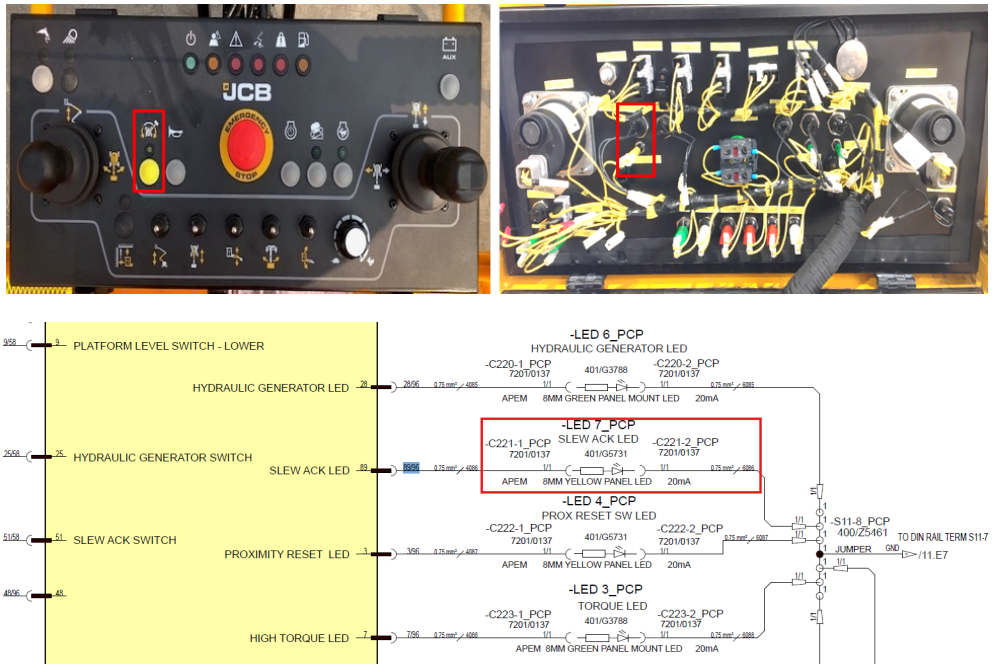

5.1.175 B1199-17

Error code:	B1199-17
ECU	Platform ECU
Description:	Slew Acknowledged - Slew Acknowledgment LED Short Circuit to High.
Component:	Slew Acknowledgment LED
Vehicle reaction:	Detect failure mode.
Possible Cause:	1. A short circuit within the wiring harness 2. A short circuit within the harness connectors 3. Water damage/ingress within the harness connectors 4. Damaged component

© 2025 Enter your company name

Service Action:	1. Disconnect connector -C221-1_PCP from the rear of the Slew Acknowledge LED on the Platform Control Panel. Measure voltage at terminal. If voltage is high >12V, check wire #4086 to Platform Bosch ECU pin 89/96. 2. Check condition of pins in Platform Bosch ECU. Check for Bent pins, debris or stray wires causing a short. 3. Check for water ingress in the Platform Bosch ECU Connectors. 4. Check LED for damage or any loose wiring in the control panel. 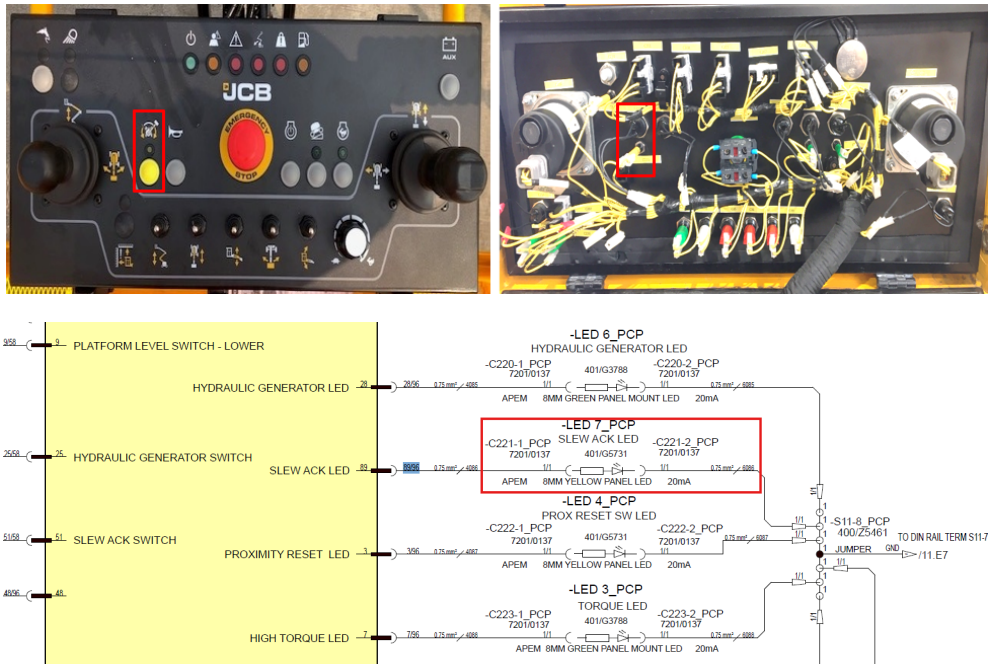

5.1.176 B1202-16

Error code:	B1202-16
ECU	Platform ECU
Description:	High torque LED output short circuit to low
Component:	High torque LED
Vehicle reaction:	Detect failure mode
Possible Cause:	1. A short circuit within the wiring harness 2. A short circuit within the harness connectors 3. Water damage/ingress within the harness connectors 4. Damaged component

© 2025 Enter your company name

Service Action:	1. Check voltage at LED Light connector -C223-1_PCP pin 1/2 greater than 10.5 volt. 2. Check continuity of GND path from LED light connector -223-2_PCP pin 2/2 to Turntable GND & Check Ground wire 6088. 3. Check bent / backed out pins, debris, shorts or water ingress. 4. Check Platform ECU terminal 7/96. Check Connector for bent / backed out pins, debris, shorts or water ingress. 5. Check wire #4088 for continuity from Platform ECU pin 7/96 to LED light connector -C223-1_PCP pin 1/2. 6. Check the harness for any abrasions, pinching or any other damage that may lead to a fault. 7 .If there is continuity and we are getting 10V supply then it may be internal damage to LED light. 8. If issue still there replace the LED light. 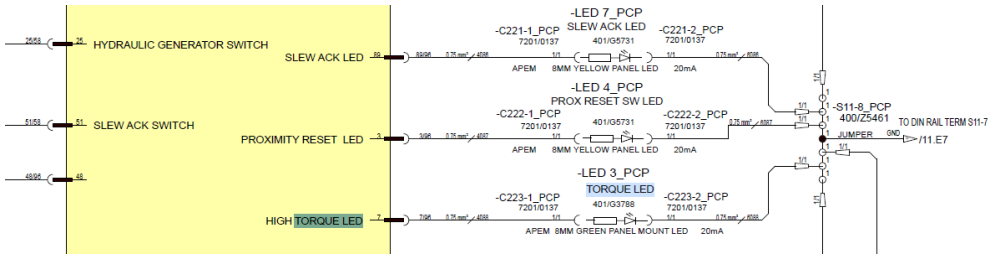

5.1.177 B1203-13

Error code:	**B1203-13**
ECU	Platform ECU
Description:	High torque LED output open circuit
Component:	High torque LED
Vehicle reaction:	Detect failure mode
Possible Cause:	1. A short circuit within the wiring harness 2. A short circuit within the harness connectors 3. Water damage/ingress within the harness connectors 4. Damaged component
Service Action:	1. Check voltage at LED Light connector -C223-1_PCP pin 1/2 greater than 10.5 volt.

© 2025 Enter your company name

	2. Check continuity of GND path from LED light connector -223-2_PCP pin 2/2 to Turntable GND & Check Ground wire 6088. 3. Check bent / backed out pins, debris, shorts or water ingress. 4. Check Platform ECU terminal 7/96. Check Connector for bent / backed out pins, debris, shorts or water ingress. 5. Check wire #4088 for continuity from Platform ECU pin 7/96 to LED light connector -C223-1_PCP pin 1/2. 6. Check the harness for any abrasions, pinching or any other damage that may lead to a fault. 7 .If there is continuity and we are getting 10V supply then it may be internal damage to LED light. 8. If issue still there replace the LED light. 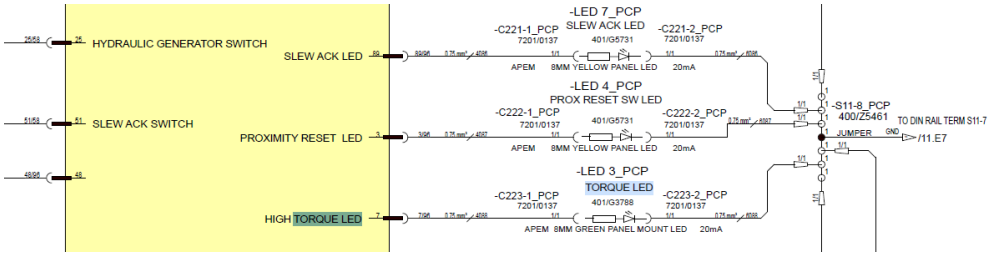

5.1.178 B1204-16

Error code:	B1204-16
ECU	Platform ECU
Description:	High Engine Speed LED output short circuit to low
Component:	High Engine Speed LED
Vehicle reaction:	Detect failure mode
Possible Cause:	1. A short circuit within the wiring harness 2. A short circuit within the harness connectors 3. Water damage/ingress within the harness connectors 4. Damaged component
Service Action:	1. Check voltage at LED Light connector -C224-1_PCP pin 1/2 greater than 10.5 volt. 2. Check continuity of GND path from LED light connector C-224-2_PCP pin 2/2 to Turntable GND & Check Ground wire 6089.

© 2025 Enter your company name

	3. Check bent / backed out pins, debris, shorts or water ingress. 4. Check Platform ECU terminal 43/58. Check Connector for bent / backed out pins, debris, shorts or water ingress. 5. Check wire #4089 for continuity from Platform ECU pin 43/58 to LED light connector -C224-1_PCP pin 1/2. 6. Check the harness for any abrasions, pinching or any other damage that may lead to a fault. 7 .If there is continuity and we are getting 10V supply then it may be internal damage to LED light. 8. If issue still there replace the LED light. 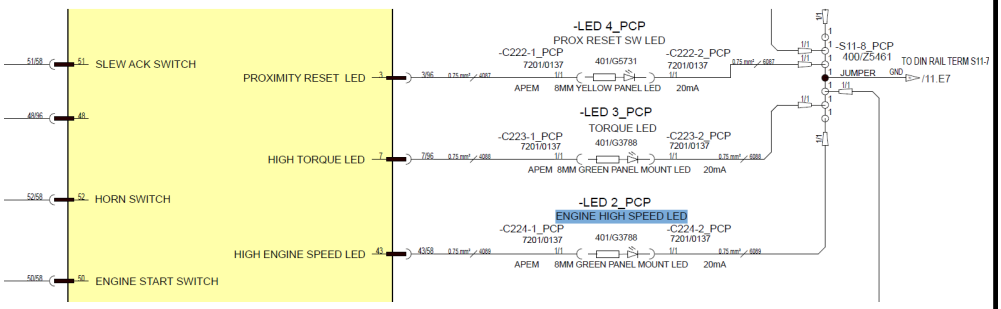

5.1.179 B1205-13

Error code:	B1205-13
ECU	Platform ECU
Description:	High Engine Speed LED output open circuit
Component:	High Engine Speed LED
Vehicle reaction:	Detect failure mode
Possible Cause:	1. A short circuit within the wiring harness 2. A short circuit within the harness connectors 3. Water damage/ingress within the harness connectors 4. Damaged component
Service Action:	1. Check voltage at LED Light connector -C224-1_PCP pin 1/2 greater than 10.5 volt. 2. Check continuity of GND path from LED light connector C-224-2_PCP pin 2/2 to Turntable GND & Check Ground wire 6089.

© 2025 Enter your company name

	3. Check bent / backed out pins, debris, shorts or water ingress. 4. Check Platform ECU terminal 43/58. Check Connector for bent / backed out pins, debris, shorts or water ingress. 5. Check wire #4089 for continuity from Platform ECU pin 43/58 to LED light connector -C224-1_PCP pin 1/2. 6. Check the harness for any abrasions, pinching or any other damage that may lead to a fault. 7 .If there is continuity and we are getting 10V supply then it may be internal damage to LED light. 8. If issue still there replace the LED light. 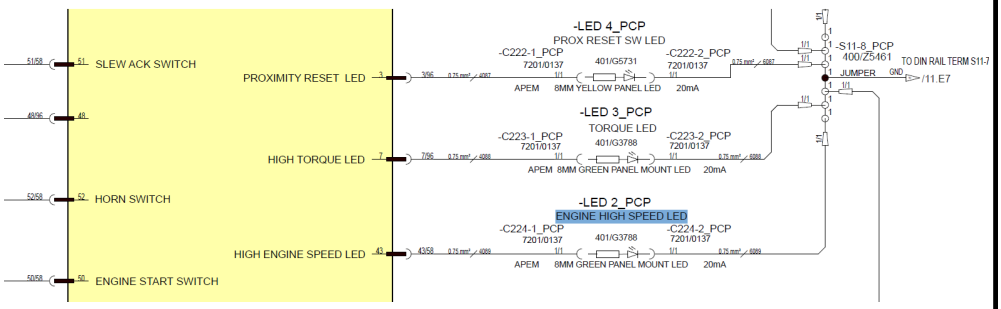

5.1.180 B1206-17

Error code:	B1206-17
ECU	Base ECU
Description:	Horn - Base Horn Button Short Circuit to High.
Component:	Horn Button
Vehicle reaction:	Detect failure mode; Ignore input
Possible Cause:	1. A short circuit within the wiring harness 2. A short circuit within the harness connectors 3. Water damage/ingress within the harness connectors 4. Damaged component
Service Action:	1. Check wiring between 'C26-XC2_TH Pin 52/58 on the Bosch Base ECU Connector' and 'C101-1_TH on the Base Horn Button'. 2. Disconnect 'C26-XC2_TH Bosch Base ECU Connector' and check terminal 52/58 ensuring that nothing is touching it. Same with 'C101-1_TH on the

© 2025 Enter your company name

	Base Horn Button'. 3. Check connectors are dry and free of debris. Check for damaged terminals on the 'C26-XC2_TH Bosch Base ECU Connector'. 4. Check operation of the Base Horn Button. Check for physical damage to the Horn Button, connectors and other harness components.  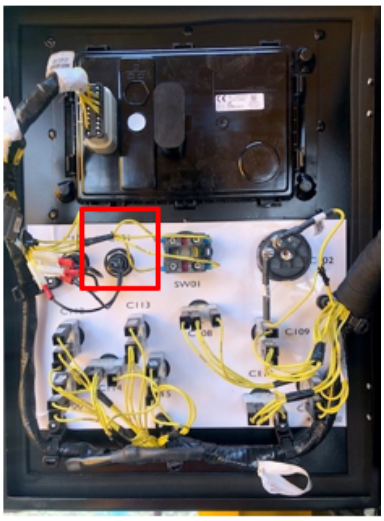 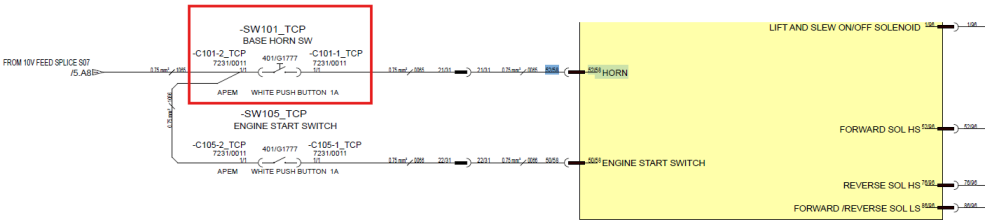

5.1.181 B1207-16

Error code:	B1207-16
ECU	Base ECU
Description:	Horn - Base Horn Button Short Circuit to Low.
Component:	Horn Button
Vehicle reaction:	Detect failure mode; Ignore input
Possible Cause:	1. A short circuit within the wiring harness 2. A short circuit to the chassis

© 2025 Enter your company name

	3. A short circuit within the harness connectors 4. Water damage/ingress within the harness connectors 5. Damaged component
Service Action:	1. Check wiring between 'C26-XC2_TH Pin 52/58 on the Bosch Base ECU Connector' and 'C101-1_TCP on the Base Horn Button'. 2. Check the wiring has not shorted to the chassis of the machine (caused perhaps by pinching or abrasion). 3. Disconnect 'C26-XC2_TH Bosch Base ECU Connector' and check terminal 52/58 ensuring that nothing is touching it. Same with 'C101-1_TCP on the Base Horn Button'. 4. Check connectors are dry and free of debris. Check for damaged terminals on the 'C26-XC2_TH Bosch Base ECU Connector'. 5. Check operation of the Base Horn Button. Check for physical damage to the Horn Button, connectors and other harness components.  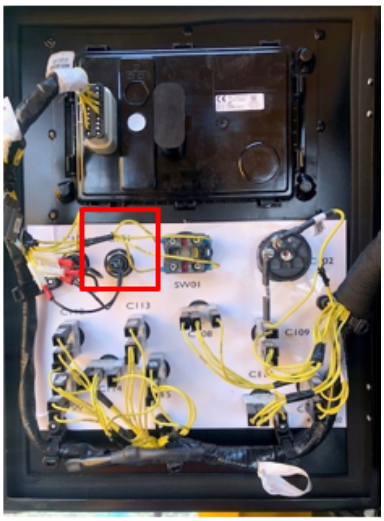 

5.1.182 B1208-24

Error code:	**B1208-24**
ECU	Base ECU
Description:	Horn - Base Horn Button Stuck >10s.

© 2025 Enter your company name

Component :	Horn Button
Vehicle reaction:	Detect failure mode; Ignore input
Possible Cause:	1. A short circuit within the wiring harness 2. A short circuit within the harness connectors 3. Water damage/ingress within the harness connectors 4. Damaged component
Service Action:	1. Check wiring between 'C26-XC2_TH Pin 52/58 on the Bosch Base ECU Connector' and 'C101-1_TCP on the Base Horn Button'. 2. Disconnect 'C26-XC2_TH Bosch Base ECU Connector' and check terminal 52/58 ensuring that nothing is touching it. Same with 'C101-1_TCP on the Base Horn Button'. 3. Check connectors are dry and free of debris. Check for damaged terminals on the 'C26-XC2_TH Bosch Base ECU Connector'. 4. Check operation of the Base Horn Button. Check for physical damage to the Horn Button, connectors and other harness components. 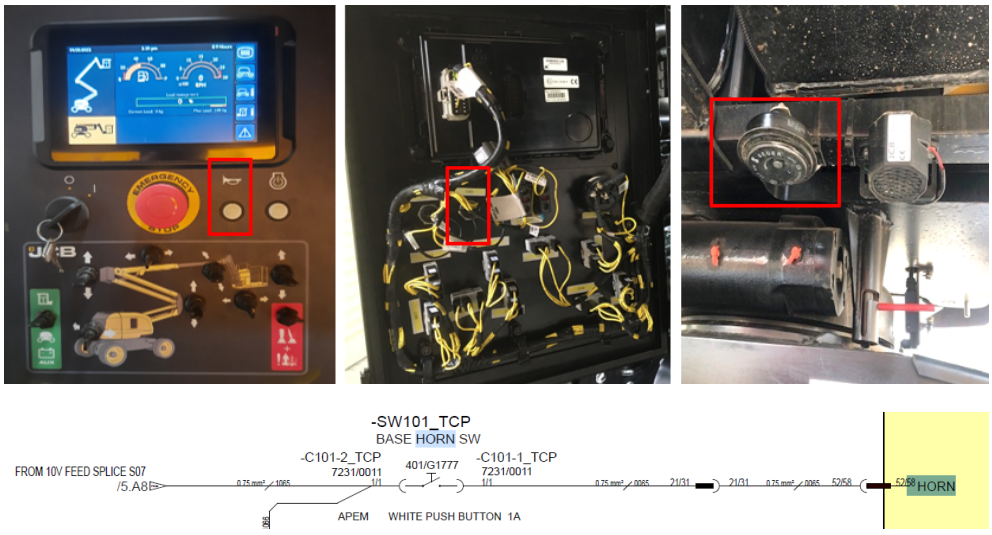

5.1.183 **B1209-17**

Error code:	**B1209-17**
ECU	Platform ECU
Description :	Engine Speed - Engine Speed Button Short Circuit to High.

© 2025 Enter your company name

Component :	High Engine Speed Button
Vehicle reaction:	Detect failure mode; Ignore input
Possible Cause:	1. A short circuit within the wiring harness 2. A short circuit within the harness connectors 3. Water damage/ingress within the harness connectors 4. Damaged component
Service Action:	1. Disconnect connector -C211-2_PCP from the rear of the Engine Speed Button on the Platform Control Panel. Measure voltage at terminal. If voltage is high >12V, check wire #0088 to Platform Bosch ECU pin 48/58. 2. Check condition of pins in Platform Bosch ECU. Check for Bent pins, debris or stray wires causing a short. 3. Check for water ingress in the Platform Bosch ECU Connectors. 4. Check Switch for damage or any loose wiring in the control panel.  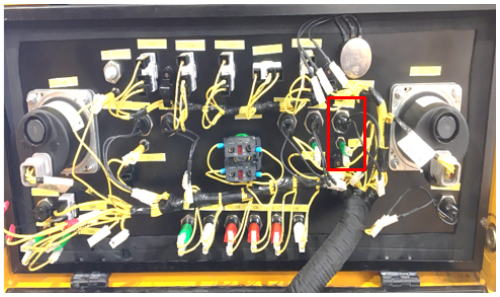 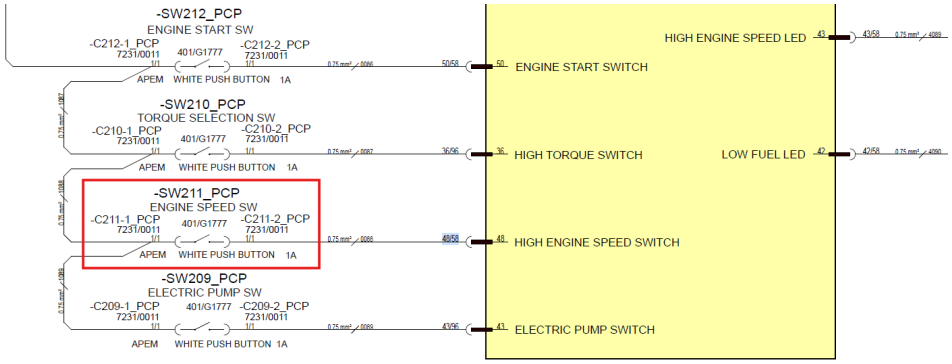

5.1.184 B1210-16

Error code:	**B1210-16**
ECU	Platform ECU
Description :	Engine Speed - Engine Speed Button Short Circuit to Low.

© 2025 Enter your company name

Component :	High Engine Speed Button
Vehicle reaction:	Detect failure mode; Ignore input
Possible Cause:	1. A short circuit within the wiring harness 2. A short circuit to the chassis 3. A short circuit within the harness connectors 4. Water damage/ingress within the harness connectors 5. Damaged component
Service Action:	1. Disconnect connector -C211-2_PCP from the rear of the Engine Speed Switch on the Platform Control Panel. Measure resistance from Terminal to GND. If a short exists, check wire #0088 to Platform Bosch ECU pin 48/58. 2. Check Wire #0088 is not shorted to GND / Chassis. Check for abrasions and pinching. 3. Check condition of pins in Platform Bosch ECU. Check for Bent pins, debris or stray wires causing a short. 4. Check for water ingress in the Platform Bosch ECU Connectors. 5. Check Switch for damage or shorting to connector -C211-2_PCP.



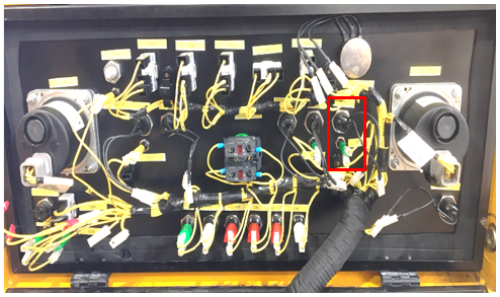

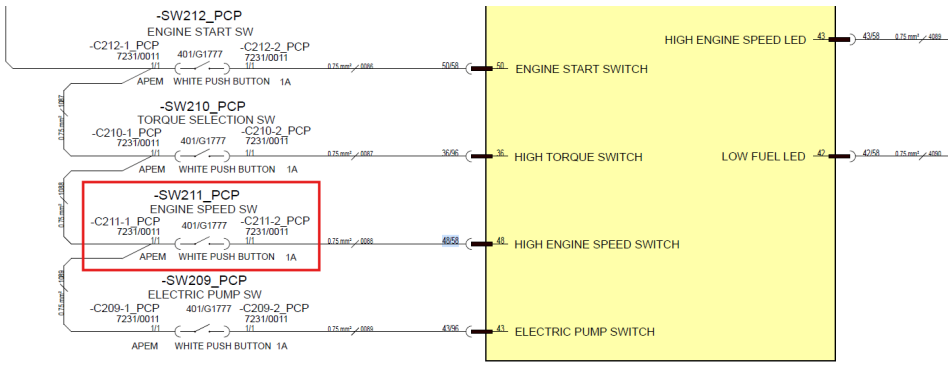

5.1.185 B1211-24

Error code:	**B1211-24**

© 2025 Enter your company name

ECU	Platform ECU
Description:	Engine Speed - Engine Speed Button Stuck >10s.
Component:	High Engine Speed Button
Vehicle reaction:	Detect failure mode; Ignore input
Possible Cause:	1. A short circuit within the wiring harness 2. A short circuit within the harness connectors 3. Water damage/ingress within the harness connectors 4. Damaged component
Service Action:	1. Disconnect connector -C211-2_PCP from the rear of the Engine Speed Switch on the Platform Control Panel. Measure voltage at terminal. If voltage is high >12V, check wire #0084 to Platform Bosch ECU pin 48/58. 2. Check condition of pins in Platform Bosch ECU. Check for Bent pins, debris or stray wires causing a short. 3. Check for water ingress in the Platform Bosch ECU Connectors. 4. Check operation of the system. Check for physical damage to the Engine Speed Switch, connectors and other harness components.



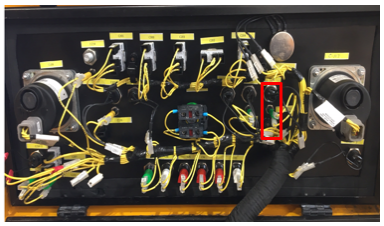

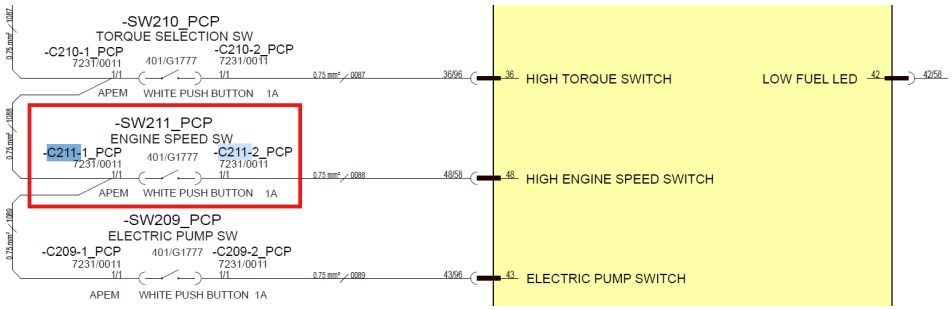

5.1.186 B1212-17

Error code:	**B1212-17**
ECU	Platform ECU

© 2025 Enter your company name

Description:	High Torque - High Torque Button Short Circuit to High.
Component:	High Torque Button
Vehicle reaction:	Detect failure mode; Ignore input
Possible Cause:	1. A short circuit within the wiring harness 2. A short circuit within the harness connectors 3. Water damage/ingress within the harness connectors 4. Damaged component
Service Action:	1. Disconnect connector -C210-2_PCP from the rear of the High Torque Button on the Platform Control Panel. Measure voltage at terminal. If voltage is high >12V, check wire #0087 to Platform Bosch ECU pin 36/96. 2. Check condition of pins in Platform Bosch ECU. Check for Bent pins, debris or stray wires causing a short. 3. Check for water ingress in the Platform Bosch ECU Connectors. 4. Check button for damage or any loose wiring in the control panel. 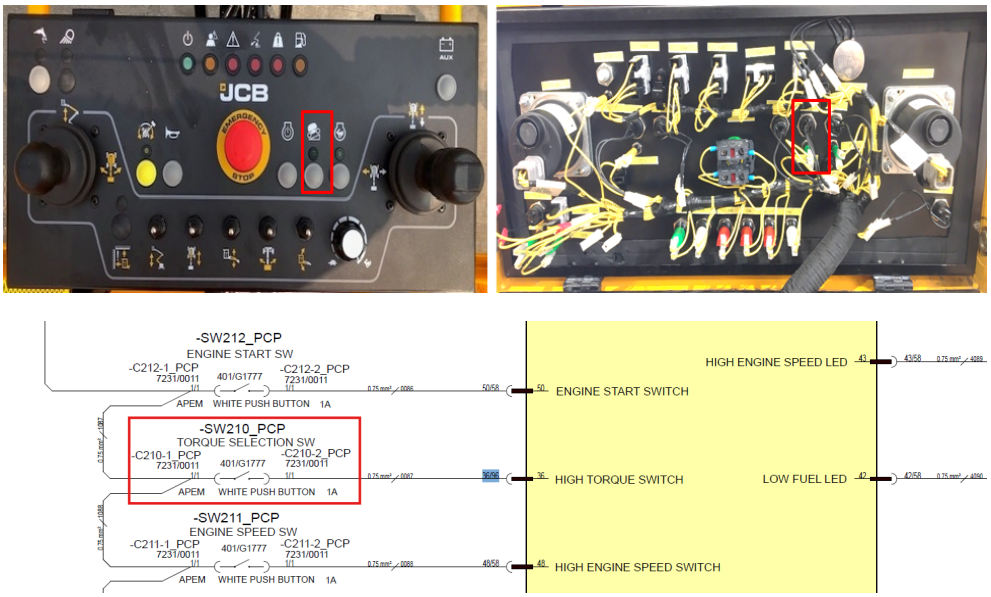

5.1.187 B1213-16

Error code:	**B1213-16**
ECU	Platform ECU

© 2025 Enter your company name

Description:	High Torque - High Torque Button Short Circuit to Low.
Component:	High Torque Button
Vehicle reaction:	Detect failure mode; Ignore input
Possible Cause:	1. A short circuit within the wiring harness 2. A short circuit to the chassis 3. A short circuit within the harness connectors 4. Water damage/ingress within the harness connectors 5. Damaged component
Service Action:	1. Disconnect connector -C210-2_PCP from the rear of the High Torque Button on the Platform Control Panel. Measure resistance from Terminal to GND. If a short exists, check wire #0087 to Platform Bosch ECU pin 36/96. 2. Check Wire #0087 is not shorted to GND / Chassis. Check for abrasions and pinching. 3. Check condition of pins in Platform Bosch ECU. Check for Bent pins, debris or stray wires causing a short. 4. Check for water ingress in the Platform Bosch ECU Connectors. 5. Check Switch for damage or shorting to connector -C210-2_PCP. 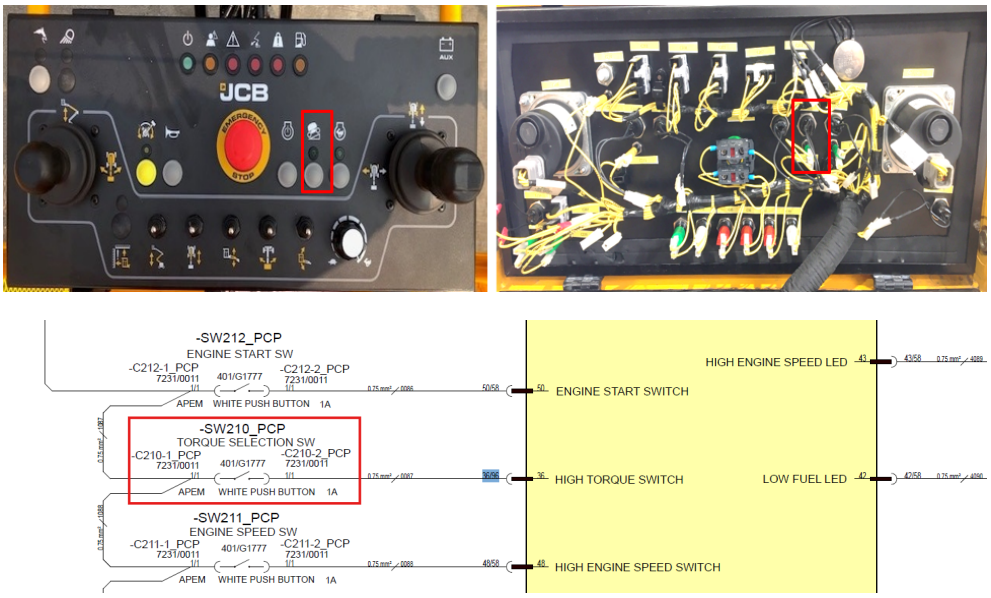

5.1.188 B1214-24

Error code:	**B1214-24**
ECU	Platform ECU

© 2025 Enter your company name

Description:	High Torque - High Torque Button Stuck >10s.
Component:	High Torque Button
Vehicle reaction:	Detect failure mode; Ignore input
Possible Cause:	1. A short circuit within the wiring harness 2. A short circuit within the harness connectors 3. Water damage/ingress within the harness connectors 4. Damaged component
Service Action:	1. Disconnect connector -C210-2_PCP from the rear of the High Torque Button on the Platform Control Panel. Measure voltage at terminal. If voltage is high >12V, check wire #0090 to Platform Bosch ECU pin 36/96. 2. Check condition of pins in Platform Bosch ECU. Check for Bent pins, debris or stray wires causing a short. 3. Check for water ingress in the Platform Bosch ECU Connectors. 4. Check operation of the system. Check for physical damage to the High Torque Button, connectors and other harness components. 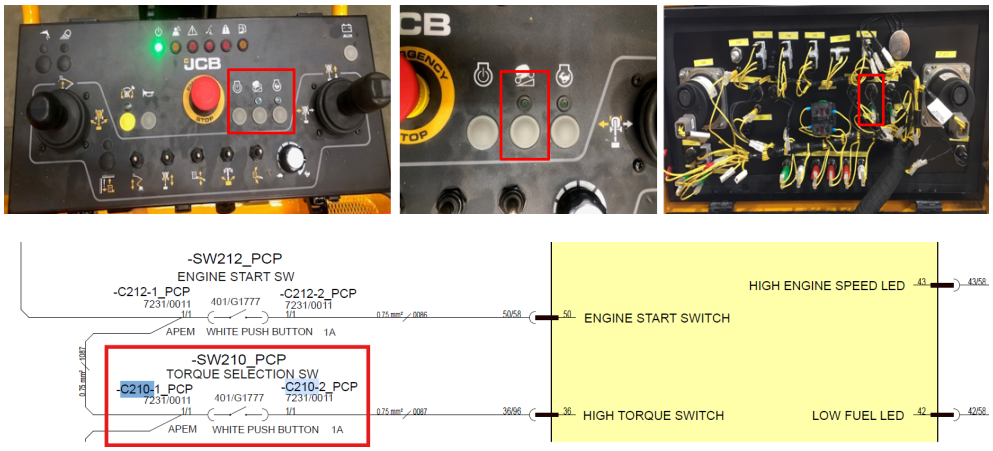

5.1.189 **B1215-17**

Error code:	**B1215-17**
ECU	Platform ECU
Description:	Hydraulic Generator - Hydraulic Generator Button Short Circuit to High.
Component:	Power to Platform Button

© 2025 Enter your company name

Vehicle reaction:	Detect failure mode; Ignore input
Possible Cause:	1. A short circuit within the wiring harness 2. A short circuit within the harness connectors 3. Water damage/ingress within the harness connectors 4. Damaged component
Service Action:	1. Disconnect connector -C207-2_PCP from the rear of the Hydraulic Generator Button on the Platform Control Panel. Measure voltage at terminal. If voltage is high >12V, check wire #0082 to Platform Bosch ECU pin 25/58. 2. Check condition of pins in Platform Bosch ECU. Check for Bent pins, debris or stray wires causing a short. 3. Check for water ingress in the Platform Bosch ECU Connectors. 4. Check Switch for damage or any loose wiring in the control panel.   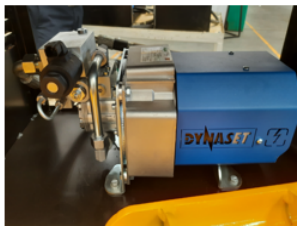 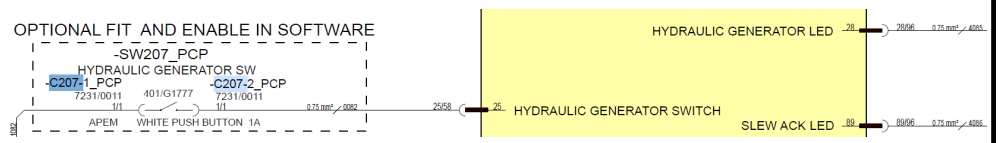

5.1.190 B1216-16

Error code:	**B1216-16**
ECU	Platform ECU
Description:	Hydraulic Generator - Hydraulic Generator Button Short Circuit to Low.
Component:	Power to Platform Button
Vehicle reaction:	Detect failure mode; Ignore input
Possible Cause:	1. A short circuit within the wiring harness 2. A short circuit to the chassis 3. A short circuit within the harness connectors

© 2025 Enter your company name

	4. Water damage/ingress within the harness connectors 5. Damaged component
Service Action:	1. Disconnect connector -C207-2_PCP from the rear of the Hydraulic Generator Button on the Platform Control Panel. Measure resistance from Terminal to GND. If a short exists, check wire #0082 to Platform Bosch ECU pin 25/58. 2. Check Wire #0082 is not shorted to GND / Chassis. Check for abrasions and pinching. 3. Check condition of pins in Platform Bosch ECU. Check for Bent pins, debris or stray wires causing a short. 4. Check for water ingress in the Platform Bosch ECU Connectors. 5. Check Switch for damage or shorting to connector -C207-2_PCP. 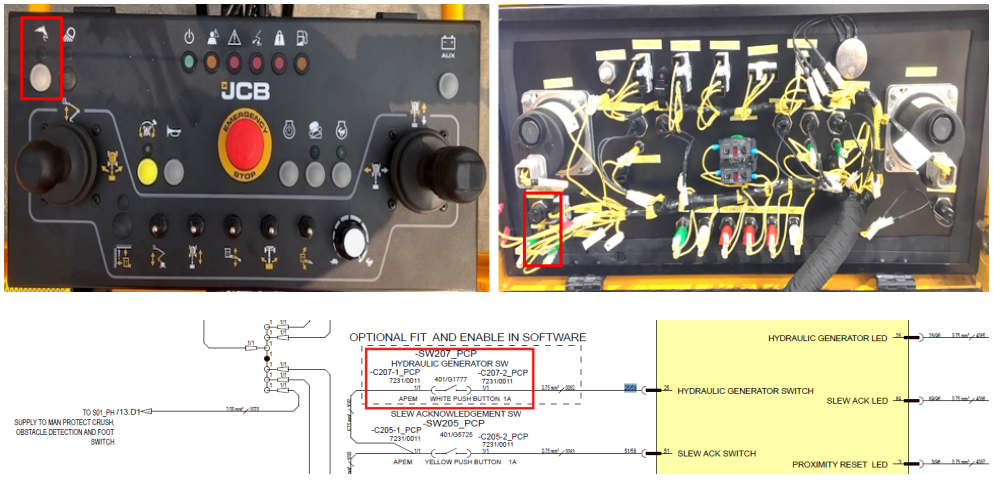

5.1.191 **B1217-24**

Error code:	**B1217-24**
ECU	Platform ECU
Description:	Hydraulic Generator - Hydraulic Generator Button Stuck >10s.
Component:	Power to Platform Button
Vehicle reaction:	Detect failure mode; Ignore input
Possible Cause:	1. A short circuit within the wiring harness 2. A short circuit within the harness connectors 3. Water damage/ingress within the harness connectors 4. Damaged component

© 2025 Enter your company name

Service Action:	1. Disconnect connector -C207-2_PCP from the rear of the Hydraulic Generator Button on the Platform Control Panel. Measure voltage at terminal. If voltage is high >12V, check wire #0082 to Platform Bosch ECU pin 25/58. 2. Check condition of pins in Platform Bosch ECU. Check for Bent pins, debris or stray wires causing a short. 3. Check for water ingress in the Platform Bosch ECU Connectors. 4. Check operation of the system. Check for physical damage to the Hydraulic Generator Button, connectors and other harness components.

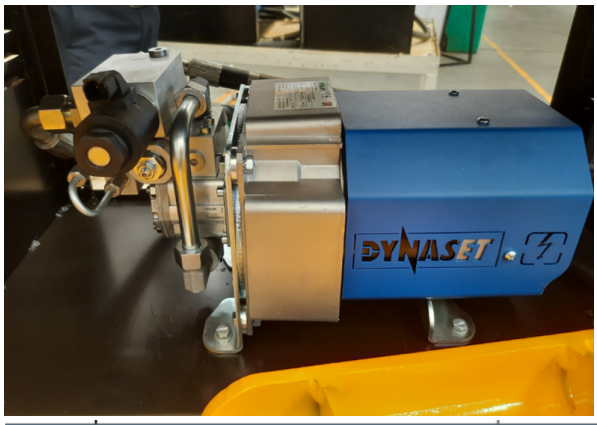

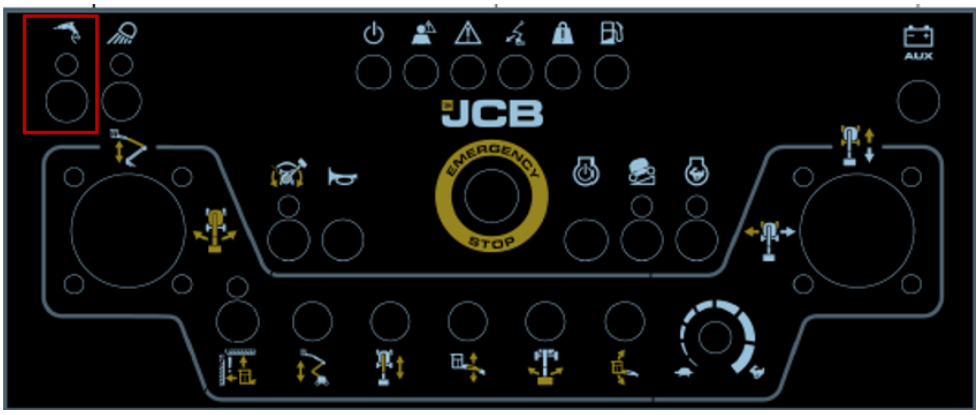

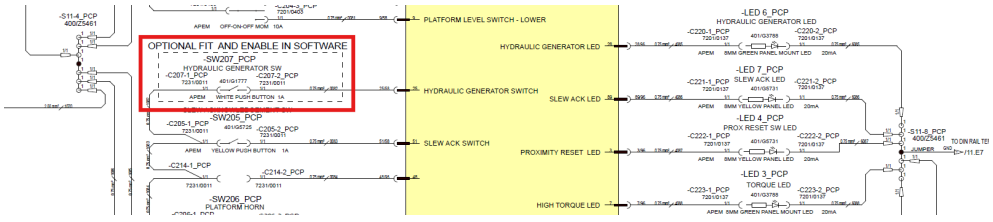

5.1.192 B1221-17

Error code:	**B1221-17**
ECU	Base ECU

© 2025 Enter your company name

Description:	Overload - Overload Sensor 1 Out of Range (High).
Component:	Overload Sensor 1
Vehicle reaction:	Detect failure mode; Implement Overload alarm and switch on Fault LED
Possible Cause:	1. Load sensor is not calibrated 2. Load sensor is faulty 3. Short Circuit to High 4. Water ingress
Service Action:	1. Perform weight sensor calibration from display screen. 2. Check condition of weight sensor and connectors, replace if faulty 3. Check condition of wiring from Weight Sensor. Check Interconnects -C05_PH and -C05_PH. Check connections to DIN Rail terminal -S11-6 (Wires #6070 and #6072). Check inputs to Platform Bosch ECU on pins 69/96 through to 70/96. Check platform connector -C22_PH terminals W/21 and X/21. Check for bent or backed out terminals or debris within connectors. Check wiring for any breaks, abrasions or pinching. Observe for any obvious fault or damamge on wiring harness. Perform continuity checks if neccesary and check resistance to +12V and +10V on -C22_PH terminals W/21 and X/21, checking for shorts to High. 4. Check all connectors for water ingress. 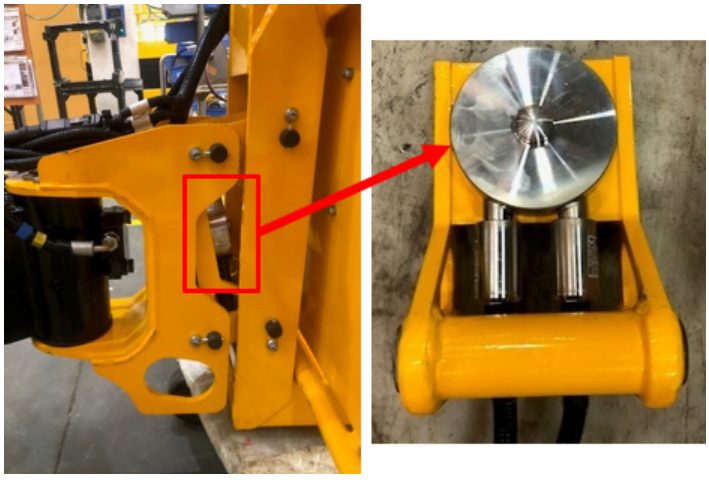

© 2025 Enter your company name



5.1.193 B1222-16

Error code:	B1222-16
ECU	Base ECU
Description:	Overload - Overload Sensor 1 Out of Range (Low) or Open Circuit.
Component:	Overload Sensor 1
Vehicle reaction:	Detect failure mode; Implement Overload alarm and switch on Fault LED NOTE:- The Fault code in case of Open Circuit is detected only when fault is detected on both pins(68,69)of load sensor 1
Possible Cause:	1. Load sensor is not calibrated 2. Connectors not fully inserted. 3. Load sensor is faulty 4. Short Circuit to Low 5. Water ingress
Service Action:	1. Perform weight sensor calibration from display screen. 2. Check condition of weight sensor and connectors -C05_PH and -C06_PH, Ensure connectors are fully inserted. Check platform connector -C22_PH. Check for backed out terminals. 3. Replace weight sensor if faulty 4. Check wiring for any breaks, abrasions or pinching. Observe for any obvious fault or damamge on wiring harness. Perform continuity checks if neccesary and check resistance to GND on -C22_PH terminals W/21 and X/21, checking for shorts to Low. 5. Check all connectors for water ingress.

© 2025 Enter your company name







5.1.194 B1223-17

Error code:	B1223-17
ECU	Base ECU
Description:	Overload - Overload Sensor 2 Out of Range (High).
Component:	Overload Sensor 2
Vehicle reaction:	Detect failure mode; Implement Overload alarm and switch on Fault LED
Possible Cause:	1. Load sensor is not calibrated 2. Load sensor is faulty 3. Short Circuit to High 4. Water ingress
Service Action:	1. Perform weight sensor calibration from display screen. 2. Check condition of weight sensor and connectors, replace if faulty 3. Check condition of wiring from Weight Sensor. Check Interconnects -C06_PH and -C06_PH. Check connections to DIN Rail terminal -S11-6 (Wires #6070 and #6072). Check inputs to Platform Bosch ECU on pins 69/96 through to 70/96. Check platform connector -C22_PH terminals W/21

© 2025 Enter your company name

	and X/21. Check for bent or backed out terminals or debris within connectors. Check wiring for any breaks, abrasions or pinching. Observe for any obvious fault or damamge on wiring harness. Perform continuity checks if neccesary and check resistance to +12V and +10V on -C22_PH terminals W/21 and X/21, checking for shorts to High. 4. Check all connectors for water ingress.   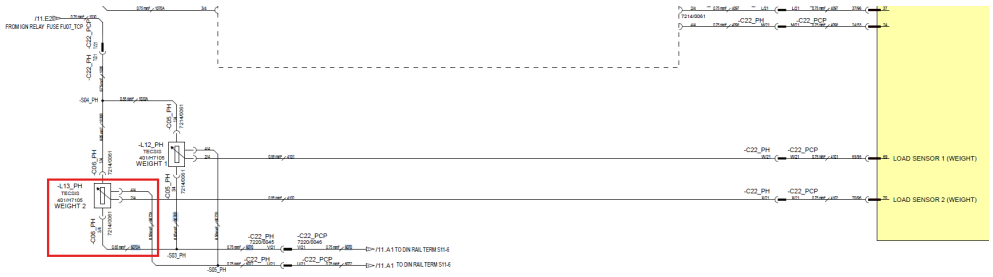

5.1.195 B1224-16

Error code:	B1224-16
ECU	Base ECU
Description:	Overload - Overload Sensor 2 Out of Range (Low) or Open Circuit.
Component:	Overload Sensor 2
Vehicle reaction:	Detect failure mode; Implement Overload alarm and switch on Fault LED NOTE:- The Fault code in case of Open Circuit is detected only when fault is detected on both pins(70,71)of load sensor 2.

© 2025 Enter your company name

Possible Cause:	1. Load sensor is not calibrated 2. Connectors not fully inserted. 3. Load sensor is faulty 4. Short Circuit to Low 5. Water ingress
Service Action:	1. Perform weight sensor calibration from display screen. 2. Check condition of weight sensor and connectors -C05_PH and -C06_PH, Ensure connectors are fully inserted. Check platform connector -C22_PH. Check for backed out terminals. 3. Replace weight sensor if faulty 4. Check wiring for any breaks, abrasions or pinching. Observe for any obvious fault or damamge on wiring harness. Perform continuity checks if neccesary and check resistance to GND on -C22_PH terminals W/21 and X/21, checking for shorts to Low. 5. Check all connectors for water ingress.   

5.1.196 **B1225-2F**

Error code:	**B1225-2F**
ECU	Base ECU

© 2025 Enter your company name

Description:	Overload - Overload Sensor Data Erratic (Difference >20%).
Component:	Overload Sensor(s)
Vehicle reaction:	Detect failure mode; Implement Overload alarm and switch on Fault LED
Possible Cause:	1. Load sensor is not calibrated 2. Load sensor is not secured correctly 3. Wiring fault to load sensor 4. Water ingress
Service Action:	1. Perform weight sensor calibration from display screen. 2. Check mounting of Sensor, check for damage to both sensor and platform basket. Check no debris. 3. Check condition of wiring to sensor. Check wiring for any breaks, abrasions or pinching. Observe for any obvious fault or damage on wiring harness. check inputs to Platform Bosch ECU - Check terminals 68/96 through to 71/96. Note Load sensor 2 signals are in opposite to Load sensor 1. Check condition of platform connector -C22_PH, checking terminals T/21, V/21, W/21 and X/21. Check weight sensor connectors -C04_PH and -C05_PH for damage. Ensure all connectors fully inserted. Check DIN rail terminal -S11-6. Check wiring inserted correctly. Check FU07_TCP. 4. Check all connectors for water ingress. 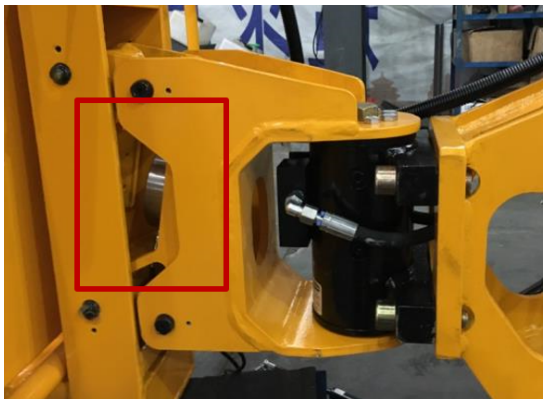 

© 2025 Enter your company name

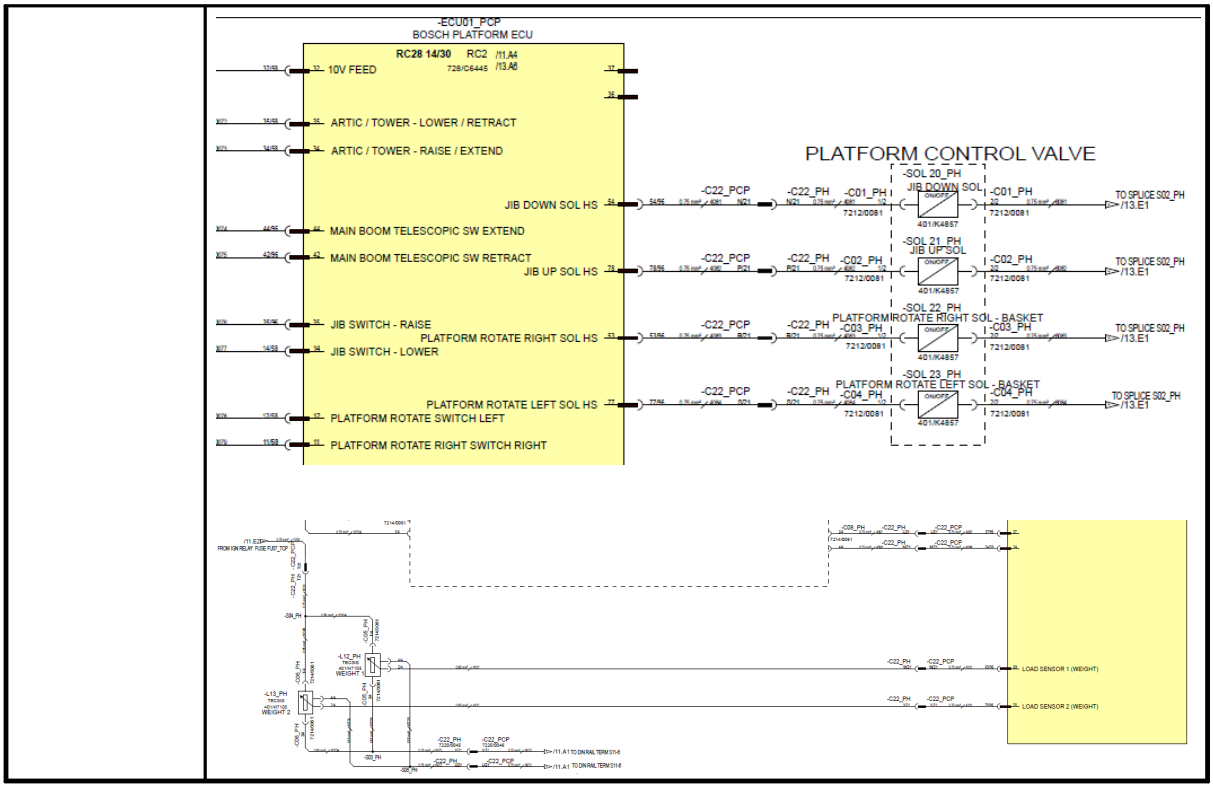

.

5.1.197 B1227-17

Error code:	B1227-17
ECU	Base ECU
Description:	Oscillating Axle - Axle Lock Pressure Sensor Short Circuit to High.
Component:	Oscillating Axle Pressure Sensor
Vehicle reaction:	Detect failure mode; Prevent all Raise, Extend and Slew; In Raised or Slew position - prevent drive & steer; In Stowed and Forward position - allow drive
Possible Cause:	1. A short circuit within the wiring harness 2. A short circuit within the harness connectors 3. Water damage/ingress within the harness connectors 4. Damaged component
Service Action:	1. Output voltage of pressure sensor is 0.5 - 4.5VDC. Disconnect interconnect connectors -C214_TH and -C214_TH. Measure voltage at pin 4/4 (Wire #4012) on both connectors. If one of the measurements is above

© 2025 Enter your company name

	4.5VDC then there is a short to high on that connection. Trace the fault back to where there is a short circuit to high. 2. Check interconnects -C214_TH and -C214_TH for any damage, shorts, debris or stray wire. Check the Base Bosch ECU connector (58-way) for any damage, bent pins debris etc. Check pin 27/58. 3. Check all above connectors for any water ingress. 4. Check the pressure sensor for damage or malfunction. Replace component.  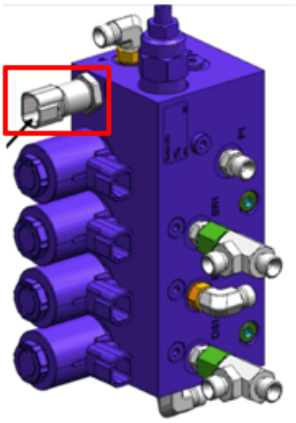 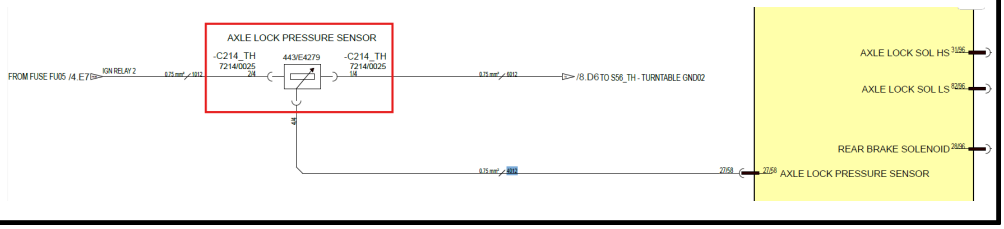

5.1.198 B1228-16

Error code:	B1228-16
ECU	Base ECU
Description:	Oscillating Axle - Axle Lock Pressure Sensor Short Circuit to Low or Open Circuit.
Component:	Oscillating Axle Pressure Sensor
Vehicle reaction:	Detect failure mode; Prevent all Raise, Extend and Slew; In Raised or Slew position - prevent drive & steer;

© 2025 Enter your company name

	In Stowed and Forward position - allow drive
Possible Cause:	1. A short circuit within the wiring harness 2. A short circuit within the harness connectors 3. Water damage/ingress within the harness connectors 4. Damaged component
Service Action:	1. Output voltage of pressure sensor is 0.5 - 4.5VDC. Disconnect interconnect connectors -C214_TH and -C214_TH. Measure voltage at pin 4/4 (Wire #4012) on both connectors. If one of the measurements is below 0.5VDC then there is a short to low on that connection. Trace the fault back to where there is a short circuit to Low. Check for abrasions or pinching on the wire harness. 2. Check interconnects -C214_TH and -C214_TH for any damage, shorts, debris or stray wire. Check the Base Bosch ECU connector (58-way) for any damage, bent pins debris etc. Check pin 27/58. 3. Check all above connectors for any water ingress. 4. Check the pressure sensor for damage or malfunction. Replace component. 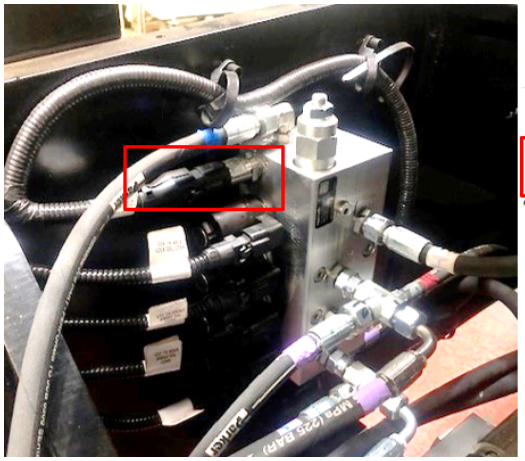 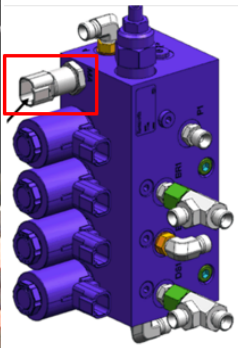 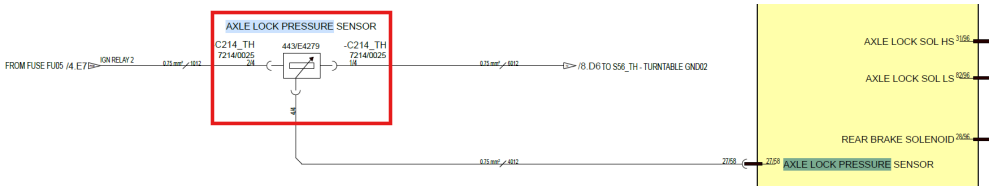

5.1.199 B1232-17

Error code:	**B1232-17**
ECU	Base ECU

© 2025 Enter your company name

Description :	Fuel Sender - Fuel Sender out of Range (High).
Component :	Fuel Sender
Vehicle reaction:	Detect failure mode; Resistance reads more than 183 ohms
Possible Cause:	1. Open Circuit 2. Faulty Component
Service Action:	1. Resistance reads above 183 Ohms to GND. Check for open Circuit between Fuel Level Sensor connector -C28_TH Pin 1/2 and Base Bosch ECU pin 21/96. 2. Check resistance across Fuel Level Sender, replace if value reads above 183 Ohms. 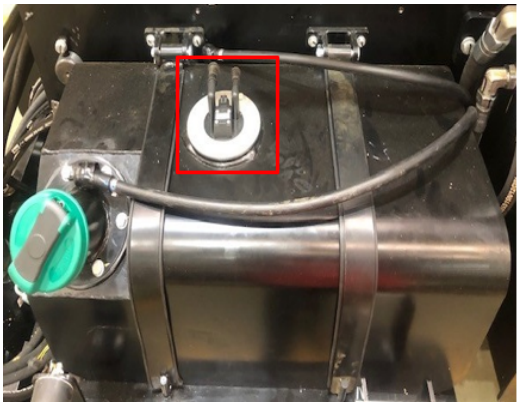 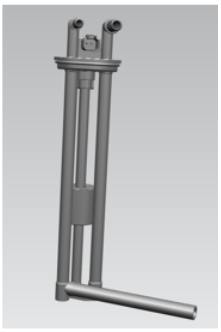 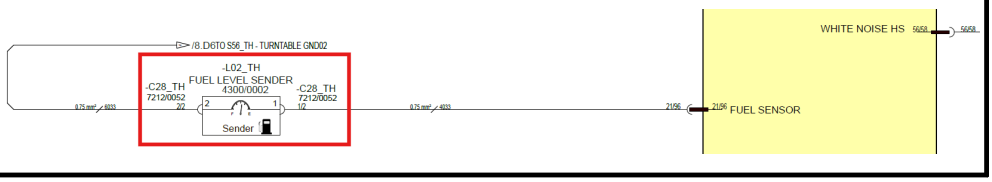

5.1.200 B1233-16

Error code:	**B1233-16**
ECU	Base ECU
Description :	Fuel Sender - Fuel Sender out of Range (Low).
Component :	Fuel Sender

© 2025 Enter your company name

Vehicle reaction:	Detect failure mode; Resistance reads less than 5 ohms
Possible Cause:	1. Short Circuit 2. Faulty Component
Service Action:	1. Resistance reads below 5 Ohms to GND. Check for Short Circuit between Fuel Level Sensor connector -C28_TH Pin 1/2 (Wire #4033) and GND. 2. Check resistance across Fuel Level Sender, replace if value reads below 0 Ohms. 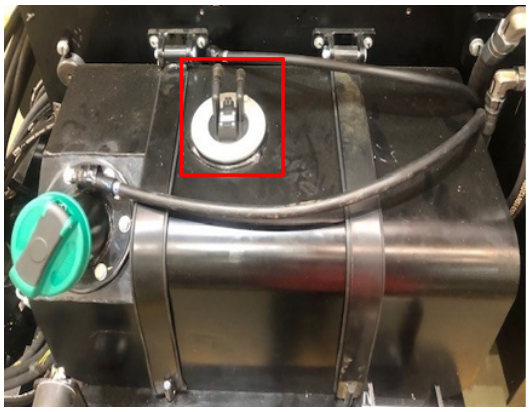 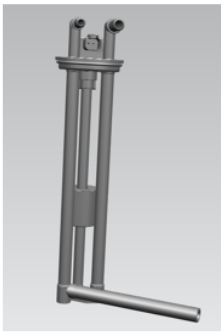 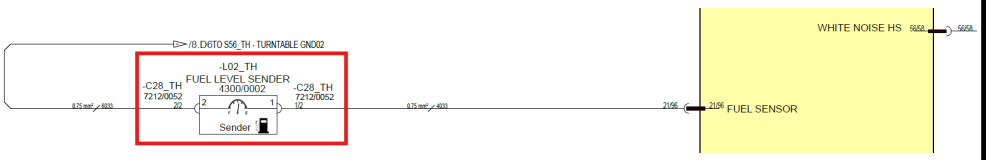

5.1.201 **B1235-17**

Error code:	**B1235-17**
ECU	Platform ECU
Description:	E-Stop & Base Override - E-Stop & Base Override - E-Stop Plausibility Check
Component:	E-Stop(s)
Vehicle reaction:	1. Disable all outputs except CAN (Emergency stop pressed) 2. Default to E-Stop pressed condition
Possible Cause:	1. A short circuit within the wiring harness 2. A poor connection or damaged terminal within the connector(s)

© 2025 Enter your company name

	3. A damaged or broken wire within the wiring harness 4. Component is damaged
Service Action:	1. Check no short in wiring harness between E-STOP SWITCH +VE to GND or E-STOP -VE to GND on Base E-Stop terminals. 2. Check terminals for damage at E-stop terminals, and on Base Bosch ECU Connector (-C27-XC1_PCP, Pin 14/96 and -C27-XC2PCP, Pin 28/58). 3. Check Continuity of wire #3043A-#3043 and #6048 between Bosch Base ECU and E-Stop terminals. 4. Check operation of E-Stop switch to ensure correct switching. Contacts should be normally closed during normal operation (Unpressed) and Open contacts when switch is pressed. Switch terminal attached to wire #3043 should be 12V (unpressed) and 0V (pressed). Switch terminal attached to wire #6048 should be 0V (GND) (Unpressed) and open circuit to GND when pressed. IF fault found, check operation of switch with multimeter, checking the closed and open conditions.   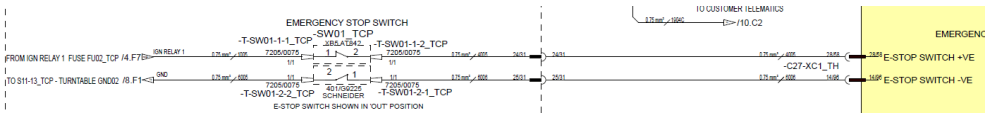 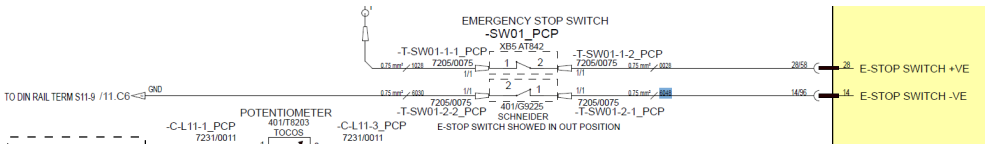

5.1.202 B1236-2F

Error code:	**B1236-2F**
ECU	Base ECU
Description :	Oscillating Axle - Axle Lock Pressure Sensor Failure.

© 2025 Enter your company name

Component :	Oscillating Axle Pressure Sensor
Vehicle reaction:	Detect failure mode; Prevent all Raise, Extend and Slew; In Raised or Slew position - prevent drive & steer; In Stowed and Forward position - allow drive
Possible Cause:	1. A short circuit within the wiring harness 2. A short circuit within the harness connectors 3. Water damage/ingress within the harness connectors 4. Damaged component
Service Action:	1. Output voltage of pressure sensor is 0.5 - 4.5VDC. Disconnect interconnect connectors -C214_TH and -C214_TH. Measure voltage at pin 4/4 (Wire #4012) on both connectors. If one of the measurements is above 4.5VDC then there is a short to high on that connection. Trace the fault back to where there is a short circuit to high. 2. Check interconnects -C214_TH and -C214_TH for any damage, shorts, debris or stray wire. Check the Base Bosch ECU connector (58-way) for any damage, bent pins debris etc. Check pin 27/58. 3. Check all above connectors for any water ingress. 4. Check the pressure sensor for damage or malfunction. Replace component.  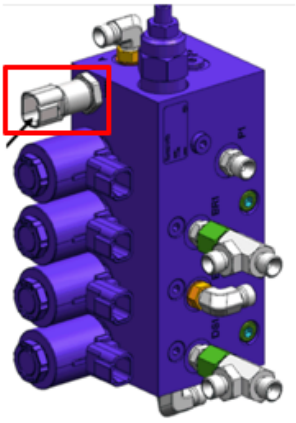 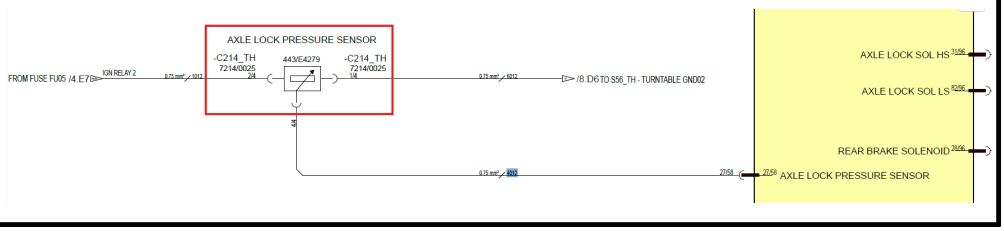

© 2025 Enter your company name

5.1.203 B1238-2F

Error code:	B1238-2F
ECU	Base ECU
Description:	Oscillating Axle - Axle Lock Pressure Sensor Output is less than 1v when it should be greater than 1v.
Component:	Oscillating Axle Pressure Sensor
Vehicle reaction:	Detect failure mode; Prevent all Raise, Extend and Slew; In Raised or Slew position - prevent drive & steer; In Stowed and Forward position - allow drive
Possible Cause:	1. A short circuit within the wiring harness 2. A short circuit within the harness connectors 3. Water damage/ingress within the harness connectors 4. Damaged component
Service Action:	1. Output voltage of pressure sensor is 0.5 - 4.5VDC. Disconnect interconnect connectors -C214_TH and -C214_TH. Measure voltage at pin 4/4 (Wire #4012) on both connectors. If one of the measurements is above 4.5VDC then there is a short to high on that connection. Trace the fault back to where there is a short circuit to high. 2. Check interconnects -C214_TH and -C214_TH for any damage, shorts, debris or stray wire. Check the Base Bosch ECU connector (58-way) for any damage, bent pins debris etc. Check pin 27/58. 3. Check all above connectors for any water ingress. 4. Check the pressure sensor for damage or malfunction. Replace component.

© 2025 Enter your company name



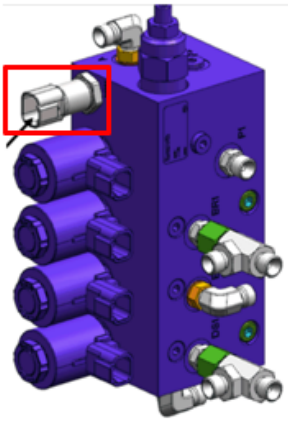



5.1.204 B1239-17

Error code:	B1239-17
ECU	Platform ECU
Description:	Engine Start/Stop - Platform Engine Start/Stop Button Short Circuit to High.
Component:	Engine Start/Stop Button
Vehicle reaction:	Detect failure mode; Ignore input (switch off engine)
Possible Cause:	1. A short circuit within the wiring harness 2. A short circuit within the harness connectors 3. Water damage/ingress within the harness connectors 4. Damaged component
Service Action:	1. Disconnect connector -C212-2_PCP from the rear of the Engine Start/Stop Button on the Platform Control Panel. Measure voltage at terminal. If voltage is high >12V, check wire #0086 to Platform Bosch ECU pin 50/58.

© 2025 Enter your company name

	2. Check condition of pins in Platform Bosch ECU. Check for Bent pins, debris or stray wires causing a short. 3. Check for water ingress in the Platform Bosch ECU Connectors. 4. Check Switch for damage or any loose wiring in the control panel.  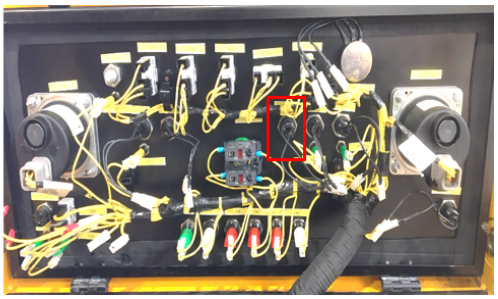 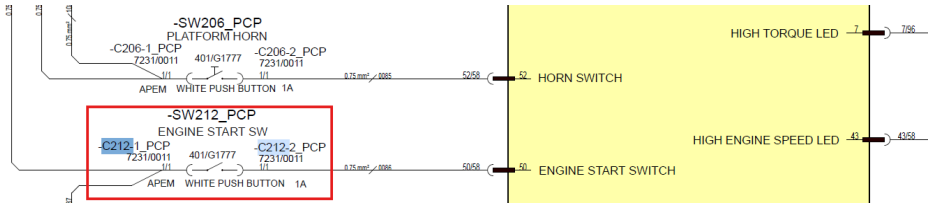

5.1.205 B1240-16

Error code:	B1240-16
ECU	Platform ECU
Description:	Engine Start/Stop - Platform Engine Start/Stop Button Short Circuit to Low.
Component:	Engine Start/Stop Button
Vehicle reaction:	Detect failure mode; Ignore input (switch off engine)
Possible Cause:	1. A short circuit within the wiring harness 2. A short circuit to the chassis 3. A short circuit within the harness connectors 4. Water damage/ingress within the harness connectors 5. Damaged component
Service Action:	1. Disconnect connector -C212-2_PCP from the rear of the Engine Start/Stop Button on the Platform Control Panel. Measure resistance from Terminal to GND. If a short exists, check wire #0086 to Platform Bosch ECU pin 50/58. 2. Check Wire #0086 is not shorted to GND / Chassis. Check for abrasions and pinching.

© 2025 Enter your company name

	3. Check condition of pins in Platform Bosch ECU. Check for Bent pins, debris or stray wires causing a short. 4. Check for water ingress in the Platform Bosch ECU Connectors. 5. Check Switch for damage or shorting to connector -C212-2_PCP. 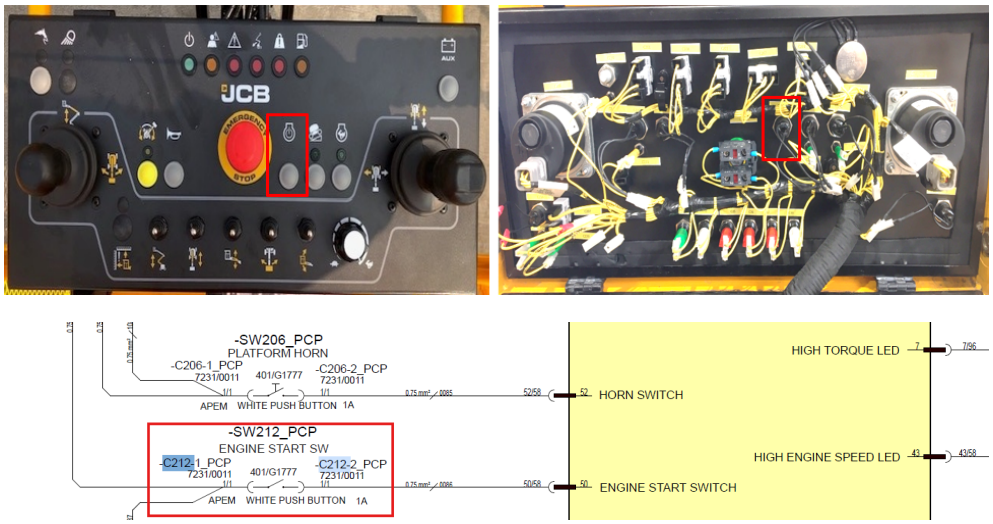

5.1.206 B1241-24

Error code:	B1241-24
ECU	Platform ECU
Description:	Engine Start/Stop - Platform Engine Start/Stop Button Stuck for >10s.
Component:	Engine Start/Stop Button
Vehicle reaction:	Detect failure mode; Ignore input (switch off engine)
Possible Cause:	1. A short circuit within the wiring harness 2. A short circuit within the harness connectors 3. Water damage/ingress within the harness connectors 4. Damaged component
Service Action:	1. Disconnect connector -C212-2_PCP from the rear of the Engine Start/Stop Button on the Platform Control Panel. Measure voltage at terminal. If voltage is high >12V, check wire #0086 to Platform Bosch ECU pin 50/58. 2. Check condition of pins in Platform Bosch ECU. Check for Bent pins, debris or stray wires causing a short. 3. Check for water ingress in the Platform Bosch ECU Connectors.

© 2025 Enter your company name

	4. Check operation of the system. Check for physical damage to the Engine Start/Stop Button, connectors and other harness components. 

5.1.207 **B1242-17**

Error code:	**B1242-17**
ECU	Platform ECU
Description :	Platform Level - Platform Level Switch Raise Short Circuit to High.
Component :	Platform Level Switch
Vehicle reaction:	Before operation: Ignore the input (but not output as it can be operated from where there is no fault) After operation: Refer to 10V System Short Circuit Fault reaction
Possible Cause:	1. A short circuit within the wiring harness 2. A short circuit within the harness connectors 3. Water damage/ingress within the harness connectors 4. Damaged component
Service Action:	1. Disconnect connector -C204-1_PCP from the rear of the Platform Level Switch on the Platform Control Panel. Measure voltage at terminal. If voltage is high >12V, check wire #0080 to Platform Bosch ECU pin 10/58. 2. Check condition of pins in Platform Bosch ECU. Check for Bent pins, debris or stray wires causing a short. 3. Check for water ingress in the Platform Bosch ECU Connectors. 4. Check Switch for damage or any loose wiring in the control panel.

© 2025 Enter your company name



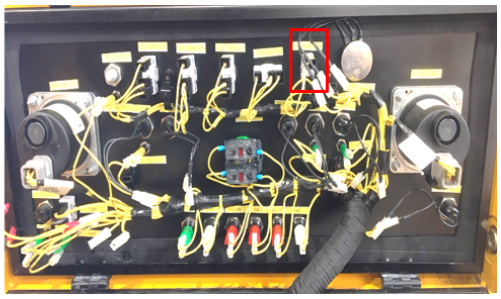

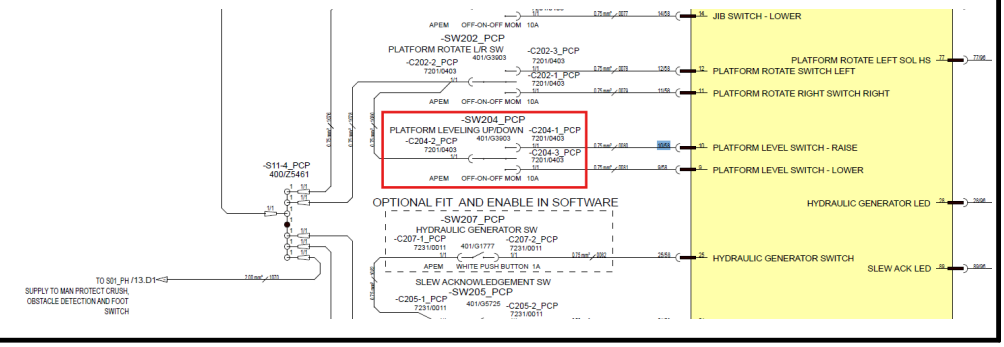

5.1.208 B1243-17

Error code:	B1243-17
ECU	Platform ECU
Description:	Platform Level - Platform Level Switch Lower Short Circuit to High.
Component:	Platform Level Switch
Vehicle reaction:	Before operation: Ignore the input (but not output as it can be operated from where there is no fault) After operation: Refer to 10V System Short Circuit Fault reaction
Possible Cause:	1. A short circuit within the wiring harness 2. A short circuit within the harness connectors 3. Water damage/ingress within the harness connectors 4. Damaged component
Service Action:	1. Disconnect connector -C204-3_PCP from the rear of the Platform Level Switch on the Platform Control Panel. Measure voltage at terminal. If voltage is high >12V, check wire #0081 to Platform Bosch ECU pin 9/58. 2. Check condition of pins in Platform Bosch ECU. Check for Bent pins, debris or stray wires causing a short. 3. Check for water ingress in the Platform Bosch ECU Connectors. 4. Check Switch for damage or any loose wiring in the control panel.

© 2025 Enter your company name



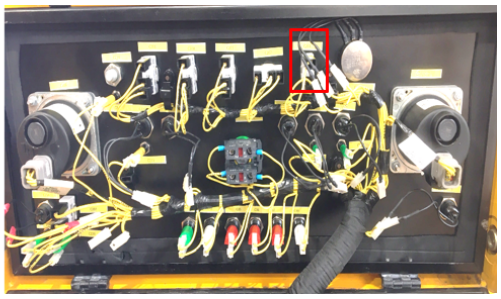

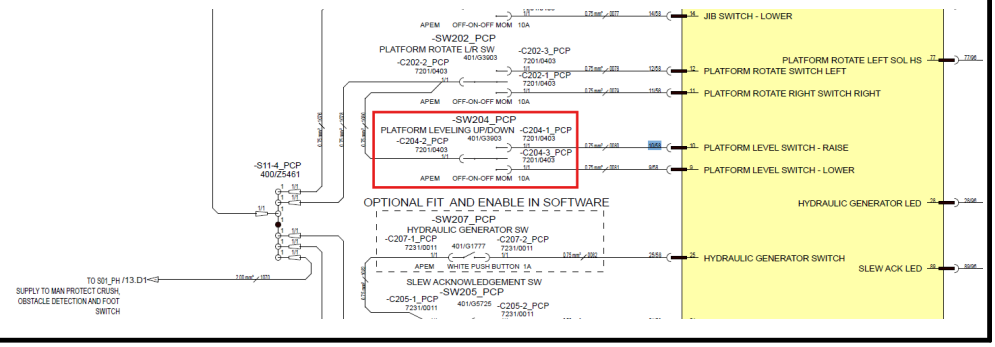

5.1.209 B1244-92

Error code:	B1244-92
ECU	Platform ECU
Description:	Platform Level - Platform Level Switch Raise & Lower Both Activated (5-10v).
Component:	Platform Level Switch
Vehicle reaction:	Ignore the input (but not output as it can be operated from where there is no fault)
Possible Cause:	1. A short circuit within the wiring harness 2. A short circuit within the harness connectors 3. Water damage/ingress within the harness connectors 4. Damaged component
Service Action:	1. Disconnect connector -C204-1_PCP and -C204-3_PCP from the rear of the Platform Level Switch on the Platform Control Panel. Measure voltage at both terminals. If voltage is high >12V, check wires #0080 & #0081 to Platform Bosch ECU pin 10/58 & pin 9/58. 2. Check condition of pins in Platform Bosch ECU. Check for Bent pins, debris or stray wires causing a short. 3. Check for water ingress in the Platform Bosch ECU Connectors. 4. Check Switch for damage or any loose wiring in the control panel.

© 2025 Enter your company name



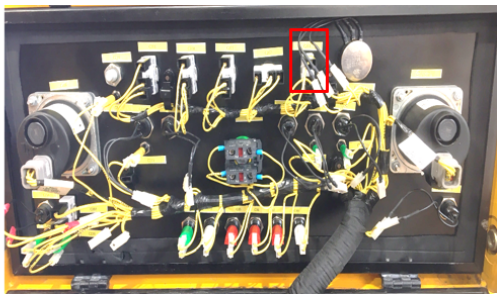

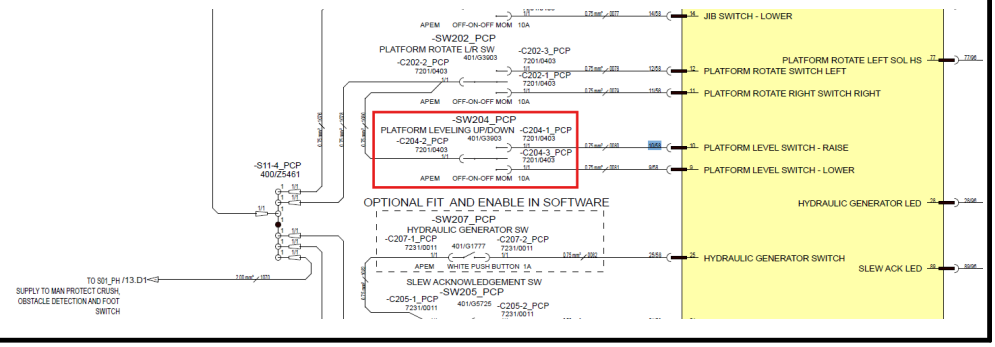

5.1.210 B1245-16

Error code:	B1245-16
ECU	Platform ECU
Description:	Platform Level - Platform Level Switch Raise Short Circuit to Low.
Component:	Platform Level Switch
Vehicle reaction:	Before operation: Ignore the input (but not output as it can be operated from where there is no fault) After operation: Refer to 10V System Short Circuit Fault reaction
Possible Cause:	1. A short circuit within the wiring harness 2. A short circuit to the chassis 3. A short circuit within the harness connectors 4. Water damage/ingress within the harness connectors 5. Damaged component
Service Action:	1. Disconnect connector -C204-1_PCP from the rear of the Platform Level Switch on the Platform Control Panel. Measure resistance from Terminal to GND. If a short exists, check wire #0080 to Platform Bosch ECU pin 10/58. 2. Check Wire #0080 is not shorted to GND / Chassis. Check for abrasions and pinching. 3. Check condition of pins in Platform Bosch ECU. Check for Bent pins,

© 2025 Enter your company name

	debris or stray wires causing a short. 4. Check for water ingress in the Platform Bosch ECU Connectors. 5. Check Switch for damage or shorting to connector -C204-1_PCP  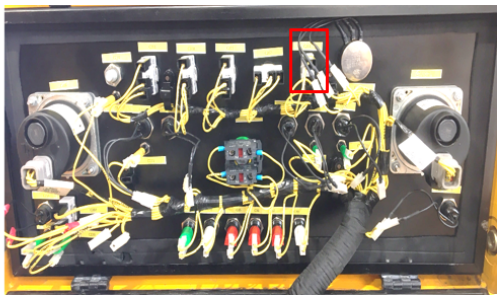 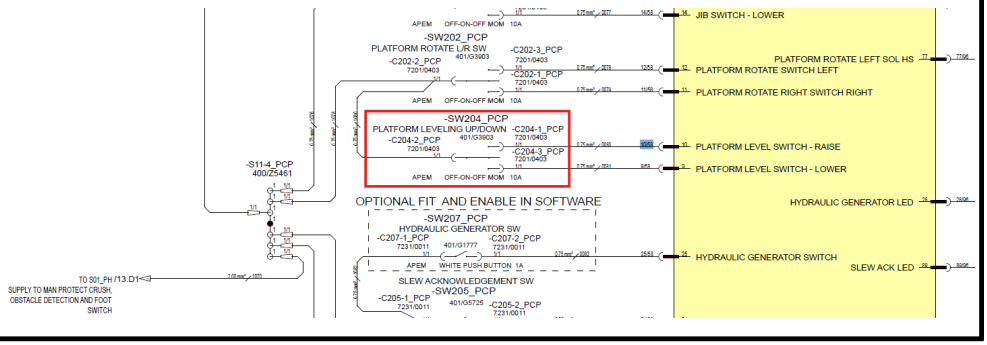

5.1.211 B1246-16

Error code:	B1246-16
ECU	Platform ECU
Description:	Platform Level - Platform Level Switch Lower Short Circuit to Low.
Component:	Platform Level Switch
Vehicle reaction:	Before operation: Ignore the input (but not output as it can be operated from where there is no fault) After operation: Refer to 10V System Short Circuit Fault reaction
Possible Cause:	1. A short circuit within the wiring harness 2. A short circuit to the chassis 3. A short circuit within the harness connectors 4. Water damage/ingress within the harness connectors 5. Damaged component
Service Action:	1. Disconnect connector -C204-3_PCP from the rear of the Platform Level Switch on the Platform Control Panel. Measure resistance from Terminal to

© 2025 Enter your company name

	GND. If a short exists, check wire #0081 to Platform Bosch ECU pin 9/58. 2. Check Wire #0081 is not shorted to GND / Chassis. Check for abrasions and pinching. 3. Check condition of pins in Platform Bosch ECU. Check for Bent pins, debris or stray wires causing a short. 4. Check for water ingress in the Platform Bosch ECU Connectors. 5. Check Switch for damage or shorting to connector -C204-3_PCP  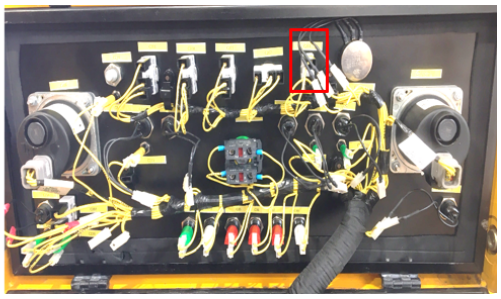 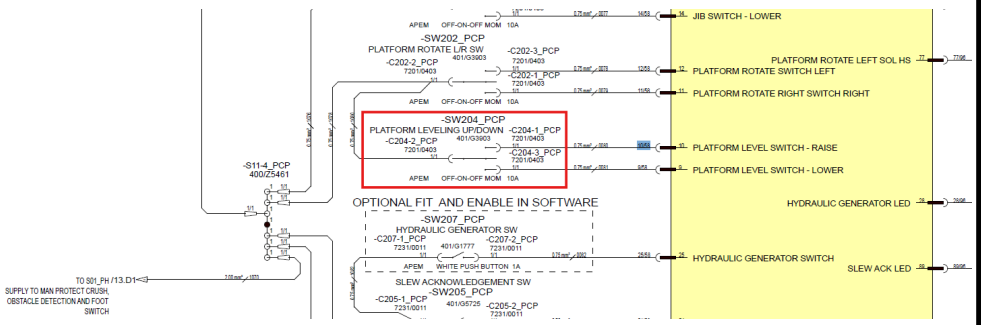

5.1.212 B1247-17

Error code:	B1247-17
ECU	Platform ECU
Description:	ARTICULATED BOOM RAISE Switch Short Circuit to High
Component:	ARTICULATED BOOM RAISE Switch
Vehicle reaction:	Input from Platform control station will be disabled, output can still be operated from platform control station.
Possible Cause:	1. A short circuit within the wiring harness 2. A short circuit to the chassis 3. A short circuit within the harness connectors 4. Water damage/ingress within the harness connectors 5. Damaged component

© 2025 Enter your company name

Service Action:	1. Disconnect connector -C201-2_PCP from the rear of the ARTICULATED BOOM RAISE Switch on the Base Control Panel. Measure resistance from Terminal to GND. If a short exists, check wire #0073 to Base Bosch ECU pin 34/58. 2. Check Wire #0073 is not shorted to GND / Chassis. Check for abrasions and pinching. 3. Check condition of pins in Platform Bosch ECU. Check for Bent pins, debris or stray wires causing a short. 4. Check for water ingress in the Platform Bosch ECU Connectors. 5. Check Switch for damage or shorting to connector -C201-1_PCP 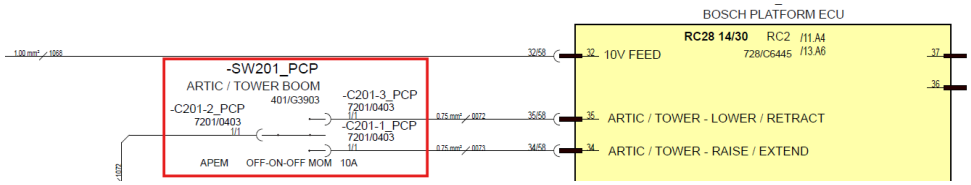

5.1.213 B1248-17

Error code:	**B1248-17**
ECU	Platform ECU
Description:	ARTICULATED BOOM RAISE & LOWER Switches both activated (5 - 10V)
Component:	ARTICULATED BOOM RAISE & LOWER
Vehicle reaction:	Input from Platform control station will be disabled, output can still be operated from platform control station.
Possible Cause:	1. A short circuit within the wiring harness 2. A short circuit to the chassis 3. A short circuit within the harness connectors 4. Water damage/ingress within the harness connectors 5. Damaged component
Service Action:	1. Disconnect connector -C201-2_PCP from the rear of the ARTICULATED BOOM RAISE Switch on the Base Control Panel. Measure resistance from Terminal to GND. If a short exists, check wire #0073 & #0072 to Base Bosch ECU pin 34/58 & 35/58. 2. Check Wire #0073 & #0072 is not shorted to GND / Chassis. Check for abrasions and pinching. 3. Check condition of pins in Platform Bosch ECU. Check for Bent pins, debris or stray wires causing a short. 4. Check for water ingress in the Platform Bosch ECU Connectors.

© 2025 Enter your company name

	5. Check Switch for damage or shorting to connector -C201-1_PCP & -C201-3_PCP 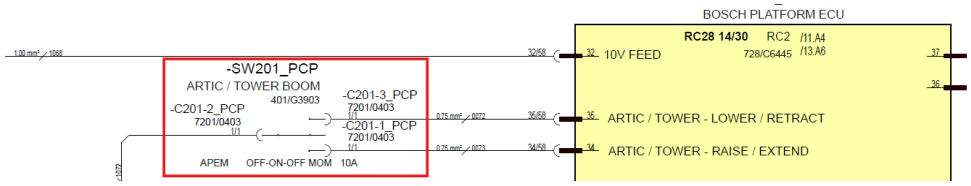

5.1.214 B1249-92

Error code:	B1249-92
ECU	Platform ECU
Description:	ARTICULATED BOOM RAISE & LOWER Switches both activated (5 - 10V)
Component:	ARTICULATED BOOM RAISE & LOWER
Vehicle reaction:	Input from Platform control station will be disabled, output can still be operated from platform control station.
Possible Cause:	1. A short circuit within the wiring harness 2. A short circuit to the chassis 3. A short circuit within the harness connectors 4. Water damage/ingress within the harness connectors 5. Damaged component
Service Action:	1. Disconnect connector -C201-2_PCP from the rear of the ARTICULATED BOOM RAISE Switch on the Base Control Panel. Measure resistance from Terminal to GND. If a short exists, check wire #0073 & #0072 to Base Bosch ECU pin 34/58 & 35/58. 2. Check Wire #0073 & #0072 is not shorted to GND / Chassis. Check for abrasions and pinching. 3. Check condition of pins in Platform Bosch ECU. Check for Bent pins, debris or stray wires causing a short. 4. Check for water ingress in the Platform Bosch ECU Connectors. 5. Check Switch for damage or shorting to connector -C201-1_PCP & -C201-3_PCP 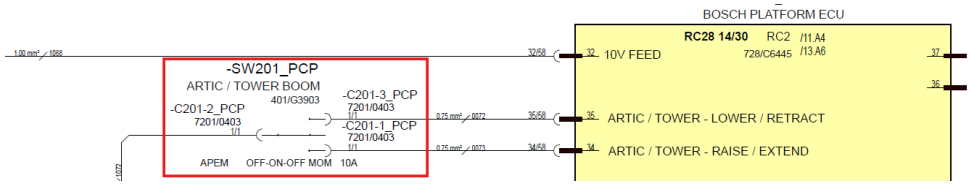

© 2025 Enter your company name

5.1.215 B1250-16

Error code:	B1250-16
ECU	Platform ECU
Description:	ARTICULATED BOOM RAISE Switch Short Circuit to Low
Component:	ARTICULATED BOOM RAISE Switch
Vehicle reaction:	Before operation: Ignore the input (but not output as it can be operated from where there is no fault) After operation: Refer to 10V System Short Circuit Fault reaction
Possible Cause:	1. A short circuit within the wiring harness 2. A short circuit to the chassis 3. A short circuit within the harness connectors 4. Water damage/ingress within the harness connectors 5. Damaged component
Service Action:	1. Disconnect connector -C201-2_PCP from the rear of the ARTICULATED BOOM RAISE Switch on the Platform Control Panel. Measure resistance from Terminal to GND. If a short exists, check wire #0073 to Platform Bosch ECU pin 34/58. 2. Check Wire #0073 is not shorted to GND / Chassis. Check for abrasions and pinching. 3. Check condition of pins in Platform Bosch ECU. Check for Bent pins, debris or stray wires causing a short. 4. Check for water ingress in the Platform Bosch ECU Connectors. 5. Check Switch for damage or shorting to connector -C201-1_PCP 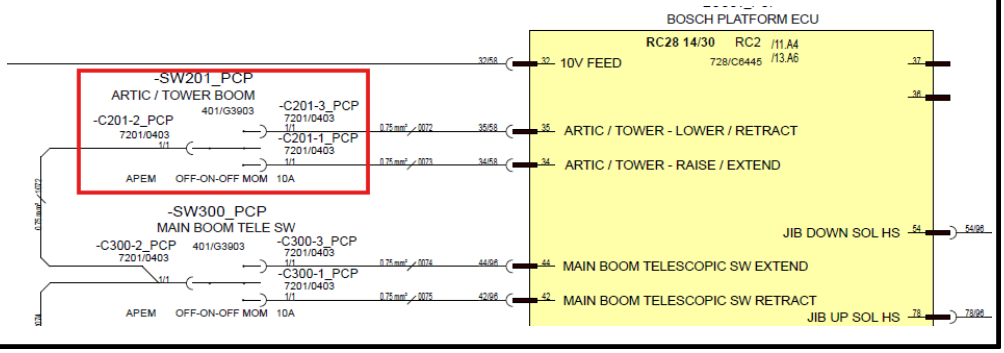

5.1.216 B1251-16

Error code:	B1251-16

© 2025 Enter your company name

ECU	Platform ECU
Description:	ARTICULATED BOOM LOWER Switch Short Circuit to Low
Component:	ARTICULATED BOOM LOWER Switch
Vehicle reaction:	Before operation: Ignore the input (but not output as it can be operated from where there is no fault) After operation: Refer to 10V System Short Circuit Fault reaction
Possible Cause:	1. A short circuit within the wiring harness 2. A short circuit to the chassis 3. A short circuit within the harness connectors 4. Water damage/ingress within the harness connectors 5. Damaged component
Service Action:	1. Disconnect connector -C201-2_PCP from the rear of the ARTICULATED BOOM LOWER Switch on the Platform Control Panel. Measure resistance from Terminal to GND. If a short exists, check wire #0072 to Platform Bosch ECU pin 35/58. 2. Check Wire #0072 is not shorted to GND / Chassis. Check for abrasions and pinching. 3. Check condition of pins in Platform Bosch ECU. Check for Bent pins, debris or stray wires causing a short. 4. Check for water ingress in the Platform Bosch ECU Connectors. 5. Check Switch for damage or shorting to connector -C201-3_PCP 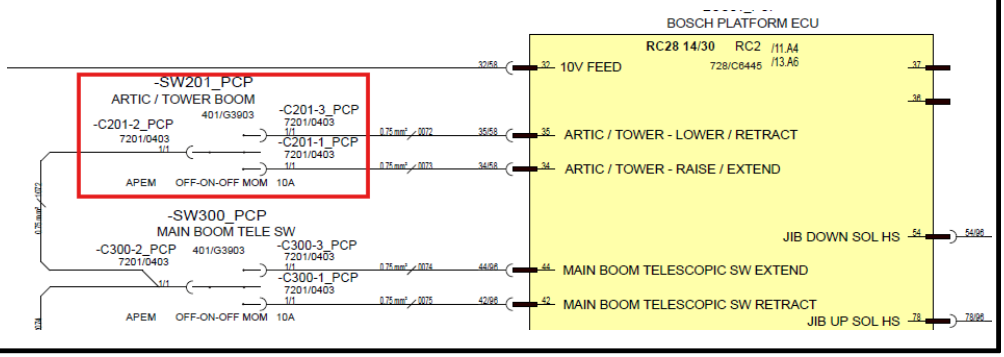

5.1.217 **B1252-17**

Error code:	**B1252-17**
ECU	Platform ECU

© 2025 Enter your company name

Description:	MAIN BOOM TELESCOPE EXTEND Switch SC to High.
Component:	MAIN BOOM TELESCOPE EXTEND
Vehicle reaction:	Before operation: Ignore the input (but not output as it can be operated from where there is no fault) After operation: Refer to 10V System Short Circuit Fault reaction
Possible Cause:	1. A short circuit within the wiring harness 2. A short circuit within the harness connectors 3. Water damage/ingress within the harness connectors 4. Damaged component
Service Action:	1. Disconnect connector -C300-3_PCP from the rear of the Main Boom Telescopic Switch on the Platform Control Panel. Measure voltage at terminal. If voltage is high >12V, check wire #0074 to Platform Bosch ECU pin 44/96. 2. Check condition of pins in Platform Bosch ECU. Check for Bent pins, debris or stray wires causing a short. 3. Check for water ingress in the Platform Bosch ECU Connectors. 4. Check Switch for damage or any loose wiring in the control panel.  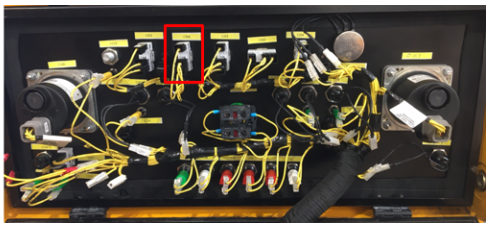 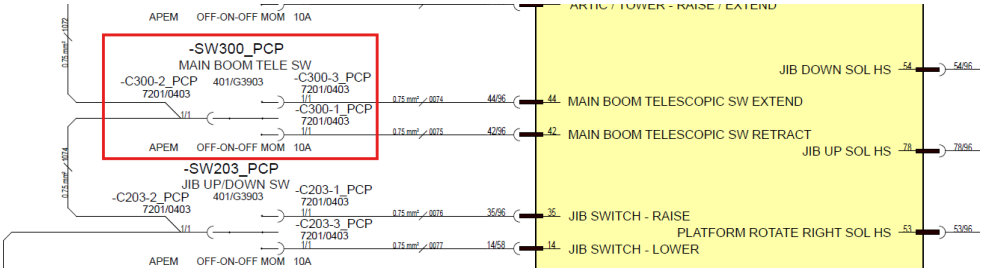

5.1.218 B1253-17

Error code:	**B1253-17**
ECU	Platform ECU
Description:	MAIN BOOM TELESCOPE RETRACT Switch SC to High.

© 2025 Enter your company name

Component :	MAIN BOOM TELESCOPE RETRACT Switch
Vehicle reaction:	Before operation: Ignore the input (but not output as it can be operated from where there is no fault) After operation: Refer to 10V System Short Circuit Fault reaction
Possible Cause:	1. A short circuit within the wiring harness 2. A short circuit within the harness connectors 3. Water damage/ingress within the harness connectors 4. Damaged component
Service Action:	1. Disconnect connector -C300-1_PCP from the rear of the Main Boom Telescopic Switch on the Platform Control Panel. Measure voltage at terminal. If voltage is high >12V, check wire #0075 to Platform Bosch ECU pin 42/96. 2. Check condition of pins in Platform Bosch ECU. Check for Bent pins, debris or stray wires causing a short. 3. Check for water ingress in the Platform Bosch ECU Connectors. 4. Check Switch for damage or any loose wiring in the control panel.  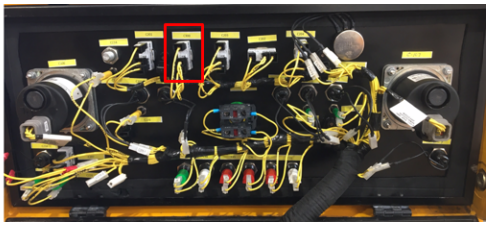 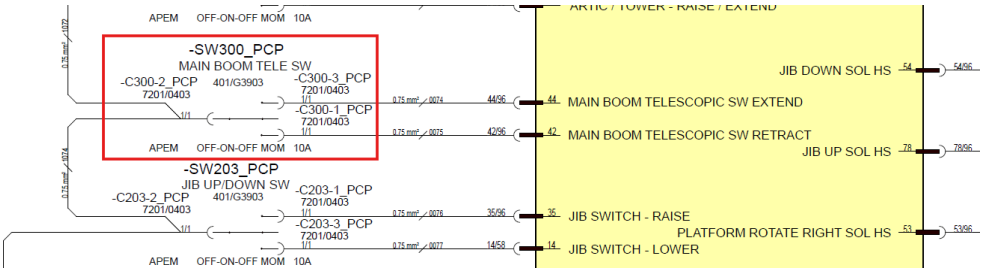

5.1.219 B1254-92

Error code:	**B1254-92**
ECU	Platform ECU
Description :	MAIN BOOM TELESCOPE EXTEND & RETRACT Switches both activated (5 - 10V).

© 2025 Enter your company name

Component :	MAIN BOOM TELESCOPE EXTEND & RETRACT Switches
Vehicle reaction:	Ignore the input (but not output as it can be operated from where there is no fault)
Possible Cause:	1. A short circuit within the wiring harness 2. A short circuit within the harness connectors 3. Water damage/ingress within the harness connectors 4. Damaged component
Service Action:	1. Disconnect connector -C300-3_PCP and -C300-1_PCP from the rear of the Platform Rotate Switch on the Platform Control Panel. Measure voltage at both terminals. If voltage is high >12V, check wires #0074 & #0075 to Platform Bosch ECU pin 44/96 & pin 42/96. 2. Check condition of pins in Platform Bosch ECU. Check for Bent pins, debris or stray wires causing a short. 3. Check for water ingress in the Platform Bosch ECU Connectors. 4. Check Switch for damage or any loose wiring in the control panel.  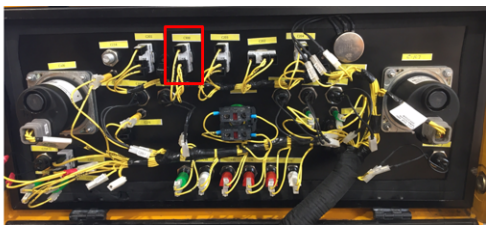 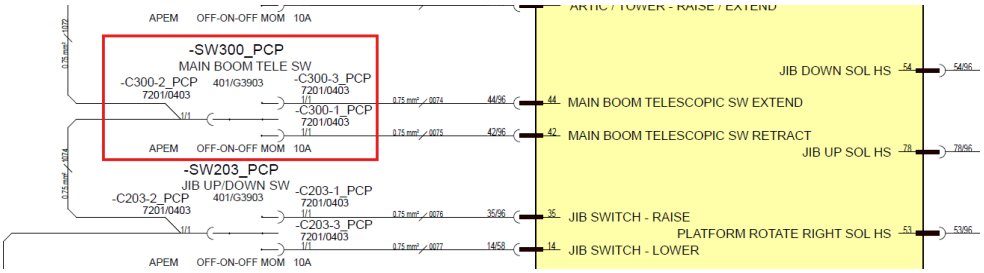

5.1.220 B1255-16

Error code:	**B1255-16**
ECU	Platform ECU
Description :	MAIN BOOM TELESCOPE EXTEND Switch SC to Low.
Component :	MAIN BOOM TELESCOPE EXTEND

© 2025 Enter your company name

Vehicle reaction:	Before operation: Ignore the input (but not output as it can be operated from where there is no fault) After operation: Refer to 10V System Short Circuit Fault reaction
Possible Cause:	1. A short circuit within the wiring harness 2. A short circuit to the chassis 3. A short circuit within the harness connectors 4. Water damage/ingress within the harness connectors 5. Damaged component
Service Action:	1. Disconnect connector -C300-3_PCP from the rear of the Main Boom Telescopic Switch on the Platform Control Panel. Measure resistance from Terminal to GND. If a short exists, check wire #0074 to Platform Bosch ECU pin 44/96. 2. Check Wire #0074 is not shorted to GND / Chassis. Check for abrasions and pinching. 3. Check condition of pins in Platform Bosch ECU. Check for Bent pins, debris or stray wires causing a short. 4. Check for water ingress in the Platform Bosch ECU Connectors. 5. Check Switch for damage or shorting to connector -C300-2_PCP  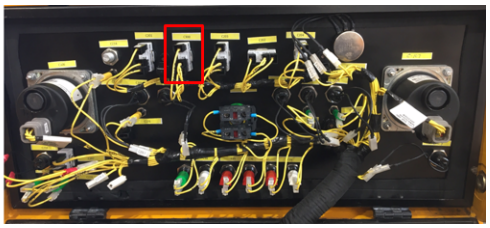 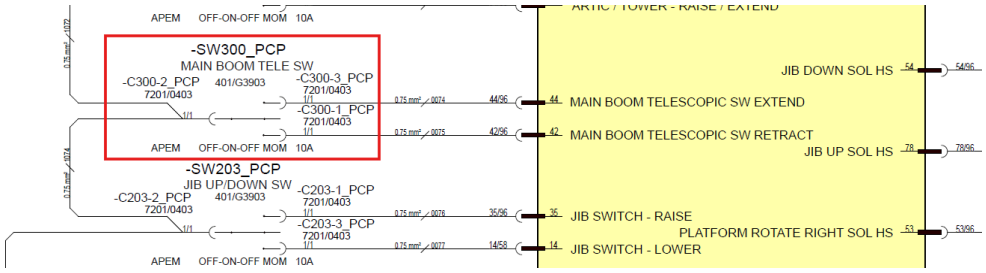

5.1.221 B1256-16

Error code:	**B1256-16**
ECU	Platform ECU
Description:	MAIN BOOM TELESCOPE RETRACT Switch SC to Low.
Component:	MAIN BOOM TELESCOPE RETRACT Switch

© 2025 Enter your company name

Vehicle reaction:	Before operation: Ignore the input (but not output as it can be operated from where there is no fault) After operation: Refer to 10V System Short Circuit Fault reaction
Possible Cause:	1. A short circuit within the wiring harness 2. A short circuit to the chassis 3. A short circuit within the harness connectors 4. Water damage/ingress within the harness connectors 5. Damaged component
Service Action:	1. Disconnect connector -C300-1_TCP from the rear of the Platform Rotate Switch on the Platform Control Panel. Measure resistance from Terminal to GND. If a short exists, check wire #0075 to Platform Bosch ECU pin 42/96. 2. Check Wire #0075 is not shorted to GND / Chassis. Check for abrasions and pinching. 3. Check condition of pins in Platform Bosch ECU. Check for Bent pins, debris or stray wires causing a short. 4. Check for water ingress in the Platform Bosch ECU Connectors. 5. Check Switch for damage or shorting to connector -C300-1_PCP  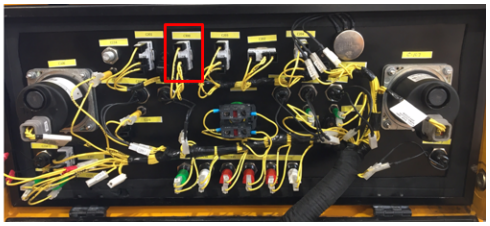 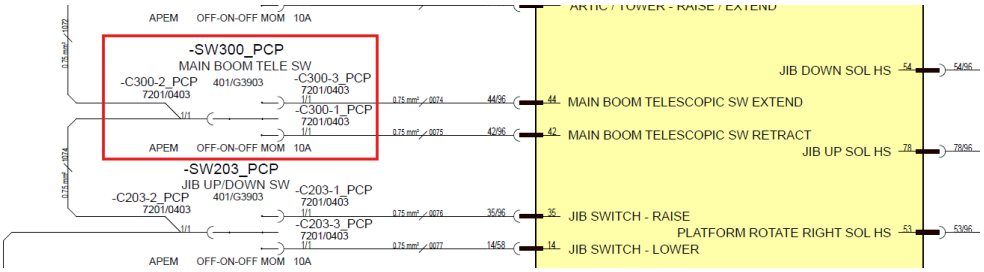

5.1.222 B1257-17

Error code:	**B1257-17**
ECU	Platform ECU
Description:	Platform Rotate Switch Right Short Circuit to High.
Component:	Platform Rotate Switch

© 2025 Enter your company name

Vehicle reaction:	Before operation: Ignore the input (but not output as it can be operated from where there is no fault) After operation: Refer to 10V System Short Circuit Fault reaction
Possible Cause:	1. A short circuit within the wiring harness 2. A short circuit within the harness connectors 3. Water damage/ingress within the harness connectors 4. Damaged component
Service Action:	1. Disconnect connector -C202-1_PCP from the rear of the Platform Rotate Switch on the Platform Control Panel. Measure voltage at terminal. If voltage is high >12V, check wire #0079 to Platform Bosch ECU pin 11/58. 2. Check condition of pins in Platform Bosch ECU. Check for Bent pins, debris or stray wires causing a short. 3. Check for water ingress in the Platform Bosch ECU Connectors. 4. Check Switch for damage or any loose wiring in the control panel.  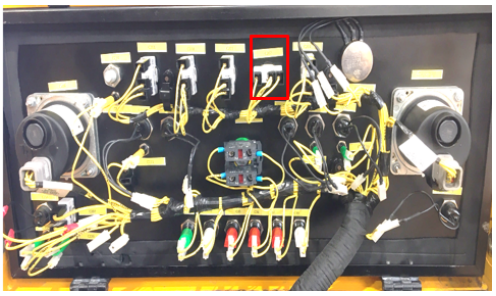 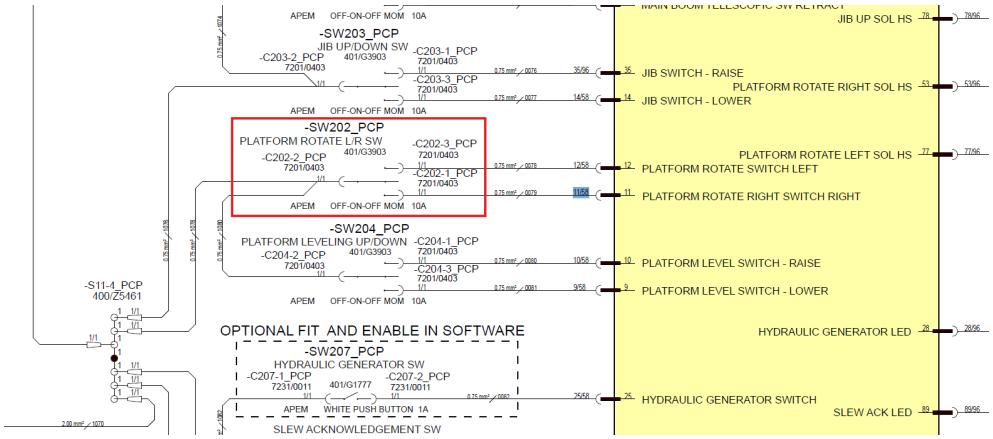

5.1.223 **B1258-17**

Error code:	**B1258-17**
ECU	Platform ECU
Description :	Platform Rotate Switch Left Short Circuit to High.

© 2025 Enter your company name

Component :	Platform Rotate Switch
Vehicle reaction:	Before operation: Ignore the input (but not output as it can be operated from where there is no fault) After operation: Refer to 10V System Short Circuit Fault reaction
Possible Cause:	1. A short circuit within the wiring harness 2. A short circuit within the harness connectors 3. Water damage/ingress within the harness connectors 4. Damaged component
Service Action:	1. Disconnect connector -C202-1_PCP from the rear of the Platform Rotate Switch on the Platform Control Panel. Measure voltage at terminal. If voltage is high >12V, check wire #0078 to Platform Bosch ECU pin 12/58. 2. Check condition of pins in Platform Bosch ECU. Check for Bent pins, debris or stray wires causing a short. 3. Check for water ingress in the Platform Bosch ECU Connectors. 4. Check Switch for damage or any loose wiring in the control panel.  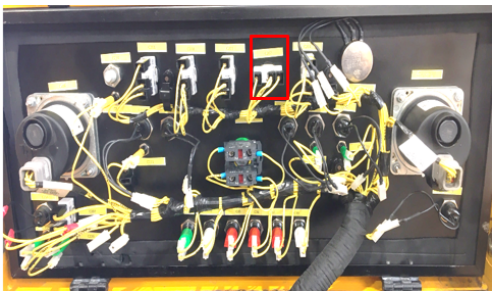 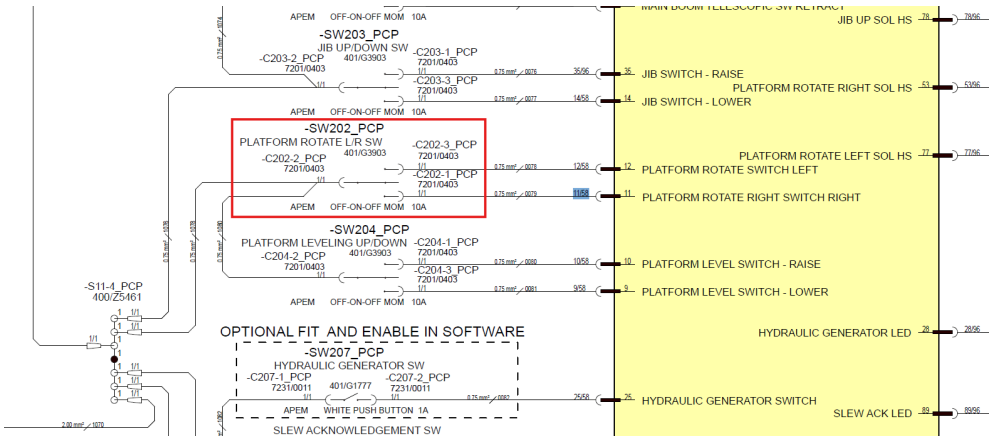

5.1.224 **B1259-92**

Error code:	**B1259-92**

© 2025 Enter your company name

ECU	Base ECU
Description:	PLATFORM ROTATE RIGHT & LEFT Switches both activated (5 - 10V)
Component:	PLATFORM ROTATE RIGHT & LEFT Switches
Vehicle reaction:	Ignore the input (but not output as it can be operated from where there is no fault)
Possible Cause:	1. A short circuit within the wiring harness 2. A short circuit within the harness connectors 3. Water damage/ingress within the harness connectors 4. Damaged component
Service Action:	1. Measure voltage at Platform Rotate Left and Right terminals, -C202-1_PCP & -C202-3_PCP. With switch not pressed, terminal voltage should be approx 2.5-3.0V. With switch pressed, voltage should rise to 10V. If Voltage at terminal is constant 10V or higher, then there is a short to high either at the switch, wiring harness or at the Platform Bosch ECU connectors (Pins 11/58 & 12/58). If voltage is high, remove -C202-2_PCP, if voltage now drops, then switch is faulty, else, the fault is at the harness to the Bosch ECU. 2. Check Platform Bosch ECU Connectors for bent pins or stray wires that are potentially causing a short circuit. 3. Check connectors for any sign of water ingress. 4. Check function of switch, check wiring from switch to ECU, checking for abrasions and pinching or any form of damage. 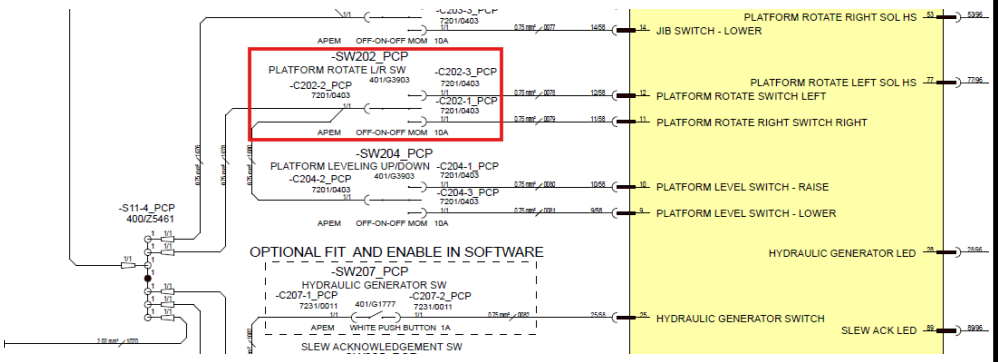

5.1.225 **B1260-16**

Error code:	**B1260-16**
ECU	Platform ECU

© 2025 Enter your company name

Description :	Platform Rotate Switch Right Short Circuit to Low.
Component :	Platform Rotate Switch
Vehicle reaction:	Before operation: Ignore the input (but not output as it can be operated from where there is no fault) After operation: Refer to 10V System Short Circuit Fault reaction
Possible Cause:	1. A short circuit within the wiring harness 2. A short circuit to the chassis 3. A short circuit within the harness connectors 4. Water damage/ingress within the harness connectors 5. Damaged component
Service Action:	1. Disconnect connector -C202-1_PCP from the rear of the Platform Rotate Switch on the Platform Control Panel. Measure resistance from Terminal to GND. If a short exists, check wire #0079 to Platform Bosch ECU pin 11/58. 2. Check Wire #0079 is not shorted to GND / Chassis. Check for abrasions and pinching. 3. Check condition of pins in Platform Bosch ECU. Check for Bent pins, debris or stray wires causing a short. 4. Check for water ingress in the Platform Bosch ECU Connectors. 5. Check Switch for damage or shorting to connector -C202-1_PCP  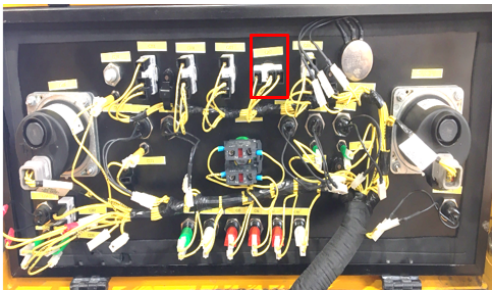 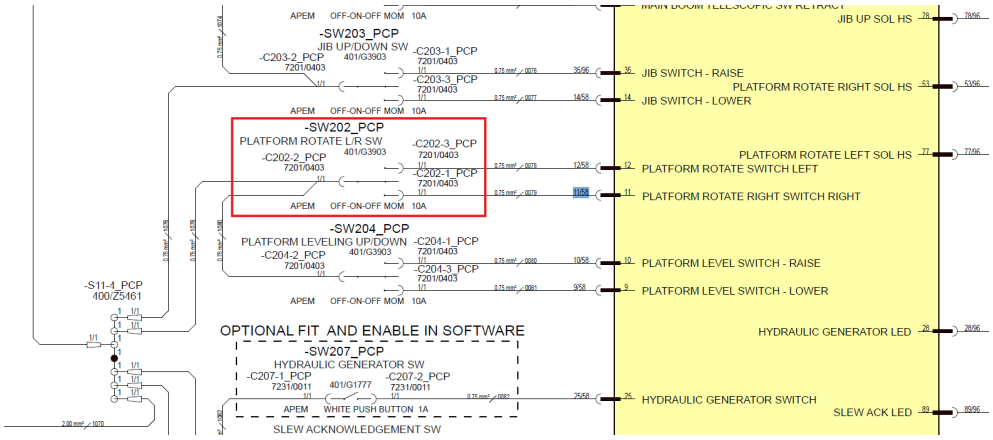

© 2025 Enter your company name

5.1.226 B1261-16

Error code:	B1261-16
ECU	Platform ECU
Description:	Platform Rotate Switch Left Short Circuit to Low.
Component:	Platform Rotate Switch
Vehicle reaction:	Before operation: Ignore the input (but not output as it can be operated from where there is no fault) After operation: Refer to 10V System Short Circuit Fault reaction
Possible Cause:	1. A short circuit within the wiring harness 2. A short circuit to the chassis 3. A short circuit within the harness connectors 4. Water damage/ingress within the harness connectors 5. Damaged component
Service Action:	1. Disconnect connector -C202-1_PCP from the rear of the Platform Rotate Switch on the Platform Control Panel. Measure resistance from Terminal to GND. If a short exists, check wire #0078 to Platform Bosch ECU pin 12/58. 2. Check Wire #0078 is not shorted to GND / Chassis. Check for abrasions and pinching. 3. Check condition of pins in Platform Bosch ECU. Check for Bent pins, debris or stray wires causing a short. 4. Check for water ingress in the Platform Bosch ECU Connectors. 5. Check Switch for damage or shorting to connector -C202-1_PCP  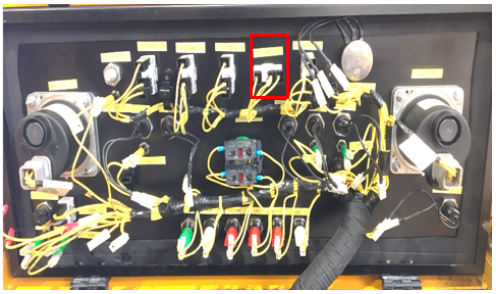

© 2025 Enter your company name

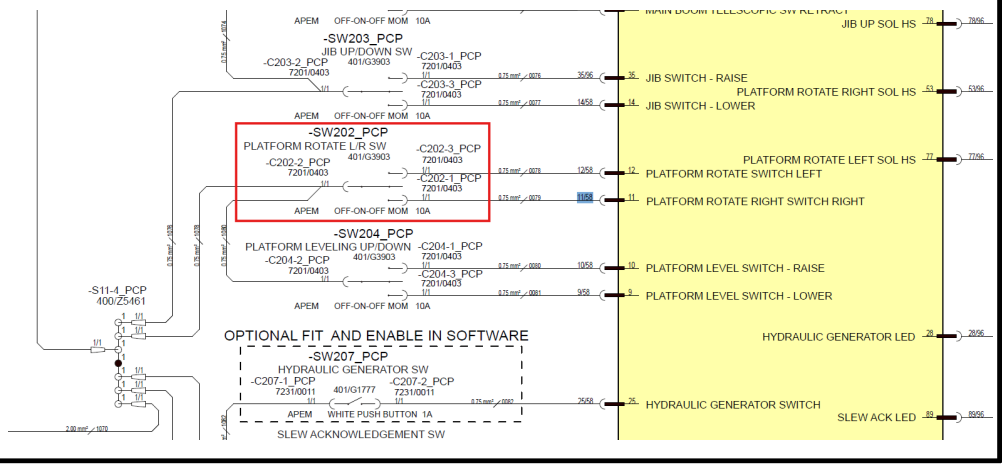

5.1.227 B1262-17

Error code:	B1262-17
ECU	Platform ECU
Description:	Jib - Jib Switch Raise Short Circuit to High.
Component:	Jib Switch
Vehicle reaction:	Before operation: Ignore the input (but not output as it can be operated from where there is no fault) After operation: Refer to 10V System Short Circuit Fault reaction
Possible Cause:	1. A short circuit within the wiring harness 2. A short circuit within the harness connectors 3. Water damage/ingress within the harness connectors 4. Damaged component
Service Action:	1. Disconnect connector -C203-1_PCP from the rear of the Jib Switch on the Platform Control Panel. Measure voltage at terminal. If voltage is high >12V, check wire #0076 to Platform Bosch ECU pin 35/96. 2. Check condition of pins in Platform Bosch ECU. Check for Bent pins, debris or stray wires causing a short. 3. Check for water ingress in the Platform Bosch ECU Connectors. 4. Check Switch for damage or any loose wiring in the control panel.

© 2025 Enter your company name



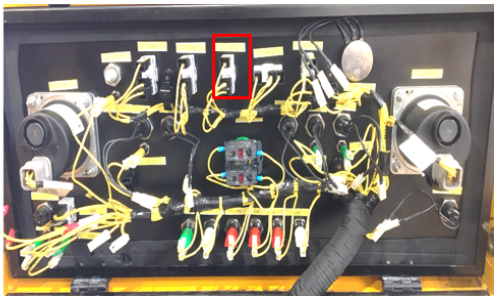

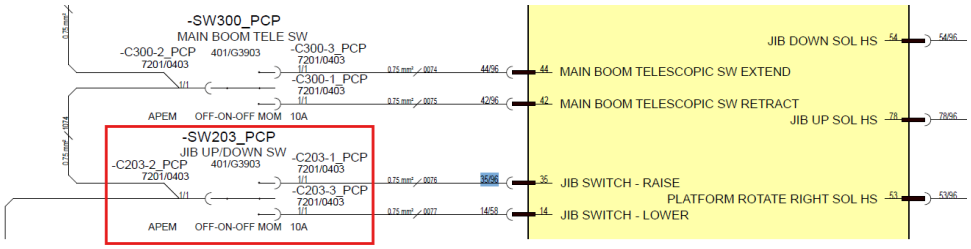

5.1.228 B1263-17

Error code:	B1263-17
ECU	Platform ECU
Description:	Jib - Jib Switch Lower Short Circuit to High.
Component:	Jib Switch
Vehicle reaction:	Before operation: Ignore the input (but not output as it can be operated from where there is no fault) After operation: Refer to 10V System Short Circuit Fault reaction
Possible Cause:	1. A short circuit within the wiring harness 2. A short circuit within the harness connectors 3. Water damage/ingress within the harness connectors 4. Damaged component
Service Action:	1. Disconnect connector -C203-3_PCP from the rear of the Jib Switch on the Platform Control Panel. Measure voltage at terminal. If voltage is high >12V, check wire #0077 to Platform Bosch ECU pin 14/58. 2. Check condition of pins in Platform Bosch ECU. Check for Bent pins, debris or stray wires causing a short. 3. Check for water ingress in the Platform Bosch ECU Connectors. 4. Check Switch for damage or any loose wiring in the control panel.

© 2025 Enter your company name



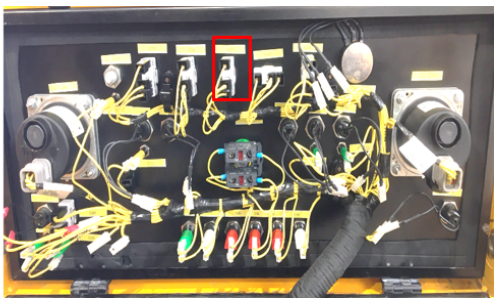

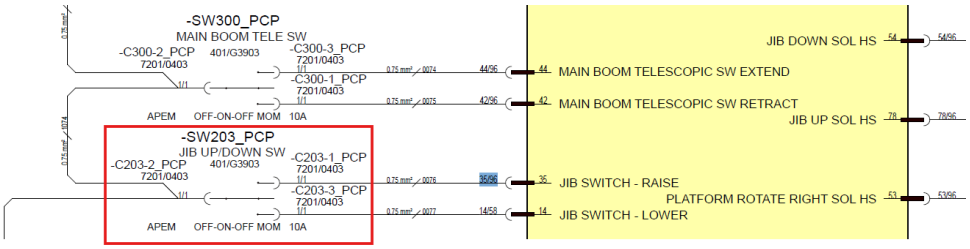

5.1.229 B1264-92

Error code:	B1264-92
ECU	Platform ECU
Description:	Jib - Jib Switch Raise & Lower both Activated (5 - 10v).
Component:	Jib Switch
Vehicle reaction:	Ignore the input (but not output as it can be operated from where there is no fault)
Possible Cause:	1. A short circuit within the wiring harness 2. A short circuit within the harness connectors 3. Water damage/ingress within the harness connectors 4. Damaged component
Service Action:	1. Disconnect connector -C203-1_PCP and -C203-3_PCP from the rear of the Jib Switch on the Platform Control Panel. Measure voltage at both terminals. If voltage is high >12V, check wires #0076 & #0077 to Platform Bosch ECU pin 35/96 & pin 14/58. 2. Check condition of pins in Platform Bosch ECU. Check for Bent pins, debris or stray wires causing a short. 3. Check for water ingress in the Platform Bosch ECU Connectors. 4. Check Switch for damage or any loose wiring in the control panel.

© 2025 Enter your company name



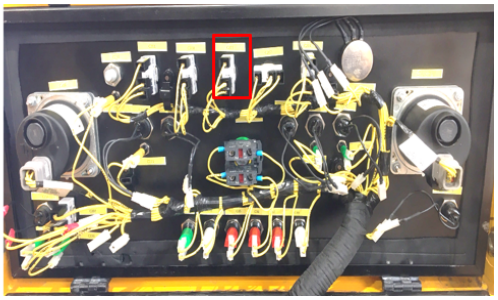

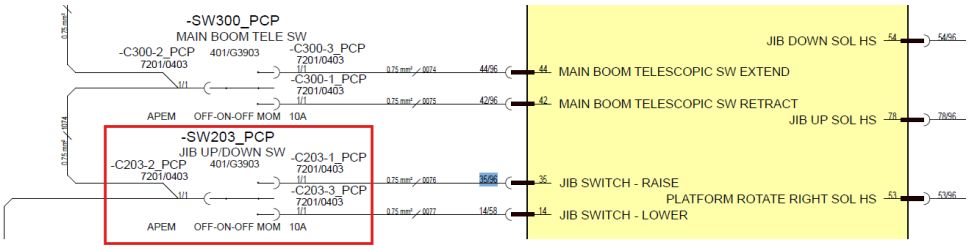

5.1.230 B1265-16

Error code:	B1265-16
ECU	Platform ECU
Description:	Jib - Jib Switch Raise Short Circuit to Lower.
Component:	Jib Switch
Vehicle reaction:	Before operation: Ignore the input (but not output as it can be operated from where there is no fault) After operation: Refer to 10V System Short Circuit Fault reaction
Possible Cause:	1. A short circuit within the wiring harness 2. A short circuit to the chassis 3. A short circuit within the harness connectors 4. Water damage/ingress within the harness connectors 5. Damaged component
Service Action:	1. Disconnect connector -C203-1_PCP from the rear of the Jib Switch on the Platform Control Panel. Measure resistance from Terminal to GND. If a short exists, check wire #0076 to Platform Bosch ECU pin 35/96. 2. Check Wire #0076 is not shorted to GND / Chassis. Check for abrasions and pinching. 3. Check condition of pins in Platform Bosch ECU. Check for Bent pins, debris or stray wires causing a short.

© 2025 Enter your company name

	4. Check for water ingress in the Platform Bosch ECU Connectors. 5. Check Switch for damage or shorting to connector -C203-1_PCP 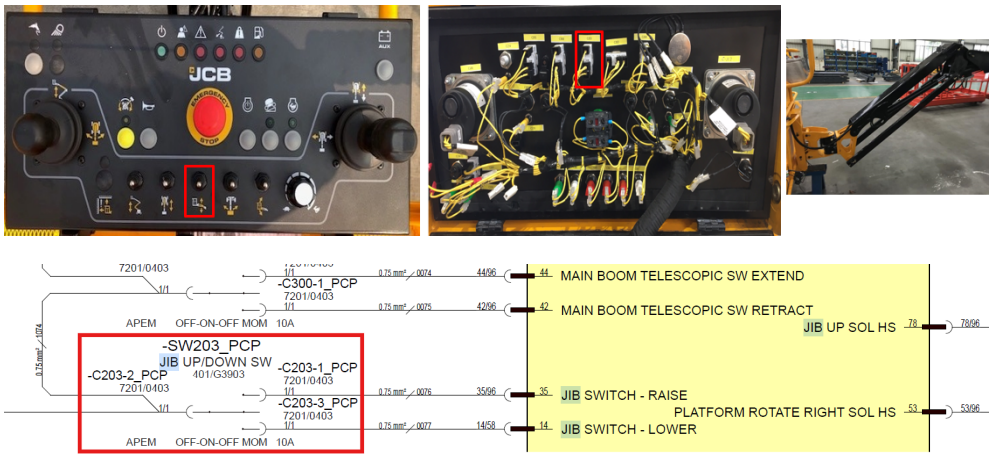

5.1.231 B1266-16

Error code:	B1266-16
ECU	Platform ECU
Description:	Jib - Jib Switch Lower Short Circuit to Lower.
Component:	Jib Switch
Vehicle reaction:	Before operation: Ignore the input (but not output as it can be operated from where there is no fault) After operation: Refer to 10V System Short Circuit Fault reaction
Possible Cause:	1. A short circuit within the wiring harness 2. A short circuit to the chassis 3. A short circuit within the harness connectors 4. Water damage/ingress within the harness connectors 5. Damaged component
Service Action:	1. Disconnect connector -C203-3_PCP from the rear of the Jib Switch on the Platform Control Panel. Measure resistance from Terminal to GND. If a short exists, check wire #0077 to Platform Bosch ECU pin 14/58. 2. Check Wire #0077 is not shorted to GND / Chassis. Check for abrasions and pinching. 3. Check condition of pins in Platform Bosch ECU. Check for Bent pins, debris or stray wires causing a short.

© 2025 Enter your company name

	4. Check for water ingress in the Platform Bosch ECU Connectors. 5. Check Switch for damage or shorting to connector -C203-3_PCP 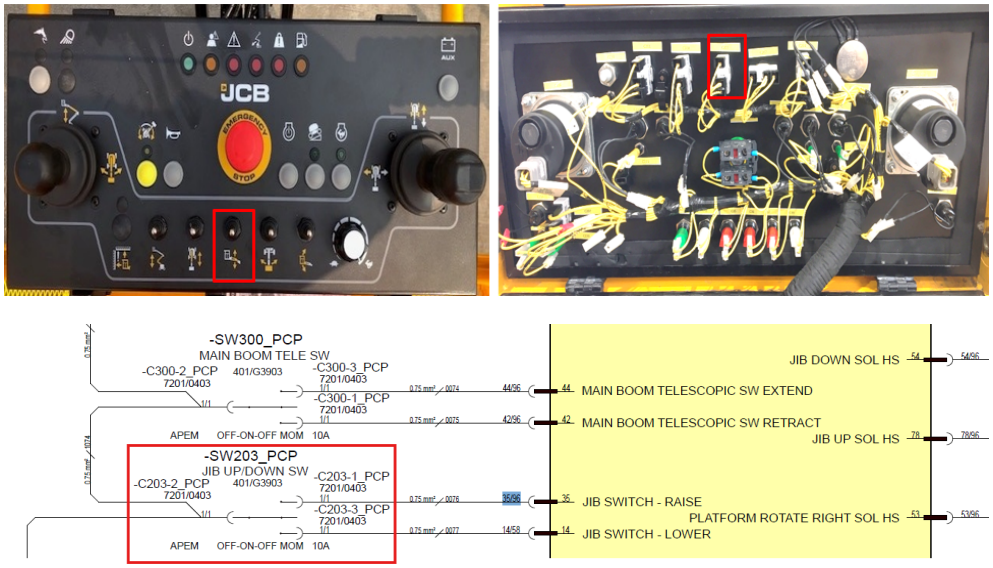

5.1.232 B1267-17

Error code:	B1267-17
ECU	Platform ECU
Description:	10V FEED System Short Circuit to High - Platform
Component:	Platform ECU
Vehicle reaction:	Block all inputs connected to 10V present on the respective control panel.
Possible Cause:	1. A short circuit within the wiring harness 2. A short circuit within the harness connectors 3. Water damage/ingress within the harness connectors 4. Damaged component
Service Action:	1. At platform control panel, measure voltage at DIN rail terminal -S11-4_PCP (Contains wires: #1068, #1070 #1076, #1078, #1085, #1086). Voltage should be +10VDC. If voltage is >+10VDC then there is likely a short circuit to High. To narrow down fault location, remove each wire one at a time and re-measure voltage until the problem circuit has been identified. Wire #1068 is the +10V Feed from the Platform ECU - If this circuit is >+10V, then the fault my be within the Platform Bosch ECU connector. Check Pin 32/58 and

© 2025 Enter your company name

	surrounding pins for shorts, bent pins, debris or water ingress. 2. Check the wiring harness for any abrasions, pinching or any other sign of damage that may lead to a short circuit. 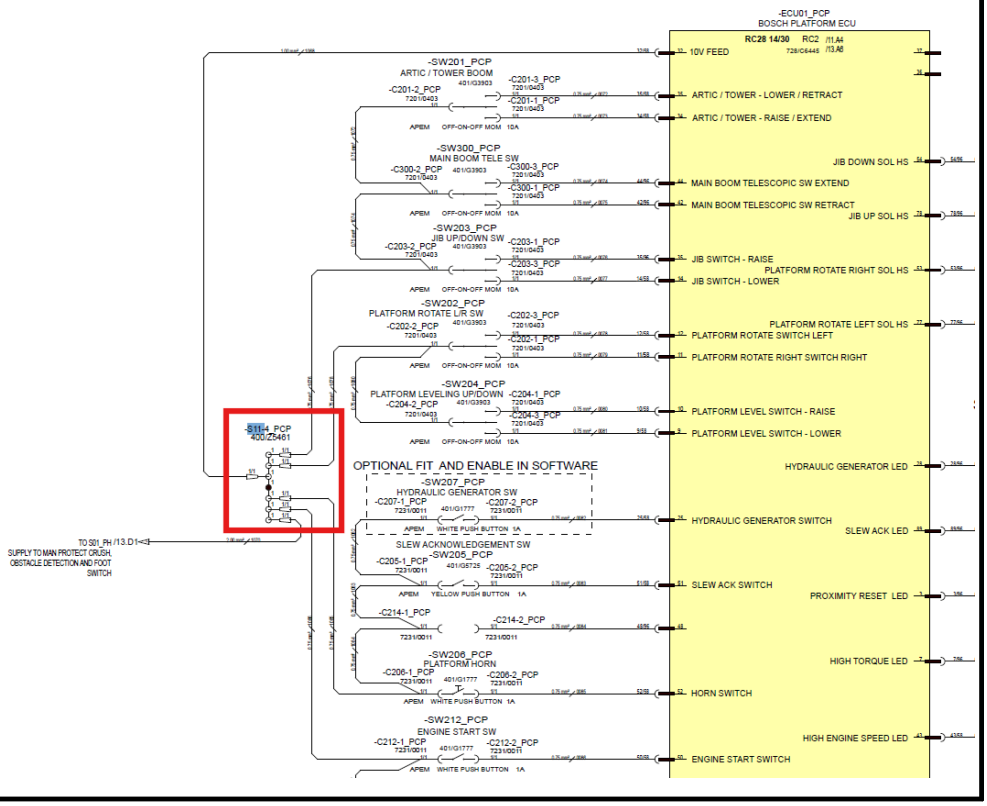

5.1.233 B1268-16

Error code:	B1268-16
ECU	Platform ECU
Description:	Platform 10v Feed - Platform 10v Feed Short Circuit to Low.
Component:	Platform ECU
Vehicle reaction:	Block all inputs connected to 10V present on the respective control panel.
Possible Cause:	1. A short circuit within the wiring harness 2. A short circuit to the chassis 3. A short circuit within the harness connectors 4. Water damage/ingress within the harness connectors 5. Damaged component

© 2025 Enter your company name

Service Action:	1. At platform control panel, measure voltage at DIN rail terminal -S11-4_PCP (Contains wires: #1068, #1070 #1076, #1078, #1085, #1086). Voltage should be +10VDC. If voltage is less than +10VDC then there is likely a short circuit to GND / Chassis. To narrow down fault location, remove each wire one at a time and re-measure voltage until the problem circuit has been identified. Wire #1068 is the +10V Feed from the Platform ECU - If this circuit is less than +10V, then the fault my be within the Platform Bosch ECU connector. Check Pin 32/58 and surrounding pins for shorts, bent pins, debris or water ingress. 2. Check the wiring harness for any abrasions, pinching or any other sign of damage that may lead to a short circuit to other wires or chassis. 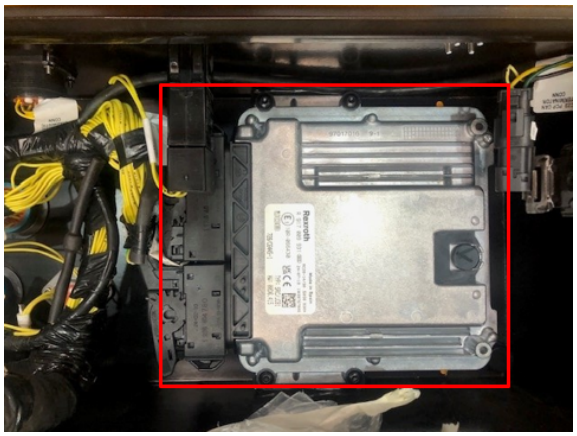

© 2025 Enter your company name

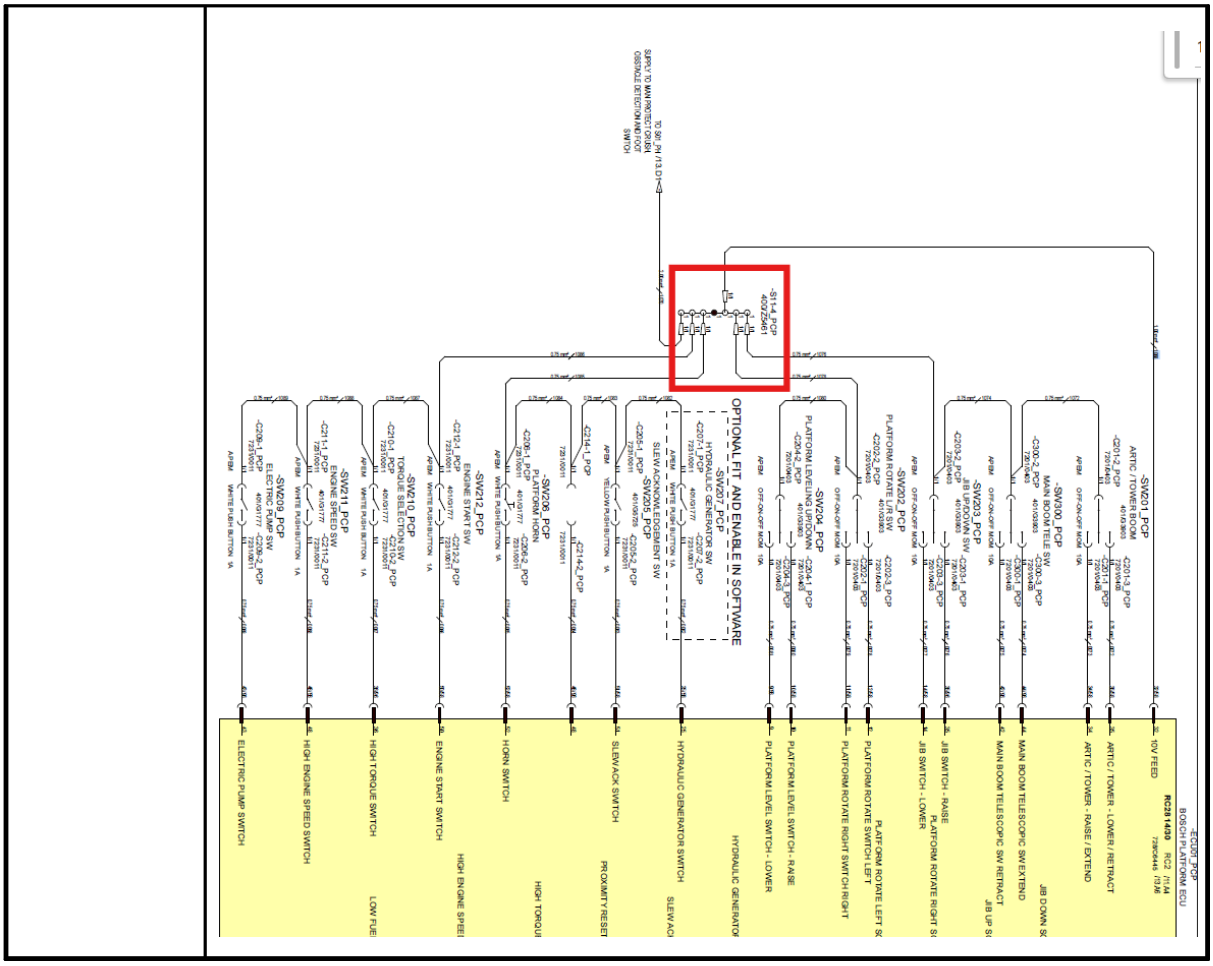

5.1.234 B1269-16

Error code:	B1269-16
ECU	Platform ECU
Description:	Buzzer - Buzzer Short Circuit to Low.
Component:	Buzzer
Vehicle reaction:	Detect failure mode. Disable output
Possible Cause:	1. A short circuit within the wiring harness 2. A short circuit to the chassis 3. A short circuit within the harness connectors 4. Water damage/ingress within the harness connectors 5. Damaged component

© 2025 Enter your company name

Service Action:	1. In platform Control Panel, Check wire #4076 to Buzzer base -RB01_PCP Pin 1. 2. Check for short circuit to GND / Chassis. 3. Check terminals of Buzzer base for any damage, debris, water ingress etc 4. Check buzzer has not malfunctioned, test with new buzzer. 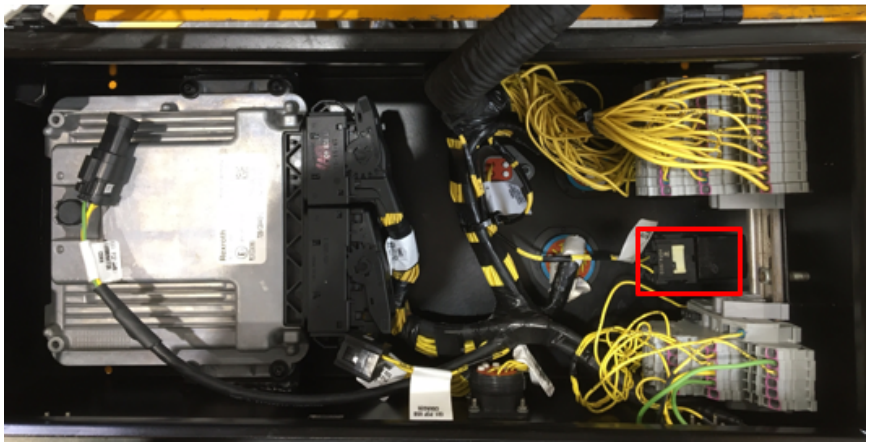 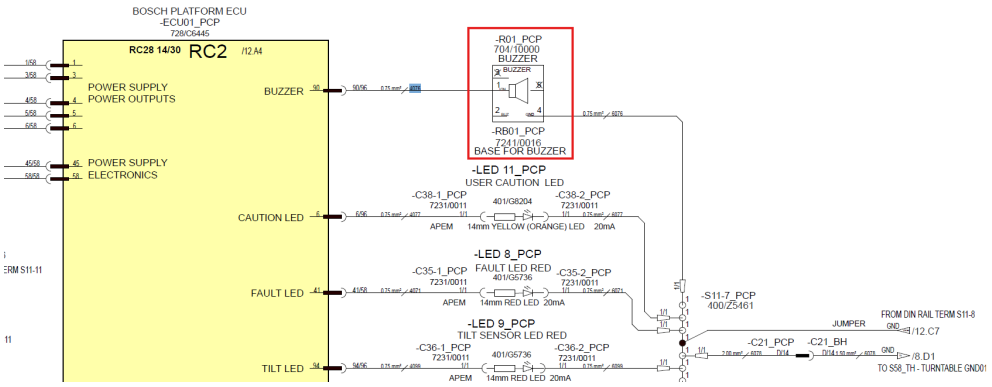

5.1.235 B1270-17

Error code:	**B1270-17**
ECU	Platform ECU
Description:	Buzzer - Buzzer Short Circuit to High.
Component:	Buzzer
Vehicle reaction:	Detect failure mode. Disable output

© 2025 Enter your company name

Possible Cause:	1. A short circuit within the wiring harness 2. A short circuit within the harness connectors 3. Water damage/ingress within the harness connectors 4. Damaged component
Service Action:	1. In platform Control Panel, Check wire #4076 to Buzzer base -RB01_PCP Pin 1. 2. Check for short circuit to High. 3. Check terminals of Buzzer base for any damage, debris, water ingress etc 4. Check buzzer has not malfunctioned, test with new buzzer. 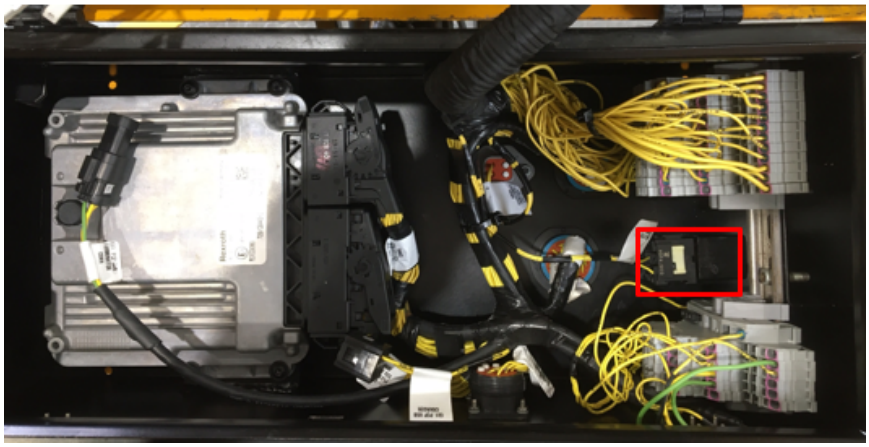 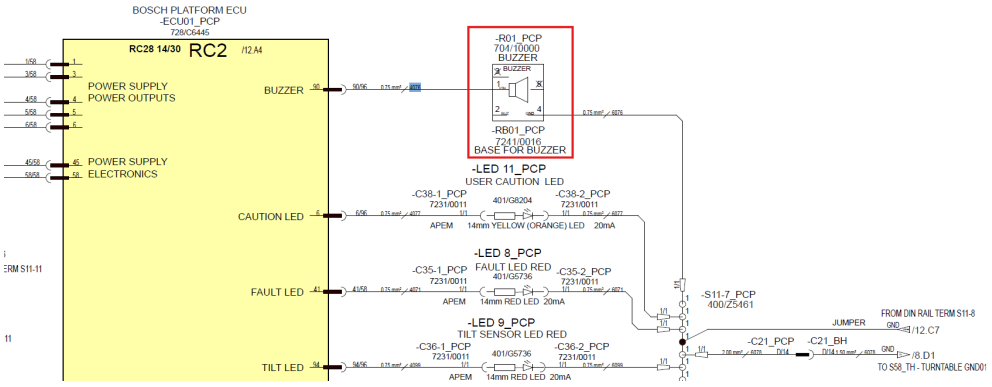

5.1.236 **B1273-17**

Error code:	**B1273-17**
ECU	Platform ECU
Description:	Horn - Platform Horn Button Short Circuit to High.
Component:	Horn Button

© 2025 Enter your company name

Vehicle reaction:	Detect failure mode; Ignore input
Possible Cause:	1. A short circuit within the wiring harness 2. A short circuit within the harness connectors 3. Water damage/ingress within the harness connectors 4. Damaged component
Service Action:	1. Check wiring between 'C26-XC2_PCP Pin 52/58 on the Bosch Platform ECU Connector' and 'C206-2_PCP on the Platform Horn Button'. 2. Disconnect 'C26-XC2_PCP Bosch Platform ECU Connector' and check terminal 52/58 ensuring that nothing is touching it. Same with 'C206-2_PCP on the Platform Horn Button'. 3. Check connectors are dry and free of debris. Check for damaged terminals on the 'C26-XC2_PCP Bosch Platform ECU Connector'. 4. Check operation of the Platform Horn Button. Check for physical damage to the Horn Button, connectors and other harness components.  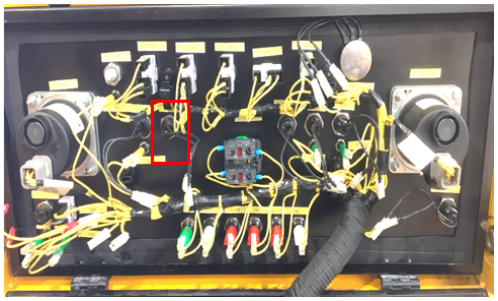 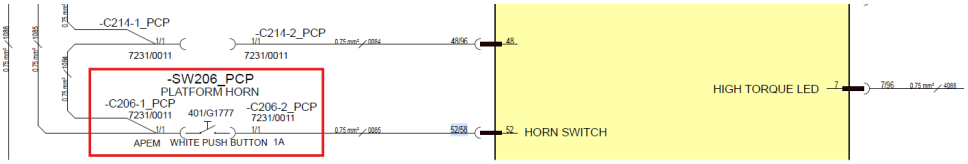

5.1.237 **B1274-16**

Error code:	**B1274-16**
ECU	Platform ECU
Description:	Horn - Platform Horn Button Short Circuit to Low.
Component:	Horn Button

© 2025 Enter your company name

Vehicle reaction:	Detect failure mode; Ignore input
Possible Cause:	1. A short circuit within the wiring harness 2. A short circuit to the chassis 3. A short circuit within the harness connectors 4. Water damage/ingress within the harness connectors 5. Damaged component
Service Action:	1. Check wiring between 'C26-XC2_PCP Pin 52/58 on the Bosch Platform ECU Connector' and 'C206-2_PCP on the Platform Horn Button'. 2. Check the wiring has not shorted to the chassis of the machine (caused perhaps by pinching or abrasion). 3. Disconnect 'C26-XC2_PCP Bosch Platform ECU Connector' and check terminal 52/58 ensuring that nothing is touching it. Same with 'C206-2_PCP on the Platform Horn Button'. 4. Check connectors are dry and free of debris. Check for damaged terminals on the 'C26-XC2_PCP Bosch Platform ECU Connector'. 5. Check operation of the Platform Horn Button. Check for physical damage to the Horn Button, connectors and other harness components.  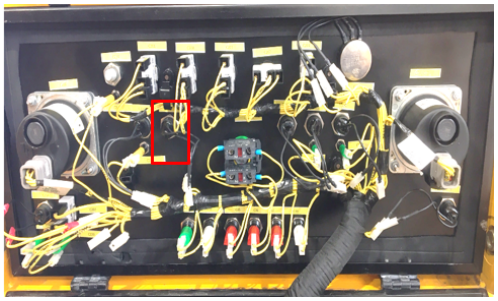 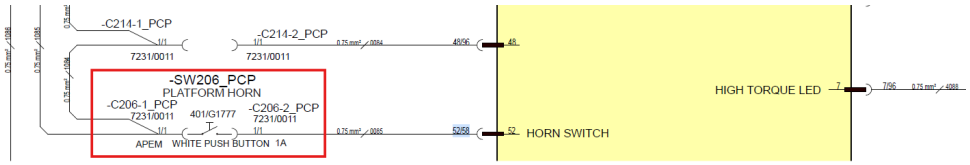

5.1.238 **B1275-24**

Error code:	**B1275-24**
ECU	Platform ECU
Description:	Horn - Platform Horn Button Stuck >10s.

© 2025 Enter your company name

Component :	Horn Button
Vehicle reaction:	Detect failure mode; Ignore input
Possible Cause:	1. A short circuit within the wiring harness 2. A short circuit within the harness connectors 3. Water damage/ingress within the harness connectors 4. Damaged component
Service Action:	1. Check wiring between 'C26-XC2_PCP Pin 52/58 on the Bosch Platform ECU Connector' and 'C206-2_PCP on the Platform Horn Button'. 2. Disconnect 'C26-XC2_PCP Bosch Platform ECU Connector' and check terminal 52/58 ensuring that nothing is touching it. Same with 'C206-2_PCP on the Platform Horn Button'. 3. Check connectors are dry and free of debris. Check for damaged terminals on the 'C26-XC2_PCP Bosch Platform ECU Connector'. 4. Check operation of the Platform Horn Button. Check for physical damage to the Horn Button, connectors and other harness components.  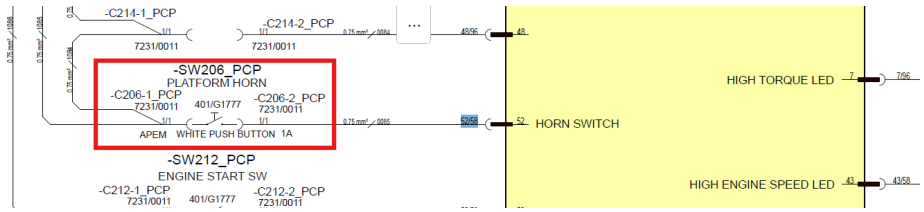

5.1.239 **B1276-24**

Error code:	**B1276-24**
ECU	Base ECU
Description :	Base Start lock Stuck (VBATT <8.5VDC)
Component :	ECU

© 2025 Enter your company name

Vehicle reaction:	Base ECU Software execution terminated. ECU does not run. Machine disabled.
Possible Cause:	1. A open circuit within the harness connectors 2. Water damage/ingress within the harness connectors 3. Damaged component
Service Action:	1. Check voltage at Base ECU pins 1/58, 3/58, 4/58, 5/58 and 6/58. Voltage can be measured at ECU feed fuse FU03_TCP. 2. Check continuity of GND pin 2/58 to Turntable Ground and Check Battery Voltage. 3. Check connectors for water ingress, bent or backed out pins, debris or any damage to the wiring harness. 4. If no fault found, replace ECU 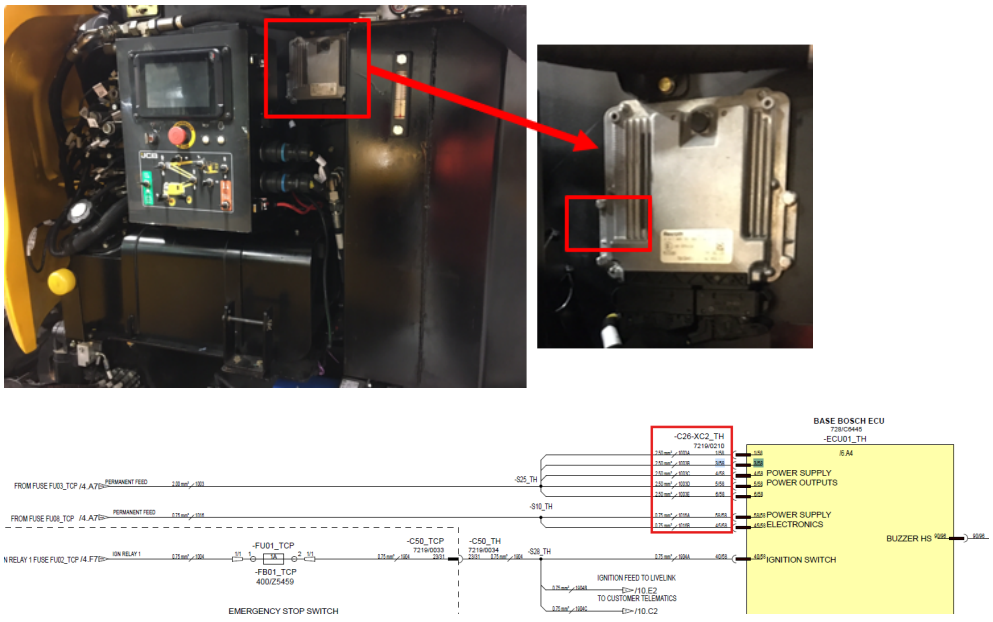

5.1.240 B1277-24

Error code:	**B1277-24**
ECU	Platform ECU
Description:	Platform Startlock Stuck (Generic o/p fault)
Component:	ECU

© 2025 Enter your company name

Vehicle reaction:	Base ECU Software execution terminated. ECU does not run. Machine disabled.
Possible Cause:	1. A open circuit within the harness connectors 2. Water damage/ingress within the harness connectors 3. Damaged component
Service Action:	1. Check voltage at Platform ECU pins 1/58, 3/58, 4/58, 5/58 and 6/58. Voltage can be measured at DIN Rail Terminal -S11-1_PCP. Check all wires are fully inserted. 2. Check interconnect -C21_BH / -C21_PCP. Ensure wires not damaged, pins not backed out or no water ingress. 3. Check interconnect -C37_TH / -C37_BH. Ensure wires not damaged, pins not backed out or no water ingress. 4. Check interconnect -C39_TCP / -C39_TH. Ensure wires not damaged, pins not backed out or no water ingress. 5. Check voltage at fuse -FU06_TCP 6. Check Relay output of IGN RELAY 3 (Wire #0013) to DIN Rail terminal -S11-3_TCP 7. Check voltage at DIN Rail Terminal -S11-19_TCP (Wire #2013) 8. Check continuity of GND pin 2/58 to Turntable Ground. 9. Check connectors for water ingress, bent or backed out pins, debris or any damage to the wiring harness. 10. If no fault found, replace ECU 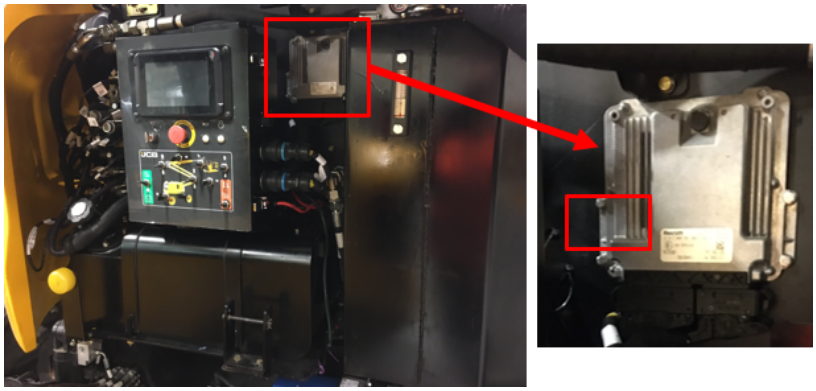

© 2025 Enter your company name

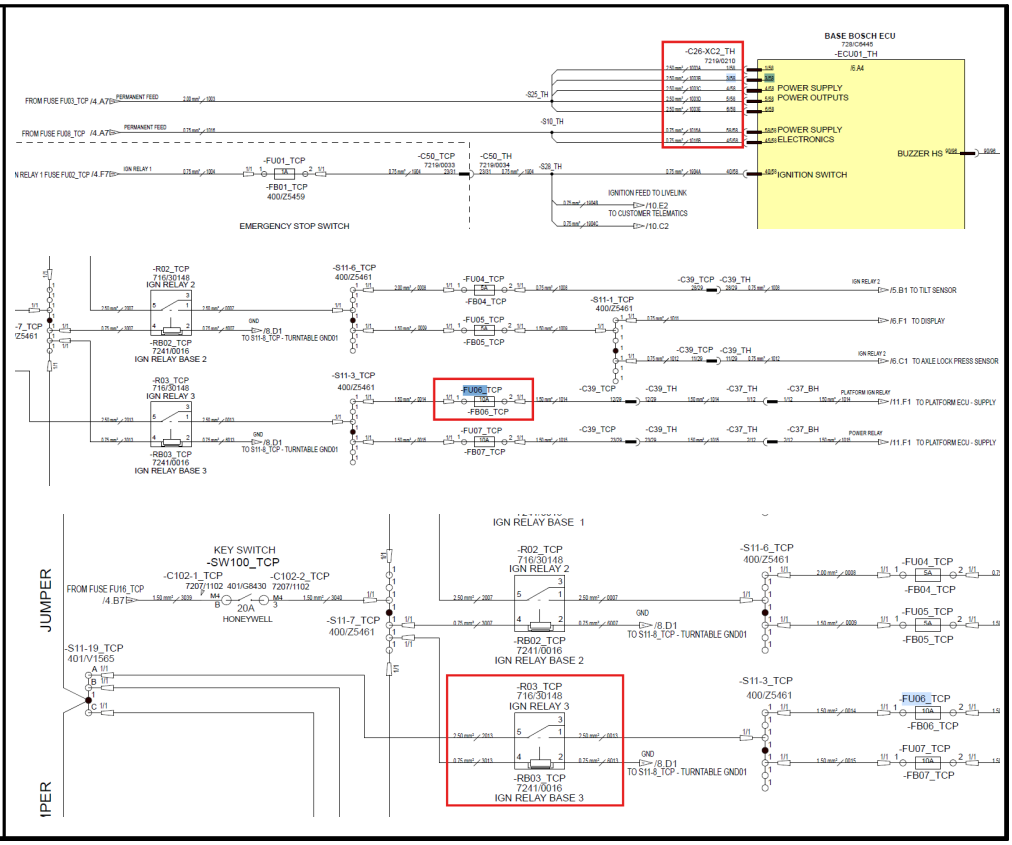

5.1.241 B1278-17

Error code:	B1278-17
ECU	Base ECU
Description:	REAR BRAKE Solenoid Valve Short Circuit to High or Open Circuit
Component:	Rear Brakes Solenoid
Vehicle reaction:	Detect failure modes. Don't disable any Disable output and don't ignore any input
Possible Cause:	1. A short or open circuit within the wiring harness 2. A short or open circuit within the harness connectors 3. Water damage/ingress within the harness connectors 4. Damaged component
Service Action:	1. Fault indicates short to high or open circuit to Rear Brake Solenoid. Check voltage at solenoid connector -C03_CH pin 1/2. 2. Check continuity of GND path from Solenoid connector -C03_CH pin 2/2 to

© 2025 Enter your company name

	Turntable GND. 3. Check Interconnect -C22_TH / -C22_TH pin 3/12. Check bent / backed out pins, debris, shorts or water ingress. 4. Check Base Bosch ECU terminal 28/96. Check Connector for bent / backed out pins, debris, shorts or water ingress. 5. Check wire #4039 for continuity from Base Bosch ECU pin 38/96 to Rear Brake Solenoid connector -C03_CH pin 1/2. 6. Check the harness for any abrasions, pinching or any other damage that may lead to a fault.

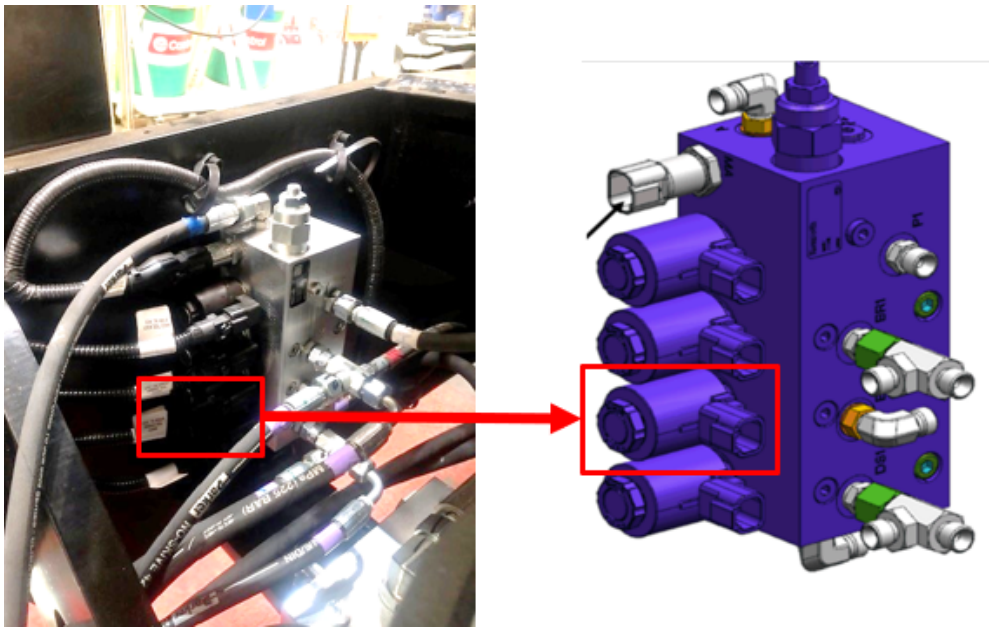

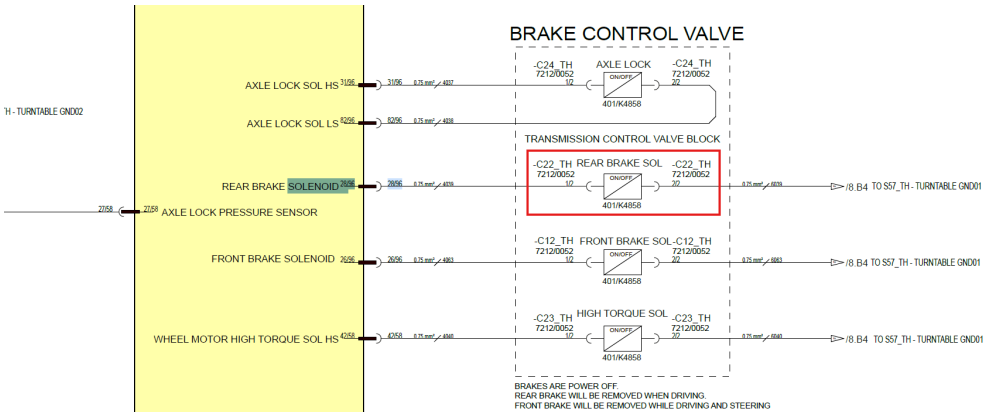

5.1.242 B1279-16

Error code:	B1279-16
ECU	Base ECU

© 2025 Enter your company name

Description :	REAR BRAKE Solenoid Valve Short Circuit to Low
Component :	Rear Brakes Solenoid
Vehicle reaction:	Detect failure modes. Don't disable any Disable output and don't ignore any input
Possible Cause:	1. A short circuit within the wiring harness 2. A short circuit to the chassis 3. A short circuit within the harness connectors 4. Water damage/ingress within the harness connectors 5. Damaged component
Service Action:	1. Fault indicates short to GND to Rear Brake Solenoid. Check voltage at solenoid connector -C03_CH pin 1/2. Check no short to GND at same pin. 2. Check continuity of GND path from Solenoid connector -C03_CH pin 2/2 to Turntable GND. 3. Check Interconnect -C22_TH / -C22_TH pin 3/12. Check bent / backed out pins, debris, shorts or water ingress. 4. Check Base Bosch ECU terminal 28/96. Check Connector for bent / backed out pins, debris, shorts or water ingress. 5. Check wire #4039 for continuity from Base Bosch ECU pin 38/96 to Rear Brake Solenoid connector -C03_CH pin 1/2. 6. Check the harness for any abrasions, pinching or any other damage that may lead to a fault. 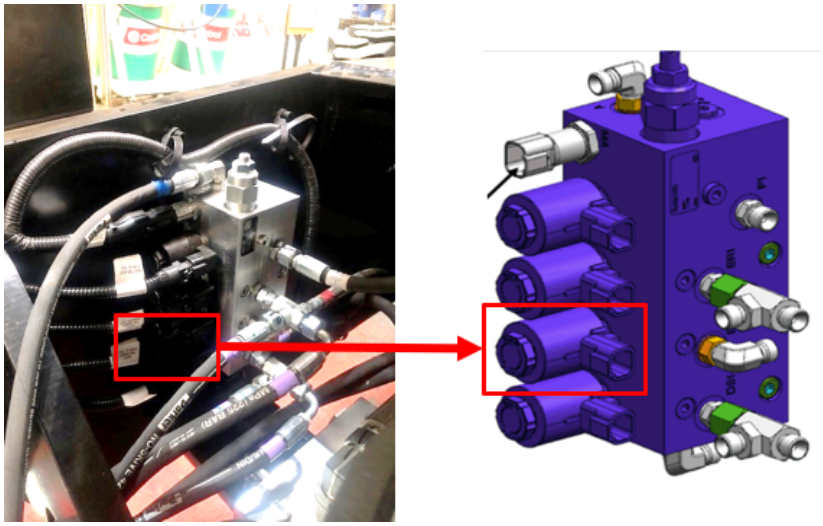

© 2025 Enter your company name

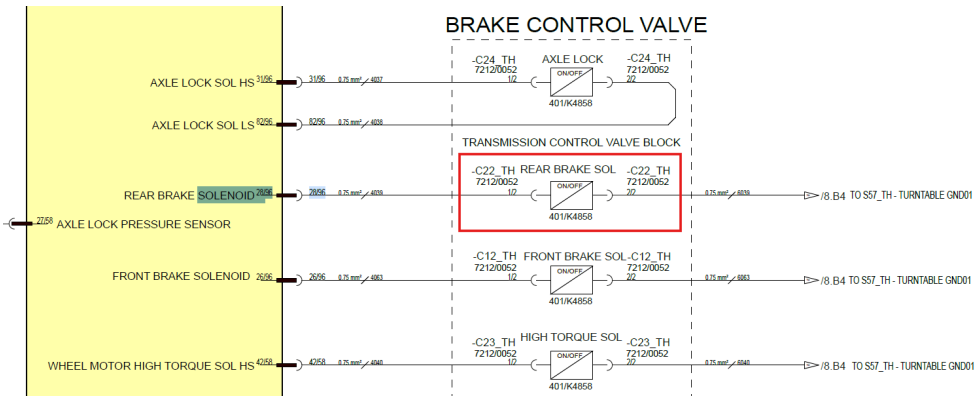

5.1.243 B1281-16

Error code:	B1281-16
ECU	Base ECU
Description:	VSS2 Low Voltage (<= 9.5V)
Component:	ECU
Vehicle reaction:	Detect failure mode; Disable all Disable output and ignore input
Possible Cause:	1. Short Circuit 2. Excessive load 3. Water Ingress
Service Action:	1. VSS 2 (+10V) Voltage at Pin 32/58 on the Base Bosch ECU is equal to or below +9.5V. There is no circuitry attached to this pin. Check Connector for bent pins, debris, water ingress or any other reason a short to ground may exist. If fault remains, change the ECU. 2. Check System voltage

© 2025 Enter your company name

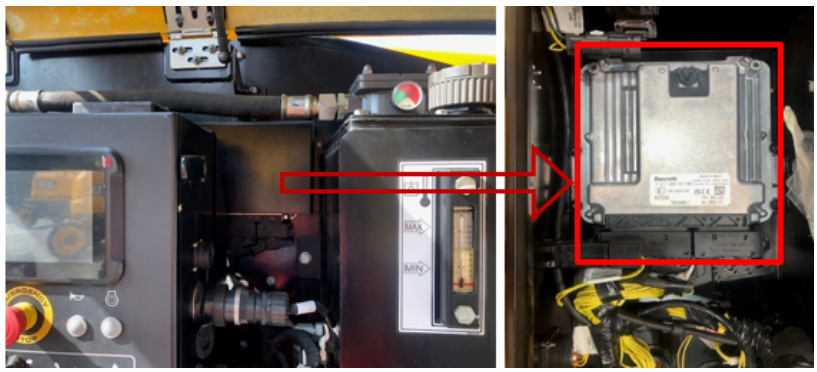

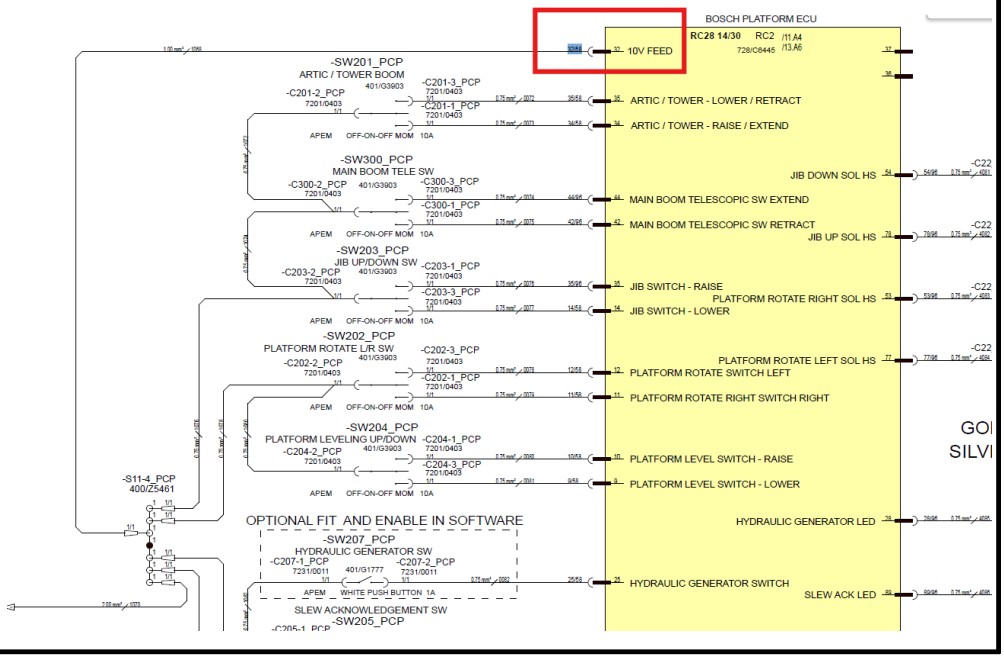

.

5.1.244 B1283-16

Error code:	B1283-16
ECU	Platform ECU
Description:	VSS1 Low Voltage (<= 4.5V)
Component:	ECU
Vehicle reaction:	Detect failure mode; Disable all Disable output and ignore input of Platform Panel

© 2025 Enter your company name

Possible Cause:	1. Short Circuit 2. Excessive load 3. Water Ingress
Service Action:	1. VSS 1 (+5 V) Voltage at Pin 19/58 on the Platform Bosch ECU is equal to or below +4.5V. This voltage can be measured at the speed potentiometer terminal -C-L11-3_PCP. Check no short or damage at potentiometer. Check Connector for bent pins, debris, water ingress or any other reason a short to ground may exist. If fault remains, change the ECU. 2. Check System voltage.  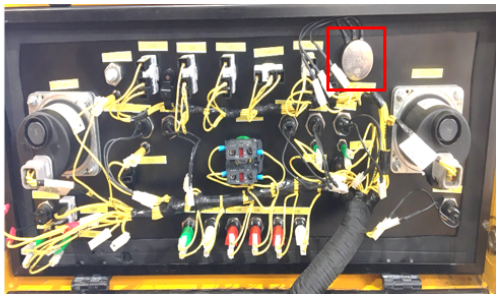 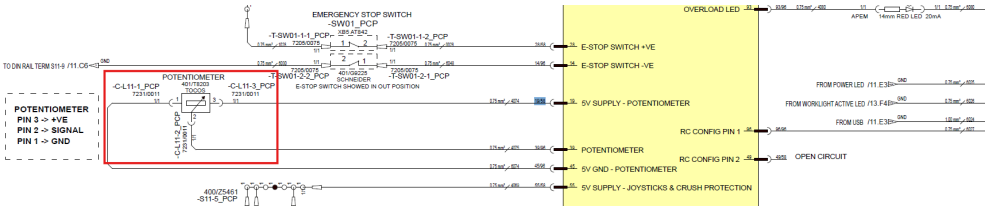

5.1.245 B1284-16

Error code:	**B1284-16**
ECU	Platform ECU
Description:	VSS2 Low Voltage (<= 9.5V)
Component:	ECU
Vehicle reaction:	Detect failure mode; Disable all Disable output and ignore input of Platform Panel
Possible Cause:	1. Short Circuit 2. Excessive load 3. Water Ingress

© 2025 Enter your company name

Service Action:	1. VSS 2 (+10V) Voltage at Pin 32/58 on the Platform Bosch ECU is equal to or below +9.5V. Voltage can be measured at DIN Rail Terminal -S11-4_PCP. Check other wires coming from this DIN Rail Terminal (#1070, #1076, #1078, #1085, #1086) Try removing these wires one at a time to narrow down fault location.If no fault found, check platform ECU Connector for bent pins, debris, water ingress or any other reason a short to ground may exist. If fault remains, change the ECU.

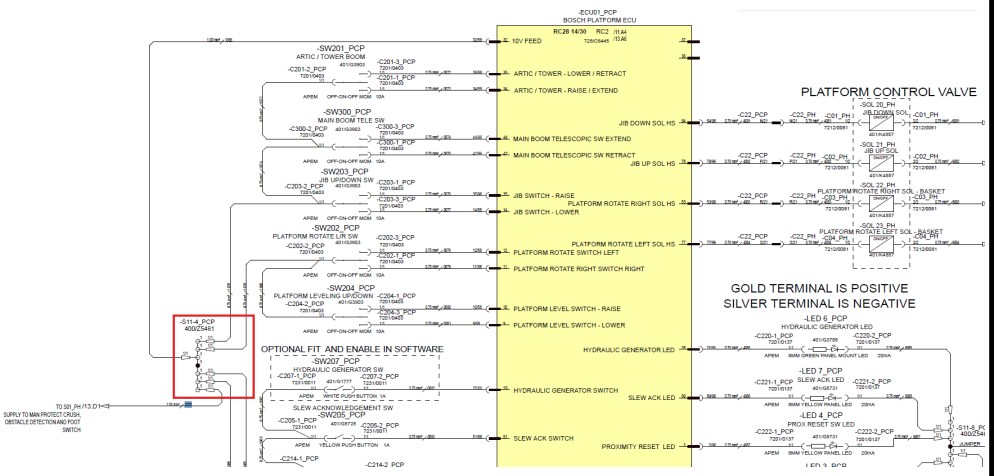

5.1.246 **B1285-16**

Error code:	**B1285-16**
ECU	Platform ECU
Description:	VSS3 Low Voltage (<= 4.5V)
Component:	ECU
Vehicle reaction:	Detect failure mode; Disable all Disable output and ignore input of Platform Panel
Possible Cause:	1. Short Circuit 2. Excessive load 3. Water Ingress
Service Action:	1. VSS 3 (+5 V) Voltage at Pin 55/58 on the Platform Bosch ECU is equal to or below +4.5V. This voltage provides supply to Joysticks and Crush Protection. The voltage can be measured at DIN Rail Terminal -S11-5_PCP

© 2025 Enter your company name

	(Wire #4069). Check all wires at DIN Rail Terminal (#4067, #4068, #4070). Remove one wire at a time and measure voltage from ECU to see if it raises back to +5V. If no fault found, check platform ECU Connector for bent pins, debris, water ingress or any other reason a short to ground may exist. If fault remains, change the ECU. 2. Check System voltage. 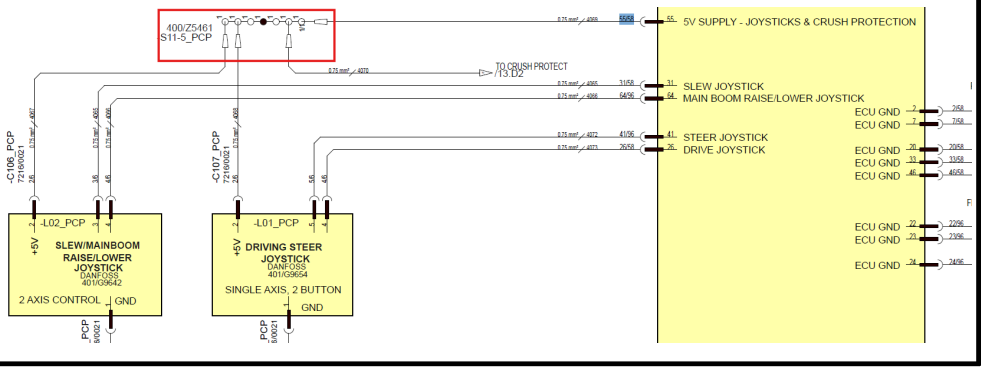

5.1.247 B1287-2F

Error code:	B1287-2F
ECU	Base ECU
Description:	Fuel Sender - Fuel Sender Data Erratic.
Component:	Fuel Sender
Vehicle reaction:	Detect failure mode; Don’t send any value to Display
Possible Cause:	1. Short Circuit 2. Open Circuit 3. Poor Connection 4. Water Ingress 5. Damaged Component
Service Action:	1. Check connections of Fuel Level Sender -C28_TH. Ensure connections are well made, free of contaminant. Check terminals are seated correctly. Disconnect connector from fuel level sender and measure resistance. Resistance should measure between 10 and 178 Ohms (depending on quantity of fuel in tank). Check fuel level sender connector is undamaged. 2. Check continuity of GND from -C28_TH pin 2/2 to Turntable Ground (Wire #6033). 3. Check continuity of Fuel Level Signal from -C28_TH pin 1/2 to Base Bosch ECU pin 21/96 (Wire #4033)

© 2025 Enter your company name

	4. Check condition of Base Bosch ECU connector, check for bent or backed out pins, water ingress, debris or any other fault. 5. Check condition of wiring harness between fuel level sender and ECU 6. Replace fuel level sender. 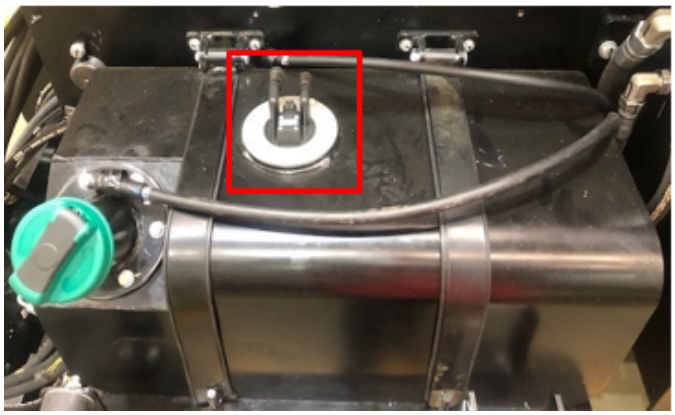 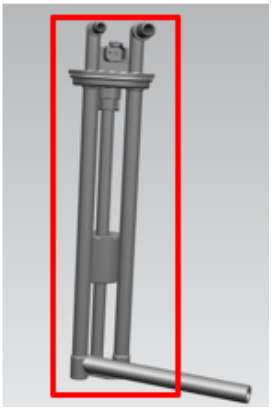 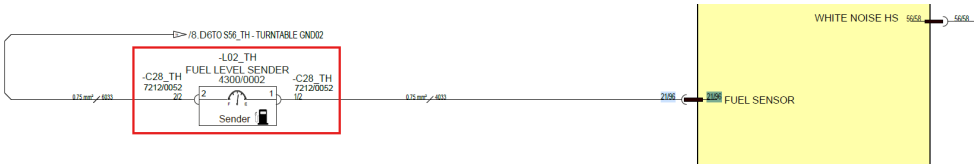

5.1.248 B1288-2F

Error code:	B1288-2F
ECU	Base ECU
Description:	OSCILLATING AXLE PRESSURE SENSOR SOFTWARE Failure
Component:	OSCILLATING AXLE PRESSURE SENSOR
Vehicle reaction:	Detect failure mode with Safout method - Switch Axle Lock o/p to off; Base disables Lift – Main Boom and Artic Boom, Extend – Main Boom, Slew and Drive functions (in slew position and Raised mode)
Possible Cause:	1. Short Circuit 2. Open Circuit 3. Poor Connection 4. Water Ingress 5. Damaged Component
Service Action:	1. Check connections to Pressure sensor

© 2025 Enter your company name

	2. Check the voltage at Connector C214_TH 2/4, if no voltage need to investigate as per schemetic 2. Check wiring at Pressure sensor connector 4. Check Base ECU Pin 27/58 for any damage, bent or back out. 5. Check wire 1012, 6012 and 4012 for any cut, short or damage. 6. Replace the Pressure sensor if damage or Faulty. 7. If Sensor is OK, Reflash the software with latest Version. 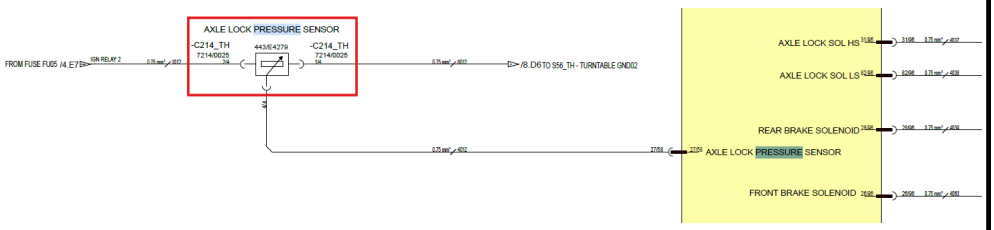

5.1.249 **B1300-2F**

Error code:	**B1300-2F**
ECU	Base ECU
Description :	ALTERNATOR FAULT
Component :	Alternator
Vehicle reaction:	Engine off - Alternator switch On - Alternator icon on constant, fault icon flashes, Fault LED at platform flashes. Both buzzers beep. Engine on - Alternator switch Off - Alternator icon on constant, fault icon flashes, Fault LED at platform flashes. Both buzzers beep.
Possible Cause:	1. Short Circuit 2. Open Circuit 3. Poor Connection 4. Water Ingress 5. Damaged Component

© 2025 Enter your company name

Service Action:

1. Check D+ Relay -R05_TCP.
2. At relay, check pin 5 (Wire #2034). Should be +12VDC
3. At relay, check D+ input on Pin 4 (Wire #1036C). Should be high when engine is running. If not - Check interconnect -C39_TH / -C39_TCP for fault. If Ok, check interconnect -C41_EH / -C41_TH for fault. If Ok, Check continuity from -C41_EH (Wire #4040) to Alternator terminal -T2 (Wire #4033)
4. At D+ Relay -R05_TCP, check ground connection from pin 2 (Wire #6034) to Turntable Ground.
5. At Relay, Check Continuity from Pin 1 (Wire #0034) to -S11-4_TCP. Voltage should also be +12VDC when engine is running.
6. Check Fuse -FU12_TCP (5A)
7. Check Continuity from -S11-4_TCP to Interconnect -C39_TCP pin 19/29. If Ok, Check Continuity from -C39_TH pin 19/29 to Base Bosch ECU Pin 58/96. Check voltage at this pin also, should be +12VDC when engine running.
8. Check Base Bosch Connector for any damage, water ingress, debris etc.
9. Check all harness runs in this circuit for any damage.



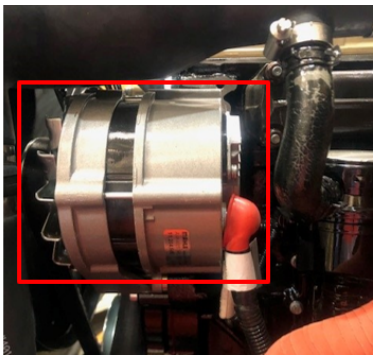

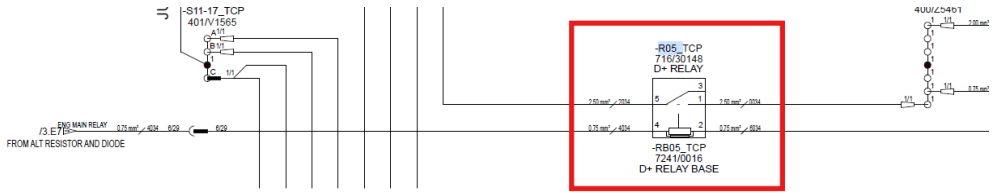

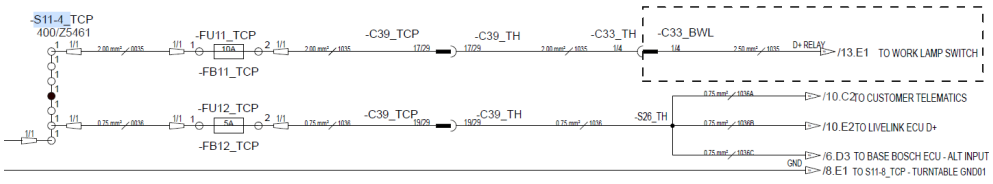

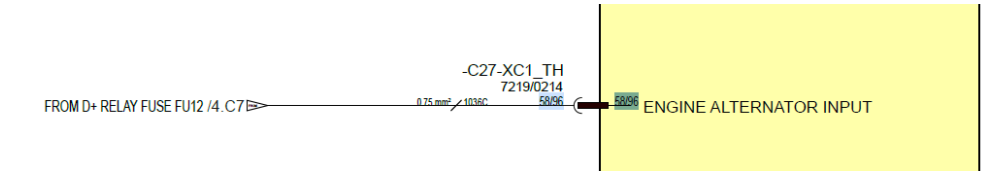

© 2025 Enter your company name

5.1.250 B1301-2F

Error code:	B1301-2F
ECU	Base ECU
Description:	Oscillating Axle - Oscillating Axle Pressure Sensor Failure.
Component:	Oscillating Axle Pressure Sensor
Vehicle reaction:	Detect failure mode; Prevent all Raise, Extend and Slew; In Raised or Slew position - prevent drive & steer; In Stowed and Forward position - allow drive
Possible Cause:	1. A short circuit within the wiring harness 2. A short circuit within the harness connectors 3. Water damage/ingress within the harness connectors 4. Damaged component
Service Action:	1. Output voltage of pressure sensor is 0.5 - 4.5VDC. Disconnect interconnect connectors -C214_TH and -C214_TH. Measure voltage at pin 9/12 (Wire #4012) on both connectors. If one of the measurements is above 4.5VDC then there is a short to high on that connection. Trace the fault back to where there is a short circuit to high. 2. Check interconnects -C214_TH and -C214_TH for any damage, shorts, debris or stray wire. Check the Base Bosch ECU connector (58-way) for any damage, bent pins debris etc. Check pin 27/58. 3. Check all above connectors for any water ingress. 4. Check the pressure sensor for damage or malfunction. Replace component. 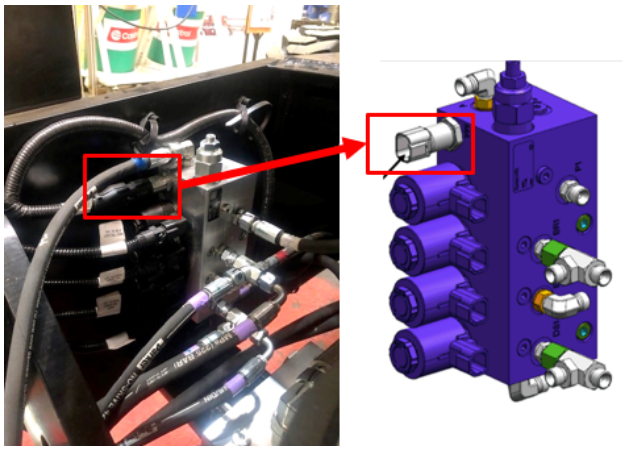

© 2025 Enter your company name

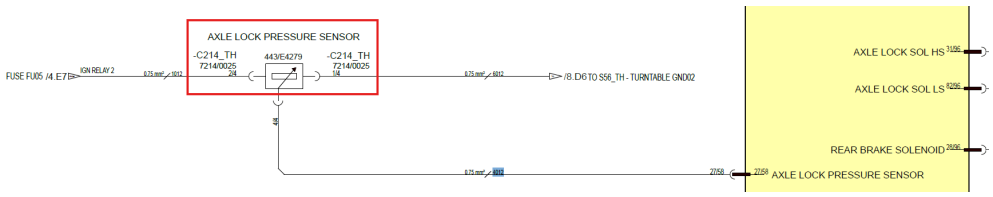

5.1.251 B1302-2F

Error code:	B1302-2F
ECU	Base ECU
Description :	RC CONFIG Short Circuit Plausibility Check
Component :	ECU
Vehicle reaction:	After ignition: Detect failure mode; Disable all functionalities of respective controller; Before ignition: check in start lock logic and control will be stuck in start lock mode; Detect failure mode.
Possible Cause:	1. Short or Open Circuit on CAN Bus network 2. Water ingress on CAN Bus connector / device 3. Harness damage
Service Action:	1. Check CAN Bus terminators at both ends of CAN Network (Platform and Base Control Panels) 2. Remove one CAN Bus terminator and measure resistance of CAN-H to CAN-L. Should be 120 Ohms. If value is low, check CAN Bus for short circuits, If value is High, Check for open circuits (including interconnects) 3. Check for water ingress, short or open circuits in all connectors of devices attached to CAN Bus. 4. Connect Service Master via diagnostic connector, User CAN diagnostics to check which devices are connected and operating correctly.

© 2025 Enter your company name

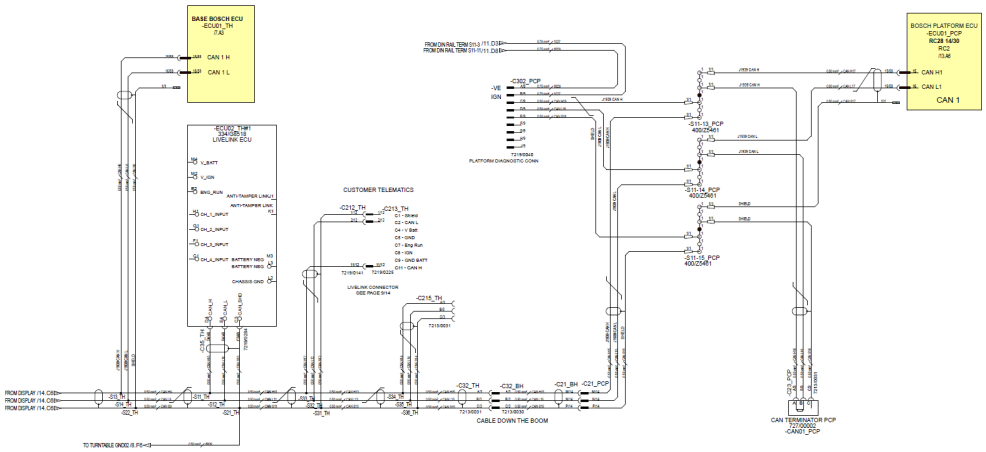

5.1.252 B1303-2F

Error code:	B1303-2F
ECU	Platform ECU
Description:	RC CONFIG Short Circuit Plausibility Check
Component:	ECU
Vehicle reaction:	After ignition: Detect failure mode; Disable all functionality of respective controller; Before ignition: check in startlock logic and control will be stuck in Startlock mode; Detect failure mode.
Possible Cause:	1. Short or Open Circuit on CAN Bus network 2. Water ingress on CAN Bus connector / device 3. Harness damage
Service Action:	1. Check CAN Bus terminators at both ends of CAN Network (Platform and Base Control Panels) 2. Remove one CAN Bus terminator and measure resistance of CAN-H to CAN-L. Should be 120 Ohms. If value is low, check CAN Bus for short circuits, If value is High, Check for open circuits (including interconnects) 3. Check for water ingress, short or open circuits in all connectors of devices attached to CAN Bus. 4. Connect Service Master via diagnostic connector, User CAN diagnostics to check which devices are connected and operating correctly.

© 2025 Enter your company name

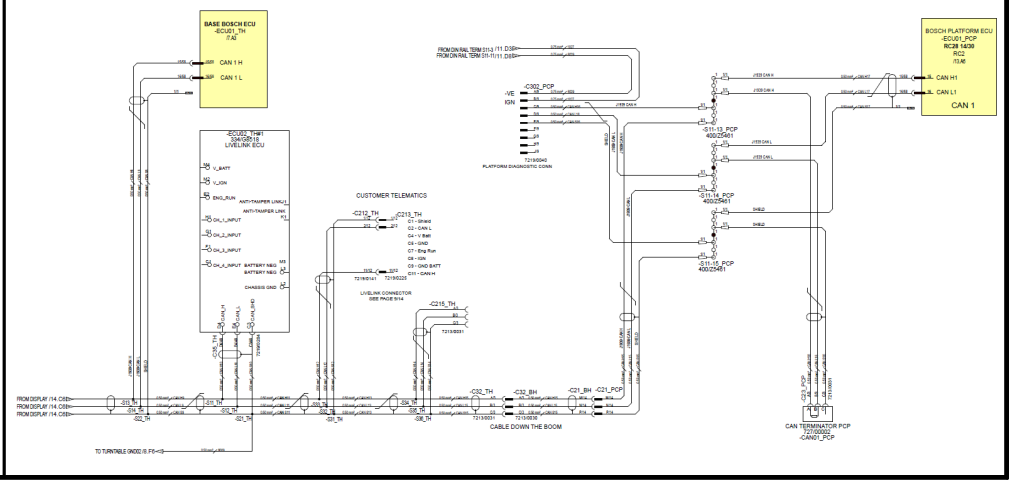

5.1.253 B1304-24

Error code:	B1304-24
ECU	Base ECU
Description:	Base ECU - VSS1 Low Voltage (<= 4.5V)
Component:	ECU
Vehicle reaction:	Tx DM1
Possible Cause:	1. Short Circuit 2. Excessive load 3. Water Ingress
Service Action:	1. VSS 1 (+5 V) Voltage at Pin 19/58 on the Base Bosch ECU is equal to or below +4.5V. There is no circuitry attached to this pin. Check Connector for bent pins, debris, water ingress or any other reason a short to ground may exist. If fault remains, change the ECU. 2. Check System voltage

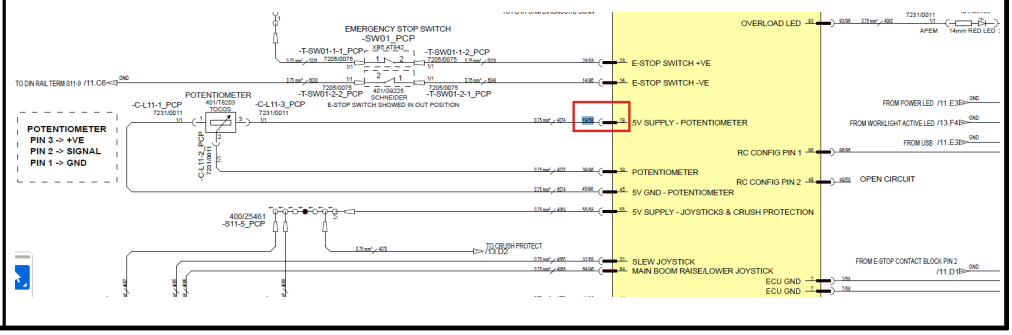

© 2025 Enter your company name

5.1.254 **B1305-24**

Error code:	**B1305-24**
ECU	Base ECU
Description :	Base ECU - VSS2 Low Voltage (<= 9.5V)
Component :	ECU
Vehicle reaction:	Tx DM1
Possible Cause:	1. Short Circuit 2. Excessive load 3. Water Ingress
Service Action:	1. VSS 2 (+10V) Voltage at Pin 32/58 on the Base Bosch ECU is equal to or below +9.5V. There is no circuitry attached to this pin. Check Connector for bent pins, debris, water ingress or any other reason a short to ground may exist. If fault remains, change the ECU. 2. Check System voltage 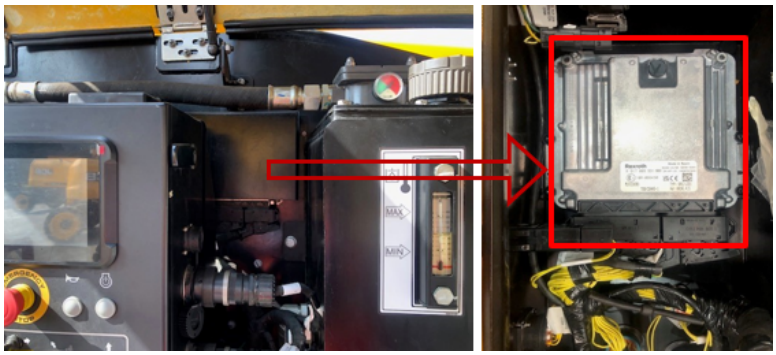 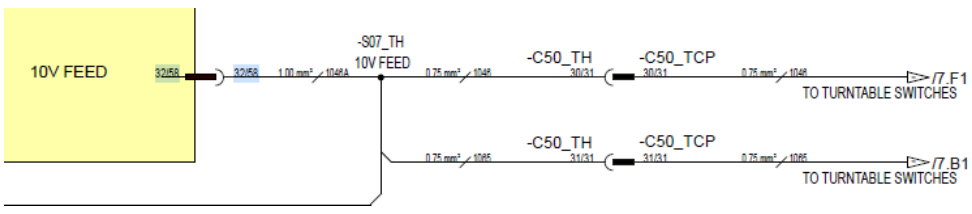

5.1.255 **B1307-24**

Error code:	**B1307-24**

© 2025 Enter your company name

ECU	Base ECU
Description :	Base Startlock Stuck (Generic o/p fault detected 12V supply low)
Component :	ECU
Vehicle reaction:	Base ECU Software execution terminated. ECU does not run. Machine disabled.
Possible Cause:	1. Short Circuit 2. Low system voltage 3. Faulty ECU
Service Action:	1) Test system voltage of machine - ensure not flat batteries 2) Replace ECU 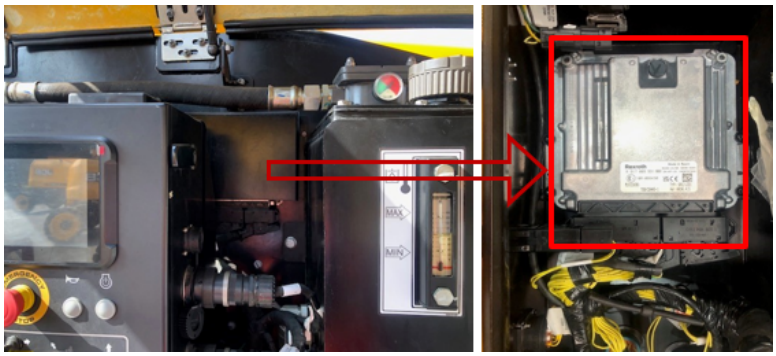 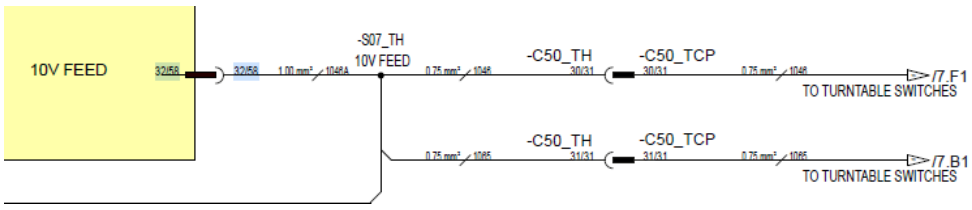

5.1.256 B1308-24

Error code:	**B1308-24**
ECU	Base ECU
Description :	Base Startlock Stuck (Proportional output short to high)

© 2025 Enter your company name

Component :	ECU
Vehicle reaction:	Base ECU Software execution terminated. ECU does not run. Machine disabled.
Possible Cause:	1. Short Circuit 2. Excessive load 3. Water Ingress
Service Action:	1) A short-circuit to high fault exists on the proportional outputs (Solenoids) from the Base Bosch ECU. 2) Check Fuse_03 has not blown at the turntable control panel. 3) Check voltage supply up to turntable ECU connector, pins: 1/58, 3/58, 4/58, 5/58, 6/58. 4) The following pins are potential causes: VP_1 (All on 96 way connector) Pins 1/96, 2/96, 3/96, 4/96, 5/96, 25/96, 26/96, 27/96, 28/96, 29/96, 30/96, 31/96, 49/96, 50/96, 51/96, 52/96, 53/96, 54/96, 73/96, 74/96, 75/96, 76/96, 77/96, 78/96 (Only marked pins are connected) 5) Disconnect 96-way connector from Base Bosch ECU and check pins for damage, debris or water ingress. 6) If voltage supply is okay, check I/O page in the turntable display to see which output is on. 7) Measure voltage at the pins shown above, looking for a high voltage. Trace fault back along path when found. 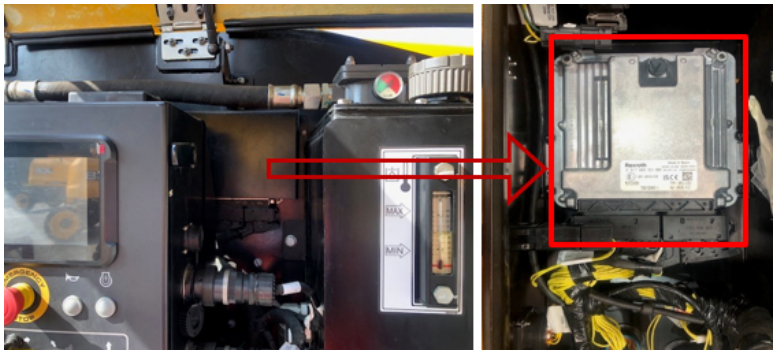

5.1.257 **B1309-24**

Error code:	**B1309-24**
ECU	Base ECU

© 2025 Enter your company name

Description:	Base Startlock Stuck (Proportional output short to high)
Component:	ECU
Vehicle reaction:	Base ECU Software execution terminated. ECU does not run. Machine disabled.
Possible Cause:	1. Short Circuit 2. Excessive load 3. Water Ingress
Service Action:	1) A short-circuit to high fault exists on the proportional outputs (Solenoids) from the Base Bosch ECU. 2) Check Fuse_03 has not blown at the turntable control panel. 3) Check voltage supply up to turntable ECU connector, pins: 1/58, 3/58, 4/58, 5/58, 6/58. 4) The following pins are potential causes: VP_1 (All on 96 way connector) Pins 1/96, 2/96, 3/96, 4/96, 5/96, 25/96, 26/96, 27/96, 28/96, 29/96, 30/96, 31/96, 49/96, 50/96, 51/96, 52/96, 53/96, 54/96, 73/96, 74/96, 75/96, 76/96, 77/96, 78/96 (Only marked pins are connected) 5) Disconnect 96-way connector from Base Bosch ECU and check pins for damage, debris or water ingress. 6) If voltage supply is okay, check I/O page in the turntable display to see which output is on. 7) Measure voltage at the pins shown above, looking for a high voltage. Trace fault back along path when found. 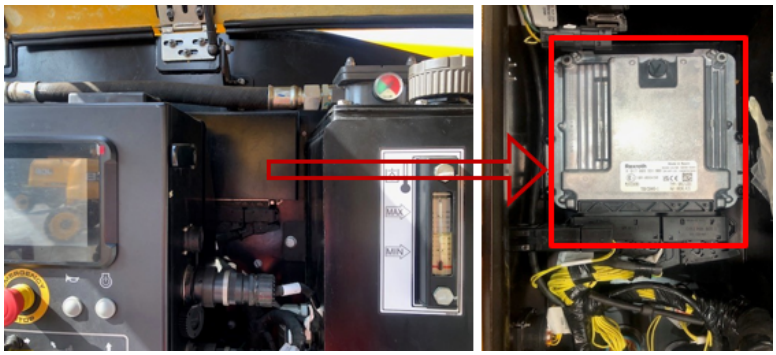

5.1.258 **B1310-24**

Error code:	**B1310-24**

© 2025 Enter your company name

ECU	Base ECU
Description:	Base Startlock Stuck (Base Enable Switch enabled during startup)
Component:	Base ECU
Vehicle reaction:	All Turntable Control Panel controls disabled. Base enable switch must be reset before base controls can be used.
Possible Cause:	Base Enable Switch set to active during start-up
Service Action:	1. The Base Enable switch on the Turntable Control Panel is enabled during startup. 2. Check switch not held active during startup. 3. Check for short circuit at rear of switch. 4. Check voltage at Base Bosch ECU pin 36/96. Pin should be 10V when enabled and less than 3v when disabled. If Switch is unpressed at startup and value is 10V or higher, check Wire #0047 for short to 10V or High. 5. Check function of switch. 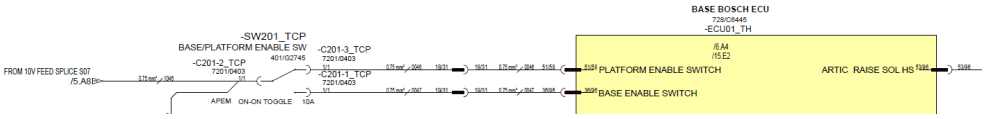

5.1.259 B1312-24

Error code:	**B1312-24**
ECU	Base ECU
Description:	Base Startlock Stuck (Input enabled during startup)
Component:	Base ECU
Vehicle reaction:	Incorrectly enabled switch on Turntable Control Panel is disabled. All other functions operate as normal. Switch must be reset before function can operate.

© 2025 Enter your company name

Possible Cause:	Base Input enable at start-up
Service Action:	1) An input to the Base ECU has been enabled during startup. 2) Check no switches physically held on during startup. 3) Check inputs on Display to see which input is held high 4) Visually Check wiring to all switches in base control panel. 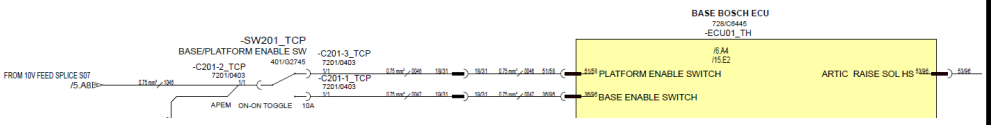

5.1.260 B1314-24

Error code:	**B1314-24**
ECU	Platform ECU
Description:	Platform Startlock Stuck (Generic output fault)
Component:	Platform ECU
Vehicle reaction:	TxDM1
Possible Cause:	1. Short Circuit 2. Excessive load 3. Water Ingress
Service Action:	1) VSS 2 (+10V) Voltage at Pin 32/58 on the Platform Bosch ECU is equal to or below +9.5V. Voltage can be measured at DIN Rail Terminal -S11-4_PCP. Check other wires coming from this DIN Rail Terminal (#1070, #1076, #1078, #1085, #1086) Try removing these wires one at a time to narrow down fault location.If no fault found, check platform ECU Connector for bent pins, debris, water ingress or any other reason a short to ground may exist. If fault remains, change the ECU. 2) Check System voltage

© 2025 Enter your company name

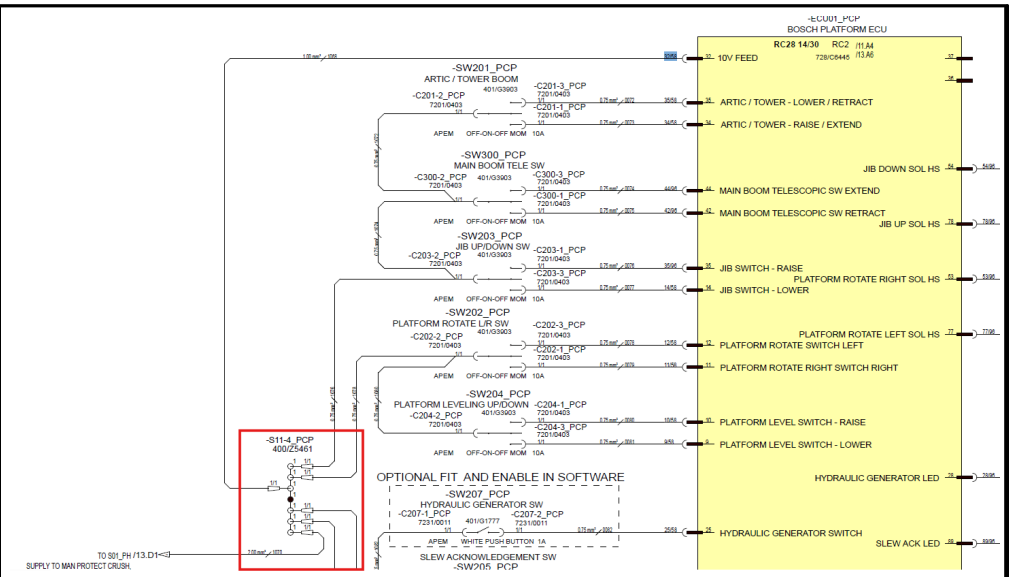

5.1.261 B1316-24

Error code:	B1316-24
ECU	Platform ECU
Description:	Platform Startlock Stuck (Base Startlock Stuck (Generic o/p fault)
Component:	Platform ECU
Vehicle reaction:	Platform ECU Software execution terminated. ECU does not run. Machine disabled.
Possible Cause:	1) Low system voltage 2) Faulty ECU
Service Action:	1) Test system voltage of machine - ensure not flat batteries 2) Replace ECU

© 2025 Enter your company name

	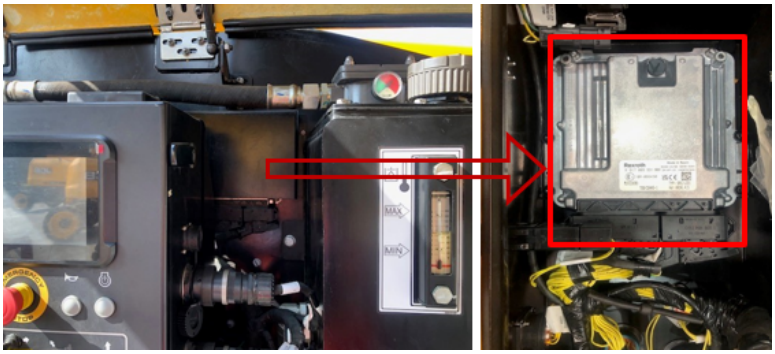

5.1.262 **B1317-24**

Error code:	**B1317-24**
ECU	Platform ECU
Description:	Platform Startlock Stuck (Proportional output short to high)
Component:	Platform ECU
Vehicle reaction:	Platform ECU Software execution terminated. ECU does not run. Machine disabled.
Possible Cause:	1) Short Circuit to high 2) Water Ingress 3) Faulty ECU
Service Action:	1) A short-circuit to high fault exists on the proportional outputs (Solenoids) from the Platform Bosch ECU. 2) Check voltage supply up to platform ECU connector, pins: 1/58, 3/58, 4/58, 5/58, 6/58. 3) Check Fuse_06 has not blown at the turntable control panel. 4) The following pins are potential causes: VP_1 (All on 96 way connector) Pins 1/96, 2/96, 3/96, 5/96, 4/96, 25/96, 26/96, 27/96, 28/96, 29/96, 30/96, 31/96, 49/96, 50/96, 51/96, 52/96, 53/96, 54/96, 73/96, 74/96, 75/96, 76/96, 77/96, 78/96 (Only pin 53 is connected) i.e. all proportional outputs. 5) Check Platform Interconnect -C22_PCP pin R, Check Jib/Platform Rotate Solenoid connector -C03_PH. Check Solenoid -SOL 22_PH.

© 2025 Enter your company name

6) Disconnect 96-way connector from Platform Bosch ECU and check pins for damage, debris or water ingress.

7) Measure voltage at the pins shown above, looking for a high voltage. Trace fault back along path when found..



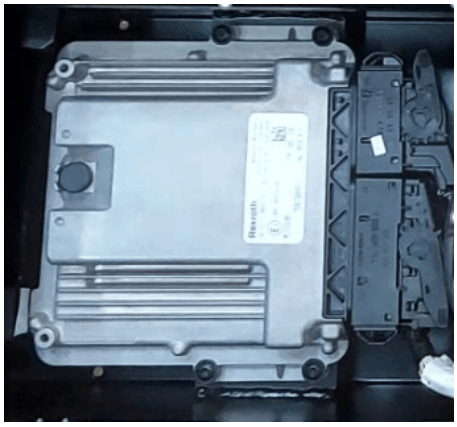

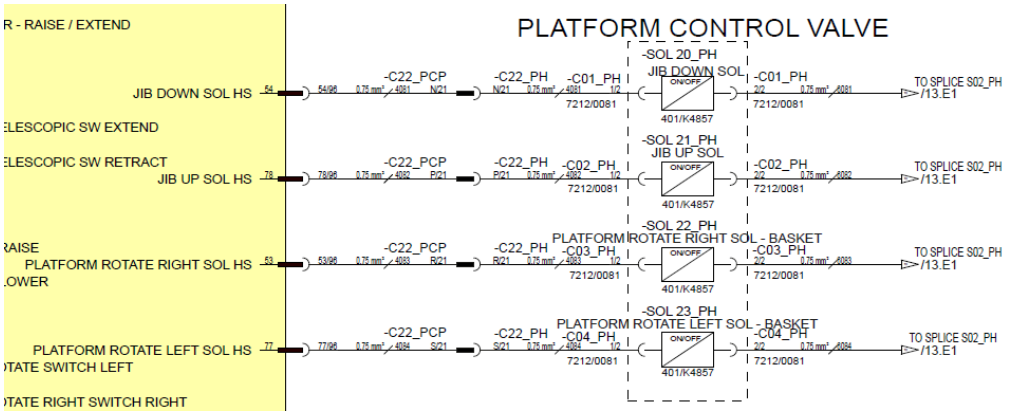

5.1.263 B1318-24

Error code:	B1318-24
ECU	Platform ECU

© 2025 Enter your company name

Description:	Platform Startlock Stuck (Switched output short to high)
Component:	Platform ECU
Vehicle reaction:	Platform ECU Software execution terminated. ECU does not run. Machine disabled.
Possible Cause:	1) Short Circuit to high 2) Water Ingress 3) Faulty ECU
Service Action:	1) A short-Circuit to high fault exists on the switch outputs. 2) Check Fuse_06 has not blown at the turntable control panel. 3) Check voltage supply up to platform ECU connector, pins: 1/58, 3/58, 4/58, 5/58, 6/58. 4) The following are potential causes: VP_2 (96 way Connector) Pins: 6/96, 7/96, 89/96, 90/96, 93/96, 94/96. (i.e. all switch outputs. The short to high is back feeding the ECU and making unsafe to start up) or (58 way Connector) Pins: 41/58, 41/58, 43/58, 56/58, 57/58 (only Pin 41 connected - Fault LED). Check all connected components for damage or wiring faults. 5) Disconnect 58-way and 96-way connector from Platform Bosch ECU and check pins for damage, debris or water ingress. 6) Measure voltage at the pins shown above, looking for a high voltage. Trace fault back along path when found..

© 2025 Enter your company name



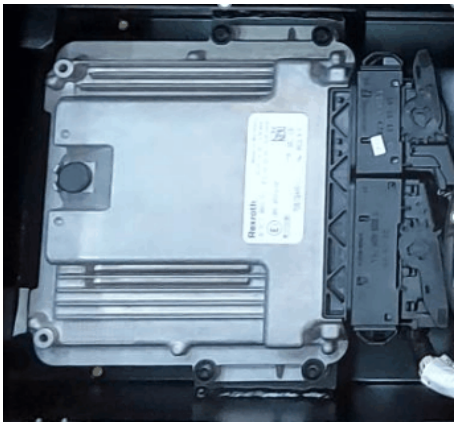

5.1.264 **B1319-24**

Error code:	B1319-24
ECU	Platform ECU
Description:	Platform Startlock Stuck (Foot Switch enabled during start up)
Component:	Platform ECU
Vehicle reaction:	All Platform Control Panel controls disabled. Foot switch must be reset before platform controls can be used.
Possible Cause:	Base input enabled at startup.
Service Action:	1) The Foot switch at the Platform is pressed during startup. 2) Check switch not held active during startup.

© 2025 Enter your company name

	3) Check for short circuit at rear of switch or at Interconnect -C220_FP. Contacts should be closed when switch pressed, Open when switch is not pressed. 4) Check voltage at Platform Bosch ECU pin 47/96. Pin should be 10V when enabled and less than 3v when disabled. If Switch is unpressed at startup and value is 10V or higher, check Wire #4096 for short to 10V or High. 5) Check function of switch. Check for water ingress or damage to Harness.  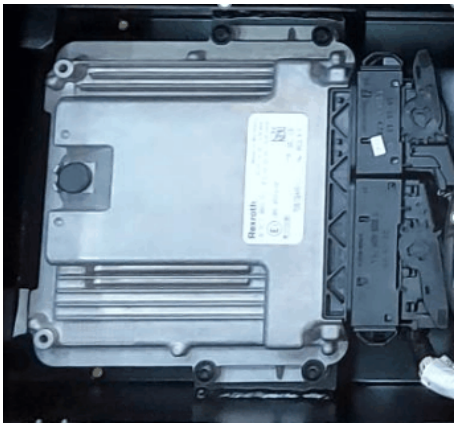 

5.1.265 **B1320-24**

Error code:	B1320-24
ECU	Platform ECU

© 2025 Enter your company name

Description:	Platform Startlock Stuck (Internal ECU fault detected)
Component:	Platform ECU
Vehicle reaction:	Platform ECU Software execution terminated. ECU does not run. Machine disabled.
Possible Cause:	Internal ECU Fault.
Service Action:	Hardware monitor detected fault in internal VSS supplies. Replace ECU. 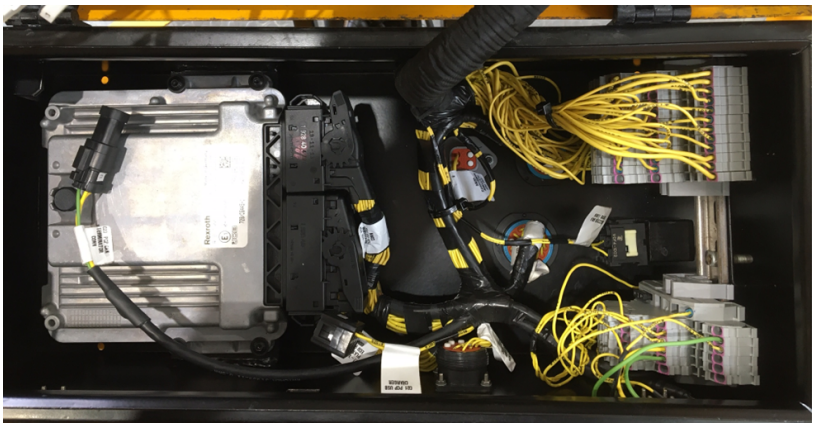 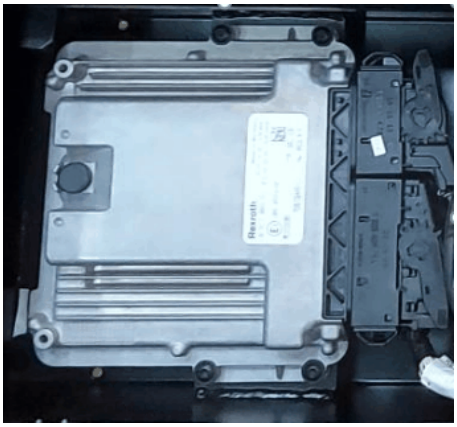

5.1.266 **B1321-24**

Error code:	**B1321-24**

© 2025 Enter your company name

ECU	Platform ECU
Description:	Platform Startlock Stuck (Input enabled during startup)
Component:	Platform ECU
Vehicle reaction:	Incorrectly enabled switch on Platform Control Panel is disabled. All other functions operate as normal. Switch must be reset before function can operate.
Possible Cause:	Base input enabled at startup.
Service Action:	1) An input to the Platform ECU has been enabled during startup. 2) Check no switches physically held on during startup. 3) Check inputs on Display to see which input is held high 4) Visually Check wiring to all switches in base control panel.  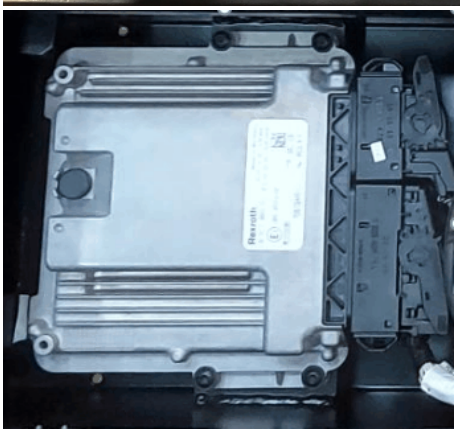

© 2025 Enter your company name

5.1.267 **B1329-13**

Error code:	**B1329-13**
ECU	Base ECU
Description :	JIB/PLATFORM FLOW High Side Sol Short Circuit to High
Component :	Jib/Platform Solenoid
Vehicle reaction:	Detect failure mode for Short Circuit to High and disable platform rotate and allow Jib functions Note: Before Ignition ON, POST Fail (stuck in startup logic for Short Circuit to High only) and Generic Disable output fault.
Possible Cause:	1. A short circuit within the wiring harness 2. A short circuit within the harness connectors 3. Water damage/ingress within the harness connectors 4. Damaged component
Service Action:	1. Locate Jib Up / Platform Right solenoid connector -C16_TH. Disconnect connector and measure voltage at pin 1/2. If voltage is high, check harness and Base Bosch ECU Connector terminal 7/96 for short to high. 2. Measure voltage at -C16_TH pin 2/2. If voltage is high, check return path for short to high. 3. Check -C16_TH and Base Bosch ECU Connector for water ingress, damage, debris or stray wires that may cause short circuit. 4. Check for any damage to the harness or components that may cause short circuit.

© 2025 Enter your company name

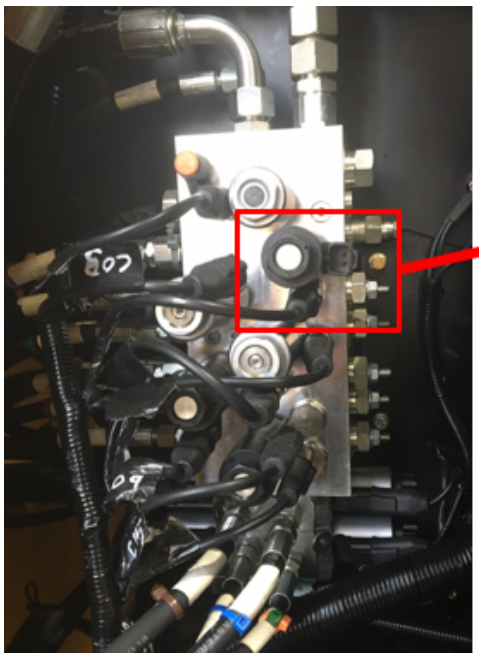

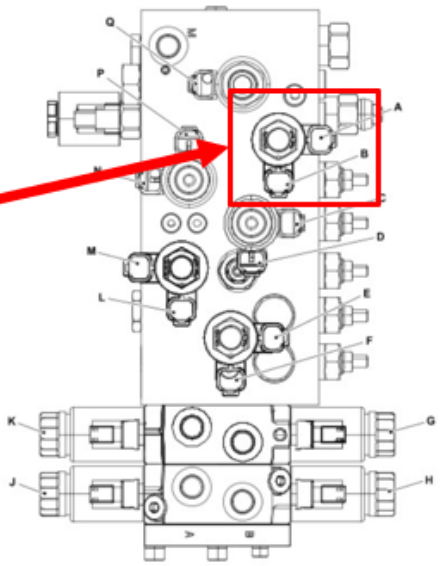

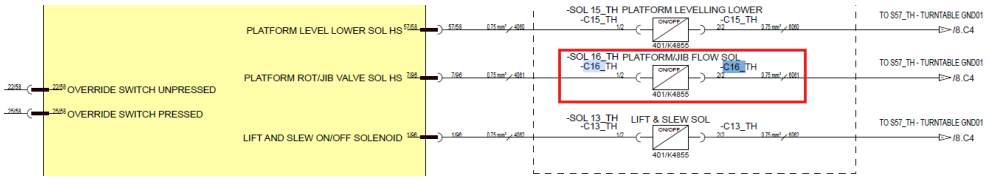

5.1.268 B1330-16

Error code:	B1330-16
ECU	Base ECU
Description:	JIB/PLATFORM FLOW High Side Solenoid Short Circuit to Low
Component:	Jib/Platform Solenoid
Vehicle reaction:	Detect failure mode for Short Circuit to Low and disable platform rotate and allow Jib functions
Possible Cause:	1. A short circuit within the wiring harness 2. A short circuit to the chassis 3. A short circuit within the harness connectors 4. Water damage/ingress within the harness connectors 5. Damaged component

© 2025 Enter your company name

Service Action:	1. Locate Jib Up / Platform Right solenoid connector -C16_TH. Disconnect connector and test pin 1/2 for short to GND. Check harness and Base Bosch ECU Connector terminal 7/96 for short to GND. 2. Test for short to GND at -C16_TH pin 2/2. Check return path for short to GND. 3. Check -C16_TH and Base Bosch ECU Connector for water ingress, damage, debris or stray wires that may cause short circuit. 4. Check for any damage to the harness or components that may cause short circuit. 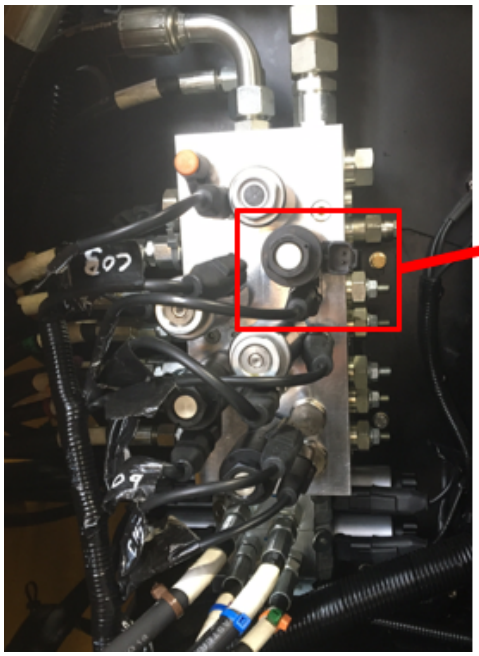 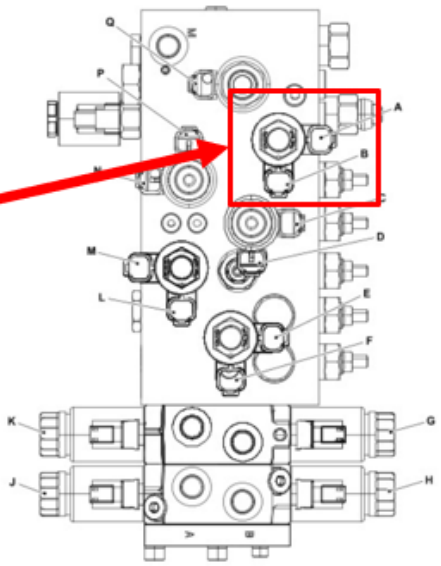 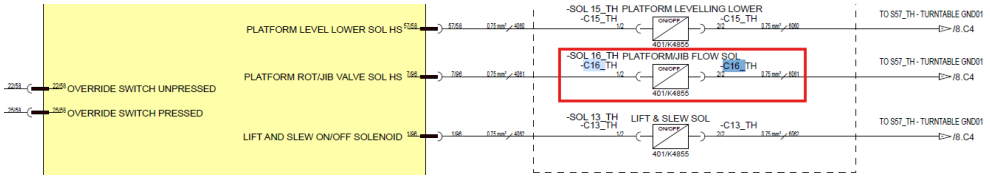

5.1.269 B1331-13

Error code:	**B1331-13**
ECU	Base
Description:	FORWARD OR REVERSE Proportional Solenoid Valve Fault
Component:	Drive Solenoid

© 2025 Enter your company name

Vehicle reaction:	Detect failure mode with Safe out method - Switch drive output (but not steer) to off (Brake comes ON automatically) Before Ignition ON, POST Fail (stuck in startup logic) and Generic output fault.
Possible Cause:	1. A short circuit within the wiring harness 2. A short circuit within the harness connectors 3. Water damage/ingress within the harness connectors 4. Damaged component
Service Action:	1. Check harness from Base Bosch ECU through to Transmission Pump connectors -C18_TH and -C19_TH. Disconnect connectors and test for short circuits with multi-meter. 2. Check condition of connectors at Base Bosch ECU and Transmission pump connectors 3. Check for water ingress at connectors including within ECU mounted connector and Solenoid mounted connectors. 4. Check harness for any visible damage such as abrasions and pinching. 5. Disconnect connector -C18_TH and -C19_TH from the Pump coil . Measure resistance from Terminal to GND. If a short exists, check wire #4064, 4065, 6064,6065,6066 to Base Bosch ECU pin 52/96, 76/96, 86/96. 6. Check Wire #4064 and 4065 is not shorted to GND / Chassis. Check for abrasions and pinching. 7. Check condition of pins in Base Bosch ECU. Check for Bent pins, debris or stray wires causing a short. 8. Check for water ingress in the Base Bosch ECU Connectors. 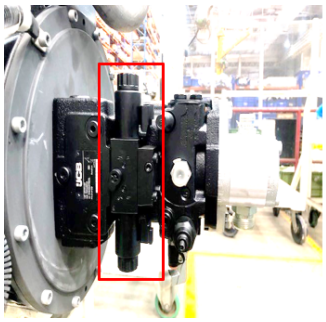 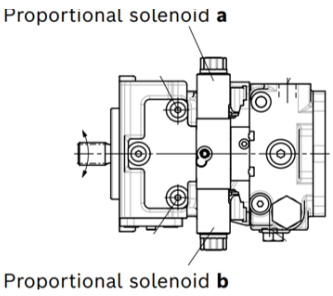 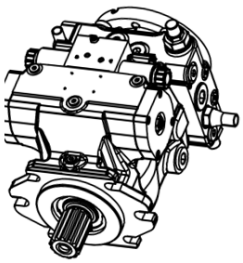 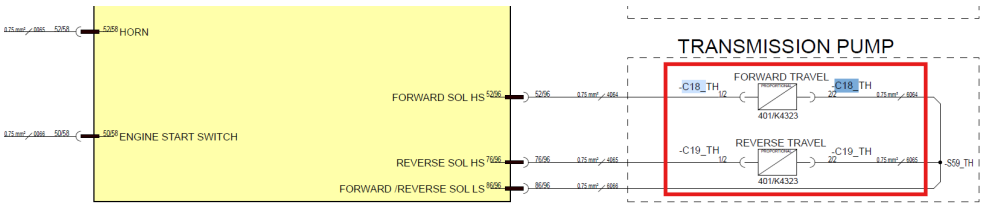

© 2025 Enter your company name

5.1.270 B1332-17

Error code:	B1332-17
ECU	Base ECU
Description:	PUBLIC Proportional Solenoid Valve Low Side Short Circuit to High
Component:	PUBLIC Proportional Solenoid Valve
Vehicle reaction:	Public proportional solenoid will be switched off, this will effect:Articulated boom, steer, leveling, jib, platform rotate, telescopic boom.
Possible Cause:	1. Poor connection 2. Break in wiring 3. Water in connector 4. Broken pin or connector 5. Damage solenoid
Service Action:	1. Check resistance of the coil 5-10 ohms 2. Check wiring from ecu to the coil 3. Turn machine ignition on/off to clear code 4. Check wire on solenoid connector C11_TH Pin 1 and 2. 5. Check wire no. 4047 and 4058 for any loose connection, cut or any damage. 6. Check if valve is mechanically jammed 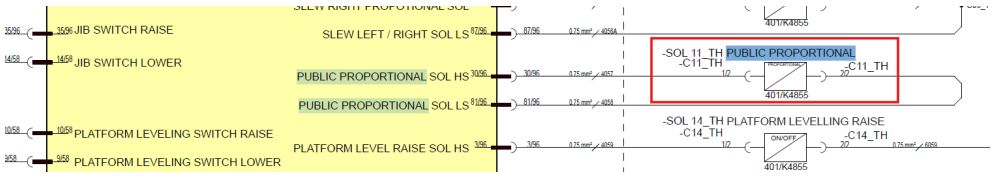

5.1.271 B1333-16

Error code:	B1333-16

© 2025 Enter your company name

ECU	Base ECU
Description:	PUBLIC Proportional Solenoid Valve Low Side Short Circuit to Low
Component:	PUBLIC Proportional Solenoid Valve
Vehicle reaction:	Public proportional solenoid will be switched off, this will effect:Articulated boom, steer, leveling, jib, platform rotate, telescopic boom.
Possible Cause:	1. Poor connection 2. Break in wiring 3. Water in connector 4. Broken pin or connector 5. Damage solenoid
Service Action:	1. Check resistance of the coil 5-10 ohms 2. Check wiring from ecu to the coil 3. Turn machine ignition on/off to clear code 4. Check wire on solenoid connector C11_TH Pin 1 and 2. 5. Check wire no. 4047 and 4058 for any loose connection, cut or any damage. 6. Check if valve is mechanically jammed 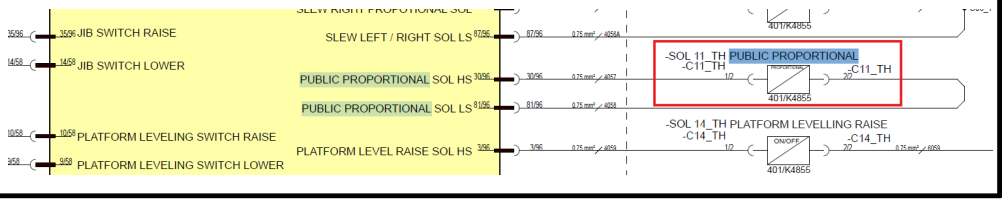

5.1.272 B1334-13

Error code:	**B1334-13**
ECU	Base ECU
Description:	PUBLIC Proportional Solenoid Valve Fault

© 2025 Enter your company name

Component :	PUBLIC Proportional Solenoid Valve
Vehicle reaction:	Detect failure mode with Safout method - Switch Public Prop. output (related to all switch functions) to off
Possible Cause:	1. Poor connection 2. Break in wiring 3. Water in connector 4. Broken pin or connector 5. Damage solenoid
Service Action:	1. Check resistance of the coil 5-10 ohms 2. Check wiring from ECU to the coil 3. Turn machine ignition on/off to clear code 4. Check wire on solenoid connector C11_TH Pin 1 and 2. 5. Check wire no. 4047 and 4058 for any loose connection, cut or any damage. 6. Check if valve is mechanically jammed 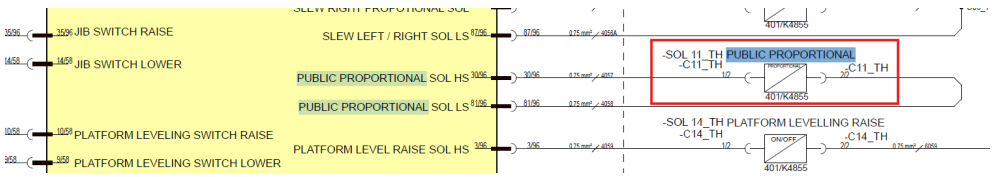

5.1.273 B1335-17

Error code:	**B1335-17**
ECU	Base ECU
Description :	Main Boom - Main Boom Solenoid Valve Low Side Short Circuit to High.
Component :	Main Boom Solenoid

© 2025 Enter your company name

Vehicle reaction:	Detect failure mode with Safout method - Switch Main Boom output to off Before Ignition ON, POST Fail (stuck in start up logic) and Generic output fault
Possible Cause:	1. A short circuit within the wiring harness 2. A short circuit within the harness connectors 3. Water damage/ingress within the harness connectors 4. Damaged component
Service Action:	1. Base Bosch ECU terminal 84/96 measuring short circuit to high (12V). Locate and disconnect Main Boom Lower Solenoid Connector -C06_TH and measure voltage at Pin 2/2. If High, Locate and disconnect the Main Boom Raise Connector -C05_TH and measure voltage again at -C06_TH Pin 2/2. If voltage remains high, inspect return path back to ECU terminal 84/96 (Wire #4047A). If voltage drops when either connector is removed, then check the high side to the solenoid connectors back to the ECU (Wires #4045 and #4046). 2. Check the harness for any faults, abrasions or pinching that may cause short circuit. 3. Check all connectors (above) for any water ingress, short circuits, damage or stray wires that may cause a short. 4. Check solenoid connector for any damage. 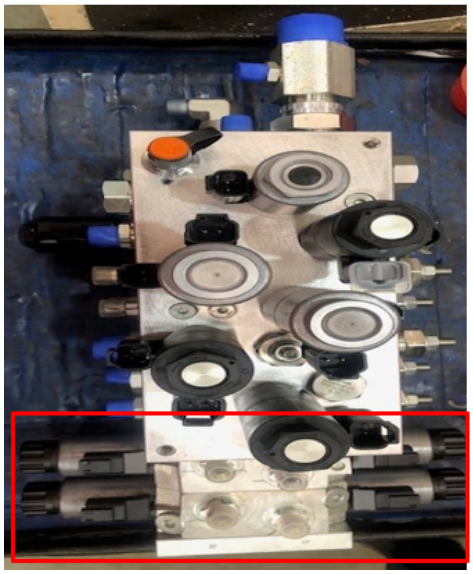 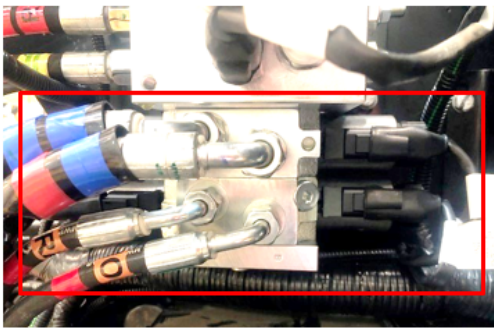 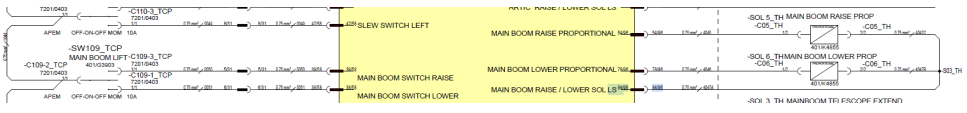

5.1.274 **B1336-16**

Error code:	**B1336-16**

© 2025 Enter your company name

ECU	Base ECU
Description:	MAIN BOOM RAISE OR LOWER PROPORTIONAL Solenoid Valve Low Side Short Circuit to Low
Component:	MAIN BOOM RAISE OR LOWER PROPORTIONAL Solenoid Valve
Vehicle reaction:	Disable main-boom raise and lower outputs
Possible Cause:	1. Poor connection 2. Break in wiring 3. Water in connector 4. Broken pin or connector 5. Damage solenoid
Service Action:	1. Check resistance of the coil 5-10 ohms 2. Check wiring from coil to ECU wire 4045,4046 & 4047A, 4047B, 4047C for cut, pinch or and damage. 3. Check ECU Pin 54/96, 78/96, 84/96 for bend or back out or any damage. 4. Check solenoid connector C05_TH and C06_TH for loose connection or any damage. 5. Check if valve is mechanically jammed 6. Turn machine ignition on/off to clear code. 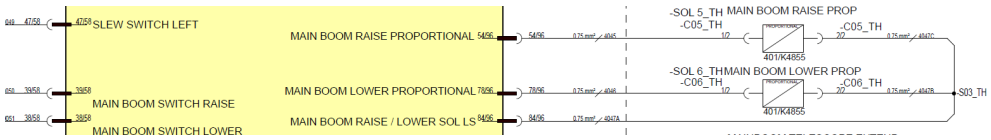

5.1.275 **B1337-13**

Error code:	**B1337-13**
ECU	Base ECU
Description:	Main Boom - Main Boom Solenoid Valve Low Side Open Circuit.

© 2025 Enter your company name

Component :	Main Boom Solenoid
Vehicle reaction:	Detect failure mode with Safout method - Switch Main Boom output to off
Possible Cause:	1. A poor connection or damaged terminal within the connector(s) 2. A damaged or broken wire within the wiring harness 3. Component is damaged
Service Action:	1. Locate Main Boom Raise/Lower Solenoid Connectors -C05_TH and -C06_TH. Ensure both connectors are fully seated. 2. Check wiring and terminations at both connectors 3. Check continuity from both connectors pin 2/2 back to the Base Bosch ECU terminal 84/96. 4. Check ECU terminal is not backed out or damaged. 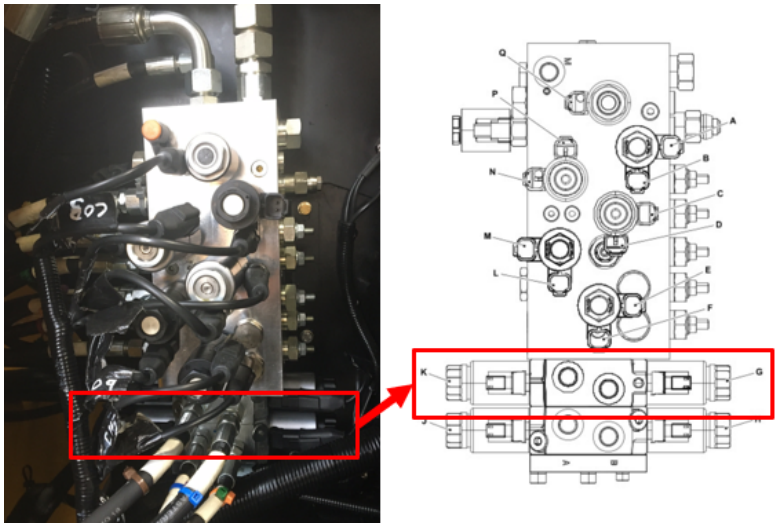 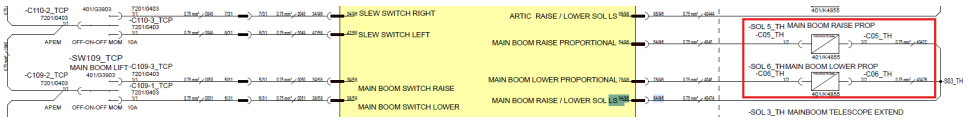

5.1.276 **B1338-17**

Error code:	**B1338-17**
ECU	Base ECU
Description :	Slew - Slew Solenoid Value Low Side Short Circuit to High

© 2025 Enter your company name

Component:	Slew Solenoid
Vehicle reaction:	Detect failure mode with Safout method - Switch Slew output to off Note: Before Ignition ON, POST Fail (stuck in start up logic) and Generic output fault
Possible Cause:	1. A short circuit within the wiring harness 2. A short circuit within the harness connectors 3. Water damage/ingress within the harness connectors 4. Damaged component
Service Action:	1. Base Bosch ECU terminal 87/96 measuring short circuit to high (12V). Locate and disconnect Slew Right Solenoid Connector -C08_TH and measure voltage at Pin 2/2. If High, Locate and disconnect the Slew Left Connector -C07_TH and measure voltage again at -C08_TH Pin 2/2. If voltage remains high, inspect return path back to ECU terminal 87/96 (Wire #4056A). If voltage drops when either connector is removed, then check the high side to the solenoid connectors back to the ECU (Wires #4054 and #4055). 2. Check the harness for any faults, abrasions or pinching that may cause short circuit. 3. Check all connectors (above) for any water ingress, short circuits, damage or stray wires that mau cause a short. 4. Check solenoid connector for any damage. 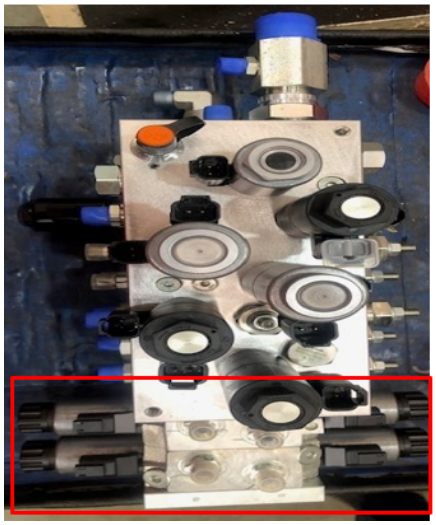 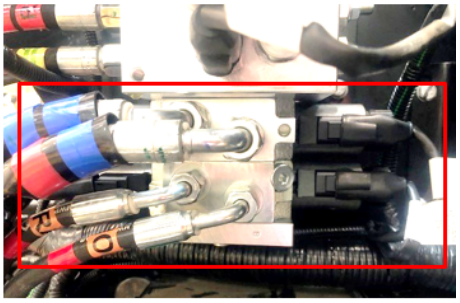 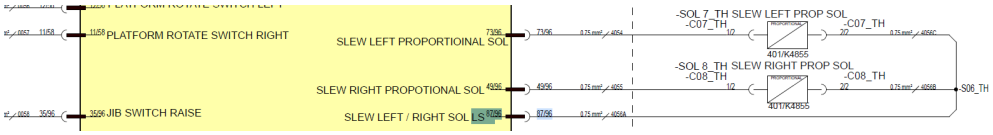

© 2025 Enter your company name

5.1.277 B1339-16

Error code:	B1339-16
ECU	Base ECU
Description:	Slew - Slew Solenoid Value Low Side Short Circuit to Low.
Component:	Slew Solenoid
Vehicle reaction:	Detect failure mode with Safout method - Switch Slew output to off
Possible Cause:	1. A short circuit within the wiring harness 2. A short circuit to the chassis 3. A short circuit within the harness connectors 4. Water damage/ingress within the harness connectors 5. Damaged component
Service Action:	1. Base Bosch ECU terminal 87/96 measuring short circuit to GND. Locate and disconnect Slew Right Solenoid Connector -C08_TH and measure resistance at Pin 2/2 to GND. if short circuit, Locate and disconnect the Slew Left Connector -C07_TH and measure resistance again at -C08_TH Pin 2/2. If short remains, inspect return path back to ECU terminal 87/96 (Wire #4056A). If short to GND disappears when either connector is removed, then check the high side to the solenoid connectors back to the ECU (Wires #4054 and #4055). 2. Check the harness for any faults, abrasions or pinching that may cause short circuit. 3. Check all connectors (above) for any water ingress, short circuits, damage or stray wires that may cause a short. 4. Check solenoid connector for any damage.

© 2025 Enter your company name

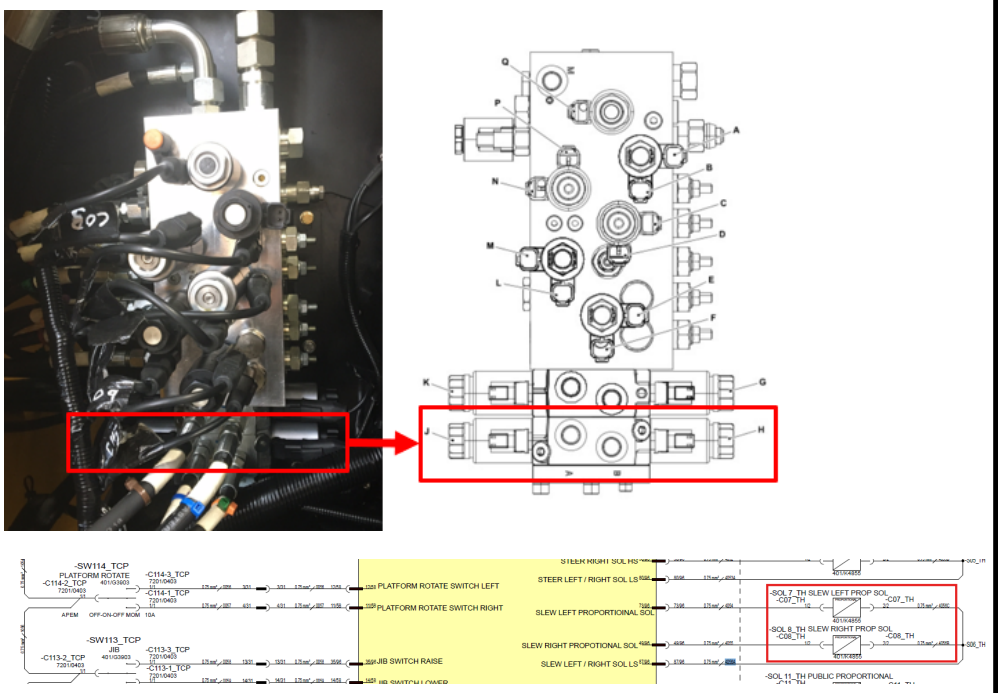

5.1.278 B1340-13

Error code:	B1340-13
ECU	Base ECU
Description:	Slew - Slew Solenoid Value Low Side Open Circuit.
Component:	Slew Solenoid
Vehicle reaction:	Detect failure mode with Safout method - Switch Slew output to off
Possible Cause:	1. A poor connection or damaged terminal within the connector(s) 2. A damaged or broken wire within the wiring harness 3. Component is damaged
Service Action:	1. Locate Slew Left/Right Solenoid Connectors -C07_TH and -C08_TH. Ensure both connectors are fully seated. 2. Check wiring and terminations at both connectors 3. Check continuity from both connectors pin 2/2 back to the Base Bosch ECU terminal 87/96. 4. Check ECU terminal is not backed out or damaged.

© 2025 Enter your company name

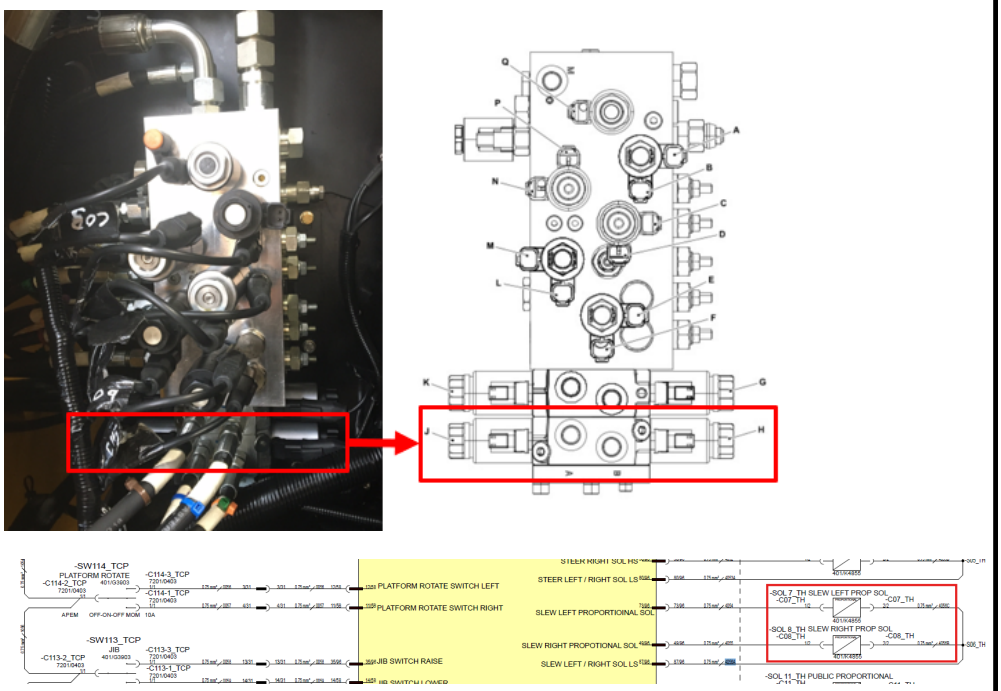

5.1.279 B1341-17

Error code:	B1341-17
ECU	Base ECU
Description :	MAIN BOOM EXTEND OR RETRACT DIRECTIONAL Solenoid Valve Low Side Short Circuit to High
Component :	MAIN BOOM EXTEND OR RETRACT DIRECTIONAL Solenoid Valve
Vehicle reaction:	Detect failure mode with Safout method - Switch this output to off Before Ignition ON, POST Fail (stuck in startup logic) and Generic output fault
Possible Cause:	1. A short circuit within the wiring harness 2. A short circuit within the harness connectors 3. Water damage/ingress within the harness connectors 4. Damaged component
Service Action:	1. Check wiring between ECU and solenoid for voltage greater than 10.5 volts. 2. check for continuity to ground. 3. Check wiring from coil to ECU wire 4048,4049 & 4050A, 4050B, 4050C for cut, pinch or and damage.

© 2025 Enter your company name

	4. Check ECU Pin 73/96, 49/96, 87/96 for bend or back out or any damage. 5. Check solenoid connector C04_TH and C03_TH for loose connection or any damage. 6. Check if valve is mechanically jammed 7. Turn machine ignition on/off to clear code. 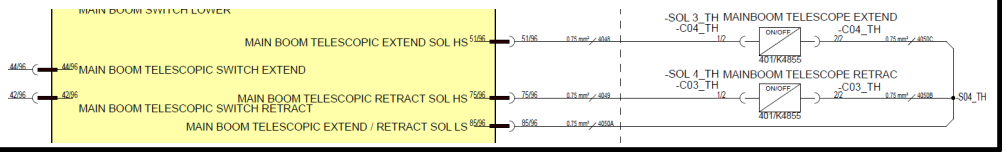

5.1.280 B1342-16

Error code:	B1342-16
ECU	Base ECU
Description:	MAIN BOOM EXTEND OR RETRACT DIRECTIONAL Solenoid Valve Low Side Short Circuit to Low
Component:	MAIN BOOM EXTEND OR RETRACT DIRECTIONAL Solenoid Valve
Vehicle reaction:	Detect failure mode with Safout method - Switch this output to off Before Ignition ON, POST Fail (stuck in startup logic) and Generic output fault
Possible Cause:	1. A short circuit within the wiring harness 2. A short circuit within the harness connectors 3. Water damage/ingress within the harness connectors 4. Damaged component
Service Action:	1. Check wiring between ECU and solenoid for voltage greater than 10.5 volts. 2. check for continuity to ground. 3. Check wiring from coil to ECU wire 4048,4049 & 4050A, 4050B, 4050C for cut, pinch or and damage. 4. Check ECU Pin 73/96, 49/96, 87/96 for bend or back out or any damage. 5. Check solenoid connector C04_TH and C03_TH for loose connection or any damage. 6. Check if valve is mechanically jammed

© 2025 Enter your company name

	7. Turn machine ignition on/off to clear code. 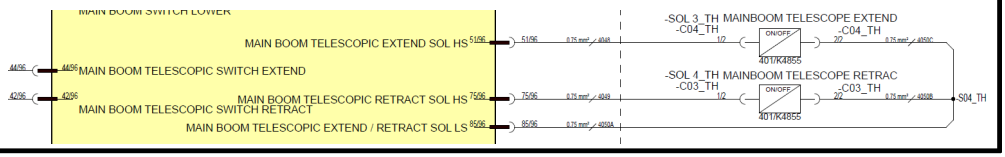

5.1.281 B1344-17

Error code:	**B1344-17**
ECU	Base ECU
Description :	STEER RIGHT OR LEFT DIRECTIONAL Solenoid Valve Low Side Short Circuit to High
Component :	STEER RIGHT OR LEFT DIRECTIONAL Solenoid Valve
Vehicle reaction:	Detect failure mode with Safout method - Switch Steer output to off
Possible Cause:	1. Poor or loose connection 2. Break in wiring 3. Water in connector 4. Broken pin or connector 5. Faulty or Damage solenoid
Service Action:	1.Check coil resistance 5-10 ohms 2. Check wiring from coil to ECU wire 4051,4052 & 4053A, 4053B, 4053C for cut, pinch or and damage. 3. Check ECU Pin 74/96, 50/96, 80/96 for bend or back out or any damage. 4. Check solenoid connector C09_TH and C10_TH for loose connection or any damage. 5. Check if valve is mechanically jammed. 6 Turn ignition on off to clear code.

© 2025 Enter your company name

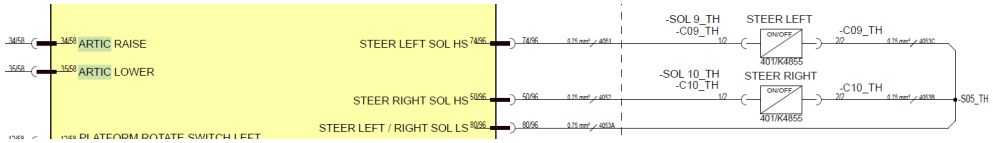

5.1.282 B1345-16

Error code:	B1345-16
ECU	Base ECU
Description:	STEER RIGHT OR LEFT DIRECTIONAL Solenoid Valve Low Side Short Circuit to Low
Component:	STEER RIGHT OR LEFT DIRECTIONAL Solenoid Valve
Vehicle reaction:	Detect failure mode with Safout method - Switch Steer output to off
Possible Cause:	1. Poor or loose connection 2. Break in wiring 3. Water in connector 4. Broken pin or connector 5. Faulty or Damage solenoid
Service Action:	1.Check coil resistance 5-10 ohms 2. Check wiring from coil to ECU wire 4051,4052 & 4053A, 4053B, 4053C for cut, pinch or and damage. 3. Check ECU Pin 74/96, 50/96, 80/96 for bend or back out or any damage. 4. Check solenoid connector C09_TH and C10_TH for loose connection or any damage. 5. Check if valve is mechanically jammed. 6 Turn ignition on off to clear code.

© 2025 Enter your company name

	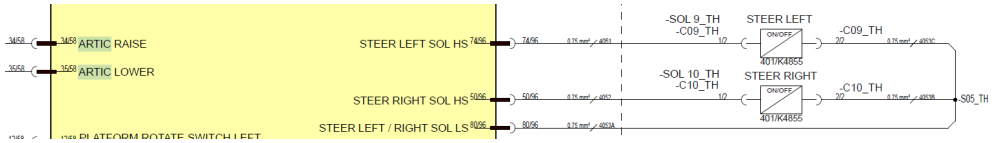

5.1.283 B1347-17

Error code:	**B1347-17**
ECU	Base ECU
Description:	Oscillation Axle - Oscillating Axle Solenoid Value Low Side Short Circuit to High.
Component:	Oscillating Axle Solenoid
Vehicle reaction:	Detect failure mode with Safout method - Switch Axle Lock output to off; Before Ignition ON, POST Fail (stuck in startup logic) and Generic output fault
Possible Cause:	1. A short circuit within the wiring harness 2. A short circuit within the harness connectors 3. Water damage/ingress within the harness connectors 4. Damaged component
Service Action:	1. Locate Axle Lock Solenoid connector -C02_CH and disconnect from the valve block. Measure voltage at pin 2/2. If voltage is high, disconnect interconnect -C24_TH / -C24_TH and measure pin 2/12 on both connectors. Trace the fault back to high from the connector measuring high. 2. Check Base Bosch CU connector. Examine Pin 82/96 - check for bent pins, debris, stray wires, water ingress. 3. Check all connectors for water ingress 4. Check harness for damage, especially abrasions, pinching. Check all connectors for damage. Check solenoid valve connector for any water ingress, debris etc.

© 2025 Enter your company name

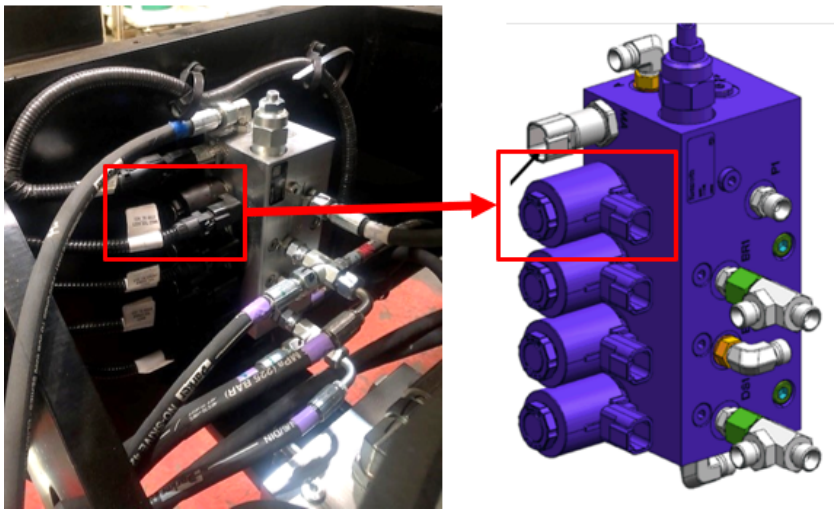

5.1.284 B1348-16

Error code:	B1348-16
ECU	Base ECU
Description:	Oscillation Axle - Oscillating Axle Solenoid Value Low Side Short Circuit to Low.
Component:	Oscillating Axle Solenoid
Vehicle reaction:	Detect failure mode with Safout method - Switch Axle Lock output to off;
Possible Cause:	1. A short circuit within the wiring harness 2. A short circuit to the chassis 3. A short circuit within the harness connectors 4. Water damage/ingress within the harness connectors 5. Damaged component
Service Action:	1. Locate Axle Lock Solenoid connector -C02_CH and disconnect from the valve block. Measure resistance to GND / Chassis at pin 2/2. If resistance is low, disconnect interconnect -C24_TH / -C24_TH and measure pin 2/12 on

© 2025 Enter your company name

	both connectors. Trace the fault back to GND Short from the connector measuring Low. 2. Check Base Bosch CU connector. Examine Pin 82/96 - check for bent pins, debris, stray wires, water ingress. 3. Check all connectors for water ingress 4. Check harness for damage, especially abrasions, pinching. Check all connectors for damage. Check solenoid valve connector for any water ingress, debris etc. 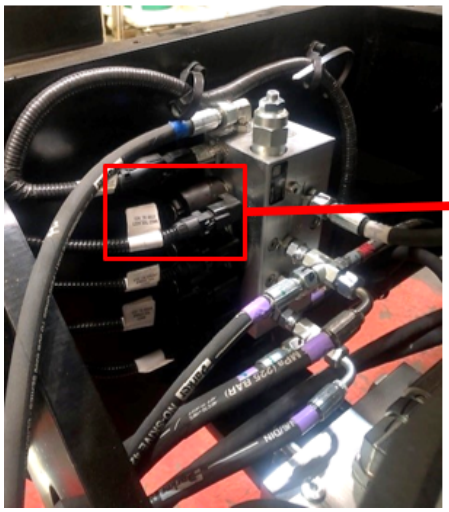 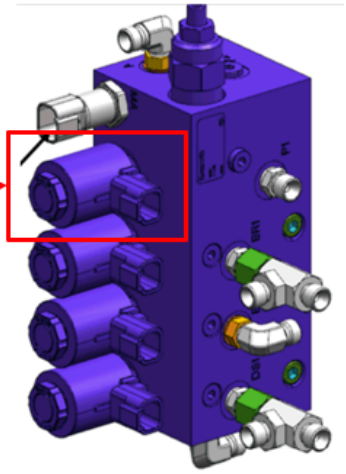 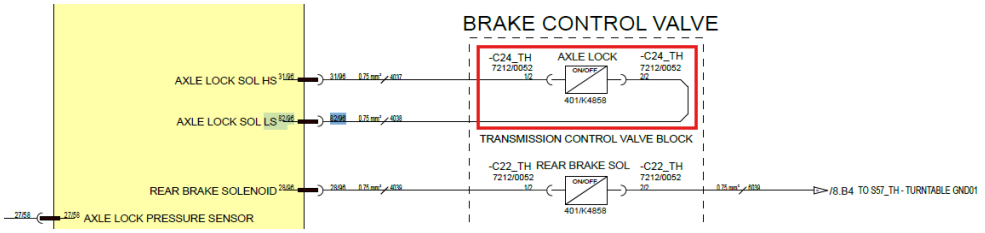

5.1.285 B1349-13

Error code:	B1349-13
ECU	Base ECU
Description:	Oscillating Axle - Oscillating Axle Solenoid Value Fault.
Component:	Oscillating Axle Solenoid
Vehicle reaction:	Detect failure mode with Safout method - Switch Axle Lock output to off;

© 2025 Enter your company name

Possible Cause:	1. A short or open circuit within the wiring harness 2. A short or open circuit within the harness connectors 3. Water damage/ingress within the harness connectors 4. Damaged component
Service Action:	1. Locate Axle Lock Solenoid Connector -C24_TH. Disconnect the connector and inspect. Check for backed out pins, water ingress, broken or poorly terminated wires, damaged terminals. Inspect Solenoid valve connector also, checking for any damage, debris, water ingress etc. 2. Perform continuity checks. Check Pin 1/2 to Base Bosch ECU terminal 31/96 (Wire #4037). Check Pin 2/2 to Base Bosch ECU terminal 82/96 (Wire #4038). 3. Check Interconnects -C56_TH / -C56_CH. ensure seated correctly. Check for damage, backed out pins, water ingress, damaged wires etc. 4. Check Base Bosch ECU connector (96-way) for any damage, bent pins, backed out pins, water ingress or any other damage that may cause issue. 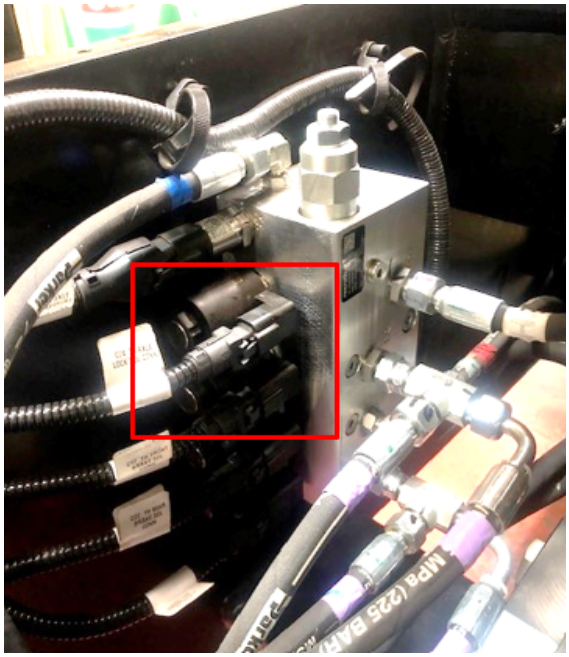 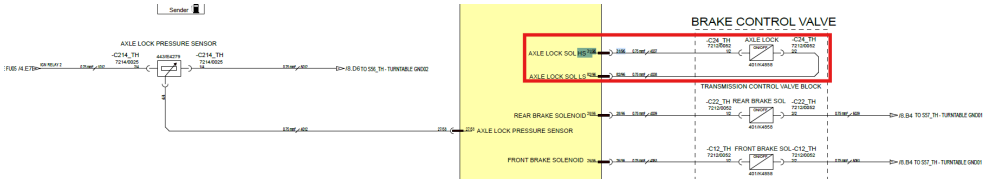

5.1.286 **B1350-17**

Error code:	**B1350-17**
ECU	Base ECU

© 2025 Enter your company name

Description:	ARTICULATED BOOM RAISE OR LOWER DIRECTIONAL Solenoid Valve Low Side Short Circuit to High
Component:	ARTICULATED BOOM RAISE OR LOWER DIRECTIONAL Solenoid Valve
Vehicle reaction:	Disable articulated boom outputs
Possible Cause:	1. Poor or loose connection 2. Break in wiring 3. Water in connector 4. Broken pin or connector 5. Faulty or Damage solenoid
Service Action:	1. Check coil resistance 5-10 ohms 2. Check wiring from coil to ECU wire 4042,4043 & 4044A, 4044B, 4044C for cut, pinch or and damage. 3. Check ECU Pin 53/96, 77/96, 88/96 for bend or back out or any damage. 4. Check solenoid connector C01_TH and C02_TH for loose connection or any damage. 5. Check if valve is mechanically jammed 6.Turn ignition on off to clear code 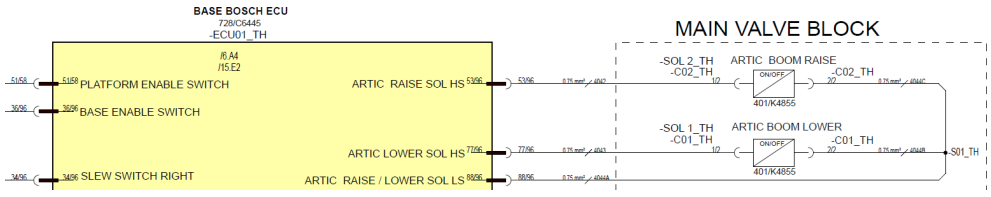

5.1.287 B1351-16

Error code:	**B1351-16**
ECU	Base ECU
Description:	ARTICULATED BOOM RAISE OR LOWER DIRECTIONAL Solenoid Valve Low Side Short Circuit to Low

© 2025 Enter your company name

Component :	ARTICULATED BOOM RAISE OR LOWER DIRECTIONAL Solenoid Valve
Vehicle reaction:	Disable articulated boom outputs
Possible Cause:	1. Poor or loose connection 2. Break in wiring 3. Water in connector 4. Broken pin or connector 5. Faulty or Damage solenoid
Service Action:	1. Check coil resistance 5-10 ohms 2. Check wiring from coil to ECU wire 4042,4043 & 4044A, 4044B, 4044C for cut, pinch or and damage. 3. Check ECU Pin 53/96, 77/96, 88/96 for bend or back out or any damage. 4. Check solenoid connector C01_TH and C02_TH for loose connection or any damage. 5. Check if valve is mechanically jammed 6.Turn ignition on off to clear code 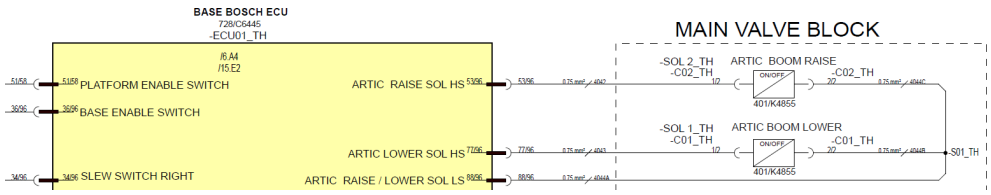

5.1.288 B1353-16

Error code:	**B1353-16**
ECU	Base ECU
Description :	Ignition - Engine Ignition Short Circuit to Low.
Component :	Engine Ignition

© 2025 Enter your company name

Vehicle reaction:	Detect failure mode. Switch output to off
Possible Cause:	1. A short circuit within the wiring harness 2. A short circuit to the chassis 3. A short circuit within the harness connectors 4. Water damage/ingress within the harness connectors 5. Damaged component
Service Action:	1. Locate wire #4027 from Base Bosch ECU pin 89/96. Check wire through to interconnect -C41_TH / -C41_EH pin 1/12. Test for short to GND. Disconnect Interconnects and test for short to GND again on both connectors Pin 1/12 2. Locate wire #4027 from interconnect -C41_EH Pin 1/12 and check wire through to Engine ECU Connector -C05_EH Pin 44/62. Check for shorts to GND 3. Check Base Bosch ECU, Interconnects and Engine ECU Connectors for water ingress, damage, bent pins, debris or stray wires. 4. Check harness between Base Bosch ECU to Interconnects and Engine ECU Connectors for any damage   

5.1.289 **B1354-13**

Error code:	**B1354-13**
ECU	Base ECU

© 2025 Enter your company name

Description:	Ignition - Engine Ignition Open Circuit or Short Circuit to High.
Component:	Engine Ignition
Vehicle reaction:	Detect failure mode. Switch output to off
Possible Cause:	1. A short circuit within the wiring harness 2. A short circuit within the harness connectors 3. Water damage/ingress within the harness connectors 4. Damaged component
Service Action:	1. Locate wire #4027 from Base Bosch ECU pin 89/96. Check wire through to interconnect -C41_TH / -C41_EH pin 1/12. Test for short to high. Disconnect Interconnects and test for short to high again on both connectors Pin 1/12 2. Locate wire #4027 from interconnect -C41_EH Pin 1/12 and check wire through to Engine ECU Connector -C05_EH Pin 44/62. Check for shorts to High. 3. Check Base Bosch ECU, Interconnects and Engine ECU Connectors for water ingress, damage, bent pins, debris or stray wires. 4. Check harness between Base Bosch ECU to Interconnects and Engine ECU Connectors for any damage.



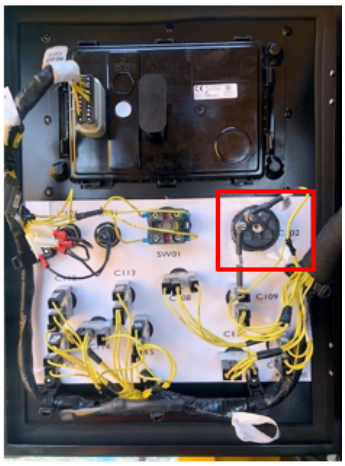

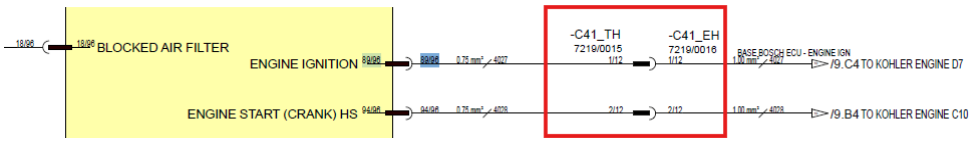

5.1.290 **B1355-16**

Error code:	**B1355-16**

© 2025 Enter your company name

ECU	Base ECU
Description:	HYDRAULIC GENERATOR Valve Short Circuit to Low
Component:	Hydraulic Generator Valve
Vehicle reaction:	Detect failure mode. Switch output to off
Possible Cause:	1. A short circuit within the wiring harness 2. A short circuit to the chassis 3. A short circuit within the harness connectors 4. Water damage/ingress within the harness connectors 5. Damaged component
Service Action:	1. Locate wire #4041 from Base Bosch ECU to Hydraulic Generator Solenoid connector -C25_TH. Disconnect -C25_TH and measure resistance to GND on Pin 1/2. If value low then check wire back to Base Bosch ECU. 2. Check Bosch ECU pin 41/58 for any damage, bent pins, debris, water ingress. 3. Check Wire #4041 for abrasions, pinching or any other reason to create short to GND / Chassis 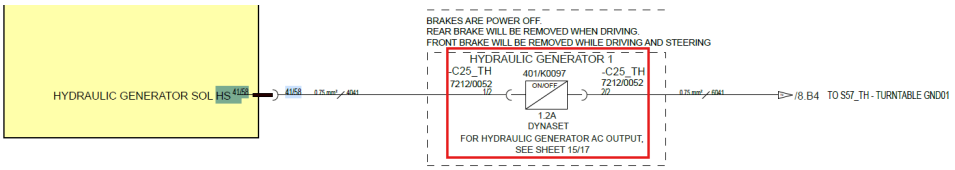

5.1.291 **B1356-13**

Error code:	**B1356-13**
ECU	Base ECU
Description:	HYDRAULIC GENERATOR Valve High Side Short Circuit to High or Open Circuit
Component:	Hydraulic Generator Valve
Vehicle reaction:	Detect failure mode. Switch output to off

© 2025 Enter your company name

Possible Cause:	1. A short or pen circuit within the wiring harness 2. A short or open circuit within the harness connectors 3. Water damage/ingress within the harness connectors 4. Damaged component
Service Action:	1. Locate wire #4041 from Base Bosch ECU to Hydraulic Generator Solenoid connector -C25_TH. Disconnect -C25_TH and measure voltage at Pin 1/2. If value high (>10.7V) then check wire back to Base Bosch ECU. 2. Check Bosch ECU pin 41/58 for any damage, bent pins, debris, water ingress. 3. Check Wire #4041 for abrasions, pinching or any other reason to create short to GND / Chassis 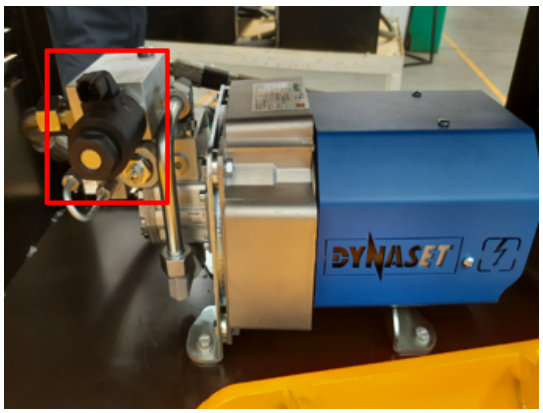 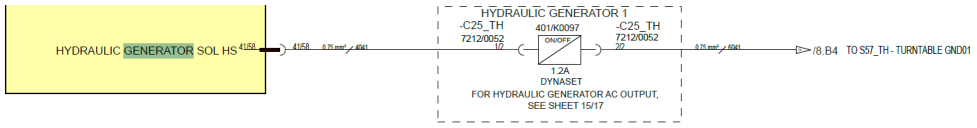

5.1.292 B1357-16

Error code:	**B1357-16**
ECU	Base ECU
Description:	Engine Start (Crank) High Side Signal (Base ECU to Engine ECU) Short Circuit to Low
Component:	Engine Crank
Vehicle reaction:	Detect failure mode. Switch output to off

© 2025 Enter your company name

Possible Cause:	1. A short circuit within the wiring harness 2. A short circuit to the chassis 3. A short circuit within the harness connectors 4. Water damage/ingress within the harness connectors 5. Damaged component
Service Action:	1. Locate wire #4028 from Base Bosch ECU pin 94/96 to interconnect -C41_TH. Disconnect -C41_TH from mating half -C41_EH. Measure voltage at pin 2/12 on both interconnect connectors. If one is stuck high, then trace to fault. 2. Check continuity from interconnect pins 2/12 back to Base Bosch ECU pin 94/96 and to engine ECU on connector -C05_EH pin 39/62. 3. Check all connectors mentioned above for damage, backed out pins, short circuits and water ingress 4. Check wire #4028 back through the harness, checking for breaks, abrasions, pinching or any other damage. 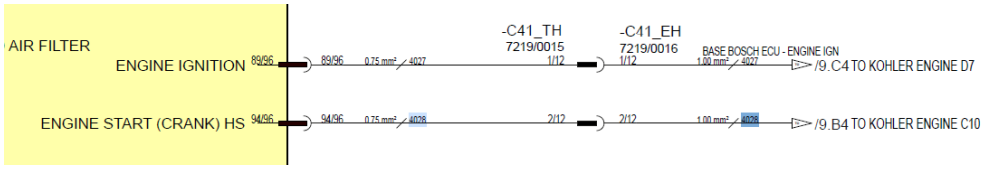

5.1.293 B1358-13

Error code:	**B1358-13**
ECU	Base ECU
Description:	Engine Start (Crank) High Side Signal (Base ECU to Engine ECU) Short Circuit to High or Open Circuit
Component:	Engine Crank
Vehicle reaction:	Detect failure mode. Switch output to off
Possible Cause:	1. A short or open circuit within the harness. 2. A short or open circuit within the harness connectors. 3. Water damage/ingress within the harness connectors. 4. Damaged component(s).
Service Action:	1. Check continuity between Base Bosch ECU Pin 94/96 and Engine ECU Pin 39/92 (Wire #408). Check Wire #4028 is not short circuit to high. 2. Check ECU Connectors and inter connector -C41. Ensure no bent pins or stray wires causing short circuit. Ensure wires are correctly terminated.

© 2025 Enter your company name

	3. Check ECU Connectors and inter connector -C41 for any water damage or water ingress. 4. Check connectors and harness between Base ECU pin 94/96 and Engine ECU pin 39/92 for any damage. 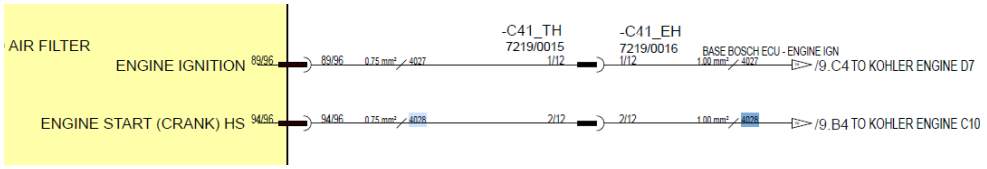

5.1.294 U0411-87

Error code:	U0411-87
ECU	Base ECU
Description:	EGR no transmission/not received failure (for CAN)
Component:	EGR
Vehicle reaction:	This error code will display an red warning light on the DECU as well as an red warning prompt.
Possible Cause:	1. Damaged harness or harness connectors. 2. Faulty EGR
Service Action:	1. Check that the electrical connector is plugged into the component. 2. Check for any debris or water inside the ECU, EGR, Machine connection connector terminals.This may be as a consequence of pressure washing the engine, loose connectors or poor connector sealing. 3. Check the harness is not damaged and is routed correctly. 4. Check the harness continuity, and machine earth contacts. 5. Check the tension on the EGR wiring connector, If under 8,0 volts verify the machine electric circuits. 6. If the error Still persists, replace the component.

© 2025 Enter your company name

	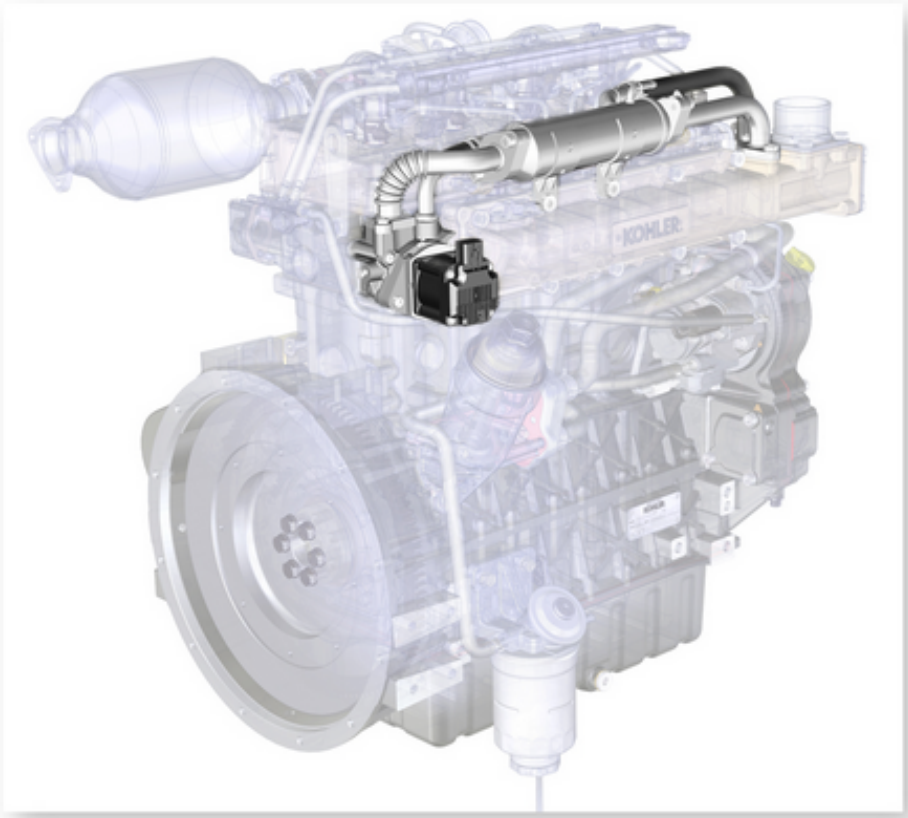

5.1.295 **U1293-87**

Error code:	**U1293-87**
ECU	Base ECU
Description :	CAN TIME OUT ERROR
Component :	ECU
Vehicle reaction:	1. Recipient transmits DM1 with SPN field = PGN of missing CAN message and FMI = 9 2. Recipient resets RC (rolling counter) to 0 3. Recipient disables all outputs 4. Transmitter re-transmits CAN message requested by Recipient with RC set to 0.
Possible Cause:	1. Incorrect software or mis configured device 2. A poor connection or damaged terminal within the connector(s)

© 2025 Enter your company name

	3. A damaged or broken wire within the wiring harness 4. Component is damaged
Service Action:	1. Connect to the machine via JCB Service Master and run the 'Vehicle Setup' tool. Ensure that the VIN number is displayed in Green and that the CAN Bus devices have paired successfully. 2. Check both can terminator resistors are placed correctly at either end of the CAN network (at base and platform control panels). Turn Ignition to OFF and remove Live link Connector from Live link ECU. Remove the CAN terminator at the base platform and then measure the resistance of CAN-L to CAN-H on the harness connector. This should measure 120 ohms. Measuring a value close to 0 ohms will indicate a short circuit on the CAN bus. To narrow down the fault location, replace the CAN terminator and then disconnect the CAN bus interconnect at -C32_TH / -C32_BH. Measure the resistance of the CAN bus on each connector, the one that reads low will be the section with the short circuit. If the original measurement was a high reading, then there is a break in the CAN bus wiring. Again, section up the CAN Bus network and complete continuity testing to isolate the faulty section. 3. Check the CAN bus wiring runs to check for damage to the harness, especially abrasions and pinching. Check there is no damage at any of the CAN device connectors (Interconnects and ECU's / Displays etc) 4. Ensure all interconnects and device connectors are fully inserted. 5. Ensure all interconnects and device connectors have no water ingress issues. 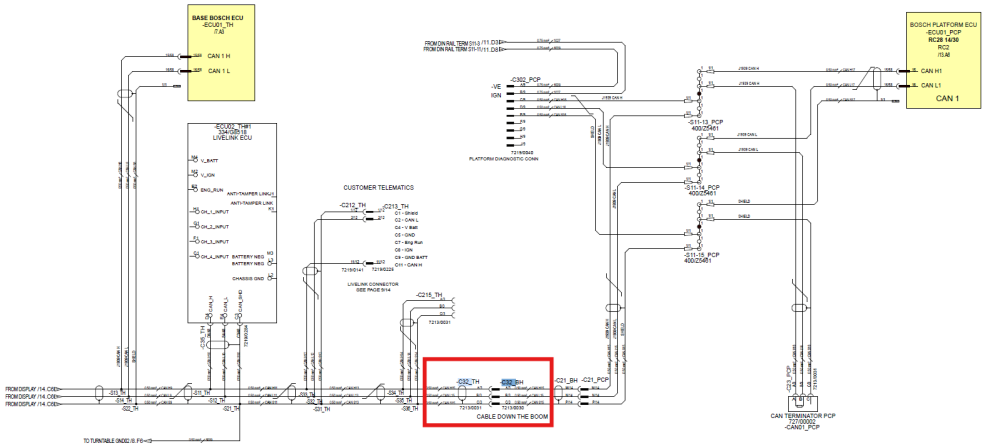

5.1.296 U1294-56

Error code:	**U1294-56**
ECU	Base ECU
Description :	CAN RC ERROR - Rolling counter for platform input signal1 message

© 2025 Enter your company name

Component:	ECU
Vehicle reaction:	Recipient ignores received CAN message and transmits DM1 with SPN field = PGN of CAN message and FMI = 10 Recipient retains existing values. Recipient resets RC (rolling counter) to 0 Transmitter re-transmits CAN message requested by Recipient with RC set to 0.
Possible Cause:	1. Incorrect software or mis configured device 2. A poor connection or damaged terminal within the connector(s) 3. A damaged or broken wire within the wiring harness 4. Component is damaged
Service Action:	1. Connect to the machine via JCB Service Master and run the 'Vehicle Setup' tool. Ensure that the VIN number is displayed in Green and that the CAN Bus devices have paired successfully. 2. Check both can terminator resistors are placed correctly at either end of the CAN network (at base and platform control panels). Turn Ignition to OFF and remove Livelink Connector from Livelink ECU. Remove the CAN terminator at the base platform and then measure the resistance of CAN-L to CAN-H on the harness connector. This should measure 120 ohms. Measuring a value close to 0 ohms will indicate a short circuit on the CAN bus. To narrow down the fault location, replace the CAN terminator and then disconnect the CAN bus interconnect at -C32_TH / -C32_BH. Measure the resistance of the CAN bus on each connector, the one that reads low will be the section with the short circuit. If the original measurement was a high reading, then there is a break in the CAN bus wiring. Again, section up the CAN Bus network and complete continuity testing to isolate the faulty section. 3. Check the CAN bus wiring runs to check for damage to the harness, especially abrasions and pinching. Check there is no damage at any of the CAN device connectors (Interconnects and ECU's / Displays etc) 4. Ensure all interconnects and device connectors are fully inserted. 5. Ensure all interconnects and device connectors have no water ingress issues.

© 2025 Enter your company name

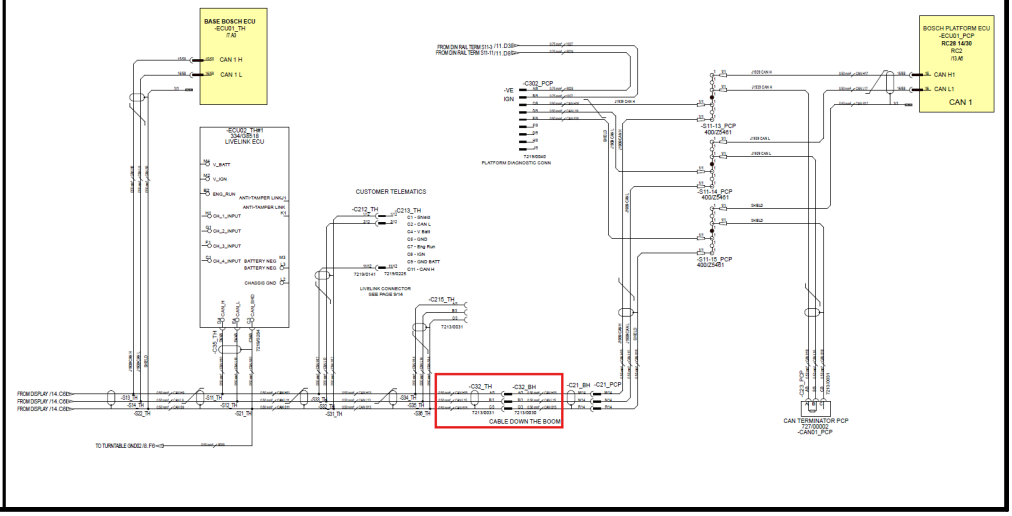

5.1.297 U1295-41

Error code:	U1295-41
ECU	Base ECU
Description:	CAN CHECK SUM ERROR
Component:	ECU
Vehicle reaction:	Recipient ignores received CAN message and transmits DM1 with SPN field = PGN of CAN message and FMI = 2 Recipient retains existing values. Recipient resets RC (rolling counter) to 0 Transmitter re-transmits CAN message requested by Recipient with RC set to 0.
Possible Cause:	1. Mismatch between transmitting and receiving message between ECU's
Service Action:	1. Connect to the machine via JCB Service Master and run the 'Vehicle Setup' tool. Ensure that the VIN number is displayed in Green and that the CAN Bus devices have paired successfully. 2. Check both can terminator resistors are placed correctly at either end of the CAN network (at base and platform control panels). Turn Ignition to OFF and remove Livelink Connector from Livelink ECU. Remove the CAN terminator at the base platform and then measure the resistance of CAN-L to CAN-H on the harness connector. This should measure 120 ohms. Measuring a value close to 0 ohms will indicate a short circuit on the CAN bus. To narrow down the fault location, replace the CAN terminator and then

© 2025 Enter your company name

	disconnect the CAN bus interconnect at -C32_TH / -C32_BH. Measure the resistance of the CAN bus on each connector, the one that reads low will be the section with the short circuit. If the original measurement was a high reading, then there is a break in the CAN bus wiring. Again, section up the CAN Bus network and complete continuity testing to isolate the faulty section. 3. Check the CAN bus wiring runs to check for damage to the harness, especially abrasions and pinching. Check there is no damage at any of the CAN device connectors (Interconnects and ECU's / Displays etc) 4. Ensure all interconnects and device connectors are fully inserted. 5. Ensure all interconnects and device connectors have no water ingress issues. 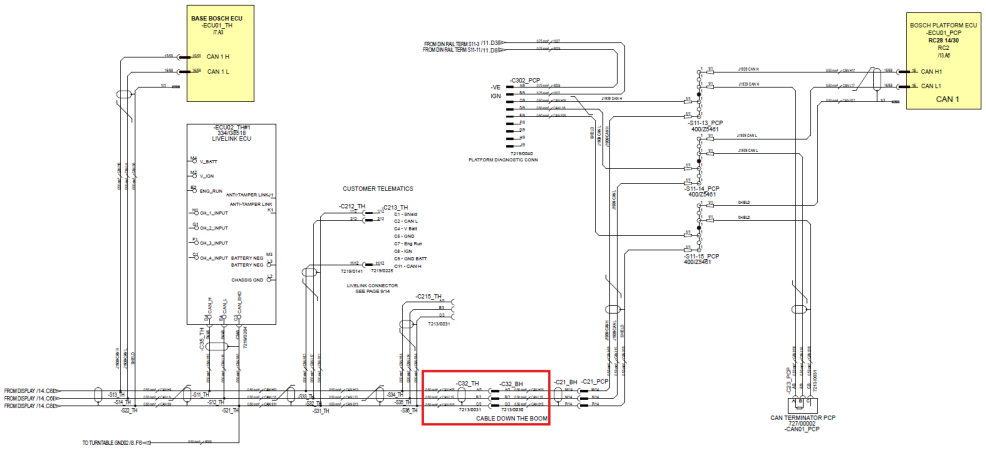

5.1.298 U1296-87

Error code:	U1296-87
ECU	Platform ECU
Description:	CAN TIME OUT ERROR
Component:	ECU
Vehicle reaction:	Recipient transmits DM1 with SPN field = PGN of missing CAN message and FMI = 9 Recipient resets RC (rolling counter) to 0 Recipient disables all outputs Transmitter re-transmits CAN message requested by Recipient with RC set to 0.

© 2025 Enter your company name

Possible Cause:	1. Mismatched or un programmed VIN number in either Bosch ECU 2. Unterminated CAN network 3. Damaged CAN network 4. Poorly connected CAN network 5. Water Ingress
Service Action:	1. Connect to the machine via JCB Service Master and run the 'Vehicle Setup' tool. Ensure that the VIN number is displayed in Green and that the CAN Bus devices have paired successfully. 2. Check both can terminator resistors are placed correctly at either end of the CAN network (at base and platform control panels). Turn Ignition to OFF and remove Livelink Connector from Livelink ECU. Remove the CAN terminator at the base platform and then measure the resistance of CAN-L to CAN-H on the harness connector. This should measure 120 ohms. Measuring a value close to 0 ohms will indicate a short circuit on the CAN bus. To narrow down the fault location, replace the CAN terminator and then disconnect the CAN bus interconnect at -C32_TH / -C32_BH. Measure the resistance of the CAN bus on each connector, the one that reads low will be the section with the short circuit. If the original measurement was a high reading, then there is a break in the CAN bus wiring. Again, section up the CAN Bus network and complete continuity testing to isolate the faulty section. 3. Check the CAN bus wiring runs to check for damage to the harness, especially abrasions and pinching. Check there is no damage at any of the CAN device connectors (Interconnects and ECU's / Displays etc) 4. Ensure all interconnects and device connectors are fully inserted. 5. Ensure all interconnects and device connectors have no water ingress issues. 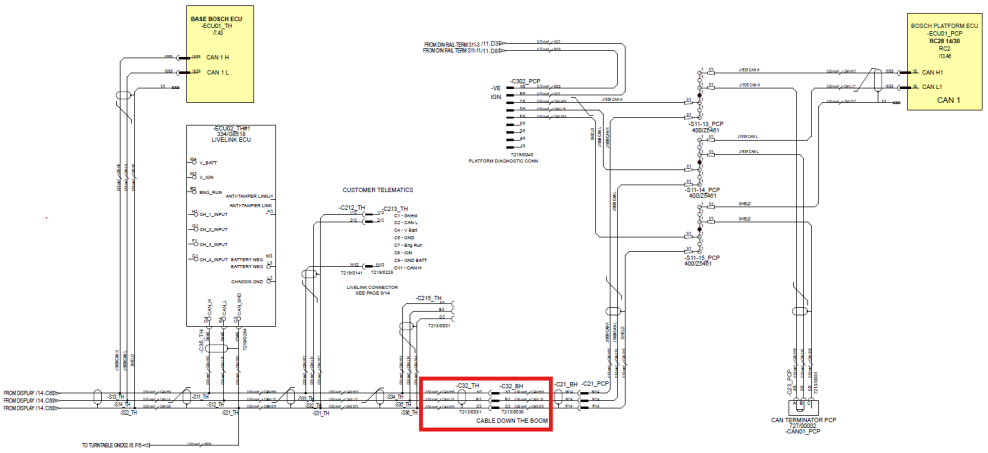

5.1.299 **U1298-41**

Error code:	**U1298-41**

© 2025 Enter your company name

ECU	Platform ECU
Description:	CAN CHECK SUM ERROR
Component:	ECU
Vehicle reaction:	Recipient ignores received CAN message and transmits DM1 with SPN field = PGN of CAN message and FMI = 2 Recipient retains existing values. Recipient resets RC (rolling counter) to 0 Transmitter re-transmits CAN message requested by Recipient with RC set to 0.
Possible Cause:	1. Mismatch between transmitting and receiving message between ECU's
Service Action:	1. Connect to the machine via JCB Service Master and run the 'Vehicle Setup' tool. Ensure that the VIN number is displayed in Green and that the CAN Bus devices have paired successfully. 2. Check both can terminator resistors are placed correctly at either end of the CAN network (at base and platform control panels). Turn Ignition to OFF and remove Livelink Connector from Livelink ECU. Remove the CAN terminator at the base platform and then measure the resistance of CAN-L to CAN-H on the harness connector. This should measure 120 ohms. Measuring a value close to 0 ohms will indicate a short circuit on the CAN bus. To narrow down the fault location, replace the CAN terminator and then disconnect the CAN bus interconnect at -C32_TH / -C32_BH. Measure the resistance of the CAN bus on each connector, the one that reads low will be the section with the short circuit. If the original measurement was a high reading, then there is a break in the CAN bus wiring. Again, section up the CAN Bus network and complete continuity testing to isolate the faulty section. 3. Check the CAN bus wiring runs to check for damage to the harness, especially abrasions and pinching. Check there is no damage at any of the CAN device connectors (Interconnects and ECU's / Displays etc) 4. Ensure all interconnects and device connectors are fully inserted. 5. Ensure all interconnects and device connectors have no water ingress issues.

© 2025 Enter your company name

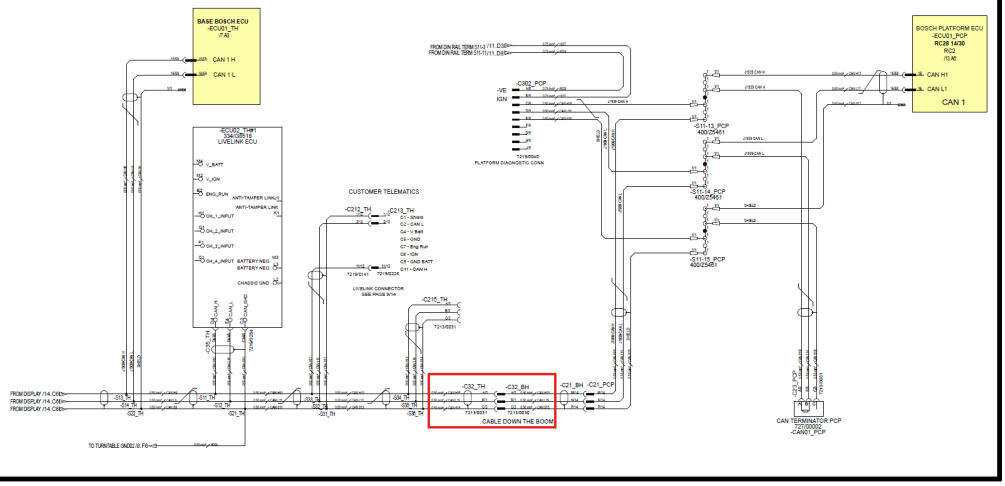

5.1.300 U1299-87

Error code:	U1299-87
ECU	BASE ECU
Description:	CAN PAIRING FAILED ERROR
Component:	BASE ECU
Vehicle reaction:	Recipient ignores received CAN message and transmits DM1 with SPN field = PGN of CAN message and FMI = 2 Recipient resets RC (rolling counter) to 0 Transmitter re-transmits CAN message requested by Recipient with RC set to 0.
Possible Cause:	1) Mismatched or un programmed VIN number in either Bosch ECU 2) Unterminated CAN network 3) Damaged CAN network 4) Poorly connected CAN network 5) Water Ingress
Service Action:	1. Check for any other faults codes that may cause an ECU to not turn on, eg startlock. If faults codes follow these fault codes first. If no other fault codes: 2. Check base and platform ECU's are available on the network, this can be done by scanning on the flash loader tool. Use vehicle setup tool.

© 2025 Enter your company name

	3. Connect to the machine via JCB Service Master and run the 'Vehicle Setup' tool. Ensure that the VIN number is displayed in Green and that the CAN Bus devices have paired successfully. 4. Check both can terminator resistors are placed correctly at either end of the CAN network (at base and platform control panels). Turn Ignition to OFF and remove Livelink Connector from Livelink ECU. Remove the CAN terminator at the base platform and then measure the resistance of CAN-L to CAN-H on the harness connector. This should measure 120 ohms. Measuring a value close to 0 ohms will indicate a short circuit on the CAN bus. To narrow down the fault location, replace the CAN terminator and then disconnect the CAN bus interconnect at -C32_TH / -C32_BH. Measure the resistance of the CAN bus on each connector, the one that reads low will be the section with the short circuit. If the original measurement was a high reading, then there is a break in the CAN bus wiring. Again, section up the CAN Bus network and complete continuity testing to isolate the faulty section. 5. Check the CAN bus wiring runs to check for damage to the harness, especially abrasions and pinching. Check there is no damage at any of the CAN device connectors (Interconnects and ECU's / Displays etc) 6. Ensure all interconnects and device connectors are fully inserted. 7. Ensure all interconnects and device connectors have no water ingress issues. 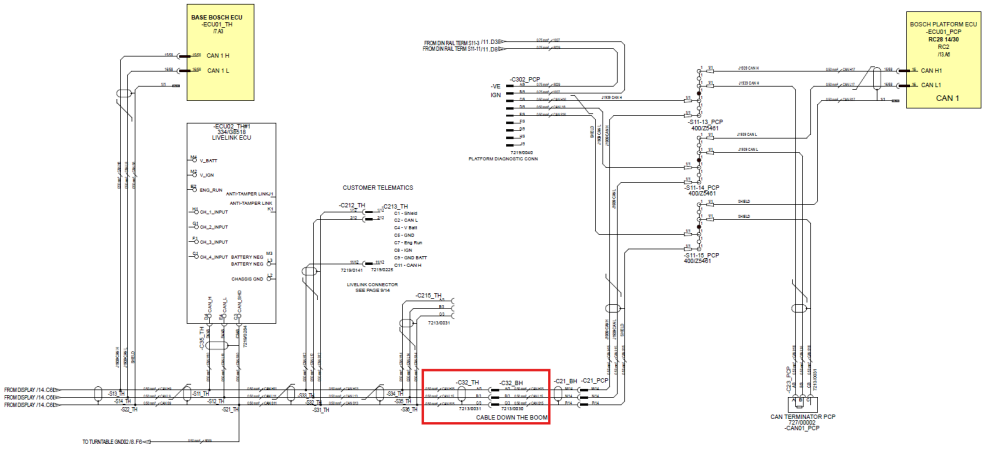

5.1.301 U1323-56

Error code:	U1323-56
ECU	Base ECU
Description:	CAN RC ERROR
Component:	ECU

© 2025 Enter your company name

Vehicle reaction:	Recipient ignores received CAN message and transmits DM1 with SPN field = PGN of CAN message and FMI = 10 Recipient retains existing values. Recipient resets RC (rolling counter) to 0 Transmitter re-transmits CAN message requested by Recipient with RC set to 0.
Possible Cause:	1. Mismatched or un programmed VIN number in either Bosch ECU 2. Unterminated CAN network 3. Damaged CAN network 4. Poorly connected CAN network 5. Water Ingress
Service Action:	1. Connect to the machine via JCB Service Master and run the 'Vehicle Setup' tool. Ensure that the VIN number is displayed in Green and that the CAN Bus devices have paired successfully. 2. Check both can terminator resistors are placed correctly at either end of the CAN network (at base and platform control panels). Turn Ignition to OFF and remove Livelink Connector from Livelink ECU. Remove the CAN terminator at the base platform and then measure the resistance of CAN-L to CAN-H on the harness connector. This should measure 120 ohms. Measuring a value close to 0 ohms will indicate a short circuit on the CAN bus. To narrow down the fault location, replace the CAN terminator and then disconnect the CAN bus interconnect at -C32_TH / -C32_BH. Measure the resistance of the CAN bus on each connector, the one that reads low will be the section with the short circuit. If the original measurement was a high reading, then there is a break in the CAN bus wiring. Again, section up the CAN Bus network and complete continuity testing to isolate the faulty section. 3. Check the CAN bus wiring runs to check for damage to the harness, especially abrasions and pinching. Check there is no damage at any of the CAN device connectors (Interconnects and ECU's / Displays etc) 4. Ensure all interconnects and device connectors are fully inserted. 5. Ensure all interconnects and device connectors have no water ingress issues.

© 2025 Enter your company name

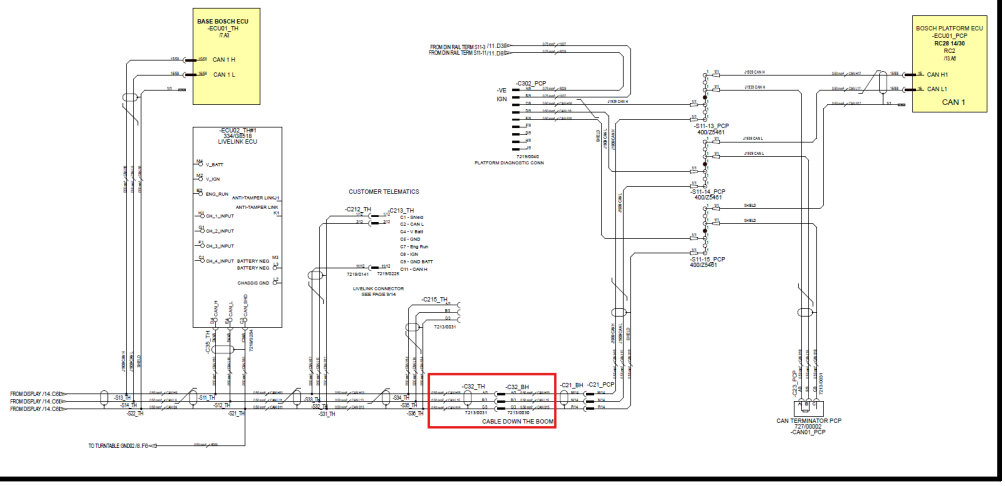

5.1.302 U1324-56

Error code:	U1324-56
ECU	Base ECU
Description:	CAN RC ERROR
Component:	ECU
Vehicle reaction:	Recipient ignores received CAN message and transmits DM1 with SPN field = PGN of CAN message and FMI = 10 Recipient retains existing values. Recipient resets RC (rolling counter) to 0 Transmitter re-transmits CAN message requested by Recipient with RC set to 0.
Possible Cause:	1. Mismatched or un programmed VIN number in either Bosch ECU 2. Unterminated CAN network 3. Damaged CAN network 4. Poorly connected CAN network 5. Water Ingress
Service Action:	1. Connect to the machine via JCB Service Master and run the 'Vehicle Setup' tool. Ensure that the VIN number is displayed in Green and that the CAN Bus devices have paired successfully. 2. Check both can terminator resistors are placed correctly at either end of the CAN network (at base and platform control panels). Turn Ignition to OFF and remove Livelink Connector from Livelink ECU. Remove the CAN terminator at the base platform and then measure the resistance of CAN-L to CAN-H on the harness connector. This should measure 120 ohms.

© 2025 Enter your company name

	Measuring a value close to 0 ohms will indicate a short circuit on the CAN bus. To narrow down the fault location, replace the CAN terminator and then disconnect the CAN bus interconnect at -C32_TH / -C32_BH. Measure the resistance of the CAN bus on each connector, the one that reads low will be the section with the short circuit. If the original measurement was a high reading, then there is a break in the CAN bus wiring. Again, section up the CAN Bus network and complete continuity testing to isolate the faulty section. 3. Check the CAN bus wiring runs to check for damage to the harness, especially abrasions and pinching. Check there is no damage at any of the CAN device connectors (Interconnects and ECU's / Displays etc) 4. Ensure all interconnects and device connectors are fully inserted. 5. Ensure all interconnects and device connectors have no water ingress issues. 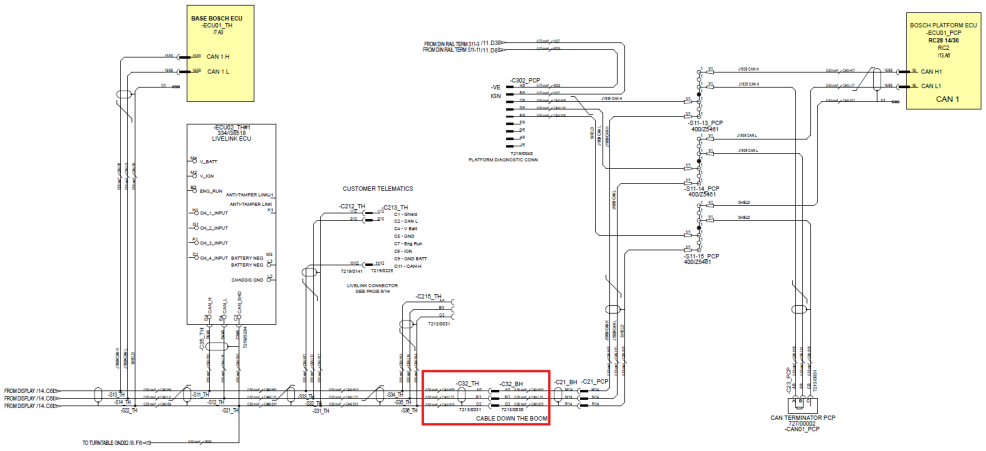

5.1.303 U1325-56

Error code:	U1325-56
ECU	Base ECU
Description:	CAN RC ERROR
Component:	ECU
Vehicle reaction:	Recipient ignores received CAN message and transmits DM1 with SPN field = PGN of CAN message and FMI = 10 Recipient retains existing values. Recipient resets RC (rolling counter) to 0 Transmitter re-transmits CAN message requested by Recipient with RC set to 0.

© 2025 Enter your company name

Possible Cause:	1. Mismatched or un programmed VIN number in either Bosch ECU 2. Unterminated CAN network 3. Damaged CAN network 4. Poorly connected CAN network 5. Water Ingress
Service Action:	1. Connect to the machine via JCB Service Master and run the 'Vehicle Setup' tool. Ensure that the VIN number is displayed in Green and that the CAN Bus devices have paired successfully. 2. Check both can terminator resistors are placed correctly at either end of the CAN network (at base and platform control panels). Turn Ignition to OFF and remove Livelink Connector from Livelink ECU. Remove the CAN terminator at the base platform and then measure the resistance of CAN-L to CAN-H on the harness connector. This should measure 120 ohms. Measuring a value close to 0 ohms will indicate a short circuit on the CAN bus. To narrow down the fault location, replace the CAN terminator and then disconnect the CAN bus interconnect at -C32_TH / -C32_BH. Measure the resistance of the CAN bus on each connector, the one that reads low will be the section with the short circuit. If the original measurement was a high reading, then there is a break in the CAN bus wiring. Again, section up the CAN Bus network and complete continuity testing to isolate the faulty section. 3. Check the CAN bus wiring runs to check for damage to the harness, especially abrasions and pinching. Check there is no damage at any of the CAN device connectors (Interconnects and ECU's / Displays etc) 4. Ensure all interconnects and device connectors are fully inserted. 5. Ensure all interconnects and device connectors have no water ingress issues. 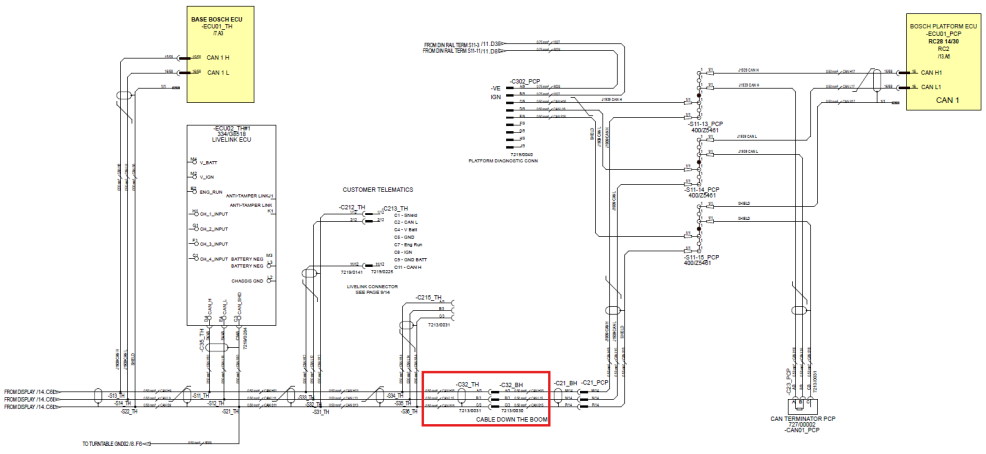

5.1.304 U1326-41

Error code:	**U1326-41**
ECU	Base ECU

© 2025 Enter your company name

Description:	CAN CHECK SUM ERROR
Component:	ECU
Vehicle reaction:	Recipient ignores received CAN message and transmits DM1 with SPN field = PGN of CAN message and FMI = 2 Recipient retains existing values. Recipient resets RC (rolling counter) to 0 Transmitter re-transmits CAN message requested by Recipient with RC set to 0.
Possible Cause:	1. Mismatch between transmitting and receiving message between ECU's
Service Action:	1. Connect to the machine via JCB Service Master and run the 'Vehicle Setup' tool. Ensure that the VIN number is displayed in Green and that the CAN Bus devices have paired successfully. 2. Check both can terminator resistors are placed correctly at either end of the CAN network (at base and platform control panels). Turn Ignition to OFF and remove Livelink Connector from Livelink ECU. Remove the CAN terminator at the base platform and then measure the resistance of CAN-L to CAN-H on the harness connector. This should measure 120 ohms. Measuring a value close to 0 ohms will indicate a short circuit on the CAN bus. To narrow down the fault location, replace the CAN terminator and then disconnect the CAN bus interconnect at -C32_TH / -C32_BH. Measure the resistance of the CAN bus on each connector, the one that reads low will be the section with the short circuit. If the original measurement was a high reading, then there is a break in the CAN bus wiring. Again, section up the CAN Bus network and complete continuity testing to isolate the faulty section. 3. Check the CAN bus wiring runs to check for damage to the harness, especially abrasions and pinching. Check there is no damage at any of the CAN device connectors (Interconnects and ECU's / Displays etc) 4. Ensure all interconnects and device connectors are fully inserted. 5. Ensure all interconnects and device connectors have no water ingress issues.

© 2025 Enter your company name

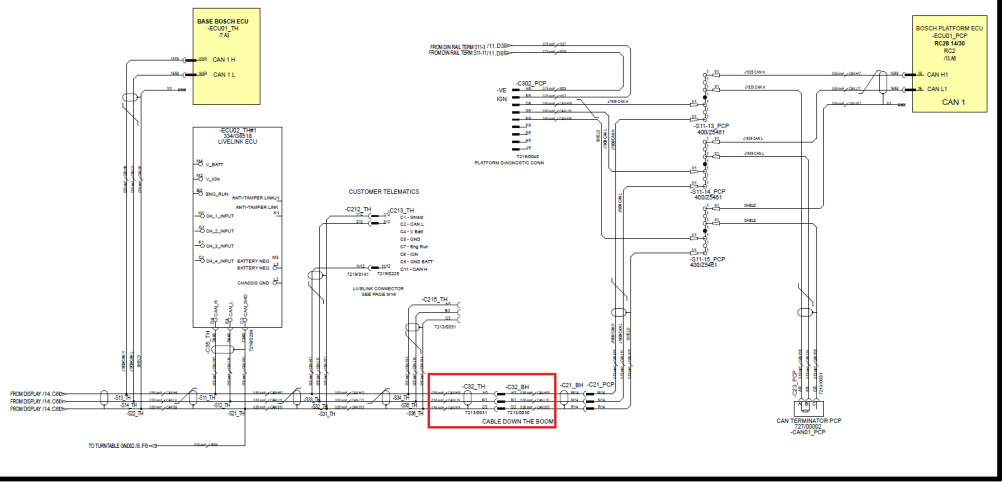

5.1.305 U1327-41

Error code:	U1327-41
ECU	Base ECU
Description:	CAN CHECK SUM ERROR
Component:	ECU
Vehicle reaction:	Recipient ignores received CAN message and transmits DM1 with SPN field = PGN of CAN message and FMI = 2 Recipient retains existing values. Recipient resets RC (rolling counter) to 0 Transmitter re-transmits CAN message requested by Recipient with RC set to 0.
Possible Cause:	1. Mismatch between transmitting and receiving message between ECU's
Service Action:	1. Connect to the machine via JCB Service Master and run the 'Vehicle Setup' tool. Ensure that the VIN number is displayed in Green and that the CAN Bus devices have paired successfully. 2. Check both can terminator resistors are placed correctly at either end of the CAN network (at base and platform control panels). Turn Ignition to OFF and remove Livelink Connector from Livelink ECU. Remove the CAN terminator at the base platform and then measure the resistance of CAN-L to CAN-H on the harness connector. This should measure 120 ohms. Measuring a value close to 0 ohms will indicate a short circuit on the CAN bus. To narrow down the fault location, replace the CAN terminator and then

© 2025 Enter your company name

	disconnect the CAN bus interconnect at -C32_TH / -C32_BH. Measure the resistance of the CAN bus on each connector, the one that reads low will be the section with the short circuit. If the original measurement was a high reading, then there is a break in the CAN bus wiring. Again, section up the CAN Bus network and complete continuity testing to isolate the faulty section. 3. Check the CAN bus wiring runs to check for damage to the harness, especially abrasions and pinching. Check there is no damage at any of the CAN device connectors (Interconnects and ECU's / Displays etc) 4. Ensure all interconnects and device connectors are fully inserted. 5. Ensure all interconnects and device connectors have no water ingress issues. 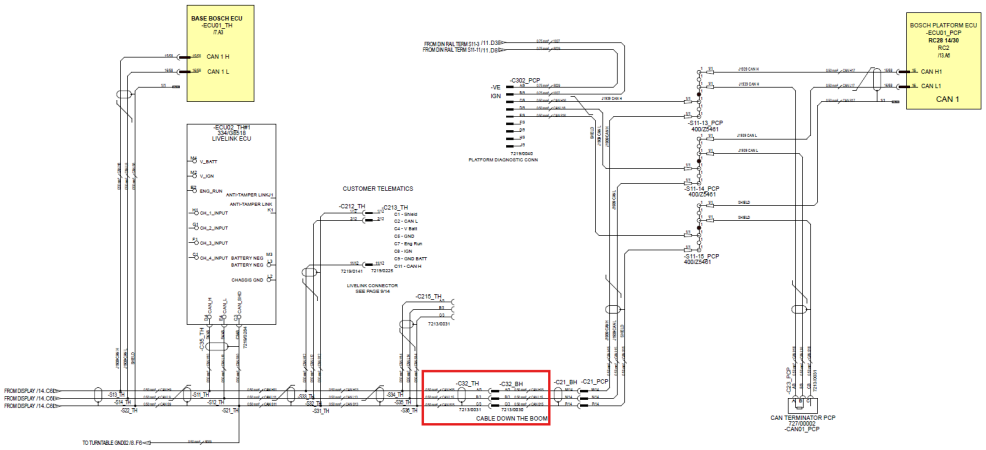

5.1.306 U1328-41

Error code:	U1328-41
ECU	Base ECU
Description:	CAN CHECK SUM ERROR
Component:	ECU
Vehicle reaction:	Recipient ignores received CAN message and transmits DM1 with SPN field = PGN of CAN message and FMI = 2 Recipient retains existing values. Recipient resets RC (rolling counter) to 0 Transmitter re-transmits CAN message requested by Recipient with RC set to 0.

© 2025 Enter your company name

Possible Cause:	1. Mismatch between transmitting and receiving message between ECU's
Service Action:	1. Connect to the machine via JCB Service Master and run the 'Vehicle Setup' tool. Ensure that the VIN number is displayed in Green and that the CAN Bus devices have paired successfully. 2. Check both can terminator resistors are placed correctly at either end of the CAN network (at base and platform control panels). Turn Ignition to OFF and remove Livelink Connector from Livelink ECU. Remove the CAN terminator at the base platform and then measure the resistance of CAN-L to CAN-H on the harness connector. This should measure 120 ohms. Measuring a value close to 0 ohms will indicate a short circuit on the CAN bus. To narrow down the fault location, replace the CAN terminator and then disconnect the CAN bus interconnect at -C32_TH / -C32_BH. Measure the resistance of the CAN bus on each connector, the one that reads low will be the section with the short circuit. If the original measurement was a high reading, then there is a break in the CAN bus wiring. Again, section up the CAN Bus network and complete continuity testing to isolate the faulty section. 3. Check the CAN bus wiring runs to check for damage to the harness, especially abrasions and pinching. Check there is no damage at any of the CAN device connectors (Interconnects and ECU's / Displays etc) 4. Ensure all interconnects and device connectors are fully inserted. 5. Ensure all interconnects and device connectors have no water ingress issues. 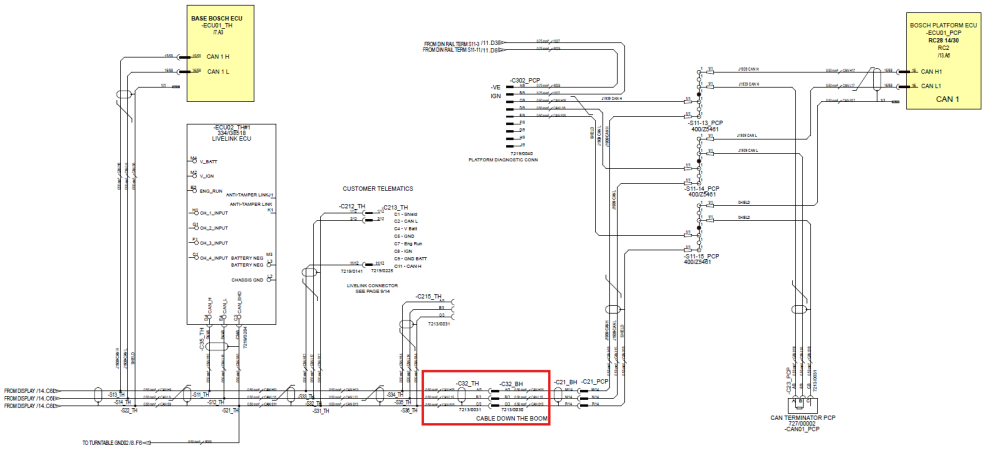

© 2025 Enter your company name

This page is intentionally left blank.
Remove this text from the manual
template if you want it completely blank.

General Sensor Fault Table

6 General Sensor Fault Table

6.1 General Sensor Fault Table

Step	Trouble	Action
1	Sensor supply voltage fault	Disconnect the sensor, check sensor voltage supply at the harness connector (see relevant sensor help file for pin numbers or refer to engine electrical schematic) If voltage supply is faulty, disconnect all other sensors in turn until the voltage supply returns. If sensor supply voltage is OK, proceed to Step 2
2	Sensor connection faulty	Check condition of sensor to harness connection, make sure the seals are in place. Check for signs of corrosion or contamination. Repair/replace as necessary. If no fault is found, proceed to Step 3.
3	Sensor failure	Check the sensor resistance (see relevant help file for values). If sensor is out of specification, replace. If no fault is found, proceed to Step 4
4	Wiring fault	Check the harness continuity, and machine and earth contacts. Repair/replace as necessary. If no fault is found, proceed to Step 5.
5	ECU fault	Disconnect the harness from the ECU and inspect. Check seals are in place, check for signs of corrosion and pin damage. If harness is damaged repair/replace as necessary. If ECU pins are damaged, replace ECU and Reflash, see section on ECU flashing. If no fault is found, raise a Tech web Help desk Call.

© 2025 Enter your company name

Software Flashing

7 Software Flashing

This section is to describe the method for updating software on the machine.

Always ensure the platform and base ecu's are updated together to ensure the versions match.

The display software should always be aligned to the correct bosch ecu software, please check before updating any files on a machine

7.1 Display Flashing

Overview

The display can be flashed and updated through USB.

Please ensure the display software being flashed is at a suitable revision to match the Bosch software.

There will need an additional lead 721/G1618



To flash the display through USB

1.Connect the additional lead 721/G1618 to the connector to the 4 way connector on the rear of the display panel.

2.Save software file onto a memory stick (FAT32 formatted)

© 2025 Enter your company name

3.Insert USB into the USB connection on additional lead

4.View display screen - at this point the screen is touch screen.



5.Use the yellow button first to remove any old parameters and software that is saved to the display

6.Select the software required to the flashed so it appears in the top file box (multiple software can be on the memory stick)

7.Press the green download button to update new software

8.wait for the software to complete its update and then remove memory stick and the display will reset

© 2025 Enter your company name



9.The machine VIN number will need to be updated through service-master tool

7.2 Bosch ECU Flashing

Flashing on the Bosch ECU's

Use the JCB Flashloader.

For information on the Flashloader tool, see JCB Servicemaster tools section

This instruction begins with the tool connected to the machine

Available ECU's on the machine

Available ECU’s are displayed (Base ECU at boot and run mode shown).

While flashing the new ECU,

© 2025 Enter your company name

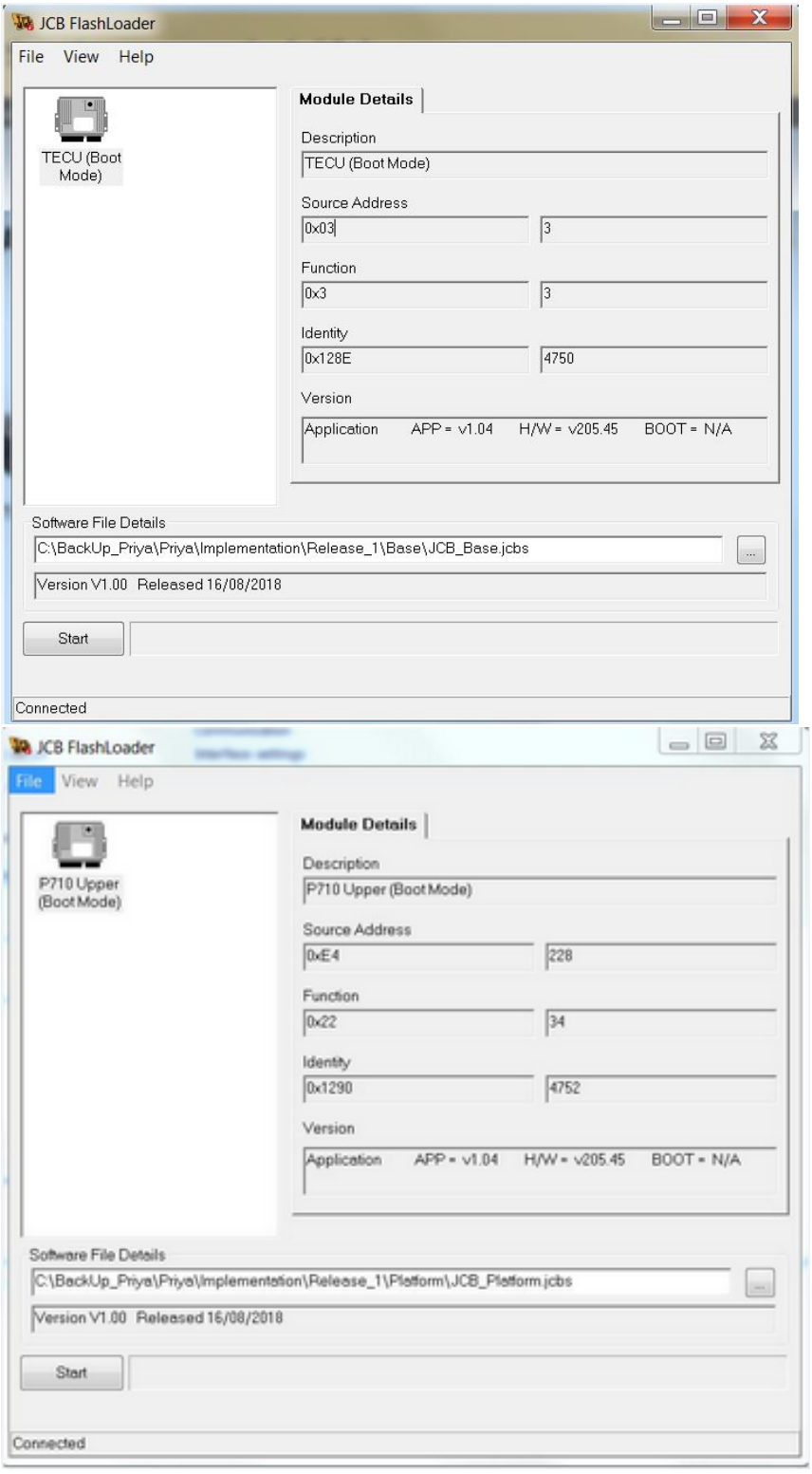

While flashing the Pre-programmed ECU,

© 2025 Enter your company name

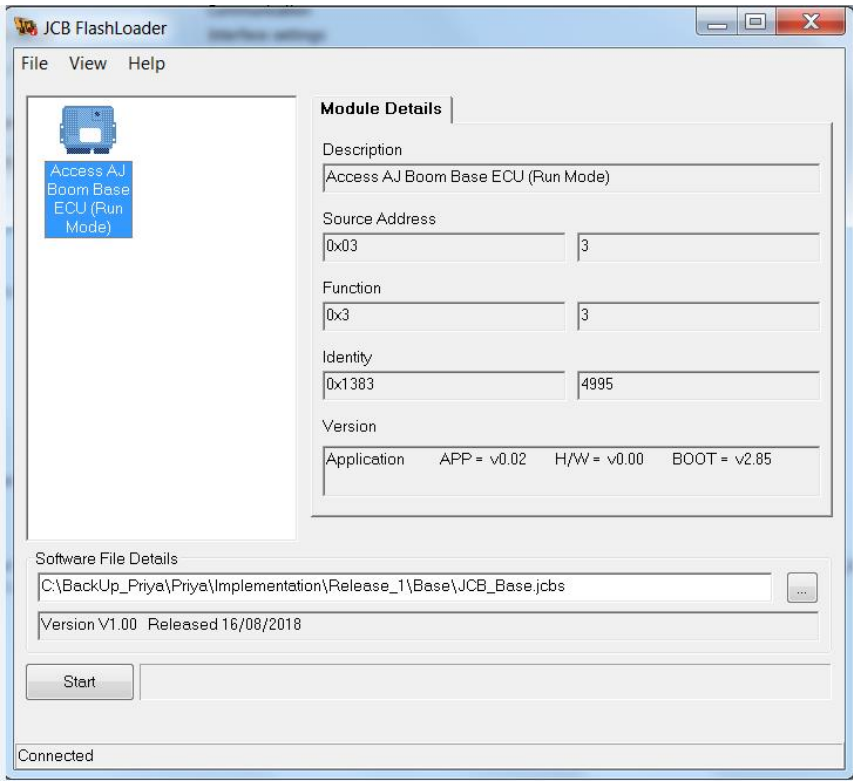

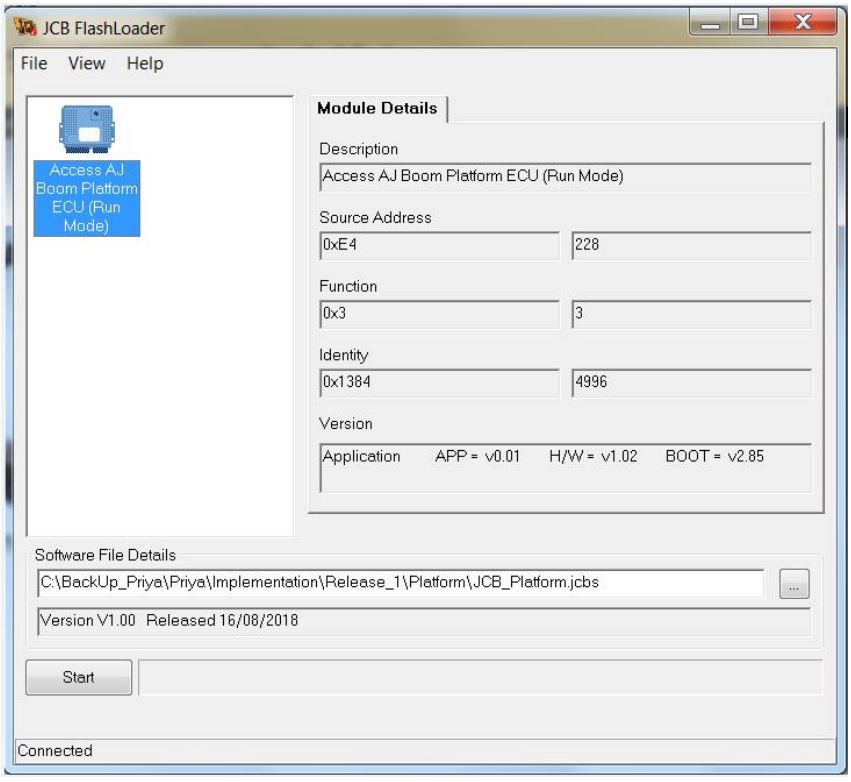

The Flashloader tool relies on the ‘source’ address (or hardware identity) to display ECU’s as thumbnail images. An ECU not recognized by the Flashloader Tool is displayed as ‘?’ - Unknown.

© 2025 Enter your company name

In this case take care to check the ECU' source address before attempting to program it with new software.

Flash Loader Tool bar

If you select one of ECU, the Flash loader gives the attribute values for specific selected ECU (after click on 'Flash Loader' tool in Service master)

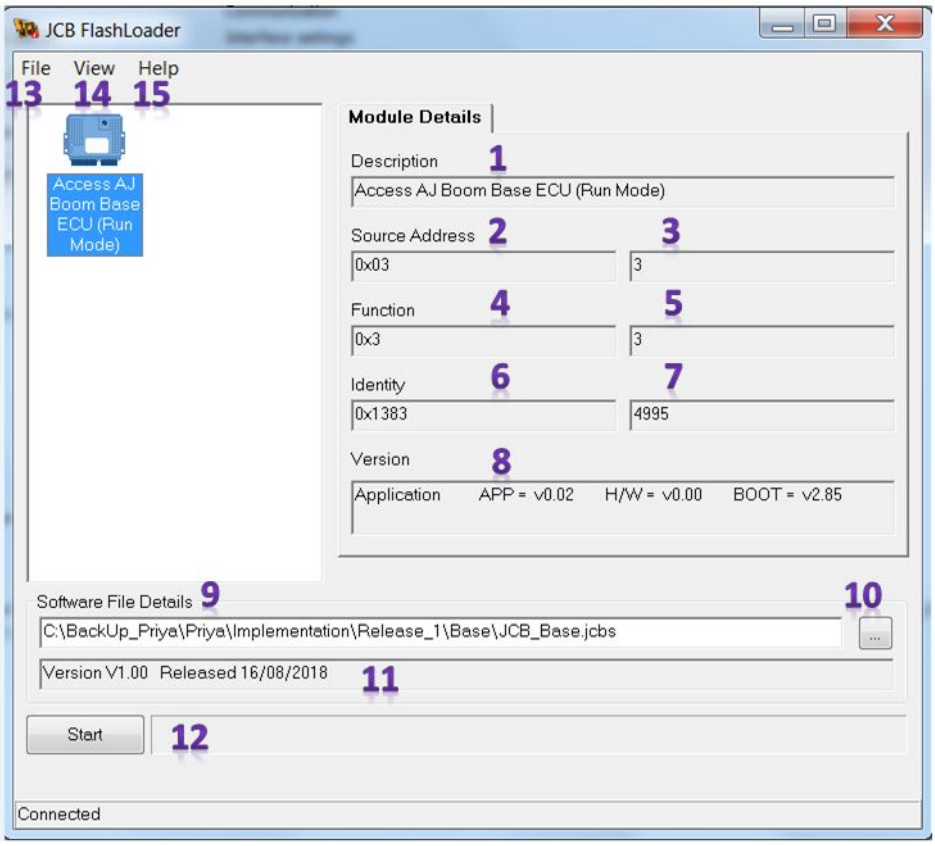

1	Description of the selected ECU
2	The J1939 source address for the ECU in Hexadecimal
3	The J1939 source address for the ECU in Decimal
4	The function of the ECU in Hexadecimal
5	The function of the ECU in Decimal
6	The identity of the ECU in Hexadecimal
7	The identity of the ECU in Decimal
8	The current version of software currently installed in the selected ECU.
9	The file location on the service laptop of the software that will be programmed if 'START' is selected – see note below
10	Click on (" ... ") to open a window to chose a different file location of the software files on the service laptop

© 2025 Enter your company name

11	The version of software that will be programmed from the service laptop if ‘START’ is selected
12	Click on this button to start programming the selected ECU with the listed software file
13	‘File’ – change the language of the Flashloader wording from the Preferences option
14	‘View’ > ‘Refresh’ to update the Flashloader display
15	‘Help’ > ‘User Guide’ displays this guide. ’Help’ > ‘About...’ displays the Flashloader Tool Version number.

Choosing the Required Software File

ECU Software files are stored within a Team center.

Both Turntable and platform software should be updated in pairs.

Flashing the ECU Software

Select the required ECU and choose the required software file name FOR THE CORRECT VEHICLE YOU ARE CURRENTLY UPDATING.

To reprogram the ECU with the file specified, press ‘Start’ and confirm your selection. The software file is sent over the CAN-Bus to the ECU.

Reprogramming ECU Software - Progress Bar

Once the software is being loaded a progress bar is shown.

Some ECU’s take several minutes to receive the software file.

If Reprogramming fails, check the correct file is selected. Switch the vehicle Ignition ‘Off’ and ‘On’ and re-attempt the process.

If necessary, restart the Service Laptop and close other windows.

If necessary, disconnect other ECU’s on the CAN-Bus in case they are affecting the data transmission.

Reprogramming Complete

A message box indicates when the upload is complete. The file has been successfully received by the ECU.

Switch the Ignition ‘Off’ and ‘On’.

© 2025 Enter your company name

It is not normally necessary to recalibrate sensors as this is not overwritten by these software files.

© 2025 Enter your company name

This page is intentionally left blank.
Remove this text from the manual
template if you want it completely blank.

Service Master Tools Help

8 Service Master Tools Help

Install software - ServiceMaster

Using JCB ServiceMaster

Using the DLA (Data Link Adapter)

Setup Tool

Diagnostic Tool

Flashloader Tool

8.1 Install Software - Service Master

General

The ServiceMaster Tools allows communication between the service laptop and the machine.

To use the 'ServiceMaster Tool', the operator must install the latest version software into service laptop.

Instructions for Install Software - ServiceMaster

Follow the below steps to install the software

Step 1: Visit the JCB Dealer Business Portal

Step 2: Enter your User and password details to login

© 2025 Enter your company name



Step 3: Click on 'ServiceMaster' icon

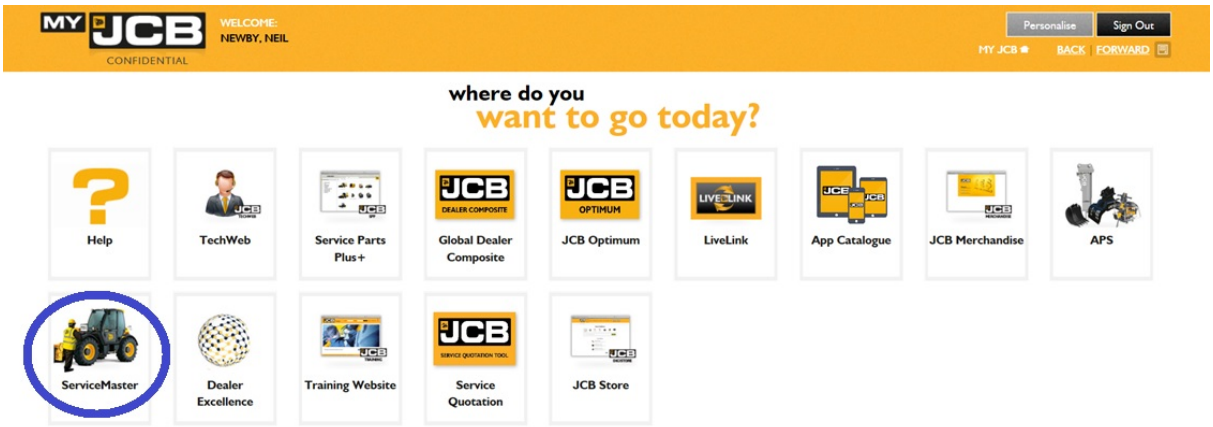

Step 4: Go to ServiceMaster tab --> SM Web Update

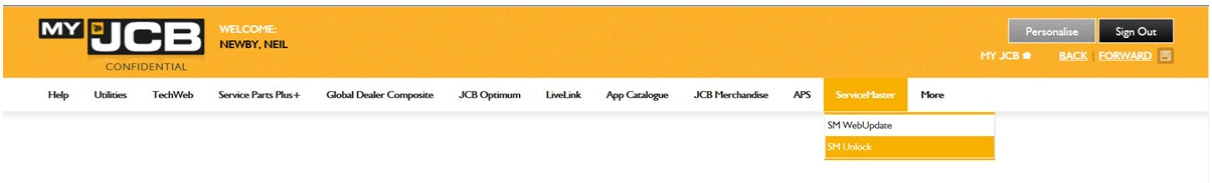

Step 5: Download or update the ServiceMaster tool software (check the text 'click here' to download)

© 2025 Enter your company name

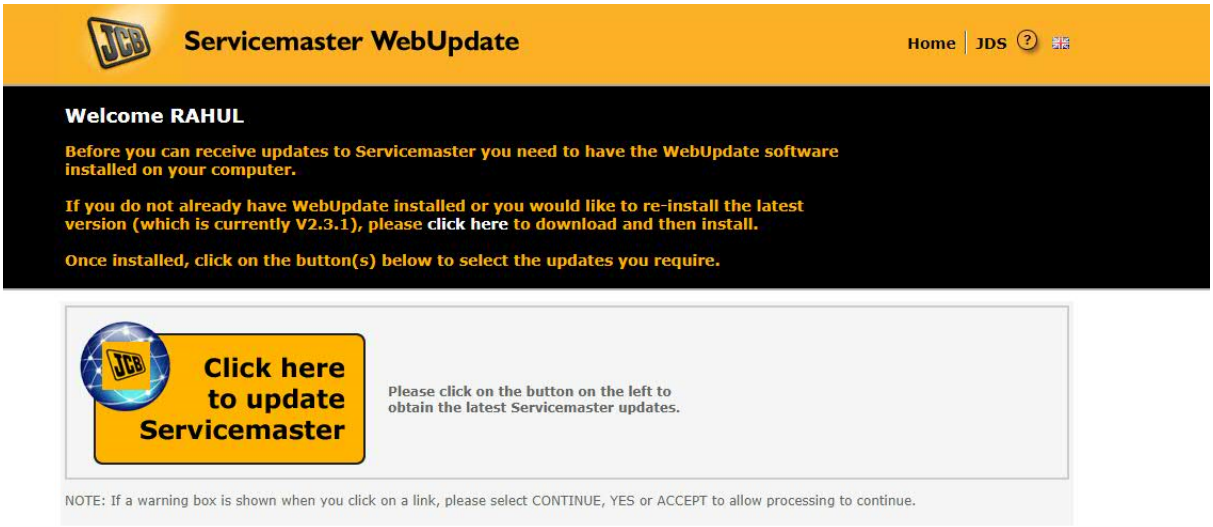

8.2 Using JCB Service Master

Overview

- The ServiceMaster Tools allows communication between the service laptop and the machine.
- A 'Data Link Adapter (DLA)' connects the computer USB Port to the machine Can-Bus through the Diagnostic Connector.

Fault Codes:

- Each ECU can generate a fault code if it detects the behaviour of an input or output is not as expected. Fault codes are transmitted by each ECU over the CanBus and stored on the DECU for future reference. View a complete list of error codes.
- The states of ECU inputs (switches and sensors) and outputs (solenoids, LED's etc) are broadcaster on the Can Bus. These values can be monitored using the Diagnostic Tool.
- If a switch is 'hardwired' directly to a component (e.g. the horn), rather than being wired to an ECU, then there is no means of monitoring its state on the CanBus using the Diagnostic Tool.
- Information Pages detail many ECU inputs and outputs.
- The Flashloader Tool is used to program ECU's with new software, sending information to the ECU over the Can Bus.

© 2025 Enter your company name

8.3 Using DLA (Data Link Adapter)

Overview

The DLA (Data Link Adapter) allows Can-Bus communication between a service laptop and the Machine ECU's through the Diagnostic Socket.

The DLA must be installed on the Laptop before it can be used.

Note: Some computers install the DLA on only one USB port. In this case, if the DLA is connected to a different USB port then no communication can be made with the Machine.

Installation Procedure - DLA Drives

Follow the below steps to install the drives

Step 1: After ServiceMaster software install into the service laptop, Open 'ServiceMaster' tool link (shortcut should be available at desktop)

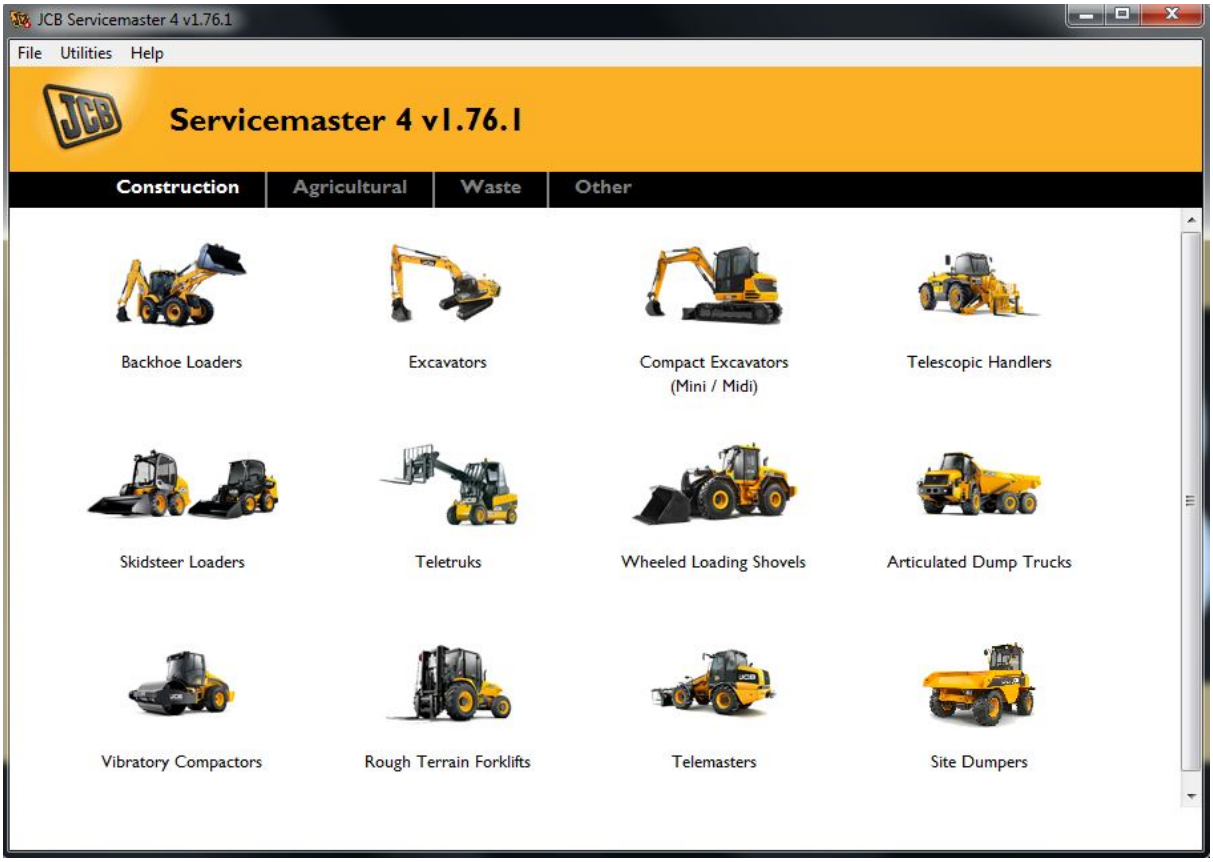

Step 2: Go to Other --> General

© 2025 Enter your company name

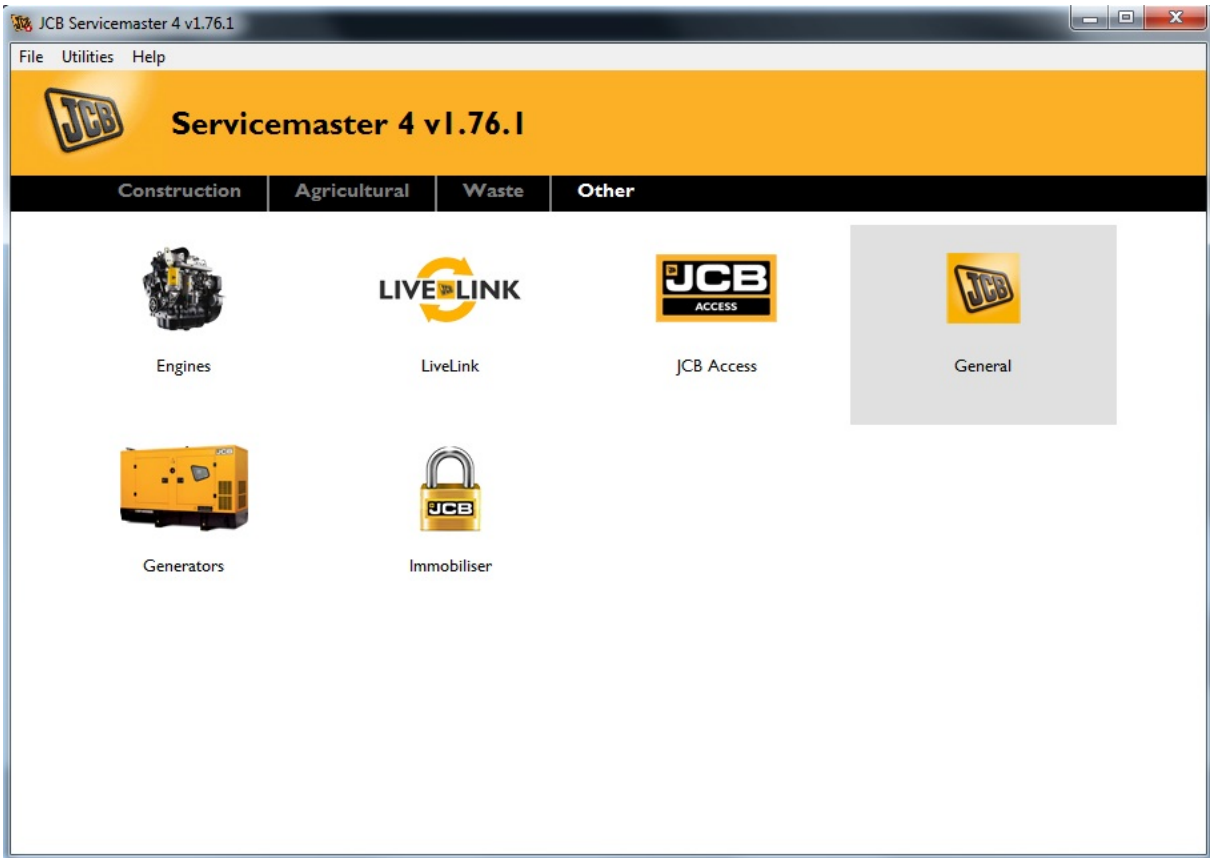

Step 3: Go to DLA

© 2025 Enter your company name

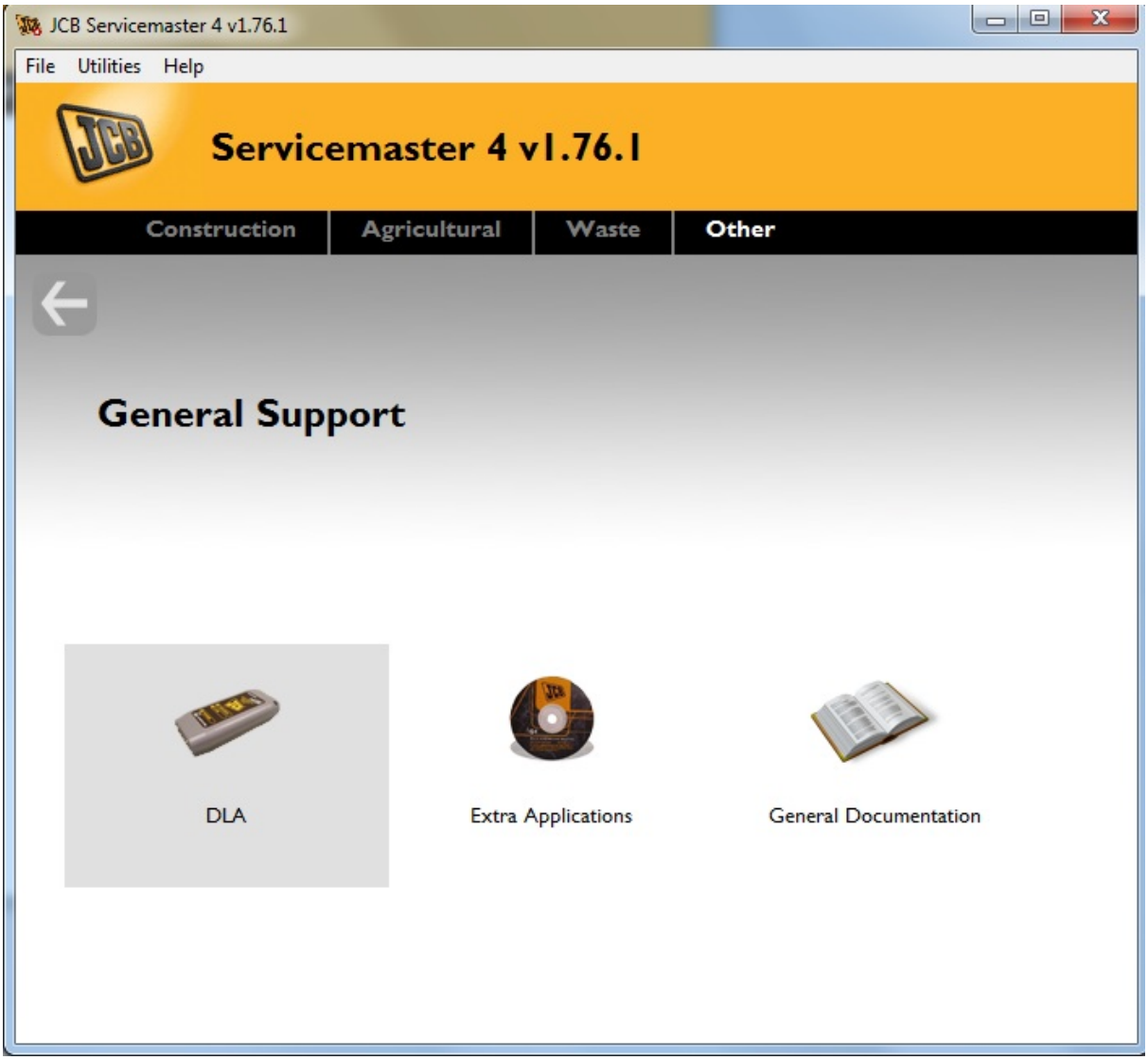

Step 4: Go to V1.7 USB DLA Win 7

© 2025 Enter your company name

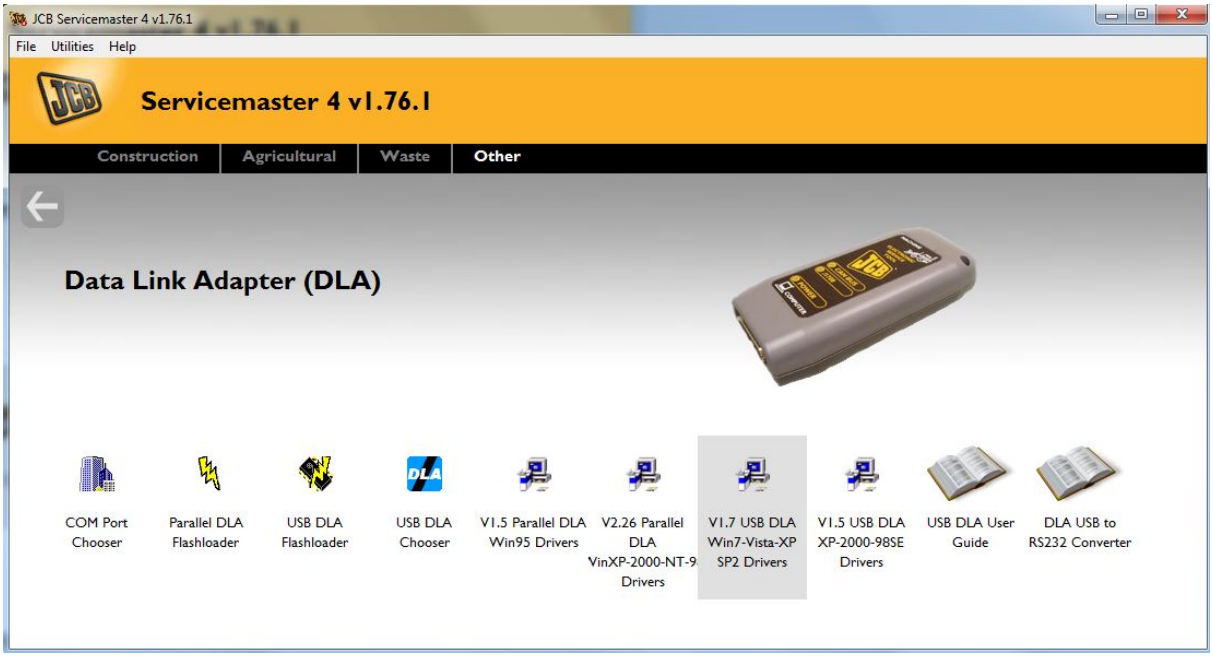

DLA Connections and Parts

Data Link Adapter should connect between service laptop and machine as shown below.

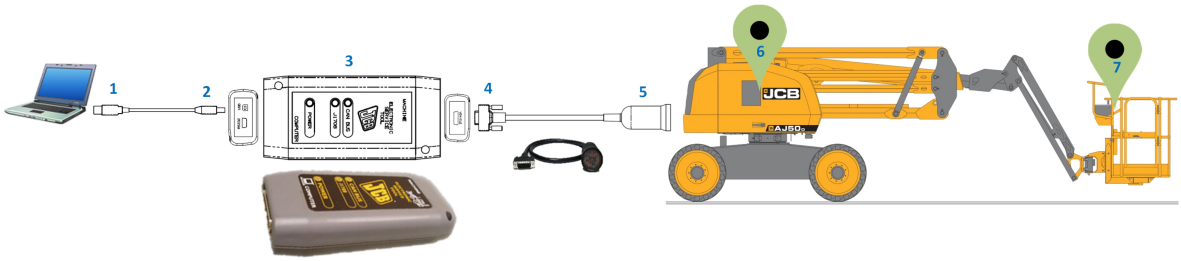

Parts	Description
1	To PC / Laptop USB
2	USB port at DLA
3	DLA
4	15 way D type connector at DLA
5	Deutsch 9 way 1939SE connector
6	Diagnostic connector location at Base control Panel
7	Diagnostic connector location at Platform control Panel

Machine has Diagnostic connectors in two locations

© 2025 Enter your company name

1. Base control panel

2. Platform control panel

8.4 Diagnostic Tool

Overview

If sensors and switches are wired to one of the Machine ECU's then their values or states are generally sent over the CAN Bus.

The Diagnostic Tool monitors information available on the CAN Bus to display the value detected by the ECU. The DLA must be used, connecting to the CAN Bus through the Machine Diagnostic Sockets.

If a switch is 'hardwired' directly to a component, rather than being wired to an ECU, then there is no means of monitoring its state on the CAN Bus using the Diagnostic Tool.

The Diagnostic Tool can also be used to monitor activity of ECU's from their message rates.

If an ECU has a message rate of '-' then it is likely there is an ECU Power fault or a CAN Bus fault.

Note: With multiple Diagnostic Screens open, the computer can be reading so much tractor information that the Diagnostic Tool response time is reduced.

To use the Diagnostic Tool

1.Connect a 'USB DLA' between the computer's USB port and the Machine Diagnostic connector

2.Switch the Machine Ignition 'On'.

3.Run the 'AJ Series Diagnostic Tool' program from ServiceMaster.

4.Click the Green 'Start' button at the top of the Diagnostic Screen (highlighted below).

5.Use the links across the top of the screen to view information menus. Select the required menu from the left hand column.

6.If no communication occurs:

- Check you have clicked the Green 'Start' button.
- Check the Ignition is 'On' and there is not a Machine power fault.
- Check if ECU's are functioning using the Can bus statistic page.

© 2025 Enter your company name

Refer to the notes on using the DLA.

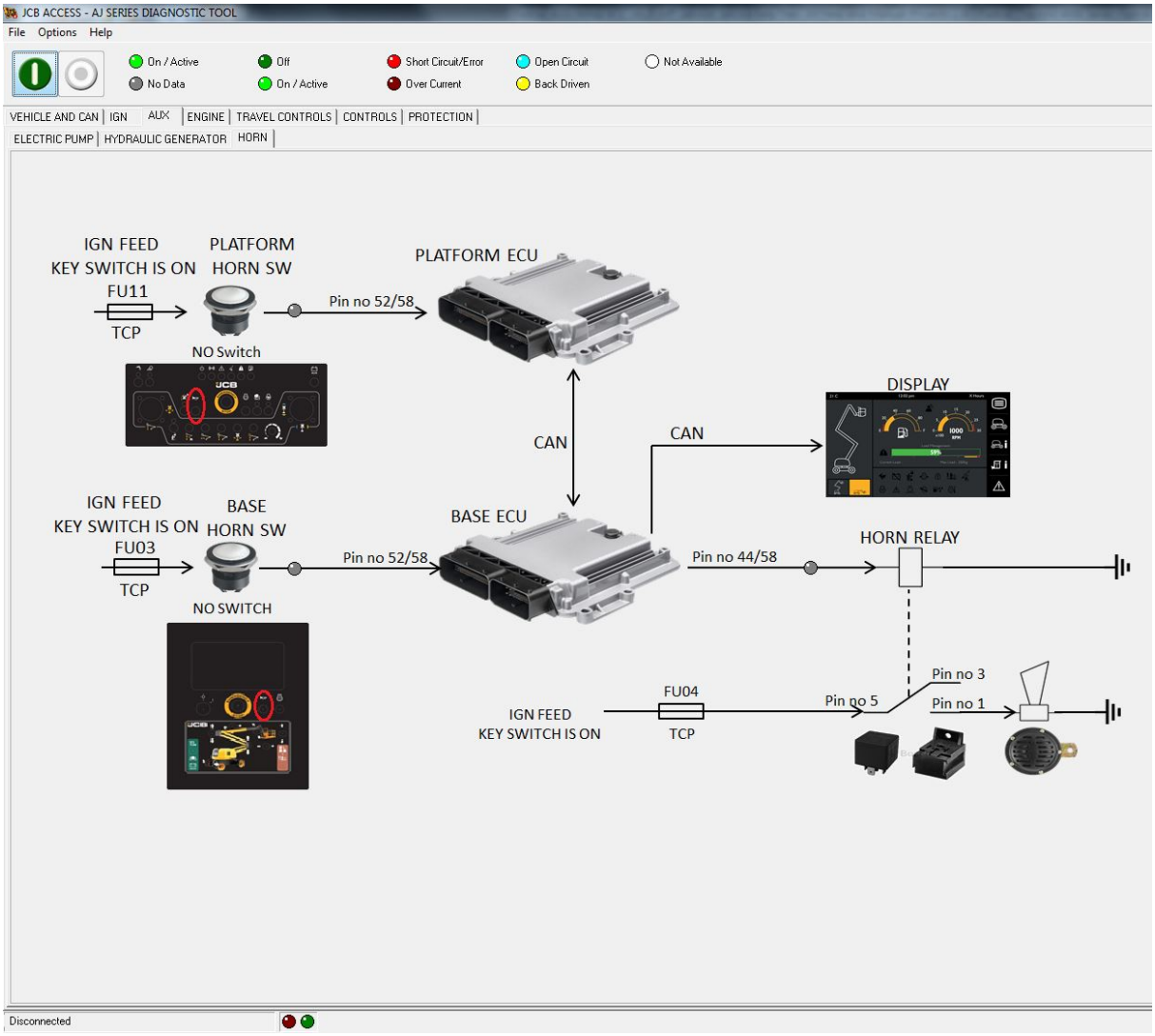

8.5 Flashloader Tool

Overview

The ServiceMaster Flashloader program is used to load software into the Electronic Control Units (ECU's) on JCB machines.

During the process, the Vehicle Ignition should remain 'On' and the Laptop should not be disconnected or allowed to enter 'Standby'. Close other programs running on the laptop.

This tool can not be used for flashing display ECU's.

Flashloader

Check the service machine has installed the ServiceMaster software and DLA drives.

© 2025 Enter your company name

Connect the Data Link Adapter (DLA) USB port to service laptop and Data Link Adapter (DLA) diagnostic connector to machine (see DLA connections and parts)

Follow the below steps for Flash loader tool

Step 1: Open ServiceMaster --> Others

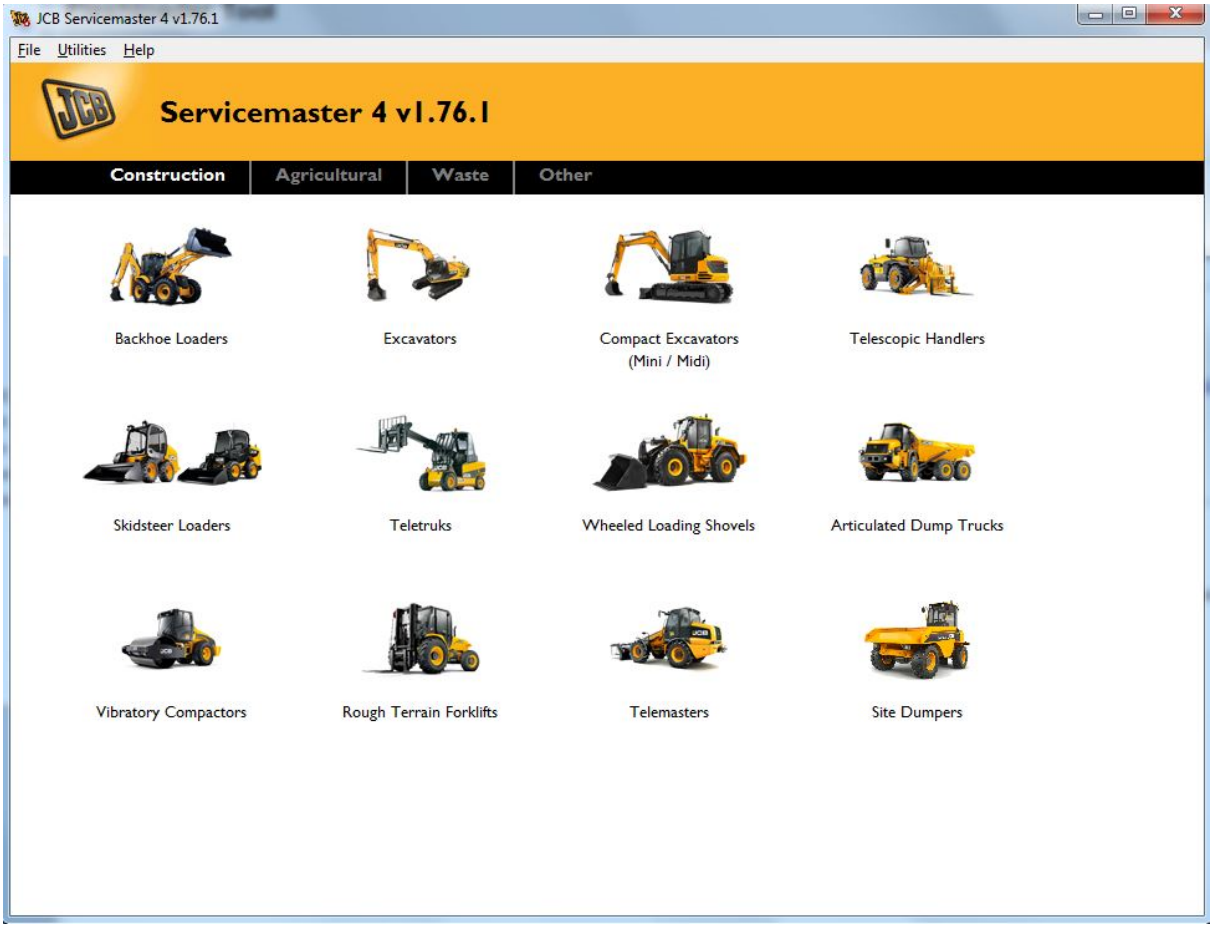

Step 2: Go to Others --> JCB Access

© 2025 Enter your company name



Step 3: Go to Articulated boom

© 2025 Enter your company name



Step 4: Click on Flashloader icon (single click only)

© 2025 Enter your company name

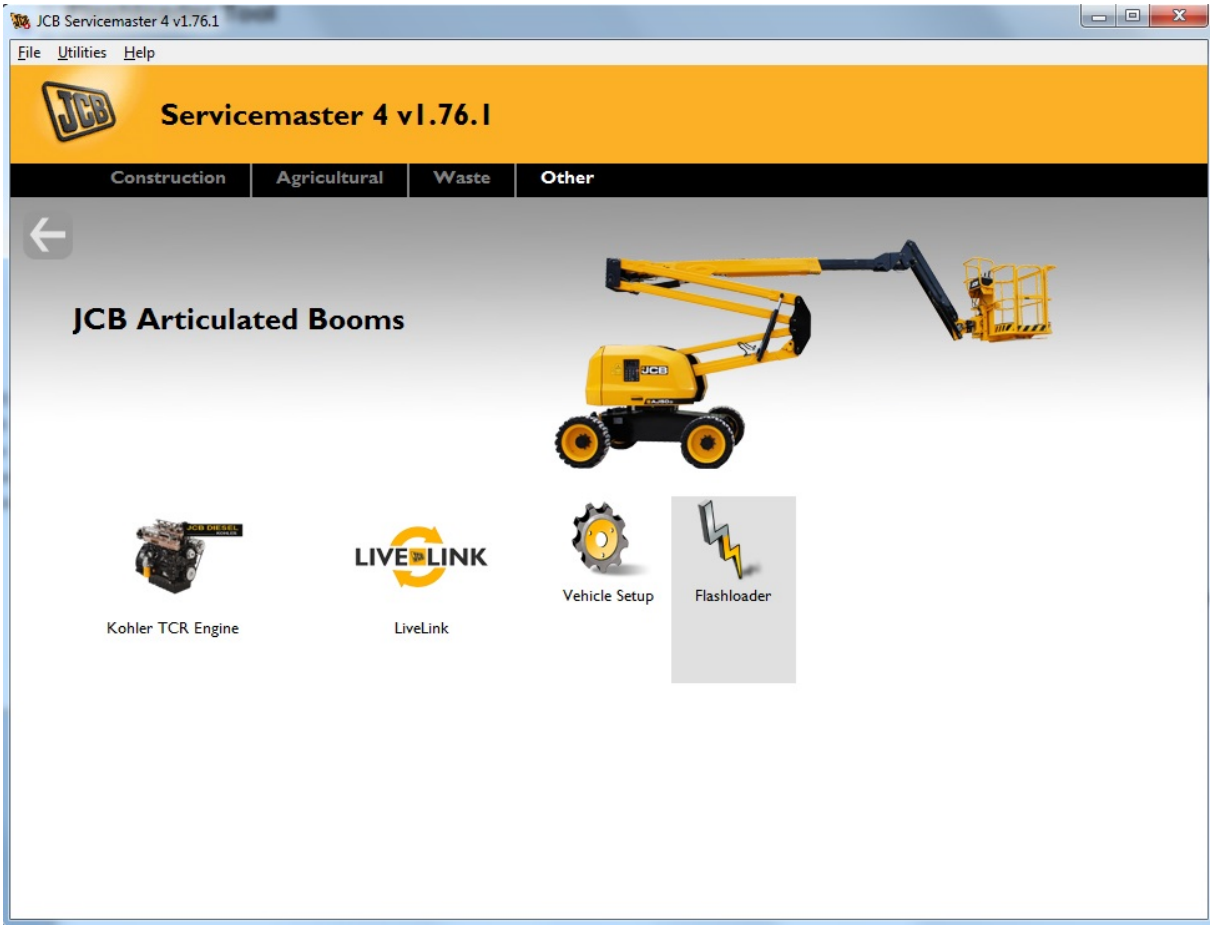

Flashing the ECU

Flashloader tool searches the ECU's connected in the machine

© 2025 Enter your company name

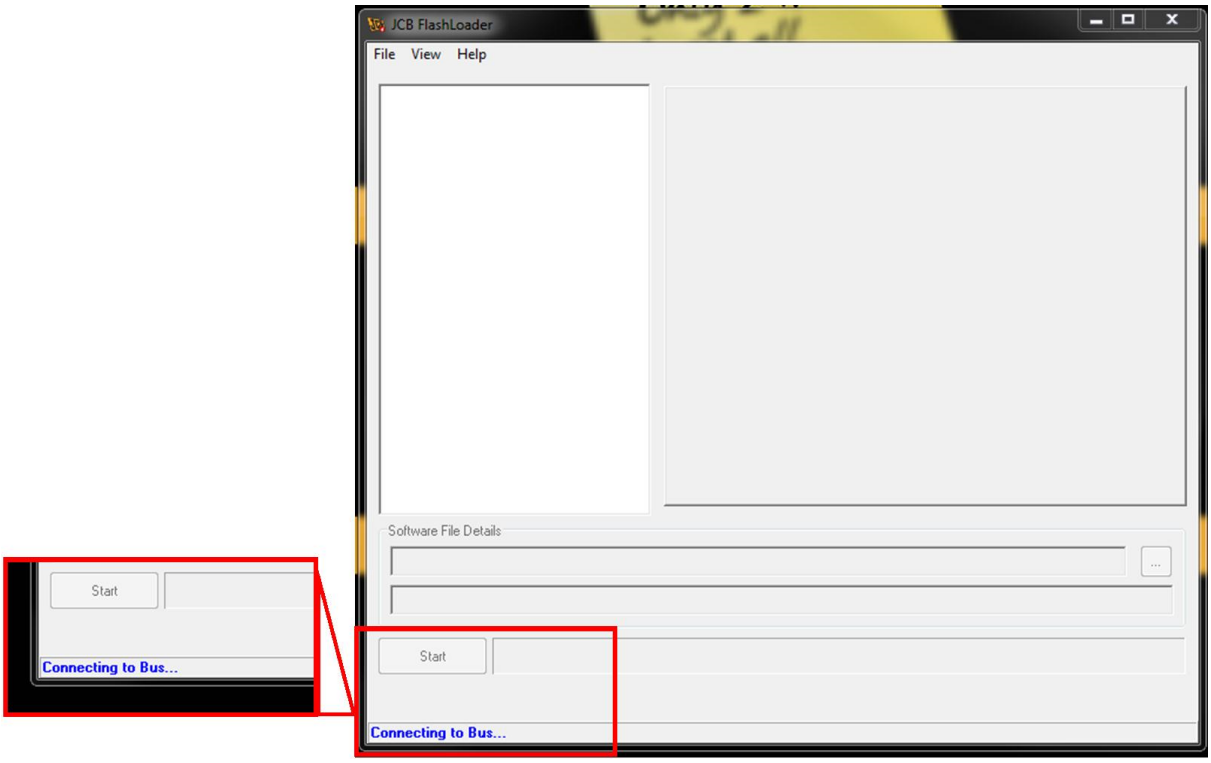

Communication Faults

“Unable to connect to the DLA … ”

© 2025 Enter your company name

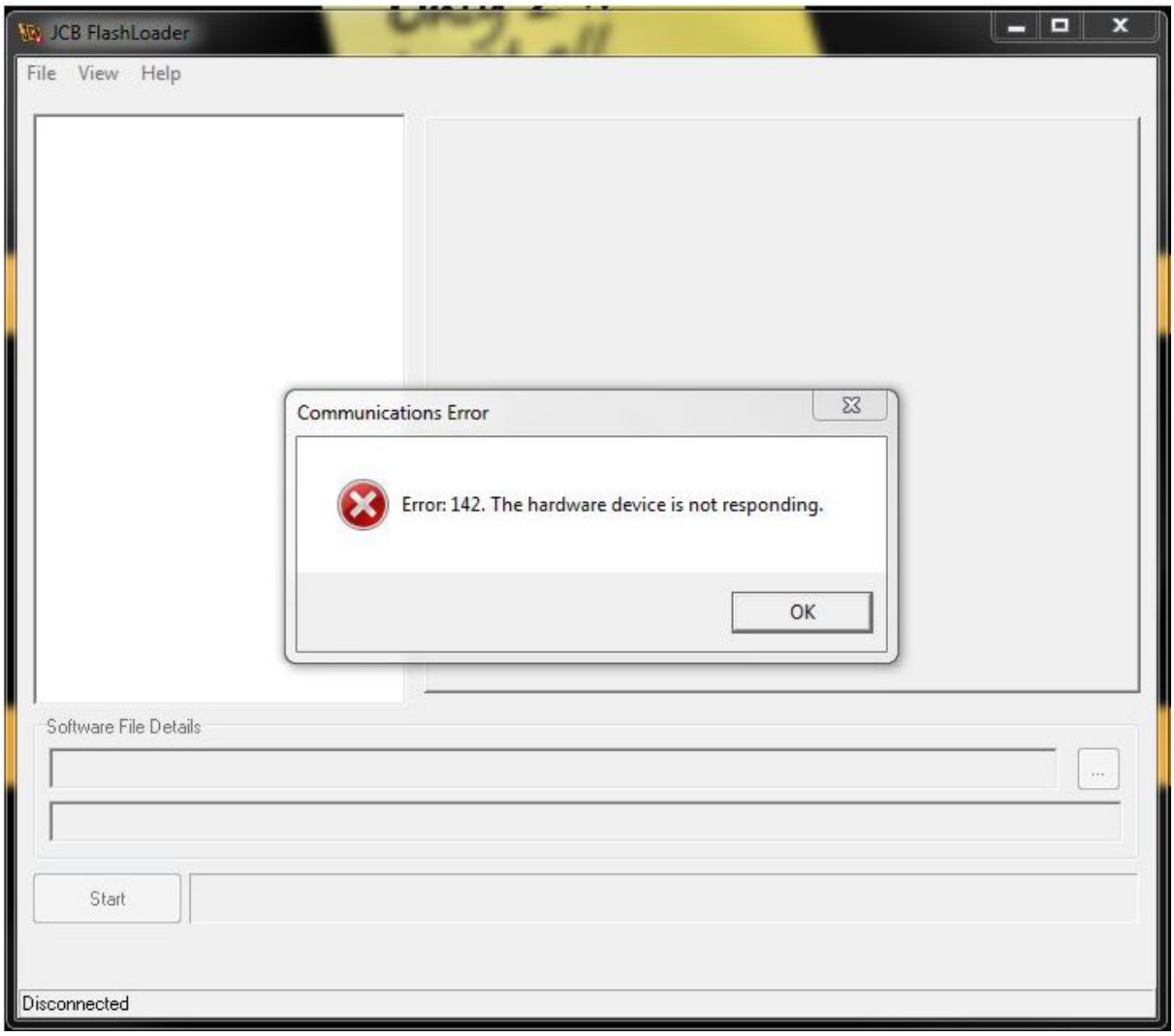

This screen is shown if:

- The Vehicle Ignition is not ‘On’
- The DLA is not connected to the laptop/machine
- The DLA is not configured for the USB port which it is plugged into
- The wrong type of DLA is configured Selecting the DLA
- The DLA does not show a red ‘power’ light – possibly due to a supply / earth fault with the Diagnostic Socket (fuse blown).

  “No modules found …”
- The machine is not fitted with any programmable ECU’s
- There is a supply fault to the ECU’s. fuse fault/ Primary fuse fault / wiring fault

© 2025 Enter your company name

- The Diagnostic socket is not connected to the CAN-Bus.
- There are no ECU’s disconnected from the CAN-Bus.
- There is a CAN-Bus fault – Refer to 4000 Help Pages (CAN-Bus Tests)

© 2025 Enter your company name